UNITED STATES PATENT AND TRADEMARK OFFICE

Commissioner for Patents
United States Patent and Trademark Office
P.O. Box 1450
Alexandria, VA 22313-1450
www.uspto.gov

DAVID W. CARRITHERS
CARRITHERS LAW OFFICE, PLLC
ONE PARAGON CENTRE
6060 DUTCHMAN'S LANE, SUITE 140
LOUISVILLE, KY 40205

COPY MAILED

JUN 20 2008

OFFICE OF PETITIONS

In re Application of	:	
Zhiqiang Zhang, et al.	:	
Application No. 10/809,199	:	DECISION ON PETITION
Filed: March 25, 2004	:	
Attorney Docket No. AF207/2003	:	

This is a decision on the petition under the unintentional provisions of 37 CFR 1.137(b), filed November 30, 2007, to revive the above-identified application.

The petition is **GRANTED**.

The application became abandoned for failure to reply in a timely manner to the non-final Office action mailed, May 17, 2007, which set a shortened statutory period for reply of three (3) months. No extensions of time under the provisions of 37 CFR 1.136(a) were obtained. Accordingly, the application became abandoned on August 18, 2007.

The petition satisfies the requirements of 37 CFR 1.137(b) in that petitioner has supplied (1) the reply in the form of an amendment, (2) the petition fee of $1540, (3) a proper statement of unintentional delay, and (4) a terminal disclaimer and fee as required by 37 CFR 1.137(d).

Telephone inquiries concerning this decision should be directed to undersigned at (571) 272-1642.

This application is being referred to Technology Center AU 1796 for appropriate action by the Examiner in the normal course of business on the reply received November 30, 2007.

April M. Wise
Petitions Examiner
Office of Petitions

UNITED STATES PATENT AND TRADEMARK OFFICE

Commissioner for Patents
United States Patent and Trademark Office
P.O. Box 1450
Alexandria, VA 22313-1450
www.uspto.gov

QUALCOMM INCORPORATED
5775 MOREHOUSE DRIVE
SAN DIEGO, CA 92121

COPY MAILED
SEP 0 8 2006
OFFICE OF PETITIONS

In re Application of Roberto Padovani et al Application No. 10/809,213 Filed: March 25, 2004 Attorney Docket No. PA466C2	DECISION GRANTING PETITION UNDER 37 CFR 1.313(c)(2)

This is a decision on the petition, filed September 7, 2006, under 37 CFR 1.313(c)(2) to withdraw the above-identified application from issue after payment of the issue fee.

The petition is **GRANTED**.

The above-identified application is withdrawn from issue for consideration of a submission under 37 CFR 1.114 (request for continued examination). See 37 CFR 1.313(c)(2).

Petitioner is advised that the issue fee paid on August 8, 2006 in the above-identified application cannot be refunded. If, however, the above-identified application is again allowed, petitioner may request that it be applied towards the issue fee required by the new Notice of Allowance.[1]

Telephone inquiries should be directed to the undersigned at (571) 272-3218.

This matter is being referred to Technology Center AU 2616 for processing of the request for continued examination under 37 CFR 1.114 and for consideration of the concurrently filed amendment.

Frances Hicks
Petitions Examiner
Office of Petitions

C:\Documents and Settings\FHicks\My Documents\470\Sept9\809213.wpd

---

[1] *The request to apply the issue fee to the new Notice may be satisfied by completing and returning the new Part B – Fee(s) Transmittal Form (along with any balance due at the time of submission). Petitioner is advised that the Issue Fee Transmittal Form must be completed and timely submitted to avoid abandonment.*

UNITED STATES PATENT AND TRADEMARK OFFICE

Commissioner for Patents
United States Patent and Trademark Office
P.O. Box 1450
Alexandria, VA 22313-1450
www.uspto.gov

COPY MAILED

AUG 23 2007

OFFICE OF PETITIONS

SEYFARTH SHAW LLP
131 S. DEARBORN ST., SUITE2400
CHICAGO, IL 60603-5803

In re Application of
Satoshi Narita, et al.
Application No. 10/809,224
Filed: March 25, 2004
Attorney Docket No. TJK/455

ON PETITION

This is a decision in response to the petition, filed April 16, 2007, to revive the above-identified application under the provisions of 37 CFR 1.137(b).

The petition is **GRANTED**.

The application became abandoned for a failure to reply in a timely manner to a non-final Office action mailed September 20, 2005. A Notice of Abandonment was mailed on April 10, 2006. On April 16, 2007, the present petition was filed.

The petition satisfies the conditions for revival pursuant to the provisions of 37 CFR 1.137(b) in that petitioner has supplied (1) the reply in the form of an amendment; (2) the petition fee of $1,500; and (3) an adequate statement of unintentional delay.

The application is being referred to Technology Center AU 2861 for appropriate action by the Examiner in the normal course of business on the reply received April 16, 2007.

Telephone inquiries concerning this decision should be directed to the undersigned at (571) 272-3204. Inquiries relating to further prosecution should be directed to the Technology Center.

Sherry D. Brinkley
Petitions Examiner
Office of Petitions

UNITED STATES PATENT AND TRADEMARK OFFICE

UNITED STATES DEPARTMENT OF COMMERCE
United States Patent and Trademark Office
Address: COMMISSIONER FOR PATENTS
P.O. Box 1450
Alexandria, Virginia 22313-1450
www.uspto.gov

FROMMER LAWRENCE & HAUG LLP
745 Fifth Avenue
New York, NY 10151

Mail Date: 05/13/2010

Applicant	: Hiroshi Kyusojin	: DECISION ON REQUEST FOR
Patent Number	: 7639743	: RECALCULATION of PATENT
Issue Date	: 12/29/2009	: TERM ADJUSTMENT IN VIEW
Application No	: 10/809,227	: OF WYETH AND NOTICE OF INTENT TO
Filed	: 03/25/2004	: ISSUE CERTIFICATE OF CORRECTION
		:

The Request for Recalculation is **GRANTED** to the extent indicated.

The patent term adjustment has been determined to be **1113** days. The USPTO will *sua sponte* issue a certificate of correction reflecting the amount of PTA days determined by the recalculation.

Prior to the issuance of the certificate of correction, the USPTO will afford patentee an opportunity to be heard and request reconsideration. Accordingly, patentee has **one month or thirty (30) days**, whichever is longer, to file a request for reconsideration of this patent term adjustment calculation. See 35 U.S.C. 154(b)(3)(B)(ii) and 37 CFR 1.322(a)(4). No extensions of time will be granted under 37 CFR 1.136.

Patentee should use document code PET.OP if electronically filing a request for reconsideration of this patent term adjustment calculation. The patentee must also include the information required by 37 CFR 1.705(b)(2) and the fee required by 37 CFR 1.18(e). If patentee does not file a timely request for reconsideration of this patent term adjustment calculation including the information required by 37 CFR 1.705(b)(2) and the fee required by 37 CFR 1.18(e), the USPTO will issue a certificate of correction reflecting the PTA determination noted above.

Patentee should be aware that in order to preserve the right to review in the United States District Court for the District of Columbia of the USPTO patent term adjustment determination, patentee must ensure that he or she also take the steps required under 35 U.S.C. 154(b)(4)(A) in a timely manner. Nothing in the request for recalculation should be construed as providing an alternative time frame for commencing a civil action under 35 U.S.C. 154(b)(4)(A).

Any questions concerning this decision should be directed to the Office of Patent Legal Administration at 571-272-7702.

UNITED STATES PATENT AND TRADEMARK OFFICE

COMMISSIONER FOR PATENTS
UNITED STATES PATENT AND TRADEMARK OFFICE
P.O. BOX 1450
ALEXANDRIA, VA 22313-1450
www.uspto.gov

STANDLEY LAW GROUP LLP
495 METRO PLACE SOUTH
SUITE 210
DUBLIN, OH 43017

COPY MAILED

JUN 21 2006

OFFICE OF PETITIONS

In re Application of :
David E. Guza :
Application No. 10/809,228 : DECISION ON PETITION
Filed: March 25, 2004 : UNDER 37 CFR 1.78(a)(6)
Attorney Docket No. GUZ 1333-003B :

This is a decision on the petition under 37 CFR 1.78(a)(6), filed March 29, 2006, to accept an unintentionally delayed claim under 35 U.S.C. § 119(e) for the benefit of priority to a prior-filed provisional application.

The petition is **DISMISSED.**

A petition under 37 CFR 1.78(a)(6) is only applicable to those applications filed on or after November 29, 2000. Further, the petition is appropriate only after expiration of the period specified in 37 CFR 1.78(a)(5)(ii) and must be filed during the pendency of the nonprovisional application. In addition, the petition must be accompanied by:

(1) the reference required by 35 U.S.C. § 119(e) and 37 CFR 1.78(a)(5)(i) to the prior-filed application, unless previously submitted;
(2) the surcharge set forth in § 1.17(t); and
(3) a statement that the entire delay between the date the claim was due under 37 CFR 1.78(a)(5)(ii) and the date the claim was filed was unintentional. The Director may require additional information where there is a question whether the delay was unintentional.

This pending nonprovisional application was filed on March 25, 2004, within twelve months of the filing date of the prior-filed provisional application, Application No. 60/457,526, which was filed on March 25, 2003, and for which priority is claimed. A reference to the prior-filed provisional application has been included in an amendment to the first sentence of the specification following the title.

However, the amendment is not acceptable as drafted since it improperly incorporates by reference the prior-filed application. An incorporation by reference statement added after an application's filing date is not effective because no new matter can be added to an application after its filing date (*see* 35 U.S.C. § 132(a)). If an incorporation by reference statement is included in an amendment to the specification to add a benefit claim under 35 U.S.C. § 120 after

the filing date of the application, the amendment would not be proper. When a benefit claim under 35 U.S.C. § 120 is submitted after the filing of an application, the reference to the prior application cannot include an incorporation by reference statement of the prior application. *See* Dart Industries v. Banner, 636 F.2d 684, 207 USPQ 273 (C.A.D.C. 1980). *Note* MPEP §§ 201.06(c) and 608.04(b).

Accordingly, before the petition under 37 CFR 1.78(a)(6) can be granted, a renewed petition under 37 CFR 1.78(a)(6) and either an Application Data Sheet or a substitute amendment (complying with 37 CFR 1.121 and 37 CFR 1.76(b)(5)) deleting the incorporation by reference statement, are required.

Further correspondence with respect to this matter should be addressed as follows:

By mail: Mail Stop PETITIONS
Commissioner for Patents
Post Office Box 1450
Alexandria, VA 22313-1450

By hand: Customer Service Window
Mail Stop Petitions
Randolph Building
401 Dulany Street
Alexandria, VA 22314

By fax: (571) 273-8300
ATTN: Office of Petitions

Any questions concerning this matter may be directed to Sherry D. Brinkley at (571) 272-3204.

Sherry D. Brinkley
Petitions Examiner
Office of Petitions

Karen O. Creasy
Petitions Examiner
Office of Petitions

UNITED STATES PATENT AND TRADEMARK OFFICE

Commissioner for Patents
United States Patent and Trademark Office
P.O. Box 1450
Alexandria, VA 22313-1450
www.uspto.gov

COPY MAILED

NOV 2 2 2006

OFFICE OF PETITIONS

STANDLEY LAW GROUP LLP
495 METRO PLACE SOUTH
SUITE 210
DUBLIN, OH 43017

In re Application of	:	
David E. Guza	:	
Application No. 10/809,228	:	DECISION ON PETITION
Filed: March 25, 2004	:	UNDER 37 CFR 1.78(a)(6)
Attorney Docket No. GUZ 1333-003B	:	

This is a decision on the renewed petition, filed July 10, 2006, which is being treated under 37 CFR 1.78(a)(6) to accept an unintentionally delayed claim under 35 U.S.C. §119(e) for the benefit of the prior-filed provisional application set forth in the concurrently filed amendment.

The petition is **GRANTED**.

A petition under 37 CFR 1.78(a)(6) is only applicable to those applications filed on or after November 29, 2000. Further, the petition is appropriate only after expiration of the period specified in 37 CFR 1.78(a)(5)(ii) and must be filed during the pendency of the nonprovisional application. In addition, the petition must be accompanied by:

(1) the reference required by 35 U.S.C. § 119(e) and 37 CFR 1.78(a)(5)(i) to the prior-filed application, unless previously submitted;
(2) the surcharge set forth in § 1.17(t); and
(3) a statement that the entire delay between the date the claim was due under 37 CFR 1.78(a)(5)(ii) and the date the claim was filed was unintentional. The Commissioner may require additional information where there is a question whether the delay was unintentional.

This pending nonprovisional application was filed on March 25, 2004, within twelve months of the filing date of the prior-filed provisional application, Application No. 60/457,526, which was filed on March 25, 2003, for which priority is claimed. A reference to the prior-filed provisional application has been included in an amendment to the first sentence of the specification following the title.

Accordingly, having found that the petition satisfies the conditions of 37 CFR 1.78(a)(6) for acceptance of an unintentionally delayed claim for priority under 35 U.S.C. §119(e), the petition is granted.

The granting of the petition to accept the delayed benefit claim to the prior-filed application under 37 CFR 1.78(a)(6) should not be construed as meaning that the instant application is entitled to the benefit of the filing date of the prior-filed application. In order for the instant application to be entitled to the benefit of the prior-filed application, all other requirements under 35 U.S.C. §119(e) and 37 CFR 1.78(a)(4) and (a)(5) must be met. Similarly, the fact that the corrected Filing Receipt accompanying this decision on petition includes the prior-filed application should not be construed as meaning that applicant is entitled to the claim for benefit of priority to the prior-filed application noted thereon. Accordingly, the examiner will, in due course, consider this benefit claim and determine whether the instant application is entitled to the benefit of the earlier filing date.

Any inquiries concerning this decision may be directed to Sherry D. Brinkley at (571) 272-3204.

The application is being forwarded to Technology Center AU 3781 for appropriate action on the amendment submitted July 10, 2006, including consideration by the examiner of the claim under 35 U.S.C. §119(e) for the benefit of priority to prior-filed provisional Application No. 60/457,526.

Sherry D. Brinkley
Petitions Examiner
Office of Petitions

Frances M. Hicks
Petitions Examiner
Office of Petitions

Attachment: Corrected Filing Receipt

UNITED STATES PATENT AND TRADEMARK OFFICE

UNITED STATES DEPARTMENT OF COMMERCE
United States Patent and Trademark Office
Address: COMMISSIONER FOR PATENTS
P.O. Box 1450
Alexandria, Virginia 22313-1450
www.uspto.gov

APPL NO.	FILING OR 371 (c) DATE	ART UNIT	FIL FEE REC'D	ATTY.DOCKET NO	DRAWINGS	TOT CLMS	IND CLMS
10/809,228	03/25/2004	3781	450	GUZ 1333-003B	6	17	3

CONFIRMATION NO. 6700
CORRECTED FILING RECEIPT
OC000000021316991
OC000000021316991

08698
STANDLEY LAW GROUP LLP
495 METRO PLACE SOUTH
SUITE 210
DUBLIN, OH 43017

Date Mailed: 11/21/2006

Receipt is acknowledged of this regular Patent Application. It will be considered in its order and you will be notified as to the results of the examination. Be sure to provide the U.S. APPLICATION NUMBER, FILING DATE, NAME OF APPLICANT, and TITLE OF INVENTION when inquiring about this application. Fees transmitted by check or draft are subject to collection. Please verify the accuracy of the data presented on this receipt. **If an error is noted on this Filing Receipt, please mail to the Commissioner for Patents P.O. Box 1450 Alexandria Va 22313-1450. Please provide a copy of this Filing Receipt with the changes noted thereon. If you received a "Notice to File Missing Parts" for this application, please submit any corrections to this Filing Receipt with your reply to the Notice. When the USPTO processes the reply to the Notice, the USPTO will generate another Filing Receipt incorporating the requested corrections (if appropriate).**

Applicant(s)

David E. Guza, Dublin, OH;

Power of Attorney: The patent practitioners associated with Customer Number **08698**.

Domestic Priority data as claimed by applicant

This appln claims benefit of 60/457,526 03/25/2003

Foreign Applications

If Required, Foreign Filing License Granted: 06/07/2004

The country code and number of your priority application, to be used for filing abroad under the Paris Convention, is
US10/809,228

Projected Publication Date: Request for Non-Publication Acknowledged

Non-Publication Request: Yes

Early Publication Request: No

**** SMALL ENTITY ****

Title

Floor shield carrying bag accessory

Preliminary Class

190

PROTECTING YOUR INVENTION OUTSIDE THE UNITED STATES

Since the rights granted by a U.S. patent extend only throughout the territory of the United States and have no effect in a foreign country, an inventor who wishes patent protection in another country must apply for a patent in a specific country or in regional patent offices. Applicants may wish to consider the filing of an international application under the Patent Cooperation Treaty (PCT). An international (PCT) application generally has the same effect as a regular national patent application in each PCT-member country. The PCT process **simplifies** the filing of patent applications on the same invention in member countries, but **does not result** in a grant of "an international patent" and does not eliminate the need of applicants to file additional documents and fees in countries where patent protection is desired.

Almost every country has its own patent law, and a person desiring a patent in a particular country must make an application for patent in that country in accordance with its particular laws. Since the laws of many countries differ in various respects from the patent law of the United States, applicants are advised to seek guidance from specific foreign countries to ensure that patent rights are not lost prematurely.

Applicants also are advised that in the case of inventions made in the United States, the Director of the USPTO must issue a license before applicants can apply for a patent in a foreign country. The filing of a U.S. patent application serves as a request for a foreign filing license. The application's filing receipt contains further information and guidance as to the status of applicant's license for foreign filing.

Applicants may wish to consult the USPTO booklet, "General Information Concerning Patents" (specifically, the section entitled "Treaties and Foreign Patents") for more information on timeframes and deadlines for filing foreign patent applications. The guide is available either by contacting the USPTO Contact Center at 800-786-9199, or it can be viewed on the USPTO website at http://www.uspto.gov/web/offices/pac/doc/general/index.html.

For information on preventing theft of your intellectual property (patents, trademarks and copyrights), you may wish to consult the U.S. Government website, http://www.stopfakes.gov. Part of a Department of Commerce initiative, this website includes self-help "toolkits" giving innovators guidance on how to protect intellectual property in specific countries such as China, Korea and Mexico. For questions regarding patent enforcement issues, applicants may call the U.S. Government hotline at 1-866-999-HALT (1-866-999-4158).

LICENSE FOR FOREIGN FILING UNDER
Title 35, United States Code, Section 184
Title 37, Code of Federal Regulations, 5.11 & 5.15

GRANTED

The applicant has been granted a license under 35 U.S.C. 184, if the phrase "IF REQUIRED, FOREIGN FILING LICENSE GRANTED" followed by a date appears on this form. Such licenses are issued in all applications where the conditions for issuance of a license have been met, regardless of whether or not a license may be required as set forth in 37 CFR 5.15. The scope and limitations of this license are set forth in 37 CFR 5.15(a) unless an earlier license has been issued under 37 CFR 5.15 (b). The license is subject to revocation upon written notification. The date indicated is the effective date of the license, unless an earlier license of similar scope has been granted under 37 CFR 5.13 or 5.14.

This license is to be retained by the licensee and may be used at any time on or after the effective date thereof unless it is revoked. This license is automatically transferred to any related applications(s) filed under 37 CFR 1.53(d). This license is not retroactive.

The grant of a license does not in any way lessen the responsibility of a licensee for the security of the subject matter as imposed by any Government contract or the provisions of existing laws relating to espionage and the national security or the export of technical data. Licensees should apprise themselves of current regulations especially with respect to certain countries, of other agencies, particularly the Office of Defense Trade Controls, Department of State (with respect to Arms, Munitions and Implements of War (22 CFR 121-128)); the Bureau of Industry and Security, Department of Commerce (15 CFR parts 730-774); the Office of Foreign Assets Control, Department of Treasury (31 CFR Parts 500+) and the Department of Energy.

NOT GRANTED

No license under 35 U.S.C. 184 has been granted at this time, if the phrase "IF REQUIRED, FOREIGN FILING LICENSE GRANTED" DOES NOT appear on this form. Applicant may still petition for a license under 37 CFR 5.12, if a license is desired before the expiration of 6 months from the filing date of the application. If 6 months has lapsed from the filing date of this application and the licensee has not received any indication of a secrecy order under 35 U.S.C. 181, the licensee may foreign file the application pursuant to 37 CFR 5.15(b).

UNITED STATES PATENT AND TRADEMARK OFFICE

UNITED STATES DEPARTMENT OF COMMERCE
United States Patent and Trademark Office
Address: COMMISSIONER FOR PATENTS
P.O. Box 1450
Alexandria, Virginia 22313-1450
www.uspto.gov

APPLICATION NO.	FILING DATE	FIRST NAMED INVENTOR	ATTORNEY DOCKET NO.	CONFIRMATION NO.
10/809,234	03/25/2004	Jian Fan	200315286-1	6694

22879 7590 08/06/2008
HEWLETT PACKARD COMPANY
P O BOX 272400, 3404 E. HARMONY ROAD
INTELLECTUAL PROPERTY ADMINISTRATION
FORT COLLINS, CO 80527-2400

EXAMINER
COUSO, JOSE L

ART UNIT	PAPER NUMBER
2624	

NOTIFICATION DATE	DELIVERY MODE
08/06/2008	ELECTRONIC

Please find below and/or attached an Office communication concerning this application or proceeding.

The time period for reply, if any, is set in the attached communication.

Notice of the Office communication was sent electronically on above-indicated "Notification Date" to the following e-mail address(es):

JERRY.SHORMA@HP.COM
mkraft@hp.com
ipa.mail@hp.com

HEWLETT PACKARD COMPANY
P O BOX 272400, 3404 E. HARMONY ROAD
INTELLECTUAL PROPERTY ADMINISTRATION
FORT COLLINS CO 80527-2400

In re Application of	:	
FAN JIAN et al.	:	
Application No. 10/809,234	:	**DECISION ON PETITION**
Filed: March 25, 2004	:	
Attorney Docket No. 200315289-1	:	

This is a decision on the Petition to Stop Improper Abandonment received in the United States Patent and Trademark (USPTO) on May 13, 2008, which is being treated as a Petition To Withdraw the Holding Of Abandonment for the above-identified application.

The petition is **GRANTED**.

The application was held abandoned for failure to timely pay the issue fee as required in the NOTICE OF ALLOWANCE AND FEE(S) DUE, mailed February 7, 2008, which set a three (3) month statutory period for reply.

Petitioner has demonstrated that the Part B – Fee(s) Transmittal, Transmittal Of Payment Of Issue Fee, and authorization to charge Deposit Account No. 08-2025 in the amount of $1,440 and $300 were timely facsimiled to the USPTO on March 31, 2008, and is in compliance with 37 CFR 1.8(b) in that (1) the United States Patent and Trademark Office was promptly informed of the previous timely submission, (2) a copy of the previously facsimiled correspondence with USPTO Auto-Reply Facsimile Transmission has been submitted, and (3) included a statement which attests to the previous timely facsimile.

In view of the above, the holding of abandonment is hereby withdrawn. Accordingly, the issue fee and publication fee will be accepted as timely, as March 31, 2008. As authorized, the issue fee in the amount of $1,440, and $300 for the publication fee were charged to Deposit Account No. 08-2025.

The application will be forwarded to the Patent Publication Branch to be promptly processed in to a patent. Per Patent Term Adjustment Rule 705, when the applicant receives the issue notification, a separate paper should be sent to the USPTO if applicant believes any adjustment to the Patent Term is warranted.

/Anita Greene/
Office of Data Management
703-308-9250 ex 154

UNITED STATES PATENT AND TRADEMARK OFFICE

UNITED STATES DEPARTMENT OF COMMERCE
United States Patent and Trademark Office
Address: COMMISSIONER FOR PATENTS
P.O. Box 1450
Alexandria, Virginia 22313-1450
www.uspto.gov

Mahamedi Paradice Kreisman LLP (NLMI)
550 South Winchester Blvd.
Suite 605
San Jose, CA 95128

Mail Date: 04/21/2010

Applicant	: Pankaj Gupta	: DECISION ON REQUEST FOR
Patent Number	: 7571156	: RECALCULATION of PATENT
Issue Date	: 08/04/2009	: TERM ADJUSTMENT IN VIEW
Appliction No	: 10/809,244	: OF WYETH
Filed	: 03/25/2004	:
		:

The Patentee's Request for Recalculation is **DISMISSED.**

This Request is deemed ineligible for consideration for one or more of the following reasons:

(A). The patent for which PTA recalculation is requested is either a design or reissue application or is a reexamination proceeding;

(B). The patent for which PTA recalculation is requested resulted from a utility or plant application filed under 35 USC 111(a) before May 29, 2000 and no CPA filed in the application on/after May 29, 2000;

(C). The patent for which PTA recalculation is requested resulted from an international application in which the international filing date was before May 29, 2000 and no CPA filed in the application on/after May 29, 2000;

(D). The patent for which PTA recalculation is requested issued on/after March 2, 2010;

(E). The Request for Recalculation was filed more than 180 days after the grant date of the patent and the request was not filed within two months of a dismissal of a request for reconsideration of the of the patent term under 37 CFR 1.705(d);

(F). The Request for Recalculation is not solely limited to USPTO pre-Wyeth interpretation of 35 U.S.C. 154(b)(2)(A);

or

(G). A civil action was filed pursuant to 35 U.S.C. 154(b)(4)(A)concerning the same patent at issue in this request.

Patentee may file a reply to this decision dismissing the Request for Recalculation. Patentee must file such reply within one month or thirty days, whichever is longer, of the mail date of the decision dismissing the Request for Recalculation. No fee is required if patentee is asserting in the reply that the dismissal for ineligibility is improper.

Patentee should use document code PET.OP if electronically filing a reply to this dismissal. If the USPTO finds that the request was improperly deemed ineligible, the USPTO will mail applicant a recalculation determination.

Patentee should be aware that in order to preserve the right to review in the United States District Court for the District of Columbia of the USPTO patent term adjustment determination, patentee must ensure that he or she also take the steps required under 35 U.S.C. 154(b)(4)(A). Nothing in the request for recalculation should be construed as providing an alternative time frame for commencing a civil action under 35 U.S.C. 154 (b)(4)(A).

Any questions concerning this decision should be directed to the Office of Patent Legal Administration at 571-272-7702.

SPE RESPONSE FOR CERTIFICATE OF CORRECTION

Paper No.: _____

DATE : 12-7-06

TO SPE OF : ART UNIT 3672

SUBJECT : Request for Certificate of Correction for Appl. No.: 10/809256 Patent No.: 7063159

Please respond to this request for a certificate of correction within 7 days.

Please review the requested changes/corrections as shown in the **COCIN** document(s) in the IFW application image. No new matter should be introduced, nor should the scope or meaning of the claims be changed.

Please check Drawings

Please complete the response (see below) and forward the completed response to scanning using document code **COCX**.

Certificates of Correction Branch

703-308-9390 ext. 117

Thank You For Your Assistance

The request for issuing the above-identified correction(s) is hereby:

Note your decision on the appropriate box.

- ☒ Approved — All changes apply.
- ☐ Approved in Part — Specify below which changes do not apply.
- ☐ Denied — State the reasons for denial below.

Comments: _____

DAVID BAGNELL
SUPERVISORY PATENT EXAMINER
TECHNOLOGY CENTER 3600

SPE

3672
Art Unit

UNITED STATES PATENT AND TRADEMARK OFFICE

UNITED STATES DEPARTMENT OF COMMERCE
United States Patent and Trademark Office
Address: COMMISSIONER FOR PATENTS
P.O. Box 1450
Alexandria, Virginia 22313-1450
www.uspto.gov

INDIANAPOLIS OFFICE 27879
BRINKS HOFER GILSON & LIONE
CAPITAL CENTER, SUITE 1100
201 NORTH ILLINOIS STREET
INDIANAPOLIS, IN 46204-4220

Mail Date: 04/21/2010

Applicant	: Naoki Yamane	: DECISION ON REQUEST FOR
Patent Number	: 7590411	: RECALCULATION of PATENT
Issue Date	: 09/15/2009	: TERM ADJUSTMENT IN VIEW
Appliction No	: 10/809,278	: OF WYETH AND NOTICE OF INTENT TO
Filed	: 03/25/2004	: ISSUE CERTIFICATE OF CORRECTION
		:

The Request for Recalculation is **GRANTED** to the extent indicated.

The patent term adjustment has been determined to be **0** days. The USPTO will *sua sponte* issue a certificate of correction reflecting the amount of PTA days determined by the recalculation.

Prior to the issuance of the certificate of correction, the USPTO will afford patentee an opportunity to be heard and request reconsideration. Accordingly, patentee has **one month or thirty (30) days**, whichever is longer, to file a request for reconsideration of this patent term adjustment calculation. See 35 U.S.C. 154(b)(3)(B)(ii) and 37 CFR 1.322(a)(4). No extensions of time will be granted under 37 CFR 1.136.

Patentee should use document code PET.OP if electronically filing a request for reconsideration of this patent term adjustment calculation. The patentee must also include the information required by 37 CFR 1.705(b)(2) and the fee required by 37 CFR 1.18(e). If patentee does not file a timely request for reconsideration of this patent term adjustment calculation including the information required by 37 CFR 1.705(b)(2) and the fee required by 37 CFR 1.18(e), the USPTO will issue a certificate of correction reflecting the PTA determination noted above.

Patentee should be aware that in order to preserve the right to review in the United States District Court for the District of Columbia of the USPTO patent term adjustment determination, patentee must ensure that he or she also take the steps required under 35 U.S.C. 154(b)(4)(A) in a timely manner. Nothing in the request for recalculation should be construed as providing an alternative time frame for commencing a civil action under 35 U.S.C. 154(b)(4)(A).

Any questions concerning this decision should be directed to the Office of Patent Legal Administration at 571-272-7702.

UNITED STATES PATENT AND TRADEMARK OFFICE

Commissioner for Patents
United States Patent and Trademark Office
P.O. Box 1450
Alexandria, VA 22313-1450
www.uspto.gov

JONATHAN SPANGLER
NUVASIVE, INC.
7475 LUSK BOULEVARD
SAN DIEGO CA 92121

COPY MAILED

AUG 2 6 2008

OFFICE OF PETITIONS

In re Application of	:
Gharib et al.	:
Application No. 10/809,280	: DECISION GRANTING PETITION
Filed: March 25, 2004	: UNDER 37 CFR 1.78(a)(6)
Attorney Docket No. 071US1	:

This is a decision on the petition under 37 CFR 1.78(a)(6), filed August 5, 2008, to accept an unintentionally delayed claim under 35 U.S.C. § 119(e) for the benefit of prior-filed provisional Application No. 60/325,424, filed September 25, 2001, as set forth in the concurrently filed amendment.

The petition is **GRANTED**.

A petition under 37 CFR 1.78(a)(6) is only applicable to those applications filed on or after November 29, 2000. Further, the petition is appropriate only after expiration of the period specified in 37 CFR 1.78(a)(5)(ii) and must be filed during the pendency of the nonprovisional application. In addition, the petition must be accompanied by:

(1) the reference required by 35 U.S.C. § 119(e) and 37 CFR 1.78(a)(5)(i) to the prior-filed application, unless previously submitted;
(2) the surcharge set forth in § 1.17(t); and
(3) a statement that the entire delay between the date the claim was due under 37 CFR 1.78(a)(5)(ii) and the date the claim was filed was unintentional. The Commissioner may require additional information where there is a question whether the delay was unintentional.

The instant nonprovisional application was filed after November 29, 2000, and the claim herein for the benefit of priority to the prior-filed provisional application is submitted after expiration of the period specified by 37 CFR 1.78(a)(5)(ii). Therefore, this is a proper petition under 37 CFR 1.78(a)(6).

The instant nonprovisional application was pending at the time of filing of the reference to the prior-filed provisional application as required by 37 1.78(a)(5)(iii). Additionally, the instant intermediate PCT application was filed within twelve months of the filing date of the prior-filed provisional application for which priority is claimed.

The petition complies with the requirements for a grantable petition under 37 CFR 1.78(a)(6) in that (1) a reference to the above-noted, prior-filed provisional application has been included in an amendment to the first sentence of the specification following the title, as provided by 37 CFR 1.78(a)(5)(iii); (2) the surcharge fee required by 37 CFR 1.17(t) has been submitted; and (3) the petition contains a proper statement of unintentional delay. Accordingly, having found that the

instant petition for acceptance of an unintentionally delayed claim for the benefit of priority under 35 U.S.C. § 119(e) to the above-noted, prior-filed provisional application satisfies the conditions of 37 CFR 1.78(a)(6), the petition is granted.

The granting of the petition to accept the delayed benefit claim to the prior-filed application under 37 CFR 1.78(a)(6) should not be construed as meaning that the instant application is entitled to the benefit of the filing date of the prior-filed application. In order for the instant application to be entitled to the benefit of the prior-filed application, all other requirements under 35 U.S.C. §119(e) and 37 CFR 1.78(a)(4) and (a)(5) must be met. Similarly, the fact that the corrected Filing Receipt accompanying this decision on petition includes the prior-filed application should not be construed as meaning that applicant is entitled to the claim for benefit of priority to the prior-filed application noted thereon. Accordingly, the examiner will, in due course, consider this benefit claim and determine whether the instant application is entitled to the benefit of the earlier filing date.

A corrected Filing Receipt, which includes the priority claim to the prior-filed provisional application, accompanies this decision on petition.

Any inquiries concerning this decision may be directed to the undersigned at (571) 272-3206. Any other inquiries concerning either the examination procedures or status of the application should be directed to the Technology Center.

This matter is being referred to Technology Center AU 3736 for appropriate action on the amendment submitted August 5, 2008, including consideration by the examiner of the claim under 35 U.S.C. §119(e) for the benefit of priority to prior-filed provisional Application No. 60/325,424.

Liana Walsh
Petitions Examiner
Office of Petitions

ATTACHMENT: Corrected Filing Receipt

UNITED STATES PATENT AND TRADEMARK OFFICE

UNITED STATES DEPARTMENT OF COMMERCE
United States Patent and Trademark Office
Address: COMMISSIONER FOR PATENTS
P.O. Box 1450
Alexandria, Virginia 22313-1450
www.uspto.gov

APPLICATION NUMBER	FILING or 371(c) DATE	GRP ART UNIT	FIL FEE REC'D	ATTY.DOCKET.NO	TOT CLAIMS	IND CLAIMS
10/809,280	03/25/2004	3736	575	071US1	12	1

CONFIRMATION NO. 6044

CORRECTED FILING RECEIPT

OC000000031732171

30328
JONATHAN SPANGLER
NuVasive, Inc.
7475 LUSK BOULEVARD
SAN DIEGO, CA 92121

Date Mailed: 08/25/2008

Receipt is acknowledged of this non-provisional patent application. The application will be taken up for examination in due course. Applicant will be notified as to the results of the examination. Any correspondence concerning the application must include the following identification information: the U.S. APPLICATION NUMBER, FILING DATE, NAME OF APPLICANT, and TITLE OF INVENTION. Fees transmitted by check or draft are subject to collection. Please verify the accuracy of the data presented on this receipt. **If an error is noted on this Filing Receipt, please submit a written request for a Filing Receipt Correction. Please provide a copy of this Filing Receipt with the changes noted thereon. If you received a "Notice to File Missing Parts" for this application, please submit any corrections to this Filing Receipt with your reply to the Notice. When the USPTO processes the reply to the Notice, the USPTO will generate another Filing Receipt incorporating the requested corrections**

Applicant(s)

James Gharib, San Diego, CA;
Allen Farquhar, San Diego, CA;
Norbert Kaula, Arvada, CO;
Jeffrey J. Blewett, San Diego, CA, Deceased;
Goretti Medeiros, Plantsville, CT, Legal Representative;
Eric Finley, San Diego, CA;
Jamil Elbanna, San Diego, CA;
Scot Martinelli, San Diego, CA;

Power of Attorney: None

Domestic Priority data as claimed by applicant

This application is a CON of PCT/US02/30617 09/25/2002
which claims benefit of 60/325,424 09/25/2001

Foreign Applications

If Required, Foreign Filing License Granted: 06/08/2004

The country code and number of your priority application, to be used for filing abroad under the Paris Convention, is **US 10/809,280**

Projected Publication Date: Not Applicable

Non-Publication Request: No

Early Publication Request: No
**** SMALL ENTITY ****

Title

SYSTEM AND METHODS FOR PERFORMING SURGICAL PROCEDURES AND ASSESSMENTS

Preliminary Class

600

PROTECTING YOUR INVENTION OUTSIDE THE UNITED STATES

Since the rights granted by a U.S. patent extend only throughout the territory of the United States and have no effect in a foreign country, an inventor who wishes patent protection in another country must apply for a patent in a specific country or in regional patent offices. Applicants may wish to consider the filing of an international application under the Patent Cooperation Treaty (PCT). An international (PCT) application generally has the same effect as a regular national patent application in each PCT-member country. The PCT process **simplifies** the filing of patent applications on the same invention in member countries, but **does not result** in a grant of "an international patent" and does not eliminate the need of applicants to file additional documents and fees in countries where patent protection is desired.

Almost every country has its own patent law, and a person desiring a patent in a particular country must make an application for patent in that country in accordance with its particular laws. Since the laws of many countries differ in various respects from the patent law of the United States, applicants are advised to seek guidance from specific foreign countries to ensure that patent rights are not lost prematurely.

Applicants also are advised that in the case of inventions made in the United States, the Director of the USPTO must issue a license before applicants can apply for a patent in a foreign country. The filing of a U.S. patent application serves as a request for a foreign filing license. The application's filing receipt contains further information and guidance as to the status of applicant's license for foreign filing.

Applicants may wish to consult the USPTO booklet, "General Information Concerning Patents" (specifically, the section entitled "Treaties and Foreign Patents") for more information on timeframes and deadlines for filing foreign patent applications. The guide is available either by contacting the USPTO Contact Center at 800-786-9199, or it can be viewed on the USPTO website at http://www.uspto.gov/web/offices/pac/doc/general/index.html.

For information on preventing theft of your intellectual property (patents, trademarks and copyrights), you may wish to consult the U.S. Government website, http://www.stopfakes.gov. Part of a Department of Commerce initiative, this website includes self-help "toolkits" giving innovators guidance on how to protect intellectual property in specific countries such as China, Korea and Mexico. For questions regarding patent enforcement issues, applicants may call the U.S. Government hotline at 1-866-999-HALT (1-866-999-4158).

LICENSE FOR FOREIGN FILING UNDER

Title 35, United States Code, Section 184

Title 37, Code of Federal Regulations, 5.11 & 5.15

GRANTED

The applicant has been granted a license under 35 U.S.C. 184, if the phrase "IF REQUIRED, FOREIGN FILING LICENSE GRANTED" followed by a date appears on this form. Such licenses are issued in all applications where the conditions for issuance of a license have been met, regardless of whether or not a license may be required as

set forth in 37 CFR 5.15. The scope and limitations of this license are set forth in 37 CFR 5.15(a) unless an earlier license has been issued under 37 CFR 5.15(b). The license is subject to revocation upon written notification. The date indicated is the effective date of the license, unless an earlier license of similar scope has been granted under 37 CFR 5.13 or 5.14.

This license is to be retained by the licensee and may be used at any time on or after the effective date thereof unless it is revoked. This license is automatically transferred to any related applications(s) filed under 37 CFR 1.53(d). This license is not retroactive.

The grant of a license does not in any way lessen the responsibility of a licensee for the security of the subject matter as imposed by any Government contract or the provisions of existing laws relating to espionage and the national security or the export of technical data. Licensees should apprise themselves of current regulations especially with respect to certain countries, of other agencies, particularly the Office of Defense Trade Controls, Department of State (with respect to Arms, Munitions and Implements of War (22 CFR 121-128)); the Bureau of Industry and Security, Department of Commerce (15 CFR parts 730-774); the Office of Foreign AssetsControl, Department of Treasury (31 CFR Parts 500+) and the Department of Energy.

NOT GRANTED

No license under 35 U.S.C. 184 has been granted at this time, if the phrase "IF REQUIRED, FOREIGN FILING LICENSE GRANTED" DOES NOT appear on this form. Applicant may still petition for a license under 37 CFR 5.12, if a license is desired before the expiration of 6 months from the filing date of the application. If 6 months has lapsed from the filing date of this application and the licensee has not received any indication of a secrecy order under 35 U.S.C. 181, the licensee may foreign file the application pursuant to 37 CFR 5.15(b).

1. In view of the papers filed 9/15/08, it has been found that this nonprovisional application, as filed, through error and without deceptive intent, improperly set forth the inventorship, and accordingly, this application has been corrected in compliance with 37 CFR 1.48(a). The inventorship of this application has been changed by the deletion of Eric Finely, Jamil Elbanna, and Scot Martinelli.

The application will be forwarded to the Office of Initial Patent Examination (OIPE) for issuance of a corrected filing receipt, and correction of Office records to reflect the inventorship as corrected.

Any inquiry concerning this communication or earlier communications from the examiner should be directed to JONATHAN ML FOREMAN whose telephone number is (571)272-4724. The examiner can normally be reached on Monday - Friday 8:00 am - 4:30 pm.

If attempts to reach the examiner by telephone are unsuccessful, the examiner's supervisor, Max Hindenburg can be reached on (571)272-4726. The fax phone number for the organization where this application or proceeding is assigned is 571-273-8300.

Information regarding the status of an application may be obtained from the Patent Application Information Retrieval (PAIR) system. Status information for published applications may be obtained from either Private PAIR or Public PAIR. Status information for unpublished applications is available through Private PAIR only. For more information about the PAIR system, see http://pair-direct.uspto.gov. Should you have questions on access to the Private PAIR system, contact the Electronic Business Center (EBC) at 866-217-9197 (toll-free). If you would like assistance from a USPTO Customer Service Representative or access to the automated information system, call 800-786-9199 (IN USA OR CANADA) or 571-272-1000.

/J. M. F./
Examiner, Art Unit 3736

/Max Hindenburg/
Supervisory Patent Examiner, Art Unit 3736

UNITED STATES PATENT AND TRADEMARK OFFICE

Commissioner for Patents
United States Patent and Trademark Office
P.O. Box 1450
Alexandria, VA 22313-1450
www.uspto.gov

Paper No.

FISH & RICHARDSON P.C.
PO BOX 1022
MINNEAPOLIS MN 55440-1022

COPY MAILED

OCT 0 2 2008

OFFICE OF PETITIONS

In re Patent No. 7,351,136	:	
Nelson et al.	:	DECISION ON LETTER
Issue Date: April 1, 2008	:	REGARDING
Application No. 10/809,286	:	PATENT TERM ADJUSTMENT
Filed: March 25, 2004	:	and
Attorney Docket No.	:	NOTICE OF INTENT TO ISSUE
12477-016001	:	CERTIFICATE OF CORRECTION

This is a decision on the "LETTER REGARDING PATENT TERM ADJUSTMENT," filed on January 11, 2008. The letter is being construed as a letter filed pursuant to patentees' duty of good faith and candor, patentees request that the Patent Term Adjustment for the above-identified patent be reviewed for accuracy.

The request for reconsideration of the patent term adjustment indicated in the patent is **GRANTED**.

The patent term adjustment indicated in the patent is to be corrected by issuance of a certificate of correction showing a revised Patent Term Adjustment of one hundred fifty (150) days.

On October 12, 2007, the Determination of Patent Term Adjustment under 35 U.S.C. § 154(b) was mailed, stating that the Patent Term Adjustment was 0 days. This delay was calculated as follows: a delay of 26 days for the mailing of a non-final office action on April 12, 2006, four (4) months and (26) days after the filing of a response on November 17, 2005. This was reduced by applicant delay as follows: a delay of 65 days resulting from the filing of a response to the Notice to File Missing Parts mailed on June 8, 2004, three (3) months and 65

days after the mailing of the Notice to File Missing Parts on June 8, 2004; a delay of 51 days for the filing of a response to a non-final Office action on November 17, 2005, three (3) months and 51 days after the mailing of the non-final Office action mailed on June 27, 2005; a delay of one (1) day for the filing of a response to a non-final Office action on July 13, 2006, three (3) months and (1) day after the mailing of a non-final Office action on April 12, 2006; and a delay of 23 days for the filing of a response to a non-final Office action on July 23, 2007, three (3) months and 23 days after the mailing of the non-final Office action on March 30, 2007.

On January 11, 2008, the issue and publication fees were filed, along with the subject letter regarding patent term adjustment.

Applicant states that the calculation of Applicant delay is believed to be too low.

On April 1, 2008, the above-identified application matured into U.S. Patent No. 7,351,136.

The Patent issued with a revised Patent Term Adjustment of one hundred fifty-one (151) days based on an adjustment for PTO delay of three hundred seventy-three (373) days reduced by two hundred twenty-two (222) days of applicant delay. This additional delay was calculated as follows: 347 days of Office delay for issuance of the patent four (4) months and 347 days after the payment of the issue fee on January 11, 2008. This period was reduced by a total of 82 (40+42) days for the filing of corrected drawings and an amendment after a notice of allowance, both mailed on January 11, 2008, 82 days prior to the issuance of the patent.

Applicant states no basis for a reduction in the patent term adjustment.

A review of the record reveals that the Notice of Appeal filed on March 5, 2007, was filed three (3) months and (1) day after the mailing of the final Office action mailed on December 4, 2006. Accordingly, the patent term adjustment should be reduced by one (1) day for applicant delay pursuant to 37 CFR 1.704(b).

In view thereof, the correct determination of PTA at the time of the issuance of the patent is one hundred fifty (150) days (373

(26+347) days of PTO delay, reduced by two hundred twenty-three (223) (65+51+1+1+23+40+42) days of Applicant delay). To the extent that applicants are aware of any specific error in the PTA calculation, applicants should so advise the Office.

As the instant letter was submitted to advise the Office of an error in Applicant's favor, the $200.00 application fee under 37 CFR 1.705(b) was not required, and has not been charged.

The application file is being forwarded to the Certificate of Correction Branch for issuance of a certificate of correction in order to rectify this error. The Office will issue a Certificate of Correction indicating that the term of the above-identified patent is extended or adjusted by ONE HUNDRED FIFTY (150) days.

Telephone inquiries specific to this matter should be directed to Douglas I. Wood, Senior Petitions Attorney, at (571) 272-3231.

Nancy Johnson
Senior Petitions Attorney
Office of Petitions

Encl: Copy of DRAFT Certificate of Correction

UNITED STATES PATENT AND TRADEMARK OFFICE

CERTIFICATE OF CORRECTION

PATENT : 7,351,136 B2

DATED : April 1, 2008

INVENTOR(S) : Chad Nelson

DRAFT

It is certified that error appears in the above-identified patent and that said Letters Patent is hereby corrected as shown below:

On the cover page,

[*] Notice: Subject to any disclaimer, the term of this patent is extended or adjusted under 35 USC 154(b) by (151) days

Delete the phrase "by 151 days" and insert – by 150 days--

UNITED STATES PATENT AND TRADEMARK OFFICE

Commissioner for Patents
United States Patent and Trademark Office
P.O. Box 1450
Alexandria, VA 22313-1450
www.uspto.gov

JHK LAW
P.O. BOX 1078
LA CANADA, CA 91012-1078

COPY MAILED

AUG 0 4 2008

In re Application of	:	
Cynthia C. Bamdad, et. al.	:	
Application No. 10/809,291	:	ON PETITION
Filed: March 25, 2004	:	
Attorney Docket No. M1015.70002US01	:	

This is a decision on the petition under 37 CFR 1.137(b), filed on December 13, 2007, to revive the above-identified application.

The application became abandoned for failure to file a response to the non-final Office action mailed October 4, 2005. A Notice of Abandonment was mailed on June 5, 2006.

The petition satisfies the requirements of 37 CFR 1.137(b) in that petitioner has supplied (1) the reply in the form of an amendment; (2) the petition fee of $770; and (3) a proper statement of unintentional delay. Therefore, the petition is **GRANTED**.

The Office acknowledges receipt of $525 for a three month extension of time filed on December 13, 2007. However, an extension of time under 37 CFR 1.136 must be filed prior to the expiration of the maximum extendable period for reply. *See* In re Application of S., 8 USPQ2d 1630, 1631 (Comm'r. Pats. 1988). Since the $525 extension of time fee was subsequent to the maximum extendable period for reply, this fee is unnecessary and petitioner may request a refund of this fee by writing to the following address: Mail Stop 16, Commissioner for Patents, P. O. Box 1450, Alexandria, VA 22313-1450. A copy of this decision should accompany petitioner's request.

This application file is being referred to the Technology Center Art Unit 1641 for review of the amendment filed with the instant petition.

Telephone inquiries concerning this decision should be directed to the undersigned at (571) 272-3226.

Andrea Smith
Petitions Examiner
Office of Petitions

UNITED STATES PATENT AND TRADEMARK OFFICE

Commissioner for Patents
United States Patent and Trademark Office
P.O. Box 1450
Alexandria, VA 22313-1450
www.uspto.gov

Paul D. Greeley, Esq.
Ohlandt, Greeley, Ruggiero & Perle, L.L.P.
One Landmark Square, 10th Floor
Stamford, CT 06901-2682

COPY MAILED

MAY 13 2008

OFFICE OF PETITIONS

In re Application of Peters et al. :
Application No. 10/809,301 :
Filing Date: March 25, 2004 :
Attorney Docket No. 139282 :

Decision on Petition

This is a decision on the petition under 37 CFR 1.137(b), filed December 13, 2007, to revive the above-identified application.

The petition is **granted**.

The above-identified application became abandoned for failure to reply in a proper manner to the final Office action mailed April 24, 2006, which set a shortened statutory period for reply of three (3) months. An extension of time under the provisions of 37 CFR 1.136(a) was not obtained. Accordingly, the above-identified application became abandoned on July 25, 2006. A Notice of Abandonment was mailed November 1, 2006.

The instant petition requests revival of the application.

Petitioner has submitted the required petition fee of $1,540.

Petitioner has submitted a reply to the final Office action in the form of a Request for Continued Examination and amendment.

37 CFR 1.137(b)(3) requires "a statement that the entire delay in filing the required reply from the due date for the reply until the filing of a grantable petition pursuant to 37 CFR 1.137(b) [was] unintentional." To the extent any statement of delay in the petition varies from this exact language, the statement will be construed as the equivalent of the statement above. If the entire delay from the date of abandonment, July 25, 2006, until the date the petition was filed, December 13, 2007, was not unintentional, petitioner must notify the Office.

Petitioner has met the requirements to revive the above-identified application pursuant to 37 CFR 1.137(b). Therefore, the petition is granted and the application is revived.

The application has been abandoned for an extended period of time. The Patent and Trademark Office is relying on petitioner's duty of candor and good faith and accepting the statement that

the entire delay in filing the required reply from the due date for the reply until the filing of a grantable petition pursuant to 37 CFR 1.137(b) was unintentional. *See Changes to Patent Practice and Procedure*, 62 *Fed. Reg.* at 53160 and 53178; 1203 *Off. Gaz. Pat. Office* at 88 and 103 (responses to comments 64 and 109) (applicant obligated under 37 CFR 10.18 to inquire into the underlying facts and circumstances when providing the statement required by 37 CFR 1.137(b) to the Patent and Trademark Office).

Technology Center Art Unit 2837 will be informed of the instant decision and the application will be further examined in due course.

Telephone inquiries regarding this communication should be directed to Petitions Attorney Steven Brantley at (571) 272-3203.

Charles Steven Brantley
Senior Petitions Attorney
Office of Petitions

UNITED STATES PATENT AND TRADEMARK OFFICE

Commissioner for Patents
United States Patent and Trademark Office
P.O. Box 1450
Alexandria, VA 22313-1450
www.uspto.gov

DIEDERIKS & WHITELAW, PLC
12471 DILLINGHAM SQUARE, #301
WOODBRIDGE, VA 22192

COPY MAILED

OCT 05 2007

OFFICE OF PETITIONS

In re Application of
Vincent J. Contini, et al.
Application No. 10/809,331
Filed: March 26, 2004
Attorney Docket No. CON002-059

DECISION ON PETITION

This is a decision on the petition under the unintentional provisions of 37 CFR 1.137(b), filed December 15, 2006, to revive the above-identified application.

The petition is **DISMISSED**.

Any request for reconsideration of this decision must be submitted within TWO (2) MONTHS from the mail date of this decision. Extensions of time under 37 CFR 1.136(a) are permitted. The reconsideration request should include a cover letter entitled "Renewed Petition under 37 CFR 1.137(b)." This is **not** a final agency action within the meaning of 5 U.S.C. § 704.

The application became abandoned in view of a letter of express abandonment filed November 1, 2006, which is signed by a registered patent attorney or record.

A grantable petition under 37 CFR 1.137(b) must be accompanied by: (1) the required reply, unless previously filed; (2) the petition fee as set forth in 37 CFR 1.17(m); (3) a statement that the entire delay in filing the required reply from the due date for the reply until the filing of a grantable petition pursuant to 37 CFR 1.137(b) was unintentional; and (4) any terminal disclaimer (and fee as set forth in 37 CFR 1.20(d)) required by 37 CFR 1.137(d). Where there is a question as to whether either the abandonment or the delay in filing a petition under 37 CFR 1.137 was unintentional, the Director may require additional information. *See* MPEP 711.03(c)(II)(C) and (D).

The petition is not found to comply with any of the requirements of 37 CFR 1.137(b).

It is noted that petitioner indicates that the letter of abandonment was filed in the wrong application. Petitioner does not provide any evidence to support this claim. However, MPEP 711.01 clearly warns that "[i]t is imperative that the attorney or agent of record exercise every precaution in ascertaining that the abandonment of the application is in accordance with the

desires and best interests of the applicant prior to signing a letter of express abandonment of a patent application. Moreover, special care should be taken to ensure that the appropriate application is correctly identified in the letter of abandonment."

The patent statute at 35 U.S.C. § 41(a)(7) authorizes the Director to revive an "unintentionally abandoned application." The legislative history of Public Law 97-247 reveals that the purpose of 35 U.S.C. § 41(a)(7) is to permit the Office to have more discretion than in 35 U.S.C. §§ 133 or 151 to revive abandoned applications in appropriate circumstances, but places a limit on this discretion, stating that "[u]nder this section a petition accompanied by either a fee of $500 or a fee of $50 **would not be granted where the abandonment** or the failure to pay the fee for issuing the patent **was intentional** as opposed to being unintentional or unavoidable." [emphasis added]. See H.R. Rep. No. 542, 97th Cong., 2d Sess. 6-7 (1982), *reprinted in* 1982 U.S.C.C.A.N. 770-71. The revival of an intentionally abandoned application is antithetical to the meaning and intent of the statute and regulation.

There was no response period running against this application, which resulted in the abandonment of the application. The abandonment is this case resulted solely from a deliberate course of action by applicant's duly appointed representative and the abandonment was properly acknowledged by the Office. Consequently, there is a heavy burden of proof on petitioner to revive this application under the provisions of 37 CFR 1.137(b).

Petitioner states that the letter of express abandonment was filed in the wrong application. The statement is considered speculative since it does not come from someone having first hand knowledge of the filing. Statements are required from any and all person(s) having firsthand knowledge of the circumstances of the filing of the letter of express abandonment, i.e., Attorney Kirk W. Goodwin, and how the error in identifying this application for express abandonment occurred. In addition, it is necessary to establish what factors were considered in the decision making process to maintain this case or not. Any correspondence discussing the prosecution strategy to abandoned the application or maintain it in force between the firm and the client is required. Any documentary evidence demonstrating the circumstances surrounding the filing of the letter of express abandonment must also be provided.

Further correspondence with respect to this matter should be addressed as follows:

By Mail:
Mail Stop PETITION
Commissioner for Patents
P. O. Box 1450
Alexandria, VA 22313-1450

By hand:
U. S. Patent and Trademark Office
Customer Service Window, Mail Stop Petitions
Randolph Building
401 Dulany Street
Alexandria, VA 22314

The centralized facsimile number is **(571) 273-8300.**

Correspondence regarding this decision may also be filed through the electronic filing system of the USPTO. In this case, petitioner may wish to contact the undersigned regarding the filing of the renewed petition under 37 CFR 1.137(b).

Telephone inquiries concerning this decision should be directed to the undersigned at (571) 272-3204.

Sherry D. Brinkley
Petitions Examiner
Office of Petitions

UNITED STATES PATENT AND TRADEMARK OFFICE

Commissioner for Patents
United States Patent and Trademark Office
P.O. Box 1450
Alexandria, VA 22313-1450
www.uspto.gov

DIEDERIKS & WHITELAW, PLC
12471 DILLINGHAM SQUARE, #301
WOODBRIDGE, VA 22192

COPY MAILED

JUL 24 2008

In re Application of	:	
George et al.	:	
Application No. 10/809,332	:	ON PETITION
Filed: March 26, 2004	:	
Attorney Docket No. GEO001-105	:	

This is a decision on the petition under 37 CFR 1.137(b), filed December 15, 2006, to revive the above-identified application.

The petition is **DISMISSED**.

Any request for reconsideration of this decision must be submitted within TWO (2) MONTHS from the mail date of this decision. Extensions of time under 37 CFR 1.136(a) are permitted. The reconsideration request should include a cover letter entitled "Renewed Petition under 37 CFR 1.137(b)." This is **not** a final agency decision within the meaning of 5 U.S.C. § 704.

The above-identified application became abandoned in response to the petition under 37 CFR 1.138(c) filed November 1, 2006, requesting express abandonment of the above-identified application. The express abandonment was recognized on November 1, 2006. Accordingly, the above-identified application became abandoned on November 1, 2006.

A grantable petition under 37 CFR 1.137(b) must be accompanied by:

> (1) the required reply, unless previously filed;
> (2) the petition fee as set forth in 37 CFR 1.17(m);
> (3) a statement that the entire delay in filing the required reply from the due date for the reply until the filing of a grantable petition pursuant to 37 CFR 1.137(b) was unintentional; and
> (4) any terminal disclaimer (and fee as set forth in 37 CFR 1.20(d)) required by 37 CFR 1.137(d).
> Where there is a question as to whether either the abandonment or the delay in filing a petition under 37 CFR 1.137 was unintentional, the Commissioner may require additional information. See MPEP 711.03(c)(III)(C) and (D).

This petition lacks item (3). The showing of record raises questions as to whether the abandonment of this application was unintentional within the meaning of 35 USC 41(a)(7) and 37 CFR 1.137(b).

Petitioner asserts that "a representative for the Applicant filing a Request for Express Abandonment in the wrong case."

MPEP 711.01 states:

> The applicant (acquiesced in by an assignee of record), or the attorney/agent of record, if any, can sign an express abandonment. It is imperative that the attorney or agent of record exercise every precaution in ascertaining that the abandonment of the application is in accordance with the desires and best interests of the applicant prior to signing a letter of express abandonment of a patent application. Moreover, special care should be taken to ensure that the appropriate application is correctly identified in the letter of abandonment.

A thorough review of USPTO records shows that: (1) petitioner filed in the above-identified application, on November 1, 2006, a petition for express abandonment under 37 CFR 1.138(c) and (2) the Office recognized the express abandonment in the above-identified application on November 1, 2006.

Initially it is noted that petitioner was notified by the Office of the abandoned status of this application on November 1, 2006, no petition to revive this application was filed until December 15, 2006. That is, while petitioner may not have been aware of the abandoned status of this application until a recent file audit, they were notified of the abandoned status of this application on November 1, 2006.

Petitioner has filed no evidence, which would lead one to reasonably believe that this application was unintentionally abandoned. In this regard, petitioner has failed to submit any evidence of the circumstances surrounding the abandonment of this application. For example, no specific explanation has been given as to how and why a miscommunication regarding this application occurred.

35 U.S.C. § 41(a)(7) applies to the situation of the above-identified application (i.e., to the revival of an abandoned application), however, it precludes the Director from reviving the above-identified application. This is because § 41(a)(7) only authorizes the Director to revive an "unintentionally abandoned application." The legislative history of Public Law 97-247 reveals that the purpose of 35 U.S.C. § 41(a)(7) is to permit the Office to have more discretion than in 35 U.S.C. §§ 133 or 151 to revive abandoned applications in appropriate circumstances, but places a limit on this discretion, stating that "[u]nder this section a petition accompanied by either a fee of $500 or a fee of $50 would not be granted where the abandonment or the failure to pay the fee for issuing the patent was intentional as opposed to being unintentional or unavoidable." [emphasis added]. See H.R. Rep. No. 542, 97th Cong., 2d Sess. 6-7 (1982), reprinted in 1982 U.S.C.C.A.N. 770-71. The revival of an intentionally abandoned application, as this application was, is antithetical to the meaning and intent of the statute and regulation.

35 U.S.C. § 41(a)(7) authorizes the Commissioner to accept a petition "for the revival of an unintentionally abandoned application for a patent." As amended December 1, 1997, 37 CFR 1.137(b)(3) provides that a petition under 37 CFR 1.137(b) must be accompanied by a statement that the delay was unintentional, but provides that "[t]he Commissioner may require additional information where there is a question whether the delay was unintentional." Where there is a question whether the delay was unintentional, the petitioner must meet the burden of establishing that the delay was unintentional within the meaning of 35 U.S.C. § 41(a)(7) and 37 CFR 1.137(b). See In re Application of G, 11 USPQ2d 1378, 1380 (Comm'r Pats. 1989). Here, in view of Express Abandonment of record, there is a question whether the entire delay was unintentional.

Further correspondence with respect to this matter should be addressed as follows:

By mail: Mail Stop PETITIONS
Commissioner for Patents
Post Office Box 1450
Alexandria, VA 22313-1450

By hand: Customer Service Window
Mail Stop Petitions
Randolph Building
401 Dulany Street
Alexandria, VA 22314

By fax: (571) 273-8300
ATTN: Office of Petitions

Telephone inquiries concerning this decision should be directed to the undersigned at (571) 272-3206.

Liana Walsh
Petitions Examiner
Office of Petitions

UNITED STATES PATENT AND TRADEMARK OFFICE

Commissioner for Patents
United States Patent and Trademark Office
P.O. Box 1450
Alexandria, VA 22313-1450
www.uspto.gov

DIEDERIKS & WHITELAW, PLC
12471 DILLINGHAM SQUARE, #301
WOODBRIDGE, VA 22192

COPY MAILED

JUL 24 2008

In re Application of	:	
Contini et al.	:	
Application No. 10/809,333	:	ON PETITION
Filed: March 26, 2004	:	
Attorney Docket No. CON003-108	:	

This is a decision on the petition under 37 CFR 1.137(b), filed December 15, 2006, to revive the above-identified application.

The petition is **DISMISSED**.

Any request for reconsideration of this decision must be submitted within TWO (2) MONTHS from the mail date of this decision. Extensions of time under 37 CFR 1.136(a) are permitted. The reconsideration request should include a cover letter entitled "Renewed Petition under 37 CFR 1.137(b)." This is **not** a final agency decision within the meaning of 5 U.S.C. § 704.

The above-identified application became abandoned in response to the petition under 37 CFR 1.138(c) filed November 1, 2006, requesting express abandonment of the above-identified application. The express abandonment was recognized on November 1, 2006. Accordingly, the above-identified application became abandoned on November 1, 2006.

A grantable petition under 37 CFR 1.137(b) must be accompanied by:

> (1) the required reply, unless previously filed;
> (2) the petition fee as set forth in 37 CFR 1.17(m);
> (3) a statement that the entire delay in filing the required reply from the due date for the reply until the filing of a grantable petition pursuant to 37 CFR 1.137(b) was unintentional; and
> (4) any terminal disclaimer (and fee as set forth in 37 CFR 1.20(d)) required by 37 CFR 1.137(d). Where there is a question as to whether either the abandonment or the delay in filing a petition under 37 CFR 1.137 was unintentional, the Commissioner may require additional information. See MPEP 711.03(c)(III)(C) and (D).

This petition lacks item (3). The showing of record raises questions as to whether the abandonment of this application was unintentional within the meaning of 35 USC 41(a)(7) and 37 CFR 1.137(b).

Petitioner asserts that "a representative for the Applicant filing a Request for Express Abandonment in the wrong case."

MPEP 711.01 states:

> The applicant (acquiesced in by an assignee of record), or the attorney/agent of record, if any, can sign an express abandonment. It is imperative that the attorney or agent of record exercise every precaution in ascertaining that the abandonment of the application is in accordance with the desires and best interests of the applicant prior to signing a letter of express abandonment of a patent application. Moreover, special care should be taken to ensure that the appropriate application is correctly identified in the letter of abandonment.

A thorough review of USPTO records shows that: (1) petitioner filed in the above-identified application, on November 1, 2006, a petition for express abandonment under 37 CFR 1.138(c) and (2) the Office recognized the express abandonment in the above-identified application on November 1, 2006.

Initially it is noted that petitioner was notified by the Office of the abandoned status of this application on November 1, 2006, no petition to revive this application was filed until December 15, 2006. That is, while petitioner may not have been aware of the abandoned status of this application until a recent file audit, they were notified of the abandoned status of this application on November 1, 2006.

Petitioner has filed no evidence, which would lead one to reasonably believe that this application was unintentionally abandoned. In this regard, petitioner has failed to submit any evidence of the circumstances surrounding the abandonment of this application. For example, no specific explanation has been given as to how and why a miscommunication regarding this application occurred.

35 U.S.C. § 41(a)(7) applies to the situation of the above-identified application (i.e., to the revival of an abandoned application), however, it precludes the Director from reviving the above-identified application. This is because § 41(a)(7) only authorizes the Director to revive an "unintentionally abandoned application." The legislative history of Public Law 97-247 reveals that the purpose of 35 U.S.C. § 41(a)(7) is to permit the Office to have more discretion than in 35 U.S.C. §§ 133 or 151 to revive abandoned applications in appropriate circumstances, but places a limit on this discretion, stating that "[u]nder this section a petition accompanied by either a fee of $500 or a fee of $50 would not be granted where the abandonment or the failure to pay the fee for issuing the patent was intentional as opposed to being unintentional or unavoidable." [emphasis added]. See H.R. Rep. No. 542, 97th Cong., 2d Sess. 6-7 (1982), reprinted in 1982 U.S.C.C.A.N. 770-71. The revival of an intentionally abandoned application, as this application was, is antithetical to the meaning and intent of the statute and regulation.

35 U.S.C. § 41(a)(7) authorizes the Commissioner to accept a petition "for the revival of an unintentionally abandoned application for a patent." As amended December 1, 1997, 37 CFR 1.137(b)(3) provides that a petition under 37 CFR 1.137(b) must be accompanied by a statement that the delay was unintentional, but provides that "[t]he Commissioner may require additional information where there is a question whether the delay was unintentional." Where there is a question whether the delay was unintentional, the petitioner must meet the burden of establishing that the delay was unintentional within the meaning of 35 U.S.C. § 41(a)(7) and 37 CFR 1.137(b). See In re Application of G, 11 USPQ2d 1378, 1380 (Comm'r Pats. 1989). Here, in view of Express Abandonment of record, there is a question whether the entire delay was unintentional.

Further correspondence with respect to this matter should be addressed as follows:

By mail:	Mail Stop PETITIONS Commissioner for Patents Post Office Box 1450 Alexandria, VA 22313-1450
By hand:	Customer Service Window Mail Stop Petitions Randolph Building 401 Dulany Street Alexandria, VA 22314
By fax:	(571) 273-8300 ATTN: Office of Petitions

Telephone inquiries concerning this decision should be directed to the undersigned at (571) 272-3206.

Liana Walsh
Petitions Examiner
Office of Petitions

UNITED STATES PATENT AND TRADEMARK OFFICE

Commissioner for Patents
United States Patent and Trademark Office
P.O. Box 1450
Alexandria, VA 22313-1450
www.uspto.gov

DIEDERIKS & WHITELAW, PLC
#301
12471 DILLINGHAM SQUARE
WOODBRIDGE VA 22192

COPY MAILED

APR 2 4 2007

OFFICE OF PETITIONS

ON PETITION

In re Application of	:	
Vincent J. Contini et al	:	
Application No. 10/809,344	:	
Filed: March 26, 2004	:	
Attorney Docket No. CON001-058	:	

This is a decision on the petition under 37 CFR 1.137(b), filed December 15, 2006, to revive the above-identified application.

The petition is **DISMISSED**.

Any request for reconsideration of this decision must be submitted within TWO (2) MONTHS from the mail date of this decision. Extensions of time under 37 CFR 1.136(a) are permitted. The reconsideration request should include a cover letter entitled "Renewed Petition under 37 CFR 1.137(b)." This is **not** final agency action within the meaning of 5 U.S.C. § 704.

A grantable petition under 37 CFR 1.137(b)[1] must be accompanied by: (1) the required reply,[2] unless previously filed; (2) the petition fee as set forth in 37 CFR 1.17(m); (3) a statement that the entire delay in filing the required reply from the due date for the reply until the filing of a grantable petition pursuant to 37 CFR 1.137(b) was unintentional; and (4) any terminal disclaimer (and fee as set forth in 37 CFR 1.20(d)) required by 37 CFR 1.137(c). Where there is a question as to whether either the abandonment or the delay in filing a petition under 37 CFR 1.137 was unintentional, the Commissioner may require additional information. See MPEP 711.03(c)(III)(C) and (D). The instant petition lack(s) item(s) (1).

---

[1] As amended effective December 1, 1997. See Changes to Patent Practice and Procedure; Final Rule Notice, 62 Fed. Reg. 53131, 53194-95 (October 10, 1997), 1203 Off. Gaz. Pat. Office 63, 119-20 (October 21, 1997).

[2] In a nonprovisional application abandoned for failure to prosecute, the required reply may be met by the filing of a continuing application. In an application or patent, abandoned or lapsed for failure to pay the issue fee or any portion thereof, the required reply must be the payment of the issue fee or any outstanding balance thereof.

Petitioner should provide evidence of the circumstances revolving around the error in question as to how and why the above application was expressly abandoned. Was applicant made aware of the filing of the express abandonment? If so, please explain.

Further correspondence with respect to this matter should be addressed as follows:

By mail: Mail Stop PETITIONS
Commissioner for Patents
Post Office Box 1450
Alexandria, VA 22313-1450

By hand: Customer Window located at:

Randolph Building
401 Dulany Street
Alexandria, VA 22314

By fax: (571) 273-8300
ATTN: Office of Petitions

Telephone inquiries concerning this decision should be directed to the undersigned at (571) 272-3208.

Karen Creasy

Karen Creasy
Petitions Examiner
Office of Petitions

UNITED STATES PATENT AND TRADEMARK OFFICE

Commissioner for Patents
United States Patent and Trademark Office
P.O. Box 1450
Alexandria, VA 22313-1450
www.uspto.gov

DIEDERIKS & WHITELAW, PLC
#301
12471 DILLINGHAM SQUARE
WOODBRIDGE VA 22192

COPY MAILED

JAN 17 2008

OFFICE OF PETITIONS

In re Application of :
Vincent J. Contini et al :
Application No. 10/809,344 :
Filed: March 26, 2004 :
Attorney Docket No. CON001-058 :

ON PETITION

This is a decision on the renewed petition under 37 CFR 1.137(b), filed May 10, 2007, to revive the above-identified application.

The petition is **DISMISSED**.

Any request for reconsideration of this decision must be submitted within TWO (2) MONTHS from the mail date of this decision. Extensions of time under 37 CFR 1.136(a) are permitted. The reconsideration request should include a cover letter entitled "Renewed Petition under 37 CFR 1.137(b)." This is **not** final agency action within the meaning of 5 U.S.C. § 704.

A grantable petition under 37 CFR 1.137(b)[1] must be accompanied by: (1) the required reply,[2] unless previously filed; (2) the petition fee as set forth in 37 CFR 1.17(m); (3) a statement that the entire delay in filing the required reply from the due date for the reply until the filing of a grantable petition pursuant to 37 CFR 1.137(b) was unintentional; and (4) any terminal disclaimer (and fee as set forth in 37 CFR 1.20(d)) required by 37 CFR 1.137(c). Where there is a question as to whether either the abandonment or the delay in filing a petition under 37 CFR 1.137 was unintentional, the Commissioner may require additional information. See MPEP 711.03(c)(III)(C) and (D). The instant petition lack(s) item(s) (1).

---

[1] As amended effective December 1, 1997. See Changes to Patent Practice and Procedure; Final Rule Notice, 62 Fed. Reg. 53131, 53194-95 (October 10, 1997), 1203 Off. Gaz. Pat. Office 63, 119-20 (October 21, 1997).

[2] In a nonprovisional application abandoned for failure to prosecute, the required reply may be met by the filing of a continuing application. In an application or patent, abandoned or lapsed for failure to pay the issue fee or any portion thereof, the required reply must be the payment of the issue fee or any outstanding balance thereof.

Petitioner must provide evidentiary evidence which would clearly establish that this case was not the one that was to be abandoned. Further, petitioner must identify the other case(s) that was to be expressly abandoned and provide an explanation as to whether, in fact, the case intended to be expressly abandoned has now been abandoned. If the case intended to have been expressly abandoned has not been expressly abandoned, petitioner must provide an explanation as to why such action has not been taken to effect such express abandonment.

Further correspondence with respect to this matter should be addressed as follows:

By mail: Mail Stop PETITIONS
Commissioner for Patents
Post Office Box 1450
Alexandria, VA 22313-1450

By hand: Customer Window located at:

Randolph Building
401 Dulany Street
Alexandria, VA 22314

By fax: (571) 273-8300
ATTN: Office of Petitions

Telephone inquiries concerning this decision should be directed to the undersigned at (571) 272-3208.

Karen Creasy

Karen Creasy
Petitions Examiner
Office of Petitions

SPE RESPONSE FOR CERTIFICATE OF CORRECTION

Paper No.: _____

DATE : March 27, 2007

TO SPE OF : ART UNIT 2832

SUBJECT : Request for Certificate of Correction on Patent No.: **7145111 B2 – 10/809360**

A response is requested with respect to the accompanying request for a certificate of correction.

Please complete this form and return with file, within **7** days to:
Palm location **7580, Certificates of Correction Branch – South Tower – 9A22**
If response is for an IFW, **return to employee (named below) via PUBSCofC Team in MADRAS.**
With respect to the change(s) requested, correcting Office and/or Applicant's errors, should the patent read as shown in the certificate of correction (COCIN)? No new matter should be introduced, nor should the scope or meaning of the claims be changed.

Thank You For Your Assistance

Elisha Evans
Certificates of Correction Branch
Tel. No. 703-308-9390 EXT 110

The request for issuing the above-identified correction(s) is hereby:
Note your decision on the appropriate box.

- ☒ **Approved** — **All** changes apply.
- ☐ **Approved in Part** — Specify below which changes **do not** apply.
- ☐ **Denied** — State the reasons for denial below.

Comments:

_____

_____

_____

_____

_____

SPE — 3742 Art Unit

UNITED STATES PATENT AND TRADEMARK OFFICE

Commissioner for Patents
United States Patent and Trademark Office
P.O. Box 1450
Alexandria, VA 22313-1450
www.uspto.gov

COPY MAILED
MAY 0 9 2006
OFFICE OF PETITIONS

OLIFF & BERRIDGE
P.O. BOX 19928
ALEXANDRIA VA 22320

In re Application of :
Masahirolshii :
Application No. 10/809,366 :
Filed: March 26, 2004 :
Attorney Docket No. 119087 :

ON PETITION

This is a decision on the petition, filed May 8, 2006, under 37 CFR 1.313(c)(2) to withdraw the above-identified application from issue after payment of the issue fee.

The petition is **GRANTED.**

The above-identified application is withdrawn from issue for consideration of a submission under 37 CFR 1.114 (request for continued examination). See 37 CFR 1.313(c)(2).

Petitioner is advised that the issue fee paid on April 20, 2006,, in the above-identified application cannot be refunded. If, however, the above-identified application is again allowed, petitioner may request that it be applied towards the issue fee required by the new Notice of Allowance.[1]

Telephone inquiries should be directed to the undersigned at (571) 272-3208.

The examiner of Technology Center AU 2859 will consider the request for continued examination under 37 CFR 1.114.

Karen Creasy
Petitions Examiner
Office of Petitions

---

[1] The request to apply the issue fee to the new Notice may be satisfied by completing and returning the new Issue Fee Transmittal Form PTOL-85(b), which includes the following language thereon: "Commissioner for Patents is requested to apply the Issue Fee and Publication Fee (if any) or re-apply any previously paid issue fee to the application identified above." Petitioner is advised that, whether a fee is indicated as being due or not, the Issue Fee Transmittal Form **must** be completed and timely submitted to avoid abandonment. Note the language in bold text on the first page of the Notice of Allowance and Fee(s) Due (PTOL-85).

UNITED STATES PATENT AND TRADEMARK OFFICE

Commissioner for Patents
United States Patent and Trademark Office
P.O. Box 1450
Alexandria, VA 22313-1450
www.uspto.gov

BIRCH STEWART KOLASCH & BIRCH
P.O. BOX 747
FALLS CHURCH, VA 22040-0747

COPY MAILED

APR 01 2009

OFFICE OF PETITIONS

In re Patent No. 7,447,289 :
Issue Date: November 4, 2008 :
Application No. 10/809,374 : ON PETITION
Filed: March 26, 2004 :
Patentee(s): Munehiro Uratani, et. al. :

This is a decision on the request under 37 CFR 3.81[1], filed February 17, 2009, to correct the name of the assignee on the front page of the above-identified patent by way of a Certificate of Correction.

Since the present request complies with the requirements of 37 CFR 3.81, the request is **GRANTED**.

The Certificates of Correction Branch will be notified of this decision granting the petition under 37 CFR 3.81(b) and directing issuance of the requested Certificate of Correction.

Telephone inquiries concerning this decision may be directed to the undersigned at (571) 272-3226. Inquiries regarding the issuance of a Certificate of Correction should be directed to the Certificates of Correction Branch at (703) 305-8309.

Andrea Smith
Petitions Examiner
Office of Petitions

[1] *See* MPEP 1309, subsection II; and Official Gazette of June 22, 2004.

UNITED STATES PATENT AND TRADEMARK OFFICE

Commissioner for Patents
United States Patent and Trademark Office
P.O. Box 1450
Alexandria, VA 22313-1450
www.uspto.gov

BIRCH STEWART KOLASCH & BIRCH
PO BOX 747
FALLS CHURCH, VA 22040-0747

COPY MAILED

MAR 17 2006

OFFICE OF PETITIONS

In re Application of	:	
Atsushi Kumazawa	:	
Application No. 10/809,377	:	ON PETITION
Filed: March 26, 2004	:	
Attorney Docket No. 1602-0185PUS1	:	

This is a decision on the petition under 37 CFR 1.313(c)(1-3), filed March 16, 2006, which is being treated under 37 CFR 1.313(c)(2), to withdraw the above-identified application from issue after payment of the issue fee.

The petition is **GRANTED**.

The above-identified application is withdrawn from issue for consideration of a submission under 37 CFR 1.114 (request for continued examination). See 37 CFR 1.313(c)(2).

Petitioner is advised that the issue fee paid on December 19, 2005 in the above-identified application cannot be refunded. If, however, the above-identified application is again allowed, petitioner may request that it be applied towards the issue fee required by the new Notice of Allowance.[1]

Telephone inquiries should be directed to Wan Laymon at (571) 272-3220.

This matter is being referred to Technology Center AU 3681 for processing of the request for continued examination under 37 CFR 1.114 and for consideration of concurrently filed IDS.

Wan Laymon
Petitions Examiner
Office of Petitions

---

[1] The request to apply the issue fee to the new Notice may be satisfied by completing and returning the new Issue Fee Transmittal Form PTOL-85(b), which includes the following language thereon: "Commissioner for Patents is requested to apply the Issue Fee and Publication Fee (if any) or re-apply any previously paid issue fee to the application identified above." Petitioner is advised that, whether a fee is indicated as being due or not, the Issue Fee Transmittal Form **must** be completed and timely submitted to avoid abandonment. Note the language in bold text on the first page of the Notice of Allowance and Fee(s) Due (PTOL-85).

UNITED STATES PATENT AND TRADEMARK OFFICE

COMMISSIONER FOR PATENTS
UNITED STATES PATENT AND TRADEMARK OFFICE
P.O. BOX 1450
ALEXANDRIA, VA 22313-1450

www.uspto.gov

Date : March 17, 2006

TO : Director, Office of Patent Publication

FROM : Office of the Deputy Commissioner for Patent Examination Policy

COPY MAILED

MAR 17 2006

OFFICE OF PETITIONS

SUBJECT : Withdrawal from Issue of

Applicant(s) : Atsushi Kumazawa
Application No. : 10/809,377
Filed : March 26, 2004

The above-identified application has been assigned Patent No. 7,014,593 and an issue date of March 21, 2006.

It is hereby directed that this application be withdrawn from issue at the request of the applicant. Do not refund the issue fee.

The following erratum should be published in the Official Gazette if the above-identified application is published in the OG of March 21, 2006:

"All reference to Patent No. 7,014,593 to Atsushi Kumazawa of Tokyo, JAPAN for APPARATUS AND METHOD FOR CONTROLLING CLUTCH OF MECHANICAL AUTOMATIC TRANSMISSION appearing in the Official Gazette of March 21, 2006 should be deleted since no patent was granted."

Wan Laymon
Petitions Examiner
Office of Petitions

cc: Paul Harrison
Deneise Boyd
Mary Louise McAskill
Niomi Farmer
Mary E. Johnson (Cookie)
Duane Davis (CDS)
Tamara K. Greene

UNITED STATES PATENT AND TRADEMARK OFFICE

COMMISSIONER FOR PATENTS
UNITED STATES PATENT AND TRADEMARK OFFICE
P.O. BOX 1450
ALEXANDRIA, VA 22313-1450
www.uspto.gov

WELLS ST. JOHN P.S.
601 W. FIRST AVENUE, SUITE 1300
SPOKANE, WA 99201

COPY MAILED

DEC 28 2004

OFFICE OF PETITIONS

In re application of :
Zhongze Wang :
Application No. 10/809,420 : ON PETITION
Filed: March 26, 2004 :
Attorney Docket No. MI22-2534 :

This is a decision on the petition, filed December 17, 2004, under 37 CFR 1.313(c)(3) to withdraw the above-identified application from issue after payment of the issue fee. See 1233 *Official Gazette* 54 (April 11, 2000).

The petition is **GRANTED**.

Petitioner requests that the application be withdrawn from issue to permit abandonment for consideration of an Information Disclosure Statement in a continuing application under 37 CFR 1.53(b).

The application is withdrawn from issue for express abandonment in favor of a continuing application under 37 CFR 1.53(b) deposited on December 17, 2004.

Telephone inquiries regarding this decision may be directed to the undersigned at (571) 272-3204.

The application is being forwarded to the Files Repository.

Sherry D. Brinkley
Petitions Examiner
Office of Petitions
Office of the Deputy Commissioner
for Patent Examination Policy

SPE RESPONSE FOR CERTIFICATE OF CORRECTION

Paper No.:20070419

DATE : April 19, 2007

TO SPE OF : ART UNIT 2861

SUBJECT : Request for Certificate of Correction on Patent No.: 7,119,824

A response is requested with respect to the accompanying request for a certificate of correction.

Please complete this form and return with file, within **7** days to:
Certificates of Correction Branch - PK 3-910
Palm location **7590** - Tel. No. 305-8201

With respect to the change(s) requested, correcting Office and/or Applicant's errors, should the patent read as shown in the certificate of correction? No new matter should be introduced, nor should the scope or meaning of the claims be changed.

Thank You For Your Assistance **Certificates of Correction Branch**

The request for issuing the above-identified correction(s) is hereby:
Note your decision on the appropriate box.

☒ **Approved** **All** changes apply.

☐ **Approved in Part** Specify below which changes **do not** apply.

☐ **Denied** State the reasons for denial below.

Comments:

SPE: Matthew Luu **Art Unit** 2861

04/19/07

PTOL-306 (Rev. 7/03) U.S. DEPARTMENT OF COMMERCE Patent and Trademark Office

All checked OK
HCP 4/19/07

Staple Here Only!

PRINTER'S TRIM LINE

UNITED STATES PATENT AND TRADEMARK OFFICE

CERTIFICATE OF CORRECTION

PATENT NO. : 7,119,824

DATED : October 10, 2006

INVENTOR(S) : Yoshihiro Ishibe

It is certified that error appears in the above-identified patent and that said Letters Patent is hereby corrected as shown below:

COLUMN 7

Line 33, "$\beta M_{(\beta)}$" should read --$\delta M_{(\beta)}$--; and
Line 67, "synchro" should read --synchro- --.

COLUMN 15

Lines 61-64, the equation should read:

$$-- \delta Y_{BD}' = \frac{S_1 L_2}{f_1 f_2} \delta M_{(BD)} --.$$

COLUMN 21

Line 65, "a." should read --α.--

COLUMN 24

Line 1, "slit **9**," should read --slit **14**,--;
Line 4 ,"slit **9**" should read --slit **14**--; and
Line 39, "slit **9**." should read --slit **14**.--.

COLUMN 30

Line 53, "slit **19**" should read --slit **29**--.

COLUMN 33

Line 65, "S_i" should read --S_1--.

COLUMN 35,

Line 55, "claims 1 to 5" should read --claims 1 to 9--.

MAILING ADDRESS OF SENDER:
FITZPATRICK, CELLA, HARPER & SCINTO
30 Rockefeller Plaza
New York, New York 10112-3800
(212) 218-2100 - Telephone
(212) 218-2200 - Facsimile

PATENT NO. 7,119,824

No. of add'l. copies @ 30¢ per page

Form PTO 1050 (Rev. 3-82)
(Form#30)
CA_MAIN 129556 v1

APR 2 - 2007.

Staple Here Only!

PRINTER'S TRIM LINE

UNITED STATES PATENT AND TRADEMARK OFFICE

CERTIFICATE OF CORRECTION

PATENT NO. : 7,119,824

DATED : October 10, 2006

INVENTOR(S) : Yoshihiro Ishibe

It is certified that error appears in the above-identified patent and that said Letters Patent is hereby corrected as shown below:

COLUMN 36

Line 2, "claims 1 to 5" should read --claims 1 to 9--; and
Line 9, "claims 1 to 5" should read --claims 1 to 9--.

COLUMN 38

Line 24, "claims 14 to 16" should read --claims 14 to 18--; and
Line 44 "claims 14 to 16" should read --claims 14 to 18--.

MAILING ADDRESS OF SENDER:
FITZPATRICK, CELLA, HARPER & SCINTO
30 Rockefeller Plaza
New York, New York 10112-3800
(212) 218-2100 - Telephone
(212) 218-2200 - Facsimile

PATENT NO. 7,119,824

No. of add'l. copies @ 30¢ per page

Form PTO 1050 (Rev. 3-82)
(Form#30)
CA_MAIN 129556 v1

APR 2 - 2007

UNITED STATES PATENT AND TRADEMARK OFFICE

Commissioner for Patents
United States Patent and Trademark Office
P.O. Box 1450
Alexandria, VA 22313-1450
www.uspto.gov

MAIL

JUN 2 4 2005

DIRECTOR OFFICE
TECHNOLOGY CENTER 2100

REED SMITH LLP
Suite 1400
3110 Fairview Park Drive
Falls Church VA 22042

In re Application of: MIURA
Application No. 10/809,465
Filed: March 26, 2004
For: STORAGE CONTROLLER AND CONTROL METHOD OF THE SAME

DECISION ON PETITION FOR ACCELERATED EXAMINATION UNDER M.P.E.P.§708.02(VIII)

This is a decision on the petition filed April 28, 2005 under 37 C.F.R. 102(d) and M.P.E.P. § 708.02(VIII): Accelerated Examination, to make the above-identified application special.

The Petition is **GRANTED**.

M.P.E.P. § 708.02, Section VIII which sets out the prerequisites for a grantable petition for Accelerated Examination under 37 C.F.R. § 102(d) states in relevant part:

A new application (one which has not received any examination by the examiner) may be granted special status provided that applicant (and this term includes applicant's attorney or agent) complies with each of the following items:

(a) Submits a petition to make special accompanied by the fee set forth in 37 CFR 1.17(h);

(b) Presents all claims directed to a single invention, or if the Office determines that all the claims presented are not obviously directed to a single invention, will make an election without traverse as a prerequisite to the grant of special status;

(c) Submits a statement(s) that a pre-examination search was made, listing the field of search by class and subclass, publication, Chemical Abstracts, foreign patents, etc. The pre-examination search must be directed to the invention as claimed in the application for which special status is requested. A search made by a foreign patent office satisfies this requirement;

(d) Submits one copy each of the references deemed most closely related to the subject matter encompassed by the claims if said references are not already of record; and

(e) Submits a detailed discussion of the references, which discussion points out, with the particularity required by 37 CFR 1.111 (b) and (c), how the claimed subject matter is patentable over the references.

Petition to Make Special **GRANTED** since all of the requirements for special status under MPEP § 708.02(VIII) have been met.

The application file is being forwarded to the Examiner for accelerated examination in accordance with the procedures set forth in M.P.E.P. §708.02, Section VIII. If the application is subsequently allowed, it will be given priority for printing. See M.P.E.P. §1309.

Brian L. Johnson
Special Program Examiner 6/21/05
Technology Center 2100
Computer Architecture, Software and Information Security
571-272-3595

RP

UNITED STATES PATENT AND TRADEMARK OFFICE

Commissioner for Patents
United States Patent and Trademark Office
P.O. Box 1450
Alexandria, VA 22313-1450
www.uspto.gov

MOTOROLA, INC.
8000 West Sunrise Boulevard
Law Department – MD 1610
Plantation, FL 33322

COPY MAILED

OCT 1 8 2007

OFFICE OF PETITIONS

In re Application of :
Theodore Rappaport et al. :
Application No. 10/809,466 : DECISION ON PETITION
Filed: March 26, 2004 :
Attorney Docket No. 02560035BB :

This is a decision on the petition under the unintentional provisions of 37 CFR 1.137(b), filed September 14, 2007, to revive the above-identified application.

The petition is **GRANTED**.

The application became abandoned for failure to reply in a timely manner to the non-final Office action mailed December 29, 2006, which set a shortened statutory period for reply of three (3) months. No extensions of time under the provisions of 37 CFR 1.136(a) were obtained. Accordingly, the application became abandoned on March 30, 2007. A Notice of Abandonment was mailed on August 14, 2007.

The petition satisfies the requirements of 37 CFR 1.137(b) in that petitioner has supplied (1) the reply in the form of an amendment after non-final, along with a terminal disclaimer with fee of $130.00, (2) the petition fee of $1500.00, and (3) a proper statement of unintentional delay.

Telephone inquiries concerning this decision should be directed to Kimberly Inabinet at (571) 272-4618.

This application is being referred to Technology Center AU 2128 for appropriate action by the Examiner in the normal course of business on the reply received September 14, 2007.

Frances Hicks

Frances Hicks
Petitions Examiner
Office of Petitions

UNITED STATES PATENT AND TRADEMARK OFFICE

Commissioner for Patents
United States Patent and Trademark Office
P.O. Box 1450
Alexandria, VA 22313-1450
www.uspto.gov

BERESKIN AND PARR
SCOTIA PLAZA
40 KING STREET WEST - SUITE 4000
BOX 401
TORONTO, ONTARIO M5H 3Y2
CANADA

COPY MAILED

JAN 21 2005

OFFICE OF PETITIONS

In re Application of Adam Semlyen and Milan Graovac Application No. 10/809,473 Filed: March 26, 2004 For: DIAGNOSIS OF DISEASE BY DETERMINATION OF ELECTRICAL NETWORK PROPERTIES OF A BODY PART	DECISION REFUSING STATUS UNDER 37 CFR 1.47(a)

This is in response to the petition under 37 CFR 1.47(b), filed December 16, 2004 which has been treated as a petition under 37 CFR 1.47(a).[1]

The petition is dismissed.

Rule 47 applicant is given TWO MONTHS from the mailing date of this decision to reply, correcting the below-noted deficiencies. Any reply should be entitled "Request for Reconsideration of Petition Under 37 CFR 1.47(a)," and should only address the deficiencies noted below, except that the reply may include an oath or declaration executed by the non-signing inventor. **FAILURE TO RESPOND WILL RESULT IN ABANDONMENT OF THE APPLICATION.** Any extensions of time will be governed by 37 CFR 1.136(a).

The above-identified application was filed on March 26, 2004 without an executed oath or declaration and naming Adam Semlyen and Milan Graovac as joint inventors.

Accordingly, on June 16, 2004, a "Notice to File Missing Parts of Application" was mailed, requiring an executed oath or declaration, and a surcharge for its late filing.

---

[1] A petition under 37 CFR 1.47(b) is inappropriate in this instance since all but one of the inventors has signed the declaration. A petition under 37 CFR 1.47(b) is only appropriate where none of the inventors will sign, accordingly the petition will be treated as a petition under 37 CFR 1.47(a).

In response, on December 16, 2004, the instant petition and a four (4) month extension of time were filed.

A grantable petition under 37 CFR 1.47(a) requires:

(1) proof that the non-signing inventor cannot be reached or refuses to sign the oath or declaration after having been presented with the application papers (specification, claims and drawings);

(2) an acceptable oath or declaration in compliance with 35 U.S.C. §§ 115 and 116;

(3) the petition fee; and

(4) a statement of the last known address of the non-signing inventor.

Applicant lacks item (1), as set forth above.

As to item (1), applicant appears to demonstrate that the non-signing inventor was only presented with the declaration. Unless the non-signing inventor was presented with a copy of the application papers (specification, claims and drawings), the non-signing inventor could not attest that he has "reviewed and understands the application papers" and therefore could not sign the declaration which he was given. Accordingly, applicant failed to show or provide proof that the inventor has refused to sign the declaration. See MPEP 409.03(d). Petitioner should show that a copy of the application papers was presented to the non-signing inventor, but that he did not respond to, or refused, the request that he sign the oath/declaration in order to show that the inventor has refused to join in the application. The proof of the pertinent events should be made by a statement of someone with first hand knowledge of the events.

Further correspondence with respect to this matter should be addressed as follows:

By mail: Mail Stop Petition
Commissioner for Patents
Box 1450
Alexandria, VA 22313

By FAX: (703) 872-9306
Attn: Office of Petitions

By hand: Customer Service Window
Randolph Building
401 Dulany Street
Alexandria, VA 22314

Telephone inquiries related to this decision should be directed to the undersigned at (571)272-3228.

Edward J. Tannouse
Petitions Attorney
Office of Petitions
United States Patent and Trademark Office

UNITED STATES PATENT AND TRADEMARK OFFICE

Commissioner for Patents
United States Patent and Trademark Office
P.O. Box 1450
Alexandria, VA 22313-1450
www.uspto.gov

YOUNG & THOMPSON
745 SOUTH 23RD STREET
2ND FLOOR
ARLINGTON VA 22202

COPY MAILED

FEB 15 2008

OFFICE OF PETITIONS

In re Application of :
Shigehisa Tamagawa et al. :
Application No. 10/809,500 : ON PETITION
Filed: March 26, 2004 :
Attorney Docket No.: **8015-1028** :

This is a decision on the petition filed January 23, 2008 under 37 CFR 1.137(b), [1] to revive the above-identified application.

The petition is **GRANTED**.

This application became abandoned for failure to timely reply to the non-Final Office Action mailed March 29, 2007. A shortened statutory period of three months was set for replying to the non-Final Office Action. No extensions of time having been requested, this application became abandoned July 2, 2007. Accordingly, a Notice of Abandonment was mailed February 14, 2007.

This matter is being referred to Technology Center 1794 for appropriate action on the amendment filed May 30, 2007.

Telephone inquiries concerning this matter should be directed to the undersigned Petitions Attorney at (571) 272-3212.

Patricia Faison-Ball

Patricia Faison-Ball
Senior Petitions Attorney
Office of Petitions

---

[1] Effective December 1, 1997, the provisions of 37 CFR 1.137(b) now provide that where the delay in reply was unintentional, a petition may be filed to revive an abandoned application or a lapsed patent pursuant to 37 CFR 1.137(b). A grantable petition filed under the provisions of 37 CFR 1.137(b) must be accompanied by:

(1) the required reply, unless previously filed. In a nonprovisional application abandoned for failure to prosecute, the required reply may be met by the filing of a continuing application. In a nonprovisional application filed on or after June 8, 1995, and abandoned for failure to prosecute, the required reply may also be met by the filing of a request for continued examination in compliance with § 1.114. In an application or patent, abandoned or lapsed for failure to pay the issue fee or any portion thereof, the required reply must be the payment of the issue fee or any outstanding balance thereof. In an application abandoned for failure to pay the publication fee, the required reply must include payment of the publication fee.

(2) the petition fee as set forth in 37 CFR 1.17(m);

(3) a statement that the entire delay in filing the required reply from the due date for the reply until the filing of a grantable petition pursuant to 37 CFR 1.137(b) was unintentional. The Commissioner may required additional information where there is a question whether the delay was unintentional; and

(4) any terminal disclaimer (and fee as set forth in 37 CFR 1.20(d)) required pursuant to 37 CFR 1.137(c)).

UNITED STATES PATENT AND TRADEMARK OFFICE

COMMISSIONER FOR PATENTS
UNITED STATES PATENT AND TRADEMARK OFFICE
P.O. BOX 1450
ALEXANDRIA, VA 22313-1450
www.uspto.gov

OBLON, SPIVAK, MCCLELLAND,
MAIER & NEUSTADT, P.C.
1940 DUKE STREET
ALEXANDRIA, VA 22314

COPY MAILED
JUL 01 2005
OFFICE OF PETITIONS

In re Application of :
Yanetti et al. :
Application No. 10/809,514 :
Filed: March 26, 2004 : ON PETITION
Attorney Docket Number: :
250078US23 :

This is a decision on the Petition under 37 CFR 1.182, filed May 18, 2005, to change the order of the names of the inventors.

The Petition is **granted**.

The order of the names of the inventors has been changed as follows:

1. Bill Yanetti
2. Joe Rudisi
3. Dave Kearney
4. Guerry Grune

This application is being referred to Technology Center 1773 for continued examination in due course.

Telephone inquiries concerning this matter should be directed to at (571) 272-3232.

Derek L. Woods
Petitions Attorney
Office of Petitions

UNITED STATES PATENT AND TRADEMARK OFFICE

UNITED STATES DEPARTMENT OF COMMERCE
United States Patent and Trademark Office
Address: COMMISSIONER FOR PATENTS
P.O. Box 1450
Alexandria, Virginia 22313-1450
www.uspto.gov

IBM CORPORATION
INTELLECTUAL PROPERTY LAW
11501 BURNET ROAD
AUSTIN, TX 78758

Mail Date: 04/20/2010

Applicant	: Charles Ray Johns	: DECISION ON REQUEST FOR
Patent Number	: 7657667	: RECALCULATION of PATENT
Issue Date	: 02/02/2010	: TERM ADJUSTMENT IN VIEW
Appliction No	: 10/809,553	: OF WYETH AND NOTICE OF INTENT TO
Filed	: 03/25/2004	: ISSUE CERTIFICATE OF CORRECTION
		:

The Request for Recalculation is **GRANTED** to the extent indicated.

The patent term adjustment has been determined to be **1388** days. The USPTO will *sua sponte* issue a certificate of correction reflecting the amount of PTA days determined by the recalculation.

Prior to the issuance of the certificate of correction, the USPTO will afford patentee an opportunity to be heard and request reconsideration. Accordingly, patentee has **one month or thirty (30) days**, whichever is longer, to file a request for reconsideration of this patent term adjustment calculation. See 35 U.S.C. 154(b)(3)(B)(ii) and 37 CFR 1.322(a)(4). No extensions of time will be granted under 37 CFR 1.136.

Patentee should use document code PET.OP if electronically filing a request for reconsideration of this patent term adjustment calculation. The patentee must also include the information required by 37 CFR 1.705(b)(2) and the fee required by 37 CFR 1.18(e). If patentee does not file a timely request for reconsideration of this patent term adjustment calculation including the information required by 37 CFR 1.705(b)(2) and the fee required by 37 CFR 1.18(e), the USPTO will issue a certificate of correction reflecting the PTA determination noted above.

Patentee should be aware that in order to preserve the right to review in the United States District Court for the District of Columbia of the USPTO patent term adjustment determination, patentee must ensure that he or she also take the steps required under 35 U.S.C. 154(b)(4)(A) in a timely manner. Nothing in the request for recalculation should be construed as providing an alternative time frame for commencing a civil action under 35 U.S.C. 154(b)(4)(A).

Any questions concerning this decision should be directed to the Office of Patent Legal Administration at 571-272-7702.

UNITED STATES PATENT AND TRADEMARK OFFICE

UNITED STATES DEPARTMENT OF COMMERCE
United States Patent and Trademark Office
Address: COMMISSIONER FOR PATENTS
P.O. Box 1450
Alexandria, Virginia 22313-1450
www.uspto.gov

IBM CORPORATION
INTELLECTUAL PROPERTY LAW
11501 BURNET ROAD
AUSTIN, TX 78758

Mail Date: 04/20/2010

Applicant	: Donald J. Yantzi	: DECISION ON REQUEST FOR
Patent Number	: 7650632	: RECALCULATION of PATENT
Issue Date	: 01/19/2010	: TERM ADJUSTMENT IN VIEW
Appliction No	: 10/809,563	: OF WYETH AND NOTICE OF INTENT TO
Filed	: 03/25/2004	: ISSUE CERTIFICATE OF CORRECTION
		:

The Request for Recalculation is **GRANTED** to the extent indicated.

The patent term adjustment has been determined to be **1198** days. The USPTO will *sua sponte* issue a certificate of correction reflecting the amount of PTA days determined by the recalculation.

Prior to the issuance of the certificate of correction, the USPTO will afford patentee an opportunity to be heard and request reconsideration. Accordingly, patentee has **one month or thirty (30) days**, whichever is longer, to file a request for reconsideration of this patent term adjustment calculation. See 35 U.S.C. 154(b)(3)(B)(ii) and 37 CFR 1.322(a)(4). No extensions of time will be granted under 37 CFR 1.136.

Patentee should use document code PET.OP if electronically filing a request for reconsideration of this patent term adjustment calculation. The patentee must also include the information required by 37 CFR 1.705(b)(2) and the fee required by 37 CFR 1.18(e). If patentee does not file a timely request for reconsideration of this patent term adjustment calculation including the information required by 37 CFR 1.705(b)(2) and the fee required by 37 CFR 1.18(e), the USPTO will issue a certificate of correction reflecting the PTA determination noted above.

Patentee should be aware that in order to preserve the right to review in the United States District Court for the District of Columbia of the USPTO patent term adjustment determination, patentee must ensure that he or she also take the steps required under 35 U.S.C. 154(b)(4)(A) in a timely manner. Nothing in the request for recalculation should be construed as providing an alternative time frame for commencing a civil action under 35 U.S.C. 154(b)(4)(A).

Any questions concerning this decision should be directed to the Office of Patent Legal Administration at 571-272-7702.

UNITED STATES PATENT AND TRADEMARK OFFICE

Commissioner for Patents
United States Patent and Trademark Office
P.O. Box 1450
Alexandria, VA 22313-1450
www.uspto.gov

WELSH & KATZ
120 S RIVERSIDE PLAZA
22ND FLOOR
CHICAGO, IL 60606

COPY MAILED

JUL 0 2 2004

OFFICE OF PETITIONS

In re Application of :
Jack Perlman :
Application No. 10/809,574 : NOTICE
Filed: March 25, 2004 :
Attorney Docket No. 9244-91494 :

This is a notice regarding your request for acceptance of a fee deficiency submission under 37 CFR 1.28. On September 1, 1998, the Court of Appeals for the Federal Circuit held that 37 CFR 1.28(c) is the sole provision governing the time for correction of the erroneous payment of the issue fee as a small entity. **See DH Technology v. Synergystex International, Inc. 154 F.3d 1333, 47 USPQ2d 1865 (Fed. Cir. Sept. 1, 1998).**

The Office no longer investigates or rejects original or reissue applications under 37 CFR 1.56. **1098 Off. Gaz. Pat. Office 502 (January 3, 1989)**. Therefore, nothing in this Notice is intended to imply that an investigation was done.

Your fee deficiency submission under 37 CFR 1.28 is hereby **ACCEPTED**.

Inquiries related to this communication should be directed to the Office of Petitions Staff at (703) 305-9285.

This matter is being referred to Technology Center AU 2876.

Wan Laymon
Petitions Examiner
Office of Petitions
Office of the Deputy Commissioner
for Patent Examination Policy

UNITED STATES PATENT AND TRADEMARK OFFICE

UNITED STATES DEPARTMENT OF COMMERCE
United States Patent and Trademark Office
Address: COMMISSIONER FOR PATENTS
P.O. Box 1450
Alexandria, Virginia 22313-1450
www.uspto.gov

PPG INDUSTRIES, INC.
Intellectual Property Department
One PPG Place
Pittsburgh, PA 15272

Mail Date: 04/28/2010

Applicant	: Joseph M. Ferencz	: DECISION ON REQUEST FOR
Patent Number	: 7666338	: RECALCULATION of PATENT
Issue Date	: 02/23/2010	: TERM ADJUSTMENT IN VIEW
Application No	: 10/809,595	: OF WYETH AND NOTICE OF INTENT TO
Filed	: 03/25/2004	: ISSUE CERTIFICATE OF CORRECTION
		:

The Request for Recalculation is **GRANTED** to the extent indicated.

The patent term adjustment has been determined to be **1312** days. The USPTO will *sua sponte* issue a certificate of correction reflecting the amount of PTA days determined by the recalculation.

Prior to the issuance of the certificate of correction, the USPTO will afford patentee an opportunity to be heard and request reconsideration. Accordingly, patentee has **one month or thirty (30) days**, whichever is longer, to file a request for reconsideration of this patent term adjustment calculation. See 35 U.S.C. 154(b)(3)(B)(ii) and 37 CFR 1.322(a)(4). No extensions of time will be granted under 37 CFR 1.136.

Patentee should use document code PET.OP if electronically filing a request for reconsideration of this patent term adjustment calculation. The patentee must also include the information required by 37 CFR 1.705(b)(2) and the fee required by 37 CFR 1.18(e). If patentee does not file a timely request for reconsideration of this patent term adjustment calculation including the information required by 37 CFR 1.705(b)(2) and the fee required by 37 CFR 1.18(e), the USPTO will issue a certificate of correction reflecting the PTA determination noted above.

Patentee should be aware that in order to preserve the right to review in the United States District Court for the District of Columbia of the USPTO patent term adjustment determination, patentee must ensure that he or she also take the steps required under 35 U.S.C. 154(b)(4)(A) in a timely manner. Nothing in the request for recalculation should be construed as providing an alternative time frame for commencing a civil action under 35 U.S.C. 154(b)(4)(A).

Any questions concerning this decision should be directed to the Office of Patent Legal Administration at 571-272-7702.

UNITED STATES PATENT AND TRADEMARK OFFICE

Commissioner for Patents
United States Patent and Trademark Office
P.O. Box 1450
Alexandria, VA 22313-1450
www.uspto.gov

DUANE MORRIS, LLP
968 POSTAL ROAD, SUITE 110
P.O. BOX 90400
ALLENTOWN PA 18109-0400

COPY MAILED

DEC 21 2007

OFFICE OF PETITIONS

In re Patent No. 7,258,313 :

Issue Date: August 21, 2007 :

Application No. 10/809,598 : ON PETITION

Filed: March 24, 2004 :

Attorney Docket No. 6116-0010-01

This is a decision on the petition filed October 30, 2007, which is being treated as a request under 37 CFR 3.81(b)[1] to correct the assignee data on the front page of the above-identified patent by way of a Certificate of Correction.

The request is **granted**.

Telephone inquiries concerning this matter may be directed to the undersigned at (571) 272-3222. Any questions concerning the issuance of the Certificate of Correction should be directed to the Certificate of Correction Branch at (703) 305-8309.

The file is being forwarded to the Certificate of Correction Branch for issuance of the requested Certificate of Correction.

Kenya A. McLaughlin
Petitions Attorney
Office of Petitions

[1] See *Official Gazette* of June 22, 2004.

UNITED STATES PATENT AND TRADEMARK OFFICE

Commissioner for Patents
United States Patent and Trademark Office
P.O. Box 1450
Alexandria, VA 22313-1450
www.uspto.gov

FAY KAPLUN & MARCIN, LLP
150 BROADWAY, SUITE 702
NEW YORK, NY 10038

COPY MAILED

MAR 25 2008

OFFICE OF PETITIONS

In re Application of :
Huayan Amy Wang :
Application No. 10/809,599 : ON PETITION
Filed: March 25, 2004 :
Attorney Docket No. 40146/26401(1611) :

This is a decision on the petition under the unintentional provisions of 37 CFR 1.137(b), filed October 5, 2007, to revive the above-identified application.

The petition is **DISMISSED**.

The application became abandoned for failure to timely reply within the meaning of 37 CFR 1.113 to the final Office action, mailed March 9, 2007, which set a shortened statutory period for reply of three (3) months. No extensions of time under the provisions of 37 CFR 1.136(a) were obtained. Accordingly, the application became abandoned on June 10, 2007.

A grantable petition under 37 CFR 1.137(b) must be accompanied by: (1) the required reply, unless previously filed; (2) the petition fee as set forth in 37 CFR 1.17(m); (3) a statement that the entire delay in filing the required reply from the due date for the reply until the filing of a grantable petition pursuant to 37 CFR 1.137(b) was unintentional; and (4) any terminal disclaimer (and fee as set forth in 37 CFR 1.20(d)) required by 37 CFR 1.137(d). Where there is a question as to whether either the abandonment or the delay in filing a petition under 37 CFR 1.137 was unintentional, the Director may require additional information. See MPEP 711.03(c)(II)(C) and (D). The instant petition lacks item(s) (1).

The reply filed concurrently with the petition to revive does not place the case in condition for allowance. A proper reply required for consideration of a petition to revive must be a Notice of Appeal (and appeal fee required by 37 CFR 41.20(b)(2)), an amendment that prima facie places the application in condition for allowance, a Request for Continued Examination (RCE) and submission (37 CFR 1.114), or the filing of a continuing application under 37 CFR 1.53(b). See MPEP 711.03(c)(II)(A)(2). Since the amendment submitted does not prima facie place the application in condition for allowance, the reply required must be a Notice of Appeal (and appeal fee), RCE, or the filing of a continuing application under 37 CFR 1.53(b).

There is no indication that the person signing the instant petition has power of attorney or has authorization of agent to prosecute the above-identified application. In accordance with 37 CFR 1.34(a), the signature appearing on the petition shall constitute a representation to the United States Patent and Trademark Office that he/she is authorized to represent the particular party in whose behalf he/she acts.

However, if petitioner desires to receive future correspondence regarding this application, the appropriate power of attorney or authorization of agent must be submitted. A courtesy copy of this decision is being mailed to petitioner. Nevertheless, all future correspondence regarding this application file will be directed solely to the address of record until otherwise instructed.

Any request for reconsideration of this decision must be submitted within **TWO (2) MONTHS** from the mail date of this decision. Extensions of time under 37 CFR 1.136(a) are permitted. The reconsideration request should include a cover letter entitled "Renewed Petition under 37 CFR 1.137(b)." This is **not** a final agency action within the meaning of 5 U.S.C. § 704.

Further correspondence with respect to this matter should be addressed as follows:

By Mail: Mail Stop PETITION
Commissioner for Patents
P. O. Box 1450
Alexandria, VA 22313-1450

By hand: U. S. Patent and Trademark Office
Customer Service Window, Mail Stop Petitions
Randolph Building
401 Dulany Street
Alexandria, VA 22314

The centralized facsimile number is **(571) 273-8300.**

Telephone inquiries concerning this decision should be directed to the undersigned at (571) 272-1642.

April M. Wise
Petitions Examiner
Office of Petitions

Attachment: Advisory Action

cc: ROBERT MAIER
BAKER BOTTS, LLP
30 ROCKERFELLER PLAZA
44TH FLOOR
NEW YORK, NY 10112

Advisory Action Before the Filing of an Appeal Brief	Application No. 10/809,599	Applicant(s) WANG, HUAYAN AMY	
	Examiner Zachary A. Davis	Art Unit 2137	

--The MAILING DATE of this communication appears on the cover sheet with the correspondence address --

THE REPLY FILED 05 October 2007 FAILS TO PLACE THIS APPLICATION IN CONDITION FOR ALLOWANCE.

1. ☒ The reply was filed after a final rejection, but prior to or on the same day as filing a Notice of Appeal. To avoid abandonment of this application, applicant must timely file one of the following replies: (1) an amendment, affidavit, or other evidence, which places the application in condition for allowance; (2) a Notice of Appeal (with appeal fee) in compliance with 37 CFR 41.31; or (3) a Request for Continued Examination (RCE) in compliance with 37 CFR 1.114. The reply must be filed within one of the following time periods:
   a) ☒ The period for reply expires 3 months from the mailing date of the final rejection.
   b) ☐ The period for reply expires on: (1) the mailing date of this Advisory Action, or (2) the date set forth in the final rejection, whichever is later. In no event, however, will the statutory period for reply expire later than SIX MONTHS from the mailing date of the final rejection.

   Examiner Note: If box 1 is checked, check either box (a) or (b). ONLY CHECK BOX (b) WHEN THE FIRST REPLY WAS FILED WITHIN TWO MONTHS OF THE FINAL REJECTION. See MPEP 706.07(f).

Extensions of time may be obtained under 37 CFR 1.136(a). The date on which the petition under 37 CFR 1.136(a) and the appropriate extension fee have been filed is the date for purposes of determining the period of extension and the corresponding amount of the fee. The appropriate extension fee under 37 CFR 1.17(a) is calculated from: (1) the expiration date of the shortened statutory period for reply originally set in the final Office action; or (2) as set forth in (b) above, if checked. Any reply received by the Office later than three months after the mailing date of the final rejection, even if timely filed, may reduce any earned patent term adjustment. See 37 CFR 1.704(b).

NOTICE OF APPEAL

2. ☐ The Notice of Appeal was filed on _____. A brief in compliance with 37 CFR 41.37 must be filed within two months of the date of filing the Notice of Appeal (37 CFR 41.37(a)), or any extension thereof (37 CFR 41.37(e)), to avoid dismissal of the appeal. Since a Notice of Appeal has been filed, any reply must be filed within the time period set forth in 37 CFR 41.37(a).

AMENDMENTS

3. ☐ The proposed amendment(s) filed after a final rejection, but prior to the date of filing a brief, will not be entered because
   (a) ☐ They raise new issues that would require further consideration and/or search (see NOTE below);
   (b) ☐ They raise the issue of new matter (see NOTE below);
   (c) ☐ They are not deemed to place the application in better form for appeal by materially reducing or simplifying the issues for appeal; and/or
   (d) ☐ They present additional claims without canceling a corresponding number of finally rejected claims.
   NOTE: _____. (See 37 CFR 1.116 and 41.33(a)).
4. ☐ The amendments are not in compliance with 37 CFR 1.121. See attached Notice of Non-Compliant Amendment (PTOL-324).
5. ☐ Applicant's reply has overcome the following rejection(s): _____.
6. ☐ Newly proposed or amended claim(s) _____ would be allowable if submitted in a separate, timely filed amendment canceling the non-allowable claim(s).
7. ☐ For purposes of appeal, the proposed amendment(s): a) ☐ will not be entered, or b) ☐ will be entered and an explanation of how the new or amended claims would be rejected is provided below or appended.
   The status of the claim(s) is (or will be) as follows:
   Claim(s) allowed: _____.
   Claim(s) objected to: _____.
   Claim(s) rejected: _____.
   Claim(s) withdrawn from consideration: _____.

AFFIDAVIT OR OTHER EVIDENCE

8. ☐ The affidavit or other evidence filed after a final action, but before or on the date of filing a Notice of Appeal will not be entered because applicant failed to provide a showing of good and sufficient reasons why the affidavit or other evidence is necessary and was not earlier presented. See 37 CFR 1.116(e).
9. ☐ The affidavit or other evidence filed after the date of filing a Notice of Appeal, but prior to the date of filing a brief, will not be entered because the affidavit or other evidence failed to overcome all rejections under appeal and/or appellant fails to provide a showing a good and sufficient reasons why it is necessary and was not earlier presented. See 37 CFR 41.33(d)(1).
10. ☐ The affidavit or other evidence is entered. An explanation of the status of the claims after entry is below or attached.

REQUEST FOR RECONSIDERATION/OTHER

11. ☒ The request for reconsideration has been considered but does NOT place the application in condition for allowance because: See Continuation Sheet.
12. ☐ Note the attached Information *Disclosure Statement*(s). (PTO/SB/08) Paper No(s). _____
13. ☒ Other: See Continuation Sheet.

EMMANUEL L. MOISE
SUPERVISORY PATENT EXAMINER

Continuation of 11. does NOT place the application in condition for allowance because: Applicant's arguments are not persuasive.

In reference to the objection to the specification and the rejection of Claims 3-9, 12-17, and 21-35 under 35 U.S.C. 112, second paragraph, Applicant asserts that it is obvious that the version of the standard incorporated by reference into the application would be the version of the standard that was current as of the filing date (pages 2-3 of the present response). However, the Examiner notes that this was not explicitly clear from the specification (again, see page 5, paragraph 0016, of the present specification, where no date is or version is recited), and earlier versions may have been relied upon between original drafting of the application and filing of the application. Applicant also asserts that the citation of or reference to IEEE standards "is a common practice before the USPTO" (page 3 of the present response). In response, the Examiner first notes that, because the facts have not been contested, Applicant appears to have conceded that the IEEE Standards 802.11a, 802.11b, and 802.11g are evolving standards and also that they are trademarks of the IEEE. The Examiner further notes that the fact that the terms appear in other patents, for example, the five patents cited by Applicant, does not have any bearing on the facts of the present application; it is noted that the specifications of those patents may have been enabling for a specific version or date of the specifications, or the prosecution history of those applications as a whole otherwise makes clear the version or dates of the specifications, such that they are rendered definite within the context of the application as a whole. Further, the fact that the terms may appear in other patent specifications or claims does not overcome the rejections as applied in the present application since no clear evidence has been presented in support of the definiteness of the claimed subject matter. Additionally, although Applicant notes that the Macaulay reference, US 2003/0135762, also refers to IEEE 802.11 throughout the specification and claims, the Examiner notes that this document is only a patent application publication and not an issued patent, and it is possible that the use of those terms may have raised objections or rejections in the context of the prosecution of that application, and is therefore entirely moot.

In reference to the objection to the previous amendment under 35 U.S.C. 132(a) as introducing new matter, Applicant argues that "rephrasing" the references to IEEE Standard 802.11 to narrow the references to refer only to amendments a, b, and g does not constitute the addition of new matter, citing MPEP § 2163.07. However, the Examiner notes that section I. of MPEP § 2163.07 states that "a rewording of a passage where the same meaning remains intact is permissible", and in this case, the meaning has not remained intact, but rather is changed by narrowing the definition to encompass only a portion of the specification that was originally recited. Therefore, the narrowing of the definition changes the scope of the disclosure and constitutes new matter, as detailed in the previous Office action.

Regarding the rejection of Claims 1-17 and 19-35 under 35 U.S.C. 103(a) as unpatentable over Macaulay, US 2003/0135762, in view of Hrastar, US 7042852, in response to applicant's arguments against the references individually, one cannot show nonobviousness by attacking references individually where the rejections are based on combinations of references. See In re Keller, 642 F.2d 413, 208 USPQ 871 (CCPA 1981); In re Merck & Co., 800 F.2d 1091, 231 USPQ 375 (Fed. Cir. 1986). Specifically, Applicant argues that the cited portions of Hrastar fail to disclose comparing format of received data packets to a protocol-specified format, for example (see page 4 of the present response). However, Macaulay was relied on to show these features (see page 6 of the previous Office action). The Examiner believes that the combination of Macaulay and Hrastar therefore at least suggests maintaining a state table and comparing the format and state information of received packets to a protocol-specified format and state information in the state table, for the reasons previously cited. Further, in response to applicant's argument that the references fail to show certain features of applicant's invention, it is noted that the features upon which applicant relies (i.e., looking at a WEP flag or protocol version field, see page 5 of the present response) are not recited in the rejected claims. Although the claims are interpreted in light of the specification, limitations from the specification are not read into the claims. See In re Van Geuns, 988 F.2d 1181, 26 USPQ2d 1057 (Fed. Cir. 1993).

Continuation of 13. Other: The Examiner notes that although the present response states that a request for continued examination was filed concurrently with the present response, it does not appear that an RCE was, in fact, received in the present application, nor was there a fee paid for the filing of an RCE.

UNITED STATES PATENT AND TRADEMARK OFFICE

Commissioner for Patents
United States Patent and Trademark Office
P.O. Box 1450
Alexandria, VA 22313-1450
www.uspto.gov

FAY KAPLUN & MARCIN, LLP
150 BROADWAY
SUITE 702
NEW YORK, NY 10038

COPY MAILED

JUL 14 2008

OFFICE OF PETITIONS

In re Application of	:	
Huayan Amy Wang	:	
Application No. 10/809,599	:	DECISION ON PETITION
Filed: March 25, 2004	:	
Attorney Docket No. 40146/26401(1611)	:	

This is a decision on the renewed petition under the unintentional provisions of 37 CFR 1.137(b), filed May 27, 2008, to revive the above-identified application.

The petition is **GRANTED**.

The application became abandoned for failure to timely reply within the meaning of 37 CFR 1.113 to the Final Office action, mailed March 9, 2007, which set a shortened statutory period for reply of three (3) months. No extensions of time under the provisions of 37 CFR 1.136(a) were obtained. Accordingly, the application became abandoned on June 10, 2007.

The petition satisfies the requirements of 37 CFR 1.137(b) in that petitioner has supplied (1) the reply in the form of a Request for Continued Examination (RCE) and fee of $810, and the submission required by 37 CFR 1.114; (2) the petition fee of $1540; and (3) a proper statement of unintentional delay.

Telephone inquiries concerning this decision should be directed to undersigned at (571)272-1642.

This application is being referred to Technology Center AU 2137 for processing of the RCE and for appropriate action by the Examiner in the normal course of business on the amendment submitted in accordance with 37 CFR 1.114.

April M. Wise
Petitions Examiner
Office of Petitions

UNITED STATES PATENT AND TRADEMARK OFFICE

UNITED STATES DEPARTMENT OF COMMERCE
United States Patent and Trademark Office
Address: COMMISSIONER FOR PATENTS
P.O. Box 1450
Alexandria, Virginia 22313-1450
www.uspto.gov

IBM CORPORATION
IPLAW SHCB/40-3
1701 NORTH STREET
ENDICOTT, NY 13760

Mail Date: 04/20/2010

Applicant	: Mary Ellen Siksa	: DECISION ON REQUEST FOR
Patent Number	: 7603314	: RECALCULATION of PATENT
Issue Date	: 10/13/2009	: TERM ADJUSTMENT IN VIEW
Appliction No	: 10/809,662	: OF WYETH AND NOTICE OF INTENT TO
Filed	: 03/25/2004	: ISSUE CERTIFICATE OF CORRECTION
		:

The Request for Recalculation is **GRANTED** to the extent indicated.

The patent term adjustment has been determined to be **1164** days. The USPTO will *sua sponte* issue a certificate of correction reflecting the amount of PTA days determined by the recalculation.

Prior to the issuance of the certificate of correction, the USPTO will afford patentee an opportunity to be heard and request reconsideration. Accordingly, patentee has **one month or thirty (30) days**, whichever is longer, to file a request for reconsideration of this patent term adjustment calculation. See 35 U.S.C. 154(b)(3)(B)(ii) and 37 CFR 1.322(a)(4). No extensions of time will be granted under 37 CFR 1.136.

Patentee should use document code PET.OP if electronically filing a request for reconsideration of this patent term adjustment calculation. The patentee must also include the information required by 37 CFR 1.705(b)(2) and the fee required by 37 CFR 1.18(e). If patentee does not file a timely request for reconsideration of this patent term adjustment calculation including the information required by 37 CFR 1.705(b)(2) and the fee required by 37 CFR 1.18(e), the USPTO will issue a certificate of correction reflecting the PTA determination noted above.

Patentee should be aware that in order to preserve the right to review in the United States District Court for the District of Columbia of the USPTO patent term adjustment determination, patentee must ensure that he or she also take the steps required under 35 U.S.C. 154(b)(4)(A) in a timely manner. Nothing in the request for recalculation should be construed as providing an alternative time frame for commencing a civil action under 35 U.S.C. 154(b)(4)(A).

Any questions concerning this decision should be directed to the Office of Patent Legal Administration at 571-272-7702.

UNITED STATES PATENT AND TRADEMARK OFFICE

Commissioner for Patents
United States Patent and Trademark Office
P.O. Box 1450
Alexandria, VA 22313-1450
www.uspto.gov

CENTURY IP GROUP, INC. [Main]
P.O. BOX 7333
NEWPORT BEACH, CA 92658-7333

COPY MAILED

OCT 21 2009

OFFICE OF PETITIONS

In re Application of	:	
Amit Haller, et al.	:	
Application No. 10/809,663	:	DECISION ON PETITION
Filed: March 25, 2004	:	TO WITHDRAW
Attorney Docket No. 1005-39-01 USP	:	FROM RECORD
	:	

This is a decision on the Request to Withdraw as attorney or agent of record under 37 C.F.R. § 1.36(b), filed September 3, 2009.

The request is **APPROVED**.

A grantable request to withdraw as attorney/agent of record must be signed by every attorney/agent seeking to withdraw or contain a clear indication that one attorney is signing on behalf of another/others.

The request was signed by F. Jason Far-Hadian on behalf of all attorneys of record who are associated with customer No. 42698. All attorneys/agents associated with the Customer Number 42698 have been withdrawn. Applicant is reminded that there is no attorney of record at this time.

The correspondence address of record has been changed and the new correspondence address is the address indicated below.

The application became abandoned for failure to timely respond to the outstanding Office action mailed March 4, 2009.

Telephone inquiries concerning this decision should be directed to undersigned at 571-272-1642. All other inquiries concerning the examination or status of this application should be directed to the Technology Center.

/AMW/
April M. Wise
Petitions Examiner
Office of Petitions

cc: IXI MOBILE (R&D), LTD
PO BOX 2543
17 HA 'TIDHAR ST
RA'ANANA 43665 ISRAEL

UNITED STATES PATENT AND TRADEMARK OFFICE

UNITED STATES DEPARTMENT OF COMMERCE
United States Patent and Trademark Office
Address: COMMISSIONER FOR PATENTS
P.O. Box 1450
Alexandria, Virginia 22313-1450
www.uspto.gov

APPLICATION NUMBER	FILING OR 371(C) DATE	FIRST NAMED APPLICANT	ATTY. DOCKET NO./TITLE
10/809,663	03/25/2004	Amit Haller	1005-39-01 USP

CONFIRMATION NO. 7837

POWER OF ATTORNEY NOTICE

42698
CENTURY IP GROUP, INC. [Main]
P.O. BOX 7333
NEWPORT BEACH, CA 92658-7333

OC000000038259766

Date Mailed: 10/14/2009

NOTICE REGARDING CHANGE OF POWER OF ATTORNEY

This is in response to the Power of Attorney filed 09/03/2009.

- The withdrawal as attorney in this application has been accepted. Future correspondence will be mailed to the new address of record. 37 CFR 1.33.

/amwise/

Office of Data Management, Application Assistance Unit (571) 272-4000, or (571) 272-4200, or 1-888-786-0101

UNITED STATES PATENT AND TRADEMARK OFFICE

Commissioner for Patents
United States Patent and Trademark Office
P.O. Box 1450
Alexandria, VA 22313-1450
www.uspto.gov

Diana L. Roberts
International Business Machines
Intellectual Property Law
11400 Burnet Road
Austin, TX 78758

COPY MAILED

NOV 1 2 2008

OFFICE OF PETITIONS

In re Application of	:	
Kohichi Kamijoh, et. al.	:	
Application No. 10/809,673	:	ON PETITION
Filed: March 25, 2004	:	
Attorney Docket No. JP920030033US1	:	

This is a decision on the petition under 37 CFR 1.137(b), filed September 10, 2008, to revive the above-identified application.

The application became abandoned for failure to respond to the non-final Office action mailed January 8, 2008. A Notice of Abandonment was mailed on August 18, 2008.

The petition satisfies the requirements of 37 CFR 1.137(b) in that petitioner has supplied (1) the reply in the form of an amendment; (2) the petition fee of $1,540; and (3) a proper statement of unintentional delay. Therefore, the petition is **GRANTED**.

This application file is being referred to Technology Center Art Unit 2624 for review of the amendment filed with the instant petition.

Telephone inquiries concerning this decision should be directed to the undersigned at (571) 272-3226.

Andrea Smith
Petitions Examiner
Office of Petitions

10 809 690

SPE RESPONSE FOR CERTIFICATE OF CORRECTION

DATE : 4/1/05

Paper No.: _____

TO SPE OF : ART UNIT 2834

SUBJECT : Request for Certificate of Correction on Patent No.: 6815933

A response is requested with respect to the accompanying request for a certificate of correction.

Please complete this form and return with file, within **7** days to:
Certificates of Correction Branch - PK 3-915
Palm location **7580** - Tel. No. 305-8309

With respect to the change(s) requested, correcting Office and/or Applicant's errors, should the patent read as shown in the certificate of correction? No new matter should be introduced, nor should the scope or meaning of the claims be changed.

Please Check Inventors.

Thank You For Your Assistance

Certificates of Correction Branch

The request for issuing the above-identified correction(s) is hereby:
Note your decision on the appropriate box.

- ☒ **Approved** — **All** changes apply.
- ☐ **Approved in Part** — Specify below which changes **do not** apply.
- ☐ **Denied** — State the reasons for denial below.

Comments:

DARREN SCHUBERG
SUPERVISORY PATENT EXAMINER
TECHNOLOGY CENTER 2800
SPE

2834
Art Unit

PTOL-306 (REV. 7/03)

U.S. DEPARTMENT OF COMMERCE Patent and Trademark Office

UNITED STATES PATENT AND TRADEMARK OFFICE

UNITED STATES DEPARTMENT OF COMMERCE
United States Patent and Trademark Office
Address: COMMISSIONER FOR PATENTS
P.O. Box 1450
Alexandria, Virginia 22313-1450
www.uspto.gov

INTELLECTUAL PROPERTY MANAGEMENT
BOEING MANAGEMENT COMPANY
P.O. BOX 2515
MAIL CODE 110-SD54
SEAL BEACH, CA 90740-1515

Mail Date: 04/20/2010

Applicant	: Daniel L. Nydegger	: DECISION ON REQUEST FOR
Patent Number	: 7614937	: RECALCULATION of PATENT
Issue Date	: 11/10/2009	: TERM ADJUSTMENT IN VIEW
Appliction No	: 10/809,698	: OF WYETH AND NOTICE OF INTENT TO
Filed	: 03/26/2004	: ISSUE CERTIFICATE OF CORRECTION
		:

The Request for Recalculation is **GRANTED** to the extent indicated.

The patent term adjustment has been determined to be **496** days. The USPTO will *sua sponte* issue a certificate of correction reflecting the amount of PTA days determined by the recalculation.

Prior to the issuance of the certificate of correction, the USPTO will afford patentee an opportunity to be heard and request reconsideration. Accordingly, patentee has **one month or thirty (30) days**, whichever is longer, to file a request for reconsideration of this patent term adjustment calculation. See 35 U.S.C. 154(b)(3)(B)(ii) and 37 CFR 1.322(a)(4). No extensions of time will be granted under 37 CFR 1.136.

Patentee should use document code PET.OP if electronically filing a request for reconsideration of this patent term adjustment calculation. The patentee must also include the information required by 37 CFR 1.705(b)(2) and the fee required by 37 CFR 1.18(e). If patentee does not file a timely request for reconsideration of this patent term adjustment calculation including the information required by 37 CFR 1.705(b)(2) and the fee required by 37 CFR 1.18(e), the USPTO will issue a certificate of correction reflecting the PTA determination noted above.

Patentee should be aware that in order to preserve the right to review in the United States District Court for the District of Columbia of the USPTO patent term adjustment determination, patentee must ensure that he or she also take the steps required under 35 U.S.C. 154(b)(4)(A) in a timely manner. Nothing in the request for recalculation should be construed as providing an alternative time frame for commencing a civil action under 35 U.S.C. 154(b)(4)(A).

Any questions concerning this decision should be directed to the Office of Patent Legal Administration at 571-272-7702.

UNITED STATES PATENT AND TRADEMARK OFFICE

COMMISSIONER FOR PATENTS
UNITED STATES PATENT AND TRADEMARK OFFICE
P.O. BOX 1450
ALEXANDRIA, VA 22313-1450
www.uspto.gov
DIW Oct-06

SQUIRE, SANDERS & DEMPSEY L.L.P.
14TH FLOOR
8000 TOWERS CRESCENT
TYSONS CORNER VA 22182

COPY MAILED
OCT 1 1 2006
OFFICE OF PETITIONS

In re Patent No. 7,070,533	:	
Issued: 4 July, 2006	:	
Application No. 10/809,713	:	ON PETITION
Filed: 26 March, 2004	:	
Atty Dckt No. 59558.00025	:	

This is a decision on the petition filed on 20 July, 2006, which is being treated as a request under 37 CFR 3.81(b)[1] to correct the assignee on the front page of the above-identified patent by way of a Certificate of Correction.

The petition is **granted**.

Telephone inquires concerning this matter may be directed to the undersigned at 571.272.3231. Any questions concerning the issuance of the Certificate of Correction should be directed to the Certificates of Correction Branch at 703.305.8309.

It is noted that petitioner submitted $400.00 with the present petition. However, only a processing fee of $130.00 and certificate of correction fee of $100.00 are due. The balance will be credited to counsel's deposit account.

The file is being forwarded to the Certificates of Correction Branch for issuance of the requested Certificate of Correction.

D Wood
Douglas I. Wood
Senior Petitions Attorney
Office of Petitions

[1] See Official Gazette of 22 June, 2004.

UNITED STATES PATENT AND TRADEMARK OFFICE

Commissioner for Patents
United States Patent and Trademark Office
P.O. Box 1450
Alexandria, VA 22313-1450
www.uspto.gov

Paper No. 051305

EDWARDS & ANGELL, LLP
P.O. BOX 55874
BOSTON MA 02205

JUN 2 7 2005

In re Application of:	:	
Desmond R. Lim et al.	:	
Serial No.: 10/809,735	:	DECISION ON REQUEST TO WITHDRAW
Filed: March 25, 2004	:	FROM RECORD
Attorney Docket No.: **58780(47686)**	:	

This is a decision on the request to withdraw as attorney/agent of record under 37 C.F.R. § 1.36, filed March 1, 2005 and supplemental filed March 2, 2005.

A grantable request to withdraw as attorney of record must be signed by every attorney seeking to withdraw or contain a clear indication that one attorney is signing on behalf of others. A request to withdraw will not be approved unless at least thirty (30) days would remain between the date of approval and the later of the expiration date of a time to file a response or the expiration date of the maximum time period, which can be extended under 37 C.F.R. § 1.136(a).

The request meets all the above stated requirements. The request was signed by Howard M. Gitten, on behalf of himself and all the attorneys/agents of record. There is at least thirty (30) days remaining between the date of approval and the later of the expiration date of a time to file a response or the expiration date of the maximum time period.

The request is **APPROVED**.

There are no attorneys of record at this time.

All future communications from the Office will be directed to Glenn E. Davis, at the below address, until otherwise notified by applicant.

Inquiries related to this decision should be directed to Clayton E. LaBalle at (571) 272-1594.

Clayton E. LaBalle, Special Programs Examiner
Technology Center 2800
Semiconductors, Electrical and Optical
Systems and Components

cc: LNL Technologies, Inc.,
c/o Glenn E. Davis
89 Ripley Hill Road
Concord, Massachusetts 01741

UNITED STATES PATENT AND TRADEMARK OFFICE

COMMISSIONER FOR PATENTS
UNITED STATES PATENT AND TRADEMARK OFFICE
P.O. BOX 1450
ALEXANDRIA, VA 22313-1450
www.uspto.gov

TOWNSEND AND TOWNSEND AND CREW, LLP
TWO EMBARCADERO CENTER
EIGHTH FLOOR
SAN FRANCISCO CA 94111-3834

MAIL

FEB 23 2005

DIRECTOR OFFICE
TECHNOLOGY CENTER 2600

In re Application of
Susumu Tsuruta
Application No. 10/809,740
Filed: March 24, 2004
For: **STORAGE CONTROL DEVICE**

DECISION ON PETITION
TO MAKE SPECIAL

This is a decision on the petition filed January 26, 2005 under Manual of Patent Examination Procedure §708.02, VIII requesting accelerated examination.

The petition under Manual of Patent Examination Procedure §708.02, VIII, must:
(1) be filed prior to receiving any examination by the examiner,
(2) be accompanied by the required fee- $130,
(3) the claims should be directed to a single invention (if it is determined that the claims pertain to more than one invention, then applicant will have to make an election without traverse or forfeit accelerated examination status),
(4) state that a pre-examination search was made, and fully discuss the search method employed, such as classes and subclasses searched, publications, Chemical abstracts, patents, etc. A search made by a foreign patent office satisfies this requirement,
(5) be accompanied by a copy of each of the references most closely related to the subject matter encompassed by the claims if said references are not already of record,
(6) fully discuss the references, pointing out with the particularity required by 37 C.F.R. §1.111 (b) and (c), how the claimed subject matter is patentable over the references.

The petitioner meets all the above-listed requirements. Accordingly, the petition is **GRANTED**.

The application will retain its special status throughout its entire prosecution, including any appeal to the Board of Patent Appeals and Interferences, subject only to diligent prosecution by the applicant. The application file is being forwarded to the examiner for appropriate action in due course.

Krista Zele
Special Program Examiner
Technology Center 2600
Communications

UNITED STATES PATENT AND TRADEMARK OFFICE

Commissioner for Patents
United States Patent and Trademark Office
P.O. Box 1450
Alexandria, VA 22313-1450
www.uspto.gov

LOUIS J. WILLE
BRISTOL-MYERS SQUIBB COMPANY
PATENT DEPARTMENT
P O BOX 4000
PRINCETON NJ 08543-4000

COPY MAILED
AUG 0 6 2007
OFFICE OF PETITIONS

In re Application of	:	
Ko, et al.	:	
Application No. 10/809,772	:	DECISION ON PETITION
Filed: March 25, 2004	:	UNDER 37 CFR 1.78(a)(3)
Attorney Docket No. PH 7054 DIV2	:	

This is a decision on the petition under 37 CFR 1.78(a)(3), filed May 16, 2007, to accept an unintentionally delayed claim under 35 U.S.C. §120 for the benefit of priority to the prior-filed nonprovisional application set forth in the concurrently filed amendment.

The petition is **DISMISSED.**

A petition for acceptance of a claim for late priority under 37 CFR 1.78(a)(3) is only applicable to those applications filed on or after November 29, 2000. Further, the petition is appropriate only after the expiration of the period specified in 37 CFR 1.78(a)(2)(ii). In addition, the petition under 37 CFR 1.78(a)(3) must be accompanied by:

(1) the reference required by 35 U.S.C. § 120 and 37 CFR 1.78(a)(2)(i) of the prior-filed application, unless previously submitted;
(2) the surcharge set forth in § 1.17(t); and
(3) a statement that the entire delay between the date the claim was due under 37 CFR 1.78(a)(2)(ii) and the date the claim was filed was unintentional. The Director may require additional information where there is a question whether the delay was unintentional.

The petition does not comply with item (1)

37 CFR 1.78(a)(2)(i) requires that any nonprovisional application claiming the benefit of one or more prior-filed copending nonprovisional applications must contain or be amended to contain a reference to each such prior-filed application, identifying it by application number (consisting of the series code and serial number) and indicating the relationship of the applications. The relationship between the applications is whether the subject application is a continuation,

divisional, or continuation-in-part of a prior-filed nonprovisional application. An example of a proper benefit claim is: "This application is a continuation of Application No. 10/---, filed---." A benefit claim that merely states: "This application claims the benefit of Application No. 10/---, filed---," does not comply with 37 CFR 1.72(a)(2)(i) since the proper relationship, which includes the type of continuing application, is not stated. Also, the status of each nonprovisional parent application (if it is patented or abandoned) should also be indicated, following the filing date of the parent nonprovisional application. *See* MPEP Section 201.11, Reference to Prior Nonprovisional Applications. The amendment fails to comply with the provisions of 37 CFR 1.78(a)(2)(i) and is therefore unacceptable. The amendment provides no relationship between the newly added nonprovisional application and Application no. 09/465,949.

Before the petition under 37 CFR § 1.78(a)(3) can be granted, a renewed petition under 37 CFR § 1.78(a)(3) and an Application Data Sheet or a substitute amendment (complying with 37 CFR 1.121 and 37 CFR 1.76(b)(5)), which states the relationship between Application no. 09/981,833 and Application no. 09/465,949 (and the provisional application), are required.

Further correspondence with respect to this matter should be addressed as follows:

By mail: Mail Stop PETITIONS
Commissioner for Patents
Post Office Box 1450
Alexandria, VA 22313-1450

By hand: Customer Service Window
Mail Stop Petitions
Randolph Building
401 Dulany Street
Alexandria, VA 22314

By fax: (571) 273-8300
ATTN: Office of Petitions

Any questions concerning this matter may be directed to the undersigned at (571) 272-3230.

Shirene Willis Brantley

Shirene Willis Brantley
Senior Petitions Attorney
Office of Petitions

UNITED STATES PATENT AND TRADEMARK OFFICE

Commissioner for Patents
United States Patent and Trademark Office
P.O. Box 1450
Alexandria, VA 22313-1450
www.uspto.gov

LOUIS J. WILLE
BRISTOL-MYERS SQUIBB COMPANY
PATENT DEPARTMENT
P O BOX 4000
PRINCETON NJ 08543-4000

COPY MAILED

SEP 17 2007

OFFICE OF PETITIONS

In re Application of	:	
Ko, et al.	:	
Application No. 10/809,772	:	DECISION ON PETITION
Filed: March 25, 2004	:	UNDER 37 CFR 1.78(a)(3)
Attorney Docket No. PH 7054 DIV2	:	

This is a decision on the reconsideration petition under 37 CFR 1.78(a)(3), filed August 16, 2007, to accept an unintentionally delayed claim under 35 U.S.C. §120 for the benefit of priority to the prior-filed nonprovisional application set forth in the concurrently filed amendment.

The petition is **GRANTED.**

A petition for acceptance of a claim for late priority under 37 CFR 1.78(a)(3) is only applicable to those applications filed on or after November 29, 2000. Further, the petition is appropriate only after the expiration of the period specified in 37 CFR 1.78(a)(2)(ii). In addition, the petition under 37 CFR 1.78(a)(3) must be accompanied by:

(1) the reference required by 35 U.S.C. § 120 and 37 CFR 1.78(a)(2)(i) of the prior-filed application, unless previously submitted;
(2) the surcharge set forth in § 1.17(t); and
(3) a statement that the entire delay between the date the claim was due under 37 CFR 1.78(a)(2)(ii) and the date the claim was filed was unintentional. The Director may require additional information where there is a question whether the delay was unintentional.

All of the above requirements having been satisfied, the late claim for priority under 35 U.S.C. § 120 is accepted as being unintentionally delayed.

The granting of the petition to accept the delayed benefit claim to the prior-filed application under 37 CFR 1.78(a)(3) should not be construed as meaning that this application is entitled to the benefit of the prior-filed application. In order for this application to be entitled to the benefit of the prior-filed application, all other requirements under 35 U.S.C. § 120 and 37

CFR 1.78(a)(1) and (a)(2) must be met. Similarly, the fact that the corrected Filing Receipt accompanying this decision on petition includes the prior-filed application should not be construed as meaning that applicant is entitled to the claim for benefit of priority to the prior-filed application noted thereon. Accordingly, the examiner will, in due course, consider this benefit claim and determine whether the application is entitled to the benefit of the earlier filing date.

A corrected Filing Receipt, which includes the priority claim to the prior-filed nonprovisional application, accompanies this decision on petition.

Any inquiries concerning this decision may be directed to the undersigned at (571) 272-3230. All other inquiries concerning either the examination procedures or status of the application should be directed to the Technology Center.

This application is being forwarded to Technology Center Art Unit 1624 for consideration by the examiner of applicants' entitlement to claim benefit of priority under 35 U.S.C. § 120 to the prior-filed application.

Shirene Willis Brantley

Shirene Willis Brantley
Senior Petitions Attorney
Office of Petitions

ATTACHMENT: Corrected Filing Receipt

UNITED STATES PATENT AND TRADEMARK OFFICE

UNITED STATES DEPARTMENT OF COMMERCE
United States Patent and Trademark Office
Address: COMMISSIONER FOR PATENTS
P.O. Box 1450
Alexandria, Virginia 22313-1450
www.uspto.gov

APPL NO.	FILING OR 371(c) DATE	ART UNIT	FIL FEE REC'D	ATTY.DOCKET NO	TOT CLMS	IND CLMS
10/809,772	03/25/2004	1624	1610	PH 7054 DIV2	50	1

CONFIRMATION NO. 7934

CORRECTED FILING RECEIPT

OC000000025716931

23914
LOUIS J. WILLE
BRISTOL-MYERS SQUIBB COMPANY
PATENT DEPARTMENT
P O BOX 4000
PRINCETON, NJ 08543-4000

Date Mailed: 09/07/2007

Receipt is acknowledged of this nonprovisional patent application. The application will be taken up for examination in due course. Applicant will be notified as to the results of the examination. Any correspondence concerning the application must include the following identification information: the U.S. APPLICATION NUMBER, FILING DATE, NAME OF APPLICANT, and TITLE OF INVENTION. Fees transmitted by check or draft are subject to collection. Please verify the accuracy of the data presented on this receipt. **If an error is noted on this Filing Receipt, please write to the Office of Initial Patent Examination's Filing Receipt Corrections. Please provide a copy of this Filing Receipt with the changes noted thereon. If you received a "Notice to File Missing Parts" for this application, please submit any corrections to this Filing Receipt with your reply to the Notice. When the USPTO processes the reply to the Notice, the USPTO will generate another Filing Receipt incorporating the requested corrections (if appropriate).**

Applicant(s)

Soo S. Ko, Hockessin, DE;
George V. Delucca, Wilmington, DE;
John V. Duncia, Hockessin, DE;
Joseph B. Santella III, Springfield, PA;
Dean A. Wacker, Chadds Ford, PA;

Power of Attorney:

Norbert Reinert--18926
Blair Ferguson--34329
Gerald Boudreaux--35073
Karen Kondrad--38212
Scott Larsen--38532
Mary VanAtten--39408
Maureen O'Brien--42043
Rosemarie Wilk-Orescan--45220

Domestic Priority data as claimed by applicant

This application is a DIV of 09/981,833 10/18/2001 PAT 6,759,411
which is a DIV of 09/465,949 12/17/1999 PAT 6,331,545
which claims benefit of 60/112,714 12/18/1998

Foreign Applications

If Required, Foreign Filing License Granted: 06/12/2004

The country code and number of your priority application, to be used for filing abroad under the Paris Convention, is US10/809,772

Projected Publication Date: Not Applicable

Non-Publication Request: No

Early Publication Request: No

Title

HETEROCYCLIC PIPERIDINES AS MODULATORS OF CHEMOKINE RECEPTOR ACTIVITY

Preliminary Class

514

PROTECTING YOUR INVENTION OUTSIDE THE UNITED STATES

Since the rights granted by a U.S. patent extend only throughout the territory of the United States and have no effect in a foreign country, an inventor who wishes patent protection in another country must apply for a patent in a specific country or in regional patent offices. Applicants may wish to consider the filing of an international application under the Patent Cooperation Treaty (PCT). An international (PCT) application generally has the same effect as a regular national patent application in each PCT-member country. The PCT process **simplifies** the filing of patent applications on the same invention in member countries, but **does not result** in a grant of "an international patent" and does not eliminate the need of applicants to file additional documents and fees in countries where patent protection is desired.

Almost every country has its own patent law, and a person desiring a patent in a particular country must make an application for patent in that country in accordance with its particular laws. Since the laws of many countries differ in various respects from the patent law of the United States, applicants are advised to seek guidance from specific foreign countries to ensure that patent rights are not lost prematurely.

Applicants also are advised that in the case of inventions made in the United States, the Director of the USPTO must issue a license before applicants can apply for a patent in a foreign country. The filing of a U.S. patent application serves as a request for a foreign filing license. The application's filing receipt contains further information and guidance as to the status of applicant's license for foreign filing.

Applicants may wish to consult the USPTO booklet, "General Information Concerning Patents" (specifically, the section entitled "Treaties and Foreign Patents") for more information on timeframes and deadlines for filing foreign patent applications. The guide is available either by contacting the USPTO Contact Center at 800-786-9199, or it can be viewed on the USPTO website at http://www.uspto.gov/web/offices/pac/doc/general/index.html.

For information on preventing theft of your intellectual property (patents, trademarks and copyrights), you may wish to consult the U.S. Government website, http://www.stopfakes.gov. Part of a Department of Commerce initiative, this website includes self-help "toolkits" giving innovators guidance on how to protect intellectual property in specific countries such as China, Korea and Mexico. For questions regarding patent enforcement issues, applicants may call the U.S. Government hotline at 1-866-999-HALT (1-866-999-4158).

LICENSE FOR FOREIGN FILING UNDER
Title 35, United States Code, Section 184
Title 37, Code of Federal Regulations, 5.11 & 5.15

GRANTED

The applicant has been granted a license under 35 U.S.C. 184, if the phrase "IF REQUIRED, FOREIGN FILING LICENSE GRANTED" followed by a date appears on this form. Such licenses are issued in all applications where the conditions for issuance of a license have been met, regardless of whether or not a license may be required as set forth in 37 CFR 5.15. The scope and limitations of this license are set forth in 37 CFR 5.15(a) unless an earlier license has been issued under 37 CFR 5.15(b). The license is subject to revocation upon written notification. The date indicated is the effective date of the license, unless an earlier license of similar scope has been granted under 37 CFR 5.13 or 5.14.

This license is to be retained by the licensee and may be used at any time on or after the effective date thereof unless it is revoked. This license is automatically transferred to any related applications(s) filed under 37 CFR 1.53(d). This license is not retroactive.

The grant of a license does not in any way lessen the responsibility of a licensee for the security of the subject matter as imposed by any Government contract or the provisions of existing laws relating to espionage and the national security or the export of technical data. Licensees should apprise themselves of current regulations especially with respect to certain countries, of other agencies, particularly the Office of Defense Trade Controls, Department of State (with respect to Arms, Munitions and Implements of War (22 CFR 121-128)); the Bureau of Industry and Security, Department of Commerce (15 CFR parts 730-774); the Office of Foreign Assets Control, Department of Treasury (31 CFR Parts 500+) and the Department of Energy.

NOT GRANTED

No license under 35 U.S.C. 184 has been granted at this time, if the phrase "IF REQUIRED, FOREIGN FILING LICENSE GRANTED" DOES NOT appear on this form. Applicant may still petition for a license under 37 CFR 5.12, if a license is desired before the expiration of 6 months from the filing date of the application. If 6 months has lapsed from the filing date of this application and the licensee has not received any indication of a secrecy order under 35 U.S.C. 181, the licensee may foreign file the application pursuant to 37 CFR 5.15(b).

SPE RESPONSE FOR CERTIFICATE OF CORRECTION

Paper No.: _____

DATE : 11-14-08

TO SPE OF : ART UNIT 1624

SUBJECT : Request for Certificate of Correction for Appl. No. 10/809222 Patent No.: 7312222

Please respond to this request for a certificate of correction within 7 days.

FOR IFW FILES:

Please review the requested changes/corrections as shown in the **COCIN** document(s) in the IFW application image. No new matter should be introduced, nor should the scope or meaning of the claims be changed.

Please complete the response (see below) and forward the completed response to scanning using document code **COCX**.

FOR PAPER FILES:

Please review the requested changes/corrections as shown in the attached certificate of correction. Please complete this form (see below) and forward it with the file to:

Certificates of Correction Branch (CofC)
South Tower - 9A22
Palm Location 7580

Discrepancy with claim

E. James
Certificates of Correction Branch
703-308-9390 ext. _____

Thank You For Your Assistance

The request for issuing the above-identified correction(s) is hereby:
Note your decision on the appropriate box.

- ☒ **Approved** — All changes apply.
- ☐ **Approved in Part** — Specify below which changes **do not** apply.
- ☐ **Denied** — State the reasons for denial below.

Comments: _____

JAMES O. WILSON
SUPERVISORY PATENT EXAMINER
TECHNOLOGY CENTER 1600

SPE

1624
Art Unit

UNITED STATES PATENT AND TRADEMARK OFFICE

COMMISSIONER FOR PATENTS
UNITED STATES PATENT AND TRADEMARK OFFICE
P.O. BOX 1450
ALEXANDRIA, VA 22313-1450
www.uspto.gov

MICHELE ZARINELLI
c/o WEST CORPORATION
11808 MIRACLE HILLS DRIVE
MSW11 - LEGAL
OMAHA NE 68154

MAIL

SEP 18 2006

DIRECTOR OFFICE
TECHNOLOGY CENTER 2600

In re Application of
Patti L. McCalmont, et al.
Application No. 10/809,783
Filed: March 24, 2004
US Publication No. 2004/0184584
Published: September 23, 2004
For: **GEOGRAPHIC ROUTING OF EMERGENCY SERVICE CALL CENTER EMERGENCY CALLS**

DECISION RE: PROTEST UNDER 37 C.F.R. § 1.291(a)

The protest filed February 3, 2006 and duplicate copy filed July 13, 2006 under 37 CFR 1.291 were filed after the September 23, 2004 publication date of the application.

Because the protest was filed after publication of the application and is not accompanied by written consent of the applicant, it is untimely and it is not being entered in the application file. The original protest and the duplicate copy submitted by the protestor are being discarded in accordance with MPEP § 1901.06, Protest Filed After Allowance Or The Publication Of The Application, since the original protest included indication of service of copy on applicant.

A review of the file also finds that applicant has submitted an Information Disclosure Statement submitting the prior art from the protest pursuant to 37 CFR 1.97 and 37 CFR 1.56.

Krista Zele
Special Programs Examiner
Technology Center 2600
Communications

UNITED STATES PATENT AND TRADEMARK OFFICE

Commissioner for Patents
United States Patent and Trademark Office
P.O. Box 1450
Alexandria, VA 22313-1450
www.uspto.gov

DENNISON, SCHULTZ & MACDONALD
1727 KING STREET
SUITE 105
ALEXANDRIA VA 22314

COPY MAILED

MAR 2 0 2009

OFFICE OF PETITIONS

In re Application of
Beraud, Jean-Marc
Application No. 10/809,799
Filed: March 26, 2004
Attorney Docket No. 04045

ON PETITION

This is a decision on the petition under 37 CFR 1.181, filed July 14, 2008 and again on December 1, 2008, requesting the withdrawal of the holding of abandonment in the above-identified application and has been so treated.

The petition to withdraw the holding of abandonment is **GRANTED.**

The above-identified application was held abandoned for failure to timely reply to the non-final Office action mailed December 27, 2007, which set a shortened statutory period for reply of three (3) months. A reply was due on or before March 27, 2008. A Notice of Abandonment was mailed on July 10, 2008.

Petitioner states that the reply was in fact timely filed. To support this assertion, petitioner has submitted a copy of the return postcard, which acknowledges receipt by the U.S. Patent and Trademark Office (USTPO) on May 22, 2008 of 1. OA Response; and 2. Request for 2 month EOT. Additionally, petitioner has also supplied a copy of the previously mailed correspondence.

The reply acknowledged as having been received in the USPTO on May 22, 2008 has been located in the application file.

In view of the above, the holding of abandonment is hereby withdrawn and the application restored to pending status.

The $460.00 two-month extension of time fee submitted on May 22, 2008 was refunded back to petitioner's credit card on June 25, 2008, though it is unclear why. Accordingly, the $460.00 extension of time fee will be charged again to petitioner's deposit account as authorized.

A petition to withdraw the holding of abandonment under the provisions of 37 CFR 1.181 does not require a fee and none has been charged.

This matter is being referred to Technology Center AU 3773 for further examination on the merits.

Telephone inquiries concerning this decision should be directed to the undersigned at (571) 272-3206.

Liana Walsh
Petitions Examiner
Office of Petitions

UNITED STATES PATENT AND TRADEMARK OFFICE

Commissioner for Patents
United States Patent and Trademark Office
P.O. Box 1450
Alexandria, VA 22313-1450
www.uspto.gov

MORRISON AND FOERSTER LLP
1650 TYSONS BOULEVARD, SUITE 300
MCLEAN, VA 22102

COPY MAILED

JUN 16 2006

OFFICE OF PETITIONS

In re Application of	:	DECISION ON PETITION
Maslov et al.	:	TO WITHDRAW
Application No. 10/809,808	:	FROM RECORD
Filed: March 26, 2004	:	
Attorney Docket No. 544092000300	:	

This is a decision on the Request to Withdraw as attorney or agent of record under 37 C.F.R. § 1.36(b), filed September 28, 2005.

The request is **NOT APPROVED** as moot.

A review of the file record indicates that the power of attorney to the attorneys associated with Customer Number 25227 has been revoked by the assignee of the entire interest of the patent application. Accordingly, the request to withdraw under 37 C.F.R. § 1.36(b) is moot.

There is an outstanding Office action mailed February 22, 2006 that requires a reply.

All future communications from the Office will continue to be directed to the below-listed address until otherwise notified by applicants.

Telephone inquires concerning this decision should be directed to Petitions Examiner Liana Chase at 571-272- 3206. All other inquires concerning either the examination or status of the application should be directed to the Technology Center.

David Bucci
Petitions Examiner
Office of Petitions

cc:

HELLER EHRMAN WHITE & MCAULIFFE LLP
1717 RHODE ISLAND AVE, NW
WASHINGTON DC 20036-3001

UNITED STATES PATENT AND TRADEMARK OFFICE

Commissioner for Patents
United States Patent and Trademark Office
P.O. Box 1450
Alexandria, VA 22313-1450
www.uspto.gov

NIXON PEABODY, LLP
401 9TH STREET, NW
SUITE 900
WASHINGTON DC 20004-2128

COPY MAILED

JUL 14 2005

OFFICE OF PETITIONS

In re Application of
Kozel et al.
Application No. 10/809,831
Filed: March 26, 2004
Attorney Docket No. 031673-3000

: DECISION ON PETITION
: UNDER 37 CFR 1.78(a)(6)

This is a decision on the renewed petition under 37 CFR 1.78(a)(6), filed June 2, 2005, to accept an unintentionally delayed claim under 35 U.S.C. § 119(e) for the benefit of a prior-filed provisional application.

The petition is **granted**.

A petition under 37 CFR 1.78(a)(6) is only applicable to those applications filed on or after November 29, 2000. Further, the petition is appropriate only after expiration of the period specified in 37 CFR 1.78(a)(5)(ii) and must be filed during the pendency of the nonprovisional application. In addition, the petition must be accompanied by:

(1) the reference required by 35 U.S.C. § 119(e) and 37 CFR 1.78(a)(5)(i) to the prior-filed application, unless previously submitted;
(2) the surcharge set forth in § 1.17(t); and
(3) a statement that the entire delay between the date the claim was due under 37 CFR 1.78(a)(5)(ii) and the date the claim was filed was unintentional. The Commissioner may require additional information where there is a question whether the delay was unintentional.

The instant pending nonprovisional application was filed on March 26, 2004, within twelve months of the filing date of the prior-filed provisional application, Application No. 60/502,533, which was filed on September 12, 2003, and the prior-filed provisional application, Application No. 60/529,625 filed December 16, 2003, for which priority is claimed. A reference to the prior-filed provisional applications has been included in an amendment to the application data sheet filed with the petition.

The instant nonprovisional application was filed after November 29, 2000, and the claim for priority herein is submitted after expiration of the period specified in 37 CFR 1.78(a)(5)(ii). Also, the reference to the prior-filed provisional application was submitted during the pendency of the nonprovisional application for which the benefit is sought. *See* 35 U.S.C. §119(e). Accordingly, having found that the instant petition satisfies the conditions of 37 CFR 1.78(a)(6) for acceptance of an unintentionally delayed claim for priority under 35 U.S.C. §119(e), the petition to accept an unintentionally delayed claim of benefit to prior-filed provisional Application Nos. 60/502,533 and 60/529,625 is granted. Applicant requests reconsideration of the previous decision and correctly notes that the application papers as filed did contain an incorporation statement for the referenced provisional application.

The granting of the petition to accept the delayed benefit claim to the prior-filed application under 37 CFR 1.78(a)(6) should not be construed as meaning that the instant application is entitled to the benefit of the filing date of the prior-filed application. In order for the instant application to be entitled to the benefit of the prior-filed application, all other requirements under 35 U.S.C. §119(e) and 37 CFR 1.78(a)(4) and (a)(5) must be met. Similarly, the fact that the corrected Filing Receipt accompanying this decision on petition includes the prior-filed application should not be construed as meaning that applicant is entitled to the claim for benefit of priority to the prior-filed application noted thereon. Accordingly, the examiner will, in due course, consider this benefit claim and determine whether the instant application is entitled to the benefit of the earlier filing date.

A corrected Filing Receipt, which includes the priority claim to the prior-filed provisional application, accompanies this decision on petition.

Any inquiries concerning this decision may be directed to the undersigned at (571) 272-3217.

The application is being forwarded to Technology Center AU 2141 for appropriate action in due course.

Brian Hearn

Brian Hearn
Petitions Examiner
Office of Petitions
Office of the Deputy Commissioner
for Patent Examination Policy

ATTACHMENT: Corrected Filing Receipt

UNITED STATES PATENT AND TRADEMARK OFFICE

Commissioner for Patents
United States Patent and Trademark Office
P.O. Box 1450
Alexandria, VA 22313-1450
www.uspto.gov

COPY MAILED
AUG 1 8 2006
OFFICE OF PETITIONS

Xu Zhang
Nixon Peabody, LLP
401 9th Street, NW
Washington D.C. 20004-2128

In re Application of	:	
Thomas R. Kozel et al.	:	
Application No. 10/809,831	:	DECISION ON PETITION
Filed: March 26, 2004	:	TO WITHDRAW
Attorney Docket No. 031673-3000	:	FROM RECORD
	:	

This is a decision on the Request to Withdraw as attorney or agent of record under 37 C.F.R. § 1.36(b), filed April 18, 2006.

The request is **NOT APPROVED**.

A grantable request to withdraw as attorney/agent of record must be signed by every attorney/agent seeking to withdraw or contain a clear indication that one attorney is signing on behalf of another/others. A request to withdraw will not be approved unless at least 30 (thirty) days would remain between the date of approval and the later of the expiration date of a time to file a response or the expiration date of the maximum time period which can be extended under 37 C.F.R. § 1.136(a).

The Office cannot approve the request at this time since the reasons provided do not meet any of the conditions under the mandatory or permissive categories enumerated in 37 CFR 10.40. Section 10.40 of Title 37 of the Code of Federal Regulation states, "[a] practitioner shall not withdraw from employment in a proceeding before the Office without permission from the Office[.]" More specifically, 37 CFR 10.40 states, "[i]f paragraph (b) of this section is not applicable, a practitioner may not request permission to withdraw in matter pending before the Office unless such request or such withdrawal is" for one the permissive reasons listed in 37 CFR 10.40(c). The reasons set forth in the request, **change of employer**, do not meet any the conditions set forth in 37 CFR 10.40.

All future communications from the Office will continue to be directed to the above-listed address until otherwise notified by applicant.

Telephone inquiries concerning this decision should be directed to Terri Williams at 571-272- 2991.

David Bucci
Petitions Examiner
Office of Petitions

UNITED STATES PATENT AND TRADEMARK OFFICE

Commissioner for Patents
United States Patent and Trademark Office
P.O. Box 1450
Alexandria, VA 22313-1450
www.uspto.gov

NIXON PEABODY, LLP
401 9TH STREET, NW
SUITE 900
WASHINGTON DC 20004-2128

MAILED

APR 0 8 2009

OFFICE OF PETITIONS

In re Application of	:	
Thomas R. Kozel et al	:	
Application No. 10/809,831	:	DECISION ON REQUEST FOR REFUND
Filed: March 26, 2004	:	AND STATUS UNDER 37 CFR 1.27
Attorney Docket No. 031673-003000	:	

This is a decision on the request for refund and claim of small entity status under 37 CFR 1.27 filed January 29, 2009.

The request for refund is **DISMISSED**.

Applicant request a refund of fees paid in accordance with 37 CFR § 1.26. However, § 1.26(b) is limited by § 1.28(a), which only provides a three month window for refunds of large entity fees. Accordingly, the large entity fees were paid more than three months prior to the request for refund and no refund is appropriate.

Further, small entity status has been accorded to the above application.

Any questions concerning this matter may be directed to the undersigned at (571) 272-3208.

Karen Creasy

Karen Creasy
Petitions Examiner
Office of Petitions

UNITED STATES PATENT AND TRADEMARK OFFICE

Commissioner for Patents
United States Patent and Trademark Office
P.O. Box 1450
Alexandria, VA 22313-1450
www.uspto.gov

UNR/DRI Technology Transfer Office
UNR-DRI Technology Transfer Office, Mail stop 321
1664 N. Virginia St
Reno NV 89557

COPY MAILED
FEB 02 2010

In re Application of	:	
Thomas R. KOZEL et al.	:	
Application No. 10/809,831	:	DECISION ON PETITION
Filed: March 26, 2004	:	
Attorney Docket No. 031673-003000	:	

This is a decision on the petition under the unintentional provisions of 37 CFR 1.137(b), filed December 11, 2009, to revive the above-identified application.

The petition is **GRANTED**.

This application became abandoned for failure to timely pay the issue and publication fees on or before December 09, 2009, as required by the Notice of Allowance and Fee(s) Due, mailed September 09, 2009. Accordingly, the date of abandonment of this application is December 10, 2009.

The petition satisfies the requirements of 37 CFR 1.137(b) in that petitioner has supplied (1) the reply in the form of payment of the issue fee of $755.00 and the publication fee of $300.00, (2) the petition fee of $810.00; and (3) a proper statement of unintentional delay. Accordingly, the issue and publication fees are accepted has being unintentionally delayed.

37 CFR 1.137(b)(3) requires a statement that "the entire delay in filing the required reply from the due date for the reply until the filing of a grantable petition pursuant to 37 CFR 1.137(b) was unintentional." Since the statement appearing in the petition varies from the language required by 37 CFR 1.137(b)(3), the statement is being construed as the required statement. Petitioner must notify the Office if this is **not** a correct reading of the statement appearing in the petition.

Telephone inquiries concerning this decision should be directed to Michelle R. Eason at (571) 272-4231.

This application is being referred to Publishing Division for processing into a patent.

Michelle R. Eason
Paralegal Specialist
Office of Petitions

MODIFIED PTO/SB/44 (07-03)

UNITED STATES PATENT AND TRADEMARK OFFICE

CERTIFICATE OF CORRECTION

PATENT NO: 7,029,285

DATED: April 18, 2006

INVENTOR(S): Takashi ABE

It is certified that error appears in the above-identified patent and that said Letters Patent is hereby corrected as shown below:

Column 8, line 41, after "in the memory bus", insert --110 D --

MAILING ADDRESS OF SENDER:
SUGHRUE MION, PLLC
WASHINGTON OFFICE
23373
CUSTOMER NUMBER

PATENT NO. 7,029,285

No. of additional copies
0

UNITED STATES PATENT AND TRADEMARK OFFICE

COMMISSIONER FOR PATENTS
UNITED STATES PATENT AND TRADEMARK OFFICE
P.O. BOX 1450
ALEXANDRIA, VA 22313-1450
www.uspto.gov

MCDERMOTT WILL & EMERY LLP
600 13TH STREET, N.W.
WASHINGTON, DC 20005-3096

COPY MAILED

FEB 13 2006

OFFICE OF PETITIONS

In re Application of
Nobuhiko Oda, et al.
Application No. 10/809,909
Filed: March 26, 2004
Attorney Docket No.: 57810-094

ON PETITION

This is a decision on the petition, filed February 6, 2006, under 37 CFR 1.313(c)(2) to withdraw the above-identified application from issue after payment of the issue fee.

The petition is **GRANTED**.

The above-identified application is withdrawn from issue for consideration of a submission under 37 CFR 1.114 (request for continued examination). See 37 CFR 1.313(c)(2).

Petitioner is advised that the issue fee paid on December 7, 2005, in the above-identified application cannot be refunded. If, however, the above-identified application is again allowed, petitioner may request that it be applied towards the issue fee required by the new Notice of Allowance. [1]

Telephone inquiries relating to this decision should be directed to the undersigned at (571) 272-3204.

The application is being referred to Technology Center AU 2871 for further processing of the request for continued examination under 37 CFR 1.114.

Sherry D. Brinkley
Petitions Examiner
Office of Petitions

[1]The request to apply the issue fee to the new Notice may be satisfied by completing and returning the new Issue Fee Transmittal Form PTOL-85(b), which includes the following language thereon: "Commissioner for Patents is requested to apply the Issue Fee and Publication Fee (if any) or re-apply any previously paid issue fee to the application identified above." Petitioner is advised that, whether a fee is indicated as being due or not, the Issue Fee Transmittal Form **must** be completed and timely submitted to avoid abandonment. Note the language in bold text on the first page of the Notice of Allowance and Fee(s) Due (PTOL-85).

UNITED STATES PATENT AND TRADEMARK OFFICE

Commissioner for Patents
United States Patent and Trademark Office
P.O. Box 1450
Alexandria, VA 22313-1450
www.uspto.gov

KRATZ, QUINTOS & HANSON, LLP
1420 K Street, N.W.
Suite 400
WASHINGTON DC 20005

MAILED

MAY 12 2009

OFFICE OF PETITIONS

In re Patent No. 7,300,909	:	
Issue Date: November 27, 2007	:	
Application No. 10/809,919	:	ON PETITION
Filed: March 26, 2004	:	
Attorney Docket No. 040156	:	

This is a decision on the Petition Under 37 CFR 1.183, filed December 10, 2007, which is being treated as a request under 37 CFR 3.81(b)[1] to correct the name of an assignee on the front page of the above-identified patent by way of a Certificate of Correction.

The request is **GRANTED**.

Telephone inquiries concerning this decision may be directed to Carl Friedman at (571) 272-6842. Inquiries regarding the issuance of a certificate of correction should be directed to the Certificate of Correction Branch at (571) 272-4200.

The Certificates of Correction Branch will be notified of this decision granting the petition under 37 CFR 3.81(b) and directing issuance of the requested Certificate of Correction.

Carl Friedman
Petitions Examiner
Office of Petitions

[1] *See* MPEP 1309, subsection II; and Official Gazette of June 22, 2004.

SPE RESPONSE FOR CERTIFICATE OF CORRECTION

Paper No.:20090306

DATE : March 12, 2009

TO SPE OF : ART UNIT 3735

SUBJECT : Request for Certificate of Correction on Patent No.: 7,025,719

A response is requested with respect to the accompanying request for a certificate of correction.

Please complete this form and return with file, within **7** days to:
Certificates of Correction Branch - PK 3-910
Palm location **7590** - Tel. No. 305-8201

With respect to the change(s) requested, correcting Office and/or Applicant's errors, should the patent read as shown in the certificate of correction? No new matter should be introduced, nor should the scope or meaning of the claims be changed.

Thank You For Your Assistance **Certificates of Correction Branch**

The request for issuing the above-identified correction(s) is hereby:
Note your decision on the appropriate box.

☒ **Approved** **All** changes apply.

☐ **Approved in Part** Specify below which changes **do not** apply.

☐ **Denied** State the reasons for denial below.

Comments:

SPE: /Charles A. Marmor, II/ **Art Unit** 3735

UNITED STATES PATENT AND TRADEMARK OFFICE

COMMISSIONER OF PATENTS

October 4, 2005

Olga Berson
Hogan & Hartson
2049 Century Park East
Suite 700
Los Angeles, Ca 90067

In re Application of:
Dave S.B. Hoon and Bret Taback
Serial No.: 10/809,965 On Petition
Filing Date: March 25, 2004
For: **DNA MARKERS FOR MANAGEMENT OF CANCER**

In response to the petition received on June 8, 2005, to withdraw the holding of abandonment in the above application.

The petition is Granted.

The above-identified application became abandoned for failure to reply within the meaning of 37 C.D.R 1.113 in a timely manner to the Notice to File Missing Parts of Non Provisional Application mailed June 8, 2004. Which set forth a shortened statutory period for reply of two months. Accordingly, the above-identified application became abandoned August 10, 2004.

The evidence submitted is sufficient to establish that the petitioners did not received the Notice to File Missing Parts of non Provisional Application.

A new Notice to File Missing Parts is enclosed giving applicant two months from October 4, 2005 to respond.

Telephone inquiries concerning this application may be directed to Doshie E. Day (703) 308-3640.

Doshie E. Day
Program Management Assistant
Office of Initial Patent Examination

UNITED STATES PATENT AND TRADEMARK OFFICE

Commissioner for Patents
United States Patent and Trademark Office
P.O. Box 1450
Alexandria, VA 22313-1450
www.uspto.gov

MAILED

SEP 14 2009

OFFICE OF PETITIONS

DUANE MORRIS LLP - Princeton
PO BOX 5203
PRINCETON, NJ 08543-5203

In re Application of Thompson et al. :
Application No. 10/809,979 : Decision on Petition
Filing Date: March 26, 2004 :
Attorney Docket No. Y3422-90701 :

This is a decision on the petition under 37 CFR 1.137(b), filed September 4, 2009, to revive the above-identified application.

The petition is **granted**.

The Office mailed a final Office action on July 17, 2008. The final Office action set a shortened statutory period for reply of three (3) months.

A request for a three-month extension of time, but not a reply to the final Office action, was filed January 16, 2009.

Due to the extension of time, a reply could have been timely filed as late as Tuesday, January 20, 2009.[1] A reply was not filed. As a result, the application became abandoned as of January 21, 2009. A Notice of Abandonment was mailed April 8, 2009.

Application papers were filed and assigned Application No. 12/355,475 on January 16, 2009. The transmittal letter stated the application was a continuation of the instant application. The Office subsequently mailed a Notice stating drawings did not appear to be part of the application as filed and that a filing date would be accorded upon the submission of drawings. Drawings were filed May 11, 2009, and the application has been accorded a filing date of May 11, 2009.

The instant petition requests revival of the application for purposes of copendency with Application No. 10/809,979.

A grantable petition under 37 CFR 1.137(b) must be accompanied by:

(1) The reply required to the outstanding Office action or notice, unless previously filed,

(2) The petition fee,

[1] January 17, 2009, was a Saturday. January 18, 2009, was a Sunday. January 19, 2009, was a federal holiday.

(3) A statement that the entire delay in filing the required reply from the due date for the reply until the filing of a grantable petition pursuant to 37 CFR 1.137(b) was unintentional, and

(4) A terminal disclaimer and fee if the application was filed on or before June 8, 1995 or if the application is a design application.

As to item (1), the requirement for a reply is satisfied by the prior filing of continuing application, Application No. 10/809,979. As stated in 37 CFR 1.137(c), "In a nonprovisional application abandoned for failure to prosecute, the required reply may be met by the filing of a continuing application."

As to item (2), the petition fee of $1,620 has been filed.

As to item (3), petitioner has stated the entire delay in filing the required reply from the due date for the reply until the filing of a grantable petition pursuant to 37 CFR 1.137(b) was unintentional.

As to item (4), a terminal disclaimer is not required because the application was filed after June 8, 1995.

Petitioner has met the requirements to revive the above-identified application pursuant to 37 CFR 1.137(b). Therefore, the petition is granted and the application is revived.

Since this application is being revived for purposes of continuity only and since continuity has been established by this decision reviving the application, the application is again abandoned in favor of Application No. 10/809,979.

Telephone inquiries regarding this communication should be directed to Petitions Attorney Steven Brantley at (571) 272-3203.

Charles Steven Brantley
Senior Petitions Attorney
Office of Petitions

UNITED STATES PATENT AND TRADEMARK OFFICE

Commissioner for Patents
United States Patent and Trademark Office
P.O. Box 1450
Alexandria, VA 22313-1450
www.uspto.gov

COPY MAILED

SEP 17 2009

OFFICE OF PETITIONS

DUANE MORRIS LLP - Princeton
PO BOX 5203
PRINCETON, NJ 08543-5203

In re Application of Thompson et al. :
Application No. 10/809,979 : Decision on Petition
Filing Date: March 26, 2004 :
Attorney Docket No. Y3422-90701 :

This is a corrected decision on the petition under 37 CFR 1.137(b), filed September 4, 2009, to revive the above-identified application. Corrections to the prior decision are italicized in the instant decision.

The petition is **granted**.

The Office mailed a final Office action on July 17, 2008. The final Office action set a shortened statutory period for reply of three (3) months.

A request for a three-month extension of time, but not a reply to the final Office action, was filed January 16, 2009.

Due to the extension of time, a reply could have been timely filed as late as Tuesday, January 20, 2009.[1] A reply was not filed. As a result, the application became abandoned as of January 21, 2009. A Notice of Abandonment was mailed April 8, 2009.

Application papers were filed and assigned Application No. 12/355,475 on January 16, 2009. The transmittal letter stated the application was a continuation of the instant application. The Office subsequently mailed a Notice stating drawings did not appear to be part of the application as filed and that a filing date would be accorded upon the submission of drawings. Drawings were filed May 11, 2009, and the application has been accorded a filing date of May 11, 2009.

The instant petition requests revival of the application for purposes of copendency with Application No. *12/355,475*.

A grantable petition under 37 CFR 1.137(b) must be accompanied by:

(1) The reply required to the outstanding Office action or notice, unless previously filed,

[1] January 17, 2009, was a Saturday. January 18, 2009, was a Sunday. January 19, 2009, was a federal holiday.

(2) The petition fee,
(3) A statement that the entire delay in filing the required reply from the due date for the reply until the filing of a grantable petition pursuant to 37 CFR 1.137(b) was unintentional, and
(4) A terminal disclaimer and fee if the application was filed on or before June 8, 1995 or if the application is a design application.

As to item (1), the requirement for a reply is satisfied by the *filing of* Application No. *12/355,475*. As stated in 37 CFR 1.137(c), "In a nonprovisional application abandoned for failure to prosecute, the required reply may be met by the filing of a continuing application."

As to item (2), the petition fee of $1,620 has been filed.

As to item (3), petitioner has stated the entire delay in filing the required reply from the due date for the reply until the filing of a grantable petition pursuant to 37 CFR 1.137(b) was unintentional.

As to item (4), a terminal disclaimer is not required because the application was filed after June 8, 1995.

Petitioner has met the requirements to revive the above-identified application pursuant to 37 CFR 1.137(b). Therefore, the petition is granted and the application is revived.

Since this application is being revived for purposes of continuity only and since continuity has been established by this decision reviving the application, the application is again abandoned in favor of Application No. *12/355,475*.

Telephone inquiries regarding this communication should be directed to Petitions Attorney Steven Brantley at (571) 272-3203.

Charles Steven Brantley
Senior Petitions Attorney
Office of Petitions

UNITED STATES PATENT AND TRADEMARK OFFICE

Commissioner for Patents
United States Patent and Trademark Office
P.O. Box 1450
Alexandria, VA 22313-1450
www.uspto.gov

MAILED
FROM DIRECTORS OFFICE

SEP 13 2005

TECHNOLOGY CENTER 3600

TIMOTHY E. SIEGEL
1868 KNAPPS ALLEY
SUITE 206
WEST LINN, OR 97068

In re application of Patrick J. Merriman et al. Application No. 10/810,015 Filed: March 26, 2004 For: METHOD OF CREATING A CONCRETE PAVED AREA	: : : : : :	**DECISION ON PETITION TO MAKE SPECIAL (APPLICANT'S AGE)**

This is a decision on the petition submitted on March 26, 2004 under 37 CFR 1.102 (c) to make the above-identified application special under the accelerated examination procedure set forth in MPEP 708.02, Section IV: Applicant's Age.

The petition is **GRANTED** .

An application may be accorded special status upon the filing of a petition providing evidence showing that the applicant is at least 65 years old. Such a showing may be provided by evidence such as a birth certificate or a statement from the applicant.

The evidence submitted with the petition is a declaration signed by Mr. William Merriman indicating that he is at least 65 years of age.

The examiner is directed (1) to make an interference search for possible interfering applications, (2) to promptly examine this application out of turn, and (3) if any interfering application is discovered, to examine such application simultaneously and state in the first official letter of such application that it is being taken out of turn because of a possible interference.

Petitioner is advised that this application will continue to be special, throughout its entire prosecution and pendency, including interference or appeal, if any, only if petitioner makes a prompt ***bona fide*** effort, in response to each Office action, to place the application in condition for allowance, even if it is necessary to conduct an interview with the examiner to accomplish this purpose.

SUMMARY: Petition to Make Special **GRANTED**.

Kenneth J. Dorner
Special Programs Examiner
Technology Center 3600
(571) 272-6587

KJD/dew: 07/28/05

UNITED STATES PATENT AND TRADEMARK OFFICE

Commissioner for Patents
United States Patent and Trademark Office
P.O. Box 1450
Alexandria, VA 22313-1450
www.uspto.gov

SCHWEGMAN, LUNDBERG & WOESSNER / ATMEL
P.O. BOX 2938
MINNEAPOLIS, MN 55402

MAILED

AUG 20 2009

OFFICE OF PETITIONS

In re Application of	:	
Albert S. Weiner	:	
Application No. 10/810,035	:	DECISION GRANTING PETITION
Filed: March 26, 2004	:	UNDER 37 CFR 1.313(c)(2)
Attorney Docket No. 2800.450US1	:	

This is a decision on the petition under 37 CFR 1.313(c)(2), filed August 19, 2009, to withdraw the above-identified application from issue after payment of the issue fee.

The petition is **GRANTED**.

The above-identified application is withdrawn from issue for consideration of a submission under 37 CFR 1.114 (request for continued examination). *See* 37 CFR 1.313(c)(2).

Petitioner is advised that the issue fee paid on July 21, 2009 cannot be refunded. If, however, this application is again allowed, petitioner may request that it be applied towards the issue fee required by the new Notice of Allowance.[1]

Telephone inquiries regarding this decision should be directed to undersigned at (571) 272-1642. All other inquiries regarding the examination or status of this application should be directed to the Technology Center.

This application is being referred to Technology Center AU 2818 for processing of the request for continued examination under 37 CFR 1.114 and for consideration of the concurrently filed information disclosure statement.

/AMW/
April M. Wise
Petitions Examiner
Office of Petitions

---

[1] *The request to apply the issue fee to the new Notice may be satisfied by completing and returning the new Part B – Fee(s) Transmittal Form (along with any balance due at the time of submission). Petitioner is advised that the Issue Fee Transmittal Form must be completed and timely submitted to avoid abandonment of the application.*

UNITED STATES PATENT AND TRADEMARK OFFICE

UNITED STATES DEPARTMENT OF COMMERCE
United States Patent and Trademark Office
Address: COMMISSIONER FOR PATENTS
P.O. Box 1450
Alexandria, Virginia 22313-1450
www.uspto.gov

Workman Nydegger
1000 Eagle Gate Tower
60 East South Temple
Salt Lake City, UT 84111

Mail Date: 04/21/2010

Applicant	: Donald A. Ice	: DECISION ON REQUEST FOR
Patent Number	: 7562804	: RECALCULATION of PATENT
Issue Date	: 07/21/2009	: TERM ADJUSTMENT IN VIEW
Appliction No	: 10/810,040	: OF WYETH
Filed	: 03/26/2004	:
		:

The Patentee's Request for Recalculation is **DISMISSED.**

This Request is deemed ineligible for consideration for one or more of the following reasons:

(A). The patent for which PTA recalculation is requested is either a design or reissue application or is a reexamination proceeding;

(B). The patent for which PTA recalculation is requested resulted from a utility or plant application filed under 35 USC 111(a) before May 29, 2000 and no CPA filed in the application on/after May 29, 2000;

(C). The patent for which PTA recalculation is requested resulted from an international application in which the international filing date was before May 29, 2000 and no CPA filed in the application on/after May 29, 2000;

(D). The patent for which PTA recalculation is requested issued on/after March 2, 2010;

(E). The Request for Recalculation was filed more than 180 days after the grant date of the patent and the request was not filed within two months of a dismissal of a request for reconsideration of the of the patent term under 37 CFR 1.705(d);

(F). The Request for Recalculation is not solely limited to USPTO pre-Wyeth interpretation of 35 U.S.C. 154(b)(2)(A);

or

(G). A civil action was filed pursuant to 35 U.S.C. 154(b)(4)(A)concerning the same patent at issue in this request.

Patentee may file a reply to this decision dismissing the Request for Recalculation. Patentee must file such reply within one month or thirty days, whichever is longer, of the mail date of the decision dismissing the Request for Recalculation. No fee is required if patentee is asserting in the reply that the dismissal for ineligibility is improper.

Patentee should use document code PET.OP if electronically filing a reply to this dismissal. If the USPTO finds that the request was improperly deemed ineligible, the USPTO will mail applicant a recalculation determination.

Patentee should be aware that in order to preserve the right to review in the United States District Court for the District of Columbia of the USPTO patent term adjustment determination, patentee must ensure that he or she also take the steps required under 35 U.S.C. 154(b)(4)(A). Nothing in the request for recalculation should be construed as providing an alternative time frame for commencing a civil action under 35 U.S.C. 154 (b)(4)(A).

Any questions concerning this decision should be directed to the Office of Patent Legal Administration at 571-272-7702.

UNITED STATES PATENT AND TRADEMARK OFFICE

Commissioner for Patents
United States Patent and Trademark Office
P.O. Box 1450
Alexandria, VA 22313-1450
www.uspto.gov

TOWNSEND AND TOWNSEND AND CREW, LLP
TWO EMBARCADERO CENTER
EIGHTH FLOOR
SAN FRANCISCO CA 94111-3834

COPY MAILED

OCT 2 7 2004

OFFICE OF PETITIONS

In re Application of :
Merrem et al. :
Application No. 10/810,047 : ON PETITION
Deposited: March 25, 2004 :
Attorney Docket No.:.14572P- :
060210US :
Title of Invention: PORTABLE :
ELECTRONIC DEVICE PHYSICAL SECURITY
APPARATUS WITH ALARMED CABLE

This is a decision on the Petition for Filing Date filed October 12, 2004, requesting that the above-identified application be accorded the filing date of March 25, 2004.

Application papers in the above-identified application were deposited on March 25, 2004. However, on August 6, 2004, the Office of Initial Patent Examination mailed a "Notice of Incomplete Nonprovisional Application", notifying applicant that the application papers had not been accorded a filing date because the application was deposited without drawings.[1]

In response, 12 sheets of drawings, including figures 1-22 and the present petition were filed on October 12, 2004. The petition contends that the application as filed included 12 sheets of drawings and were described in the original filed specification. In support, the petition is accompanied by a copy of applicants' postcard receipt which acknowledges receipt in the office of 12 sheets of Drawings on March 25, 2004.

Applicants' postcard receipt is prima facie[2] evidence that

---

[1]See 35 U.S.C. 111(a)(4)

[2]A postcard receipt which itemizes and properly identifies the items which are being filed serves as prima facie evidence of receipt in the office of all items listed thereon. See MPEP 503.

drawings were received on March 25, 2004, but no drawings are present in the file. Hence, it is clear that the papers for this application were mishandled by the Office. Therefore, it is concluded that 12 sheets of drawings, including figures 1-22, were received on March 25, 2004, as shown in counsel's file, and later misplaced in the Office.

The petition is Granted. Accordingly, deposit account 20-1430 is being credited with the $130.00 petition fee.

Since the original drawings cannot be located in the Office, the copy of the drawings supplied on October 12, 2004, will be used for processing and examination purposes.

The application will be returned to the Office of Initial Patent Examination for further processing with a **filing date of March 25, 2004**, using the 12 sheets of drawings supplied on October 12, 2004.

Telephone inquiries related to this decision may be directed to the undersigned at (571) 272-3215.

Charlema R. Grant
Petitions Attorney
Office of Petitions

UNITED STATES PATENT AND TRADEMARK OFFICE

COMMISSIONER FOR PATENTS
UNITED STATES PATENT AND TRADEMARK OFFICE
P.O. BOX 1450
ALEXANDRIA, VA 22313-1450
WWW.USPTO.GOV

Paper No. None

MARTINE PENILLA & GENCARELLA, LLP
710 LAKEWAY DRIVE
SUITE 200
SUNNYVALE CA 94085

COPY MAILED
FEB 2 2 2006
OFFICE OF PETITIONS

In re Application of Toshiaki Kakutani Application No. 10/810,062 Filed: March 26, 2004 Attorney Docket No. MIPFP084 Title: TECHNIQUE FOR IMAGE DATA RECORDING	DECISION ON PETITION UNDER 37 C.F.R. §1.181(A)

This is a decision on the petition under 37 C.F.R. §1.181(a) to withdraw the holding of abandonment, filed on August 8, 2005.

The Office regrets the delay is issuing this decision.

The above-identified application became abandoned for failure to reply in a timely manner to the Notice of Missing Parts (notice), mailed September 28, 2004, which set a shortened statutory period for reply of two (2) months. No response was received, and no extensions of time under the provisions of 37 C.F.R. §1.136(a) were requested. Accordingly, the above-identified application became abandoned on November 29, 2004. A Notice of Abandonment was mailed June 10, 2005.

With the present petition, Petitioner has included a declaration, drawings, an English language translation of the specification, claims, and abstract, and a cover sheet which bears a certificate of mailing dated November 29, 2004. It is noted that November 28, 2004 fell on a Sunday.

Considering the facts and circumstances of the delay at issue, as set forth on petition, it is concluded that petitioner has met his burden of establishing that a timely response was timely submitted, pursuant to 37 C.F.R. §1.8.

Accordingly, the petition under 37 C.F.R. §1.181(a) is **GRANTED**. The holding of abandonment is **WITHDRAWN**.

The Office of Initial Patent Examination will be notified of this decision.

The basic filing fee, and the fees associated with the late submission of an oath or declaration and the submission of an English translation have been charged to Petitioner's Deposit Account, as authorized in the petition.

Telephone inquiries regarding *this decision* should be directed to the undersigned at (571) 272-3225. All other inquiries concerning examination procedures or status of the application should be directed to the Technology Center.

Paul Shanoski
Senior Attorney
Office of Petitions
United States Patent and Trademark Office

UNITED STATES PATENT AND TRADEMARK OFFICE

Commissioner for Patents
United States Patent and Trademark Office
P.O. Box 1450
Alexandria, VA 22313-1450
www.uspto.gov

PLANTRONICS, INC.
IP DEPARTMENT/LEGAL
345 ENCINAL STREET
P.O. BOX 635
SANTA CRUZ CA 95060-0635

COPY MAILED

JUL 25 2008

OFFICE OF PETITIONS

In re Application of	:	
Doss et al.	:	
Application No. 10/810,082	:	ON PETITION
Filed: march 26, 2004	:	
Attorney Docket No. 02-1757	:	

This is a decision on the petition under 37 C.F.R. § 1.137(b), filed July 7, 2008, to revive the above-identified application.

The petition is **GRANTED**.

The petition satisfies the requirements of 37 CFR 1.137(b) in that petitioner has supplied (1) the reply in the form of a Corrected Appeal Brief, (2) the petition fee, and (3) a proper statement of unintentional delay.

An extension of time under 37 CFR 1.136 must be filed prior to the expiration of the maximum extendable period for reply. See In re Application of S., 8 USPQ2d 1630, 1631 (Comm'r Pats. 1988). Accordingly, since the $2230.00 extension of time fee submitted with the petition on July 7, 2008 was subsequent to the maximum extendable period for reply, this fee is unnecessary and will be credited to petitioner's deposit account as authorized.

Telephone inquiries concerning this decision should be directed to the undersigned at (571) 272-3206.

This matter is being referred to Technology Center 2615 for further examination on the merits.

Liana Walsh
Petitions Examiner
Office of Petitions

UNITED STATES PATENT AND TRADEMARK OFFICE

Commissioner for Patents
United States Patent and Trademark Office
P.O. Box 1450
Alexandria, VA 22313-1450
www.uspto.gov

LAW OFFICE OF DAVID L. TINGEY
15 SOUTH GRADY WAY, SUITE 336
RENTON WA 98057

MAILED

FEB 27 2009

OFFICE OF PETITIONS

In re Application of
Showalter
Application No.10/810,114
Filed: March 25, 2004
Attorney Docket No. SH-04-01

DECISION ON PETITION

This is a decision on the petition under the unintentional provisions of 37 CFR 1.137(b), filed August 26, 2008, to revive the above-identified application.

The petition is **GRANTED**.

This application became abandoned for failure to timely submit corrected formal drawings on or before July 21, 2008, as required by the Notice of Allowability, mailed April 21, 2008. Accordingly, the date of abandonment of this application is July 22, 2008. A Notice of Abandonment was mailed August 15, 2008.

The petition satisfies the requirements of 37 CFR 1.137(b) in that petitioner has supplied (1) the corrected formal drawings, (2) the petition fee of 770.00; and (3) a proper statement of unintentional delay.

This application is being referred to the Office of Data Management for processing into a patent.

Telephone inquiries concerning this decision should be directed to the undersigned at (571) 272-3215.

Charlema Grant
Petitions Attorney
Office of Petitions

UNITED STATES PATENT AND TRADEMARK OFFICE

Commissioner for Patents
United States Patent and Trademark Office
P.O. Box 1450
Alexandria, VA 22313-1450
www.uspto.gov

ALTERA C/O MOFO SF
425 MARKET STREET
SAN FRANCISCO CA 94105

DEC 05 2005

In re Application of:	:	
SCHLEICHER et al.	:	
Serial No.: 10/810,117	:	DECISION ON REQUEST TO WITHDRAW
Filed: March 25, 2004	:	FROM RECORD
Attorney Docket No.: **308812005700**	:	

This is a decision on the request to withdraw as attorney/agent of record under 37 C.F.R. § 1.36, filed September 09, 2005.

A grantable request to withdraw as attorney of record must be signed by every attorney seeking to withdraw or contain a clear indication that one attorney is signing on behalf of others. A request to withdraw will not be approved unless at least thirty (30) days would remain between the date of approval and the later of the expiration date of a time to file a response or the expiration date of the maximum time period, which can be extended under 37 C.F.R. § 1.136(a).

The request meets all the above stated requirements. The request was signed by Stephen C. Durant, on behalf of himself and all the attorneys/agents of record. There is no outstanding Office action at this time.

The request is **APPROVED**.

All future communications from the Office will be directed to Godfrey Kwan, at the below address, until otherwise notified by applicant.

Inquiries related to this decision should be directed to Jose G. Dees at (571) 272-1569.

Jose G. Dees, Special Programs Examiner
Technology Center 2800
Semiconductors, Electrical and Optical
Systems and Components

cc: GODFREY KWAN
BAYER, WEAVER, THOMAS, LLP
OAKLAND CITY CENTER
500 12TH STREET, SUITE 200
OAKLAND CA 94607

UNITED STATES PATENT AND TRADEMARK OFFICE

COMMISSIONER FOR PATENTS
UNITED STATES PATENT AND TRADEMARK OFFICE
P.O. BOX 1450
ALEXANDRIA, VA 22313-1450
www.uspto.gov

COPY MAILED

MAR 20 2006

OFFICE OF PETITIONS

CARDICA, INC.
900 SAGINAW DRIVE
REDWOOD CITY, CA 94063

In re Application of :
Yencho, et. al : DECISION ON PETITION
Application No. 10/810,170 :
Filed: March 26, 2004 :
Docket No.: 152 :

This is a decision on the petition to revive under 37 CFR 1.181, filed February 14, 2006.

The petition under 37 CFR 1.181 to withdraw the holding of abandonment is hereby **DISMISSED**.

Any request for reconsideration of this decision must be submitted within **TWO (2) MONTHS** from mail date of this decision. Extensions of time under 37 CFR 1.136(a) are permitted. The reconsideration request should include a cover letter entitled "Renewed Petition under 37 CFR 1.181." This is not a final agency decision.

This application became abandoned October 30, 2005 for failure to timely submit a proper reply to the non-final Office action mailed July 29, 2005. Notice of Abandonment was mailed February 8, 2006.

Petitioner asserts non-receipt of the Office communication mailed July 29, 2005.

In the absence of any irregularity in the mailing of the Office communication, there is a strong presumption that the Office communication was properly mailed to practitioner at the address of record. This presumption may be overcome by a showing that the Office communication was not in fact received. The showing required to establish non-receipt of an Office communication must include a statement from the practitioner stating that the Office communication was not received by the practitioner and attesting to the fact that a search of the file jacket and docket records indicates that the Office communication was not received. A copy of the docket record where the non-received Office communication would have been entered had it been received and docketed must be attached to and referenced in practitioner's statement. *See*, MPEP 711.03(c). The showing outlined above may not be sufficient if there are circumstances that point to a conclusion that the Office communication may have been lost after receipt rather than a conclusion that the Office communication was lost in the mail.

Petitioners are advised, however, that where an application becomes abandoned as a consequence of a change of correspondence address (the Office action being mailed to the old, uncorrected address and failing to reach the applicant in sufficient time to permit a timely reply), petitioners are required to establish that due care was taken to adhere to the requirement for prompt notification in each concerned application of the change of address (See, MPEP 601.03), and must include an adequate showing that a timely notification of the change of address was filed in the application concerned, and in a manner reasonably calculated to call attention to the fact that it was a notification of a change of address. See, MPEP 711.03(c).

Office records indicate the Office communication was properly mailed to the correspondence address of record at the time of mailing. Accordingly, there was no irregularity in mailing the Office communication on the part of the United States Patent and Trademark Office as a change of correspondence address was filed August 15, 2005, subsequent to the date of mailing of the Notice.

ALTERNATE VENUE

Petitioners are strongly urged to consider filing a petition stating that the delay was unintentional. Petitioner's attention is directed to 37 CFR 1.137(b) which provides for the revival of an "unintentionally" abandoned application without a showing that the delay in prosecution or in late payment of an issue fee was "unavoidable". An "unintentional" petition under 37 CFR 1.137(b) must be accompanied by the required petition fee and reply.

The filing of a petition under 37 CFR 1.137(b) cannot be intentionally delayed and therefore must be filed promptly. A person seeking revival due to unintentional delay cannot make a statement that the delay was unintentional unless the entire delay, including the delay from the date it was discovered that the application was abandoned until the filing of the petition to revive under 37 CFR 1.137(b), was unintentional. A statement that the delay was unintentional is not appropriate if petitioner intentionally delayed the filing of a petition for revival under 37 CFR 1.137(b).

Further correspondence with respect to this matter should be addressed as follows:

By mail: **Mail Stop Petition**
Commissioner for Patents

P.O. Box 1450
Alexandria, VA 22313-1450

By facsimile: (571) 273-8300

By hand delivery: U.S. Patent and Trademark Office
Customer Window, **Mail Stop Petition**
Randolph Building
401 Dulany Street
Alexandria, VA 22314

Telephone inquiries concerning this decision may be directed to the undersigned at (571) 272-3205.

Alesia M. Brown
Petitions Attorney
Office of Petitions

UNITED STATES PATENT AND TRADEMARK OFFICE

COMMISSIONER FOR PATENTS
UNITED STATES PATENT AND TRADEMARK OFFICE
P.O. BOX 1450
ALEXANDRIA, VA 22313-1450
www.uspto.gov

COPY MAILED

SEP 25 2006

OFFICE OF PETITIONS

CARDICA, INC.
900 SAGINAW DRIVE
REDWOOD CITY, CA 94063

In re Application of	:
Yencho, et. al	: DECISION ON PETITION
Application No. 10/810,170	:
Filed: March 26, 2004	:
Docket No.: 152	:

This is a decision on the renewed petition to withdraw the holding of abandonment under 37 CFR 1.181, filed April 7, 2006.

The petition under 37 CFR 1.181 to withdraw the holding of abandonment is hereby **GRANTED**.

This application was held abandoned October 30, 2005 for failure to timely submit a proper reply to the non-final Office action mailed July 29, 2005. Notice of Abandonment was mailed February 8, 2006.

Petitioner asserts non-receipt of the Office communication mailed July 29, 2005.

In the absence of any irregularity in the mailing of the Office communication, there is a strong presumption that the Office communication was properly mailed to practitioner at the address of record. This presumption may be overcome by a showing that the Office communication was not in fact received. The showing required to establish non-receipt of an Office communication must include a statement from the practitioner stating that the Office communication was not received by the practitioner and attesting to the fact that a search of the file jacket and docket records indicates that the Office communication was not received. A copy of the docket record where the non-received Office communication would have been entered had it been received and docketed must be attached to and referenced in practitioner's statement. *See*, MPEP 711.03(c). The showing outlined above may not be sufficient if there are circumstances that point to a conclusion that the Office communication may have been lost after receipt rather than a conclusion that the Office communication was lost in the mail.

In support of the petition, petitioners have provided a copy of the docket record where the Office communication would have been entered had it been received along with a statement from petitioners that a search of the docket record and file jacket indicated that the Office communication was not received.

In view of the evidence presented, the Notice of Abandonment is hereby **VACATED** and the holding of abandonment is **WITHDRAWN**.

The application file is being forwarded to the technical support staff of Group Art Unit 3731 for mailing of a new Office communication. The time period for response will be set to run from the date a new Office communication is mailed.

Telephone inquiries concerning this decision may be directed to the undersigned at (571) 272-3205.

Alesia M. Brown
Petitions Attorney
Office of Petitions

UNITED STATES PATENT AND TRADEMARK OFFICE

UNITED STATES DEPARTMENT OF COMMERCE
United States Patent and Trademark Office
Address: COMMISSIONER FOR PATENTS
P.O. Box 1450
Alexandria, Virginia 22313-1450
www.uspto.gov

TOWNSEND AND TOWNSEND AND CREW LLP/ORACLE
TWO EMBARCADERO CENTER
8TH FLOOR
SAN FRANCISCO, CA 94111-3834

Mail Date: 04/21/2010

Applicant	: Suchit Kaura	: DECISION ON REQUEST FOR
Patent Number	: 7657529	: RECALCULATION of PATENT
Issue Date	: 02/02/2010	: TERM ADJUSTMENT IN VIEW
Appliction No	: 10/810,174	: OF WYETH AND NOTICE OF INTENT TO
Filed	: 03/26/2004	: ISSUE CERTIFICATE OF CORRECTION
		:

The Request for Recalculation is **GRANTED** to the extent indicated.

The patent term adjustment has been determined to be **294** days. The USPTO will *sua sponte* issue a certificate of correction reflecting the amount of PTA days determined by the recalculation.

Prior to the issuance of the certificate of correction, the USPTO will afford patentee an opportunity to be heard and request reconsideration. Accordingly, patentee has **one month or thirty (30) days**, whichever is longer, to file a request for reconsideration of this patent term adjustment calculation. See 35 U.S.C. 154(b)(3)(B)(ii) and 37 CFR 1.322(a)(4). No extensions of time will be granted under 37 CFR 1.136.

Patentee should use document code PET.OP if electronically filing a request for reconsideration of this patent term adjustment calculation. The patentee must also include the information required by 37 CFR 1.705(b)(2) and the fee required by 37 CFR 1.18(e). If patentee does not file a timely request for reconsideration of this patent term adjustment calculation including the information required by 37 CFR 1.705(b)(2) and the fee required by 37 CFR 1.18(e), the USPTO will issue a certificate of correction reflecting the PTA determination noted above.

Patentee should be aware that in order to preserve the right to review in the United States District Court for the District of Columbia of the USPTO patent term adjustment determination, patentee must ensure that he or she also take the steps required under 35 U.S.C. 154(b)(4)(A) in a timely manner. Nothing in the request for recalculation should be construed as providing an alternative time frame for commencing a civil action under 35 U.S.C. 154(b)(4)(A).

Any questions concerning this decision should be directed to the Office of Patent Legal Administration at 571-272-7702.

UNITED STATES PATENT AND TRADEMARK OFFICE

Commissioner for Patents
United States Patent and Trademark Office
P.O. Box 1450
Alexandria, VA 22313-1450
www.uspto.gov

LYNN A. BUCKNER
P.O. Box 609
Chickamauga GA 30707

COPY MAILED

MAR 3 1 2008

In re Application of	:	
LYNN A. BUCKNER	:	
Application No. 10/810,184	:	DECISION GRANTING PETITION
Filed: March 29, 2004	:	UNDER 37 CFR 1.78(a)(3) and (a)(6)
Attorney Docket No.	:	

This is a decision on the petition under 37 CFR 1.78(a)(3) and (a)(6), filed March 6, 2008, to accept an unintentionally delayed claim under 35 U.S.C. § §119(e) and 120 for the benefit of priority to prior-filed nonprovisional Application No. 10/217,055, filed August 12, 2002 and also claim the benefit of provisional application No. 60/363,058, filed March 11, 2002 and provisional application No. 60/384,719, filed June 3, 2002 via the '055 application.

The petition is **GRANTED**.

A petition for acceptance of a claim for late priority under 37 CFR 1.78(a)(3) and (a)(6) is only applicable to those applications filed on or after November 29, 2000 and after the expiration of the period specified in 37 CFR 1.78(a)(2)(ii) and 1.78(a)(5)(ii). In addition, the petition under 37 CFR 1.78(a)(3) and (a)(6) must be accompanied by:

(1) the reference required by 35 U.S.C. § 120 and 37 CFR 1.78(a)(2)(i) of the prior-filed application, unless previously submitted;

(2) the surcharge set forth in § 1.17(t); and

(3) a statement that the entire delay between the date the claim was due under 37 CFR 1.78(a)(2)(ii) and the date the claim was filed was unintentional. The Director may require additional information where there is a question whether the delay was unintentional.

Additionally, the instant nonprovisional application must be pending at the time of filing of the reference to the prior-filed provisional application as required by 37 CFR 1.78(a)(5)(ii). Further, the nonprovisional application claiming the benefit of the prior-filed provisional application must have been filed within twelve months of the filing date of the prior-filed provisional application.

All the above requirements having been satisfied, the late claim for benefit of priority under 35 U.S.C. §§ 120 and 119(e) is accepted as being unintentionally delayed.

The granting of the petition to accept the delayed benefit claim to the prior-filed applications under 37 CFR §§ 1.78(a)(3) and 1.78(a)(6) should not be construed as meaning that this application is entitled to the benefit of the filing date of the prior-filed applications. In order for this application to be entitled to the benefit of the prior-filed applications, all other requirements under 35 U.S.C. §§120 and 1.78(a)(1) and (a)(2) and under 35 U.S.C. §119(e) and 37 CFR 1.78(a)(4) and (a)(5) must be met. Similarly, the fact that the corrected Filing Receipt accompanying this decision on petition includes the prior-filed applications should not be construed as meaning that applicant is entitled to the claim for benefit of priority to the prior-filed applications noted thereon. Accordingly, the examiner will, in due course, consider this benefit claim and determine whether the application is entitled to the benefit of the earlier filing date.

A corrected Filing Receipt, which includes the priority claim to the prior-filed applications, accompanies this decision on petition.

Any questions concerning this matter may be directed to Anthony Knight at (571) 272-3687. All other inquiries concerning either the examination procedures or status of the application should be directed to the Technology Center.

This application is being forwarded to Technology Center Art Unit 3671 for consideration by the examiner of the claim under 35 U.S.C. § §120 and 119(e) of the prior-filed nonprovisional and provisional applications.

Anthony Knight
Supervisor
Office of Petitions

ATTACHMENT : Corrected Filing Receipt

UNITED STATES PATENT AND TRADEMARK OFFICE

UNITED STATES DEPARTMENT OF COMMERCE
United States Patent and Trademark Office
Address: COMMISSIONER FOR PATENTS
P.O. Box 1450
Alexandria, Virginia 22313-1450
www.uspto.gov

APPLICATION NUMBER	FILING or 371(c) DATE	GRP ART UNIT	FIL FEE REC'D	ATTY.DOCKET.NO	TOT CLAIMS	IND CLAIMS
10/810,184	03/29/2004	3671	640		15	1

CONFIRMATION NO. 7977

CORRECTED FILING RECEIPT

LYNN A. BUCKNER
P.O. Box 609
Chickamauga, GA 30707

OC000000029181407

Date Mailed: 03/31/2008

Receipt is acknowledged of this non-provisional patent application. The application will be taken up for examination in due course. Applicant will be notified as to the results of the examination. Any correspondence concerning the application must include the following identification information: the U.S. APPLICATION NUMBER, FILING DATE, NAME OF APPLICANT, and TITLE OF INVENTION. Fees transmitted by check or draft are subject to collection. Please verify the accuracy of the data presented on this receipt. **If an error is noted on this Filing Receipt, please write to the Office of Initial Patent Examination's Filing Receipt Corrections. Please provide a copy of this Filing Receipt with the changes noted thereon. If you received a "Notice to File Missing Parts" for this application, please submit any corrections to this Filing Receipt with your reply to the Notice. When the USPTO processes the reply to the Notice, the USPTO will generate another Filing Receipt incorporating the requested corrections**

Applicant(s)

Lynn A. Buckner, Chickamauga, GA;

Power of Attorney: None

Domestic Priority data as claimed by applicant

This application is a CIP of 10/217,055 08/12/2002 PAT 6,988,568
which is a CIP of 09/722,797 11/27/2000 PAT 6,453,584

Foreign Applications

If Required, Foreign Filing License Granted: 06/07/2004

The country code and number of your priority application, to be used for filing abroad under the Paris Convention, is **US 10/810,184**

Projected Publication Date: Not Applicable

Non-Publication Request: No

Early Publication Request: No
**** SMALL ENTITY ****

Title

Inclined Slope Vacuum Excavation Container

Preliminary Class

037

PROTECTING YOUR INVENTION OUTSIDE THE UNITED STATES

Since the rights granted by a U.S. patent extend only throughout the territory of the United States and have no effect in a foreign country, an inventor who wishes patent protection in another country must apply for a patent in a specific country or in regional patent offices. Applicants may wish to consider the filing of an international application under the Patent Cooperation Treaty (PCT). An international (PCT) application generally has the same effect as a regular national patent application in each PCT-member country. The PCT process **simplifies** the filing of patent applications on the same invention in member countries, but **does not result** in a grant of "an international patent" and does not eliminate the need of applicants to file additional documents and fees in countries where patent protection is desired.

Almost every country has its own patent law, and a person desiring a patent in a particular country must make an application for patent in that country in accordance with its particular laws. Since the laws of many countries differ in various respects from the patent law of the United States, applicants are advised to seek guidance from specific foreign countries to ensure that patent rights are not lost prematurely.

Applicants also are advised that in the case of inventions made in the United States, the Director of the USPTO must issue a license before applicants can apply for a patent in a foreign country. The filing of a U.S. patent application serves as a request for a foreign filing license. The application's filing receipt contains further information and guidance as to the status of applicant's license for foreign filing.

Applicants may wish to consult the USPTO booklet, "General Information Concerning Patents" (specifically, the section entitled "Treaties and Foreign Patents") for more information on timeframes and deadlines for filing foreign patent applications. The guide is available either by contacting the USPTO Contact Center at 800-786-9199, or it can be viewed on the USPTO website at http://www.uspto.gov/web/offices/pac/doc/general/index.html.

For information on preventing theft of your intellectual property (patents, trademarks and copyrights), you may wish to consult the U.S. Government website, http://www.stopfakes.gov. Part of a Department of Commerce initiative, this website includes self-help "toolkits" giving innovators guidance on how to protect intellectual property in specific countries such as China, Korea and Mexico. For questions regarding patent enforcement issues, applicants may call the U.S. Government hotline at 1-866-999-HALT (1-866-999-4158).

LICENSE FOR FOREIGN FILING UNDER

Title 35, United States Code, Section 184

Title 37, Code of Federal Regulations, 5.11 & 5.15

GRANTED

The applicant has been granted a license under 35 U.S.C. 184, if the phrase "IF REQUIRED, FOREIGN FILING LICENSE GRANTED" followed by a date appears on this form. Such licenses are issued in all applications where the conditions for issuance of a license have been met, regardless of whether or not a license may be required as

set forth in 37 CFR 5.15. The scope and limitations of this license are set forth in 37 CFR 5.15(a) unless an earlier license has been issued under 37 CFR 5.15(b). The license is subject to revocation upon written notification. The date indicated is the effective date of the license, unless an earlier license of similar scope has been granted under 37 CFR 5.13 or 5.14.

This license is to be retained by the licensee and may be used at any time on or after the effective date thereof unless it is revoked. This license is automatically transferred to any related applications(s) filed under 37 CFR 1.53(d). This license is not retroactive.

The grant of a license does not in any way lessen the responsibility of a licensee for the security of the subject matter as imposed by any Government contract or the provisions of existing laws relating to espionage and the national security or the export of technical data. Licensees should apprise themselves of current regulations especially with respect to certain countries, of other agencies, particularly the Office of Defense Trade Controls, Department of State (with respect to Arms, Munitions and Implements of War (22 CFR 121-128)); the Bureau of Industry and Security, Department of Commerce (15 CFR parts 730-774); the Office of Foreign AssetsControl, Department of Treasury (31 CFR Parts 500+) and the Department of Energy.

NOT GRANTED

No license under 35 U.S.C. 184 has been granted at this time, if the phrase "IF REQUIRED, FOREIGN FILING LICENSE GRANTED" DOES NOT appear on this form. Applicant may still petition for a license under 37 CFR 5.12, if a license is desired before the expiration of 6 months from the filing date of the application. If 6 months has lapsed from the filing date of this application and the licensee has not received any indication of a secrecy order under 35 U.S.C. 181, the licensee may foreign file the application pursuant to 37 CFR 5.15(b).

UNITED STATES PATENT AND TRADEMARK OFFICE

Commissioner for Patents
United States Patent and Trademark Office
P.O. Box 1450
Alexandria, VA 22313-1450
www.uspto.gov

ENGELHARD CORPORATION
101 WOOD AVENUE
ISELIN NJ 08830

COPY MAILED

APR 11 2005

OFFICE OF PETITIONS

In re Application of	:	
Galligan et al.	:	DECISION ON PETITION
Application No. 10/810,195	:	
Filed: March 25, 2004	:	
Attorney Docket No.	:	
4339/43581(CON)	:	

This is a decision on the petition filed July 16, 2004 (certificate of mailing dated July 14, 2004), requesting that Figures 2A-2D be considered as filed on March 25, 2004, as part of the original disclosure. The Office of Petitions recently received the petition for a decision on the merits. The Office sincerely apologizes for any inconvenience caused to applicants.

On March 25, 2004, applicants filed the above-identified application. On June 14, 2004, the Office of Initial Patent Examination mailed a Notice To File Corrected Application Papers (Notice), requiring replacement drawings in compliance with 37 CFR 1.84 and 37 CFR 1.121. Additionally, the Notice stated that the application had been accorded a filing date of March 25, 2004, and advised applicants that Figures 2A-2D described in the specification appeared to have been omitted.

In response, on July 16, 2004 (certificate of mailing dated July 14, 2004), applicants filed the present petition, 18 sheets of replacements drawings, including Figures 2A-2D, and an authorization to charge the Deposit Account for any necessary fees.

In the present petition, applicants make reference to a preliminary amendment dated March 25, 2004. Applicants assert that Figures 2A-2D were included with the preliminary amendment. Upon review of the record, Figures 2A-2D have not been located in the official file. Additionally, there is no indication that Figures 2A-2D were incorporated by reference.

The Office notes that the mere reference to another application is not an incorporation of anything therein into the application containing the reference. See In re Seversky, 177 USPQ 144, 146 (C.C.P.A. 1973) and Dart Industries, Inc. v. Banner, 207 USPQ 273, 276 (D.C. Cir. 1980). See also, Advance Display Systems Inc. v. Kent State University, 54 USPQ2d 1673 (Fed. Cir. 2000).

Lastly, applicants did not submit an itemized date-stamped postcard receipt showing that Figures 2A-2D were submitted on March 25, 2004. An applicant alleging that a paper was filed in the Office and later misplaced has the burden of proving the allegation by a preponderance of the evidence. The Office has a well-established and well-publicized practice of providing a receipt for papers filed in the Office to any applicant desiring a receipt. The practice requires that any paper for which a receipt is desired be filed in the Office with a self-addressed postcard identifying the paper. A postcard receipt, which itemizes and properly identifies the papers that are being filed, serves as prima facie evidence of receipt in the Office of all the items listed thereon on the date stamped by the Office. See MPEP 503.

If applicants have a postcard receipt showing that Figures 2A-2D were filed on March 25, 2004, the postcard receipt or a copy thereof should be supplied on renewed petition.

The petition is dismissed. The determination of whether Figures 2A-2D constitute new matter will be made by the examiner. Therefore, Figures 2A-2D will not be entered at this time. The $130.00 petition fee will be charged to Deposit Account No. 05-1070, as authorized.

Further correspondence with respect to this matter should be addressed as follows and **to the attention of Christina Tartera Donnell, Senior Petitions Attorney:**

By mail: Mail Stop Petition
Commissioner for Patents
P.O. Box 1450
Alexandria, VA 22313-1450

By FAX: (703) 872-9306
Attn: Office of Petitions

By hand: Customer Service Window
Randolph Building
401 Dulany Street
Alexandria, VA 22314

The Office of Initial Patent Examination is directed to process the application with a filing date of March 25, 2004, using the papers submitted on that date. **Figures 2A-2D will not be entered at this time.** Additionally, the Office should review the replacement drawings for compliance with 37 CFR 1.84 and 37 CFR 1.121.

Any inquiries related to this decision should be directed to the undersigned at (571) 272-3211.

Christina Tartera Donnell

Christina Tartera Donnell
Senior Petitions Attorney
Office of Petitions

UNITED STATES PATENT AND TRADEMARK OFFICE

Commissioner for Patents
United States Patent and Trademark Office
P.O. Box 1450
Alexandria, VA 22313-1450
www.uspto.gov

INVENTARIUM
4050 Rosemont blvd
Suite 1607
Montreal H1X 1M4 CA CANADA

COPY MAILED

JUN 1 8 2004

OFFICE OF PETITIONS

In re Application of	:	
Daniel Jean	:	
Application No. 10/810,201	:	ON PETITION
Filed: March 26, 2004	:	
Attorney Docket No. N/A	:	
For: ANCHOR SHOVEL	:	

A petition under 37 CFR 1.47(a) was received in the United States Patent and Trademark Office (Office) on March 26, 2004.

Petitioner is informed that a Rule 1.47 petition must be signed by an attorney or agent of record OR a registered attorney or agent not of record who is acting in a representative capacity OR an authorized representative of the assignee of record of the entire interest OR jointly, the entities who together possess the entire interest in the application. 37 CFR 1.33(b).

It is unclear as to whether Gilles Boulanger has authority to file this petition. If Mr. Boulanger does not have authority to file this petition, petitioner must submit another petition under 37 CFR 1.47(a) that is signed by a 37 CFR 1.33(b) entity.

In addition, the filing was not accompanied by the required $130.00 petition fee.

The petition is **dismissed**.

Petitioner must submit a $130.00 petition fee AND must either prove Mr. Boulanger's authority to sign the Rule 47 petition or submit another petition under 37 CFR 1.47(a) signed by an appropriate party within **TWO (2) months** of the mail date of this decision. **Failure to respond will result in abandonment of the application.**

Petitioner is reminded that a grantable petition under 37 CFR 1.47(a) requires (emphasis added):

(1) a petition including **proof of the pertinent facts establishing that the inventor** refuses to join, or **cannot be found or reached after diligent effort,**
(2) **a proper oath or Declaration executed by the inventor or a person with authority to bind the party with proprietary interest in the invention,**
(3) **the fee of $130** as specified in 37 CFR § 1.17(h), and
(4) the last known address of the non-signing inventor.

Further correspondence with respect to this matter should be addressed as follows:

By mail: Mail Stop PETITION
Commissioner for Patents
Post Office Box 1450
Alexandria, VA 22313-1450
ATTN: E. Shirene Willis

By hand: Crystal Plaza 1 Lobby
2011 South Clark Place
Room 1B03
Arlington, VA 22202
ATTN: E. Shirene Willis

By FAX: (703) 872-9306
ATTN: Office of Petitions – E. Shirene Willis

Telephone inquiries should be directed to the undersigned (703) 308-6712.

E. Shirene Willis

E. Shirene Willis
Senior Petitions Attorney
Office of Petitions

UNITED STATES PATENT AND TRADEMARK OFFICE

Commissioner for Patents
United States Patent and Trademark Office
P.O. Box 1450
Alexandria, VA 22313-1450
www.uspto.gov

SHEPPARD MULLIN RICHTER & HAMPTON LLP
333 SOUTH HOPE STREET
48TH FLOOR
LOS ANGELES CA 90071-1448

COPY MAILED

APR 09 2007

OFFICE OF PETITIONS

In re Application of		
Cheiky, et al.	:	DECISION ON PETITION
Application No. 10/810,204	:	
Filed: March 26, 2004	:	
Attorney Docket No. 968-20-022 DIV I	:	

This is a decision on the petition to revive under 37 CFR 1.137(b), filed July 11, 2006.

The petition is **GRANTED**.

The above-identified application became abandoned for failure to timely pay the issue fee in response to the Notice of Allowance mailed January 30, 2006. This Notice set a statutory period for reply of three (3) months for issue fee transmittal. No issue fee having been received, the application became abandoned on May 1, 2007.

With the instant petition, petitioner paid the petition fee, made the proper statement of unintentional delay, and submitted the required reply in the form of the issue and publication fees.

The matter is being forwarded to the Office of Patent Publication for processing into a patent.

Telephone inquiries specific to this decision may be directed to the undersigned at (571)272-3207.

Cliff Congo
Petitions Attorney
Office of Petitions

UNITED STATES PATENT AND TRADEMARK OFFICE

Commissioner for Patents
United States Patent and Trademark Office
P.O. Box 1450
Alexandria, VA 22313-1450
www.uspto.gov

Alex Iosilevsky
2159 - 31st Avenue
San Francisco CA 94116

COPY MAILED
SEP 1 8 2006
OFFICE OF PETITIONS

In re Application of
Iosilevsky
Application No. 10/810,255
Filed: March 29, 2004
Title: Electronic Game Table

ON PETITION

This is a decision on the petition under 37 CFR 1.137(b), filed June 6, 2006, to revive the above-identified application.

This above-identified application became abandoned for failure to timely file a reply to the non-final Office Action of August 9, 2005. The non-final Office Action set a three (3) month shortened statutory period for reply. No extensions of time were obtained under the provisions of 37 CFR §1.136(a). Accordingly, this application became abandoned on November 10, 2005. A Notice of Abandonment was mailed on May 5, 2006.

This petition is hereby **Granted**.

The office hereby acknowledges the receipt of the Amendment submitted with the instant petition.

This application is being forwarded to Technology Center 3700 for further processing.

Telephone inquiries concerning this matter should be directed to the undersigned at (571) 272-3215.

Charlema R. Grant

Charlema R. Grant
Petitions Attorney
Office of Petitions

UNITED STATES PATENT AND TRADEMARK OFFICE

Commissioner for Patents
United States Patent and Trademark Office
P.O. Box 1450
Alexandria, VA 22313-1450
www.uspto.gov

WARREN A. CHEEK, JR.
WENDEROTH, LIND & PONACK, LLP
2033 K STREET NW
SUITE 800
WASHINGTON DC 20006

COPY MAILED

OCT 05 2007

OFFICE OF PETITIONS

In re Application of	:	
Qianjin Hu et al	:	
Application No. 10/810,258	:	DECISION ON PETITION
Filed: March 26, 2004	:	
Attorney Docket No. 2006_2120	:	

This is a decision on the petition under the unintentional provisions of 37 CFR 1.137(b), filed March 2, 2007, to revive the above-identified application.

The petition is **GRANTED**.

The application became abandoned for failure to reply in a timely manner to the non-final Office action mailed March 6, 2006, which set a shortened statutory period for reply of three (3) months. No extensions of time under the provisions of 37 CFR 1.136(a) were obtained. Accordingly, the application became abandoned on June 7, 2006. A Notice of Abandonment was mailed on October 2, 2006.

The petition satisfies the requirements of 37 CFR 1.137(b) in that petitioner has supplied (1) the reply in the form of a continuing application under 37 CFR 1.53(b); (2) the petition fee of $1,500; and (3) a proper statement of unintentional delay.

The petition is not accompanied by a statement of express abandonment in favor of the filing of a continuing application. In order to facilitate action, the petition to revive should include reference to the filing of a continuing application and a letter of express abandonment conditional upon the granting of the petition and of a filing date to the continuing application. Nevertheless, in view of the statement that the reply is the filing of a continuing application, this will be construed as a request to expressly abandon this application in favor of the granting of a filing date to the continuing application. Accordingly, this application is revived solely for the purpose

of continuity with continuing Application No. 11/712,945, filed March 2, 2007. As continuity has been established by the revival of this application, this application is again abandoned in favor of the continuing application. If this was not the intent of applicant, the Office should be promptly notified.

It is not apparent whether the person signing the statement of unintentional delay was in a position to have firsthand or direct knowledge of the facts and circumstances of the delay at issue. Nevertheless, such statement is being treated as having been made as the result of a reasonable inquiry into the facts and circumstances of such delay. See 37 CFR 10.18(b) and Changes to Patent Practice and Procedure; Final Rule Notice, 62 Fed. Reg. 53131, 53178 (October 10, 1997), 1203 Off. Gaz. Pat. Office 63, 103 (October 21, 1997). In the event that such an inquiry has not been made, petitioner must make such an inquiry. If such inquiry results in the discovery that it is not correct that the entire delay in filing the required reply from the due date for the reply until the filing of a grantable petition pursuant to 37 CFR 1.137(b) was unintentional, petitioner must notify the Office.

Telephone inquiries concerning this decision should be directed to the undersigned at (571) 272-3218.

Frances Hicks

Frances Hicks
Petitions Examiner
Office of Petitions

UNITED STATES PATENT AND TRADEMARK OFFICE

Commissioner for Patents
United States Patent and Trademark Office
P.O. Box 1450
Alexandria, VA 22313-1450
www.uspto.gov

COPY MAILED

OCT 05 2007

OFFICE OF PETITIONS

MORRISON & FOERSTER LLP
755 PAGE MILL ROAD
PALO ALTO, CA 94304-1018

In re Application of Qianjin Hu et al Application No. 10/810,258 Filed: March 26, 2004 Attorney Docket No. 433112001000	DECISION ON PETITION TO WITHDRAW FROM RECORD

This is a decision on the Request to Withdraw as attorney or agent of record under 37 C.F.R. § 1.36(b), filed June 1, 2006.

The request is **NOT APPROVED** as moot.

A review of the file record indicates that the power of attorney to all the attorneys associated with the firm of Morrison & Foerster LLP has been revoked by the assignee of the patent application. Accordingly, the request to withdraw under 37 C.F.R. § 1.136(b) is moot.

All future communications from the Office will continue to be directed to the below-listed address until otherwise notified by applicant.

Telephone inquires concerning this decision should be directed to the undersigned at 571-272-3218.

Frances Hicks
Petitions Examiner
Office of Petitions

cc:

Warren A. Cheek, Jr.
Wenderoth, Lind & Ponack LLP
2033 K Street NW, Suite 800
Washington, DC 20006

UNITED STATES PATENT AND TRADEMARK OFFICE

Commissioner for Patents
United States Patent and Trademark Office
P.O. Box 1450
Alexandria, VA 22313-1450
www.uspto.gov

TOWNSEND AND TOWNSEND AND CREW, LLP
TWO EMBARCADERO CENTER
EIGHTH FLOOR
SAN FRANCISCO, CA 94111-3834

COPY MAILED
JUN 2 0 2006
OFFICE OF PETITIONS

In re Application of	:	
Wang, et. al.	:	DECISION ON REQUEST
Application No. 10/810,271	:	TO WITHDRAW FROM
Filed: March 26, 2004	:	RECORD
Attorney Docket No. 021795-000210US	:	

This is a decision on the request to withdraw as attorney or agent of record under 37 CFR § 1.36(b), filed by facsimile transmission on December 20, 2005.

The request is **APPROVED**.

A review of the file record indicates that the attorneys/agents associated with Customer No. 20350: (1) do not have power of attorney in this patent application; but (2) have been employed or otherwise engaged in the proceedings in this patent application. In view of the present decision, the attorneys/agents associated with Customer No. 20350 have been withdrawn from the present application and may not prepare or submit papers under 37 CFR § 1.34, or correspond in any manner in this application unless appointed in an acceptable power of attorney under 37 CFR § 1.32(b).

The request to change the correspondence of record is not acceptable as the requested correspondence address is not that of: (1) the first named signing inventor; or (2) the intervening assignee of the entire interest. All future communications from the Office will be directed to the first named signing inventor at the first copied address below until otherwise properly notified by the applicant.

Applicant is reminded that there are no attorneys/agents of record at this time.

Telephone inquires concerning this decision should be directed to Andrea Smith at (571) 272- 3226.

Andrea Smith
Petitions Examiner
Office of Petitions

Conferee: dp

cc: John S. Wang
1164 Regia Court
Sunnyvale, CA 94087

Dan Cavanagh
Christie, Parker, & Hale, LLP
3501 Jamboree Road
North Tower, Suite 6000
Newport Beach, CA 92660

UNITED STATES PATENT AND TRADEMARK OFFICE

COMMISSIONER FOR PATENTS
UNITED STATES PATENT AND TRADEMARK OFFICE
P.O. BOX 1450
ALEXANDRIA, VA 22313-1450
www.uspto.gov

Kelly Lowry & Kelley, LLP
6320 Canoga Avenue
Suite 1650
Woodland Hills, CA 91367

MAILED

OCT 26 2009

OFFICE OF PETITIONS

In re Patent No. 6,964,740 :
Issue Date: November 15, 2005 :
Application No. 10/810,295 : NOTICE
Filed: March 25, 2004 :
Attorney Docket No. MARVIN-44024 :

This is a notice regarding your request for acceptance of a fee deficiency submission under 37 CFR 1.28 filed May 13, 2009. On September 1, 1998, the Court of Appeals for the Federal Circuit held that 37 CFR 1.28(c) is the sole provision governing the time for correction of the erroneous payment of the issue fee as a small entity. **See DH Technology v. Synergystex International, Inc. 154 F.3d 1333, 47 USPQ2d 1865 (Fed. Cir. Sept. 1, 1998).**

The Office no longer investigates or rejects original or reissue applications under 37 CFR 1.56. **1098 Off. Gaz. Pat. Office 502 (January 3, 1989)**. Therefore, nothing in this Notice is intended to imply that an investigation was done.

Your fee deficiency submission under 37 CFR 1.28 is hereby accepted. The petition is **GRANTED**.

This application is no longer entitled to small entity status. Accordingly, all future fees paid in this application must be paid at the large entity rate.

The application file does not indicate a change of address has been filed in this case, although the address given on the petition differs from the address of record. A change of address should be filed in this case in accordance with MPEP 601.03. A courtesy copy of this decision is being mailed to the address noted on the petition. However, until otherwise instructed, all future correspondence regarding this application will be mailed solely to the address of record

This file is being forwarded to Files Repository.

Telephone inquiries related to this decision should be directed to the Kimberly Inabinet at (571) 272-4618.

Carl Friedman
Petitions Examiner
Office of Petitions

cc: Denton L. Anderson
Sheldon Mak Rose & Anderson PC
100 Corson Street, Third Floor
Pasadena, CA 91103-3848

UNITED STATES PATENT AND TRADEMARK OFFICE

UNITED STATES DEPARTMENT OF COMMERCE
United States Patent and Trademark Office
Address: COMMISSIONER FOR PATENTS
P.O. Box 1450
Alexandria, Virginia 22313-1450
www.uspto.gov

APPLICATION NO.	FILING DATE	FIRST NAMED INVENTOR	ATTORNEY DOCKET NO.	CONFIRMATION NO.
10/810,299	03/26/2004	Christian Bleys	Serie 6155	9269

7590 06/26/2008

Linda K. Russell
Air Liquide
Suite 1800
2700 Post Oak Blvd.
Houston, TX 77056

EXAMINER
PATEL, NIHIR B

ART UNIT	PAPER NUMBER
3772	

MAIL DATE	DELIVERY MODE
06/26/2008	PAPER

Please find below and/or attached an Office communication concerning this application or proceeding.

The time period for reply, if any, is set in the attached communication.

UNITED STATES PATENT AND TRADEMARK OFFICE

Commissioner for Patents
United States Patent and Trademark Office
P.O. Box 1450
Alexandria, VA 22313-1450
www.uspto.gov

Linda K. Russell
Air Liquide
Suite 1800
2700 Post Oak Blvd.
Houston, TX 77056

In re Application of:
Christian Bleys, et al.
Serial No. 10/810,299
Filed: March 26, 2004
Docket: Serie 6155
Title: PORTABLE ASSEMBLY FOR EMERGENCY VENTILATION

6/26/08

DECISION ON PETITION
UNDER 37 CFR § 1.181

This is a decision on the petition to withdraw the holding of abandonment filed on Apr. 3, 2008. The petition is being considered as a petition pursuant to 37 CFR 1.181(a). No fee is required. The petitioner requests a withdrawal of the holding of abandonment.

The petition is **GRANTED.**

The present application was held abandoned for failure to timely respond to the Non-Final Rejection mailed on May 17, 2005 which set forth a three-month period for reply. Notice of Abandonment was mailed on Feb. 4, 2008.

Petitioner asserts that a timely response to the Non-Final Rejection was submitted on Aug. 17, 2005. The petitioner has supplied a copy of the May 17, 2005 Non-Final Rejection, which indicates that the status of the rejection was non-final. The petitioner also has supplied a copy of the amendments including a copy of the Certificate of Mailing under 37 CFR 1.8(a) for Aug. 17, 2005. A copy of the IFW supplied by petitioner indicates that amendments were filed on Aug. 22, 2005. The petitioner has further supplied a copy of an Advisory Action mailed Jan. 25, 2006, which states the Aug. 22, 2005 amendments were filed after a final rejection, although the May 17, 2005 rejection was non-final. Petitioner states that the applicant's manager and the PTO corresponded by phone after receipt of the Jan. 25, 2006 Advisory Action at various times in 2006 and 2007. Then, the Notice of Abandonment was mailed on Feb. 4, 2008.

As the petitioner has provided convincing evidence that a timely reply to the Non-Final Rejection was mailed with a Certificate of Mailing on Aug. 17, 2005, there is no abandonment in fact. Any inconvenience or delay caused to applicant is regretted.

In view of the above, the Notice of Abandonment mailed Feb. 4, 2008 is in error and is hereby vacated. The holding of abandonment is withdrawn. This application is being forwarded to the examiner in Art Unit 3772 for appropriate action.

Frederick R. Schmidt, Director
Technology Center 3700

UNITED STATES PATENT AND TRADEMARK OFFICE

Commissioner for Patents
United States Patent and Trademark Office
P.O. Box 1450
Alexandria, VA 22313-1450
www.uspto.gov

HOGAN & HARTSON LLP
500 S. GRAND AVENUE, SUITE 1900
LOS ANGELES, CA 90071-2611

COPY MAILED

APR 0 4 2006

OFFICE OF PETITIONS

In re Application of	:
Isamu Akasaki et al	:
Application No. 10/810,309	: DECISION GRANTING PETITION
Filed: March 26, 2004	: UNDER 37 CFR 1.313(c)(2)
Attorney Docket No. 71716.0122	:

This is a decision on the petition, filed March 31, 2006, under 37 CFR 1.313(c)(2) to withdraw the above-identified application from issue after payment of the issue fee.

The petition is **GRANTED**.

The above-identified application is withdrawn from issue for consideration of a submission under 37 CFR 1.114 (request for continued examination). See 37 CFR 1.313(c)(2).

Petitioner is advised that the issue fee paid on March 6, 2006 in the above-identified application cannot be refunded. If, however, the above-identified application is again allowed, petitioner may request that it be applied towards the issue fee required by the new Notice of Allowance.[1]

Telephone inquiries should be directed to the undersigned at (571) 272-3218.

This matter is being referred to Technology Center AU 2814 for processing of the request for continued examination under 37 CFR 1.114 and for consideration of the Information Disclosure Statement.

Frances Hicks
Petitions Examiner
Office of Petitions

C:\Documents and Settings\FHicks\My Documents\470\Apr9\810309.wpd

---

[1] *The request to apply the issue fee to the new Notice may be satisfied by completing and returning the new Part B – Fee(s) Transmittal Form (along with any balance due at the time of submission), which includes the following language thereon: "The Director of the USPTO is requested to apply the Issue Fee and Publication Fee (if any) or to re-apply any previously paid issue fee in the application identified above. Petitioner is advised that, whether a fee is indicated as being due or not, the Issue Fee Transmittal Form* ***must*** *be completed and timely submitted to avoid abandonment. Note the language in bold text on the first page of the Notice of Allowance and Fee(s) Due (PTOL-85).*

UNITED STATES PATENT AND TRADEMARK OFFICE

COMMISSIONER FOR PATENTS
UNITED STATES PATENT AND TRADEMARK OFFICE
P.O. BOX 1450
ALEXANDRIA, VA 22313-1450
www.uspto.gov

JONES DAY
222 EAST 41ST ST
NEW YORK NY 10017

COPY MAILED

FEB 13 2008

OFFICE OF PETITIONS

In re Application of :
Lawrence R. McGee, et al. :
Application No. 10/810,325 : ON PETITION
Filed: March 25, 2004 :
Attorney Docket No. 11134-123-999 :

This is a decision in response to the petition, filed October 16, 2007, which is being treated as a petition under 37 CFR 1.137(b) to revive the above-identified application.

The petition is **DISMISSED**.

Any request for reconsideration of this decision must be submitted within TWO (2) MONTHS from the mail date of this decision. Extensions of time under 37 CFR 1.136(a) are permitted. The reconsideration request should include a cover letter entitled "Renewed Petition under 37 CFR 1.137(b)." This is **not** a final agency action within the meaning of 5 U.S.C. ' 704.

The application was held abandoned for failure to timely respond to the final Office action mailed December 18, 2006. A Notice of Abandonment was mailed on June 25, 2007. On October 16, 2007, the present petition was filed.

Petitioner asserts that the abandonment resulted from an error on the part of the U.S. Patent and Trademark Office. Petitioner explains that a timely response to the Office action of December 18, 2006 was submitted in the form of a Notice of Appeal, with an appropriate 3-month petition for extension of time, on June 15, 2007. However, petitioner notes that the papers filed on June 15, 2007 were directed to an incorrect application number. It is also noted that the post card receipt includes a different incorrect application number. A response that has an incorrect application number is handled in accordance with MPEP 508.03. If a paper having an incorrect application number contains sufficient information to identify the correct application and it was timely filed, the holding of abandonment will be withdrawn.

In reviewing the papers submitted, it is concluded that the information contained thereon was sufficient to associate the papers with the correct application. The Notice of Appeal, Petition for Extension of Time and fees filed on June 15, 2007 have been located in the incorrect application. The papers filed June 15, 2007 will be moved from the incorrect application to the present application where they were intended. However, it is now clear that this application became abandoned as a result of petitioner's failure to prosecute this application by filing an appeal brief (and fee required by 37 CFR 41.20(b)(2)) within the time period provided in 37 CFR 41.37(a)(1).

As an appeal brief (and appeal brief fee) was not filed within two (2) months of the Notice of Appeal filed June 15, 2007, and no extensions of time under the provisions of 37 CFR 1.136(a) were

obtained, the appeal is considered dismissed and the proceedings as to the rejected claims are terminated. See 37 CFR 1.197(b). As no claim was allowed, the application became abandoned on August 16, 2007. *See* MPEP 1215.04.

A grantable petition under 37 CFR 1.137(b)[1] must be accompanied by: (1) the required reply,[2] unless previously filed; (2) the petition fee as set forth in 37 CFR 1.17(m); (3) a statement that the entire delay in filing the required reply from the due date for the reply until the filing of a grantable petition pursuant to 37 CFR 1.137(b) was unintentional; and (4) any terminal disclaimer (and fee as set forth in 37 CFR 1.20(d)) required by 37 CFR 1.137(c). Where there is a question as to whether either the abandonment or the delay in filing a petition under 37 CFR 1.137 was unintentional, the Director may require additional information. See MPEP 711.03(c)(II)(C) and (D). The petition lacks item 1.

It is noted that petitioner included a Notice of Appeal and fee, as well as a 3-month extension of time and with the present petition. Since the application became abandoned for a failure to timely file **the Appeal Brief under 37 CFR 41.37(a)(1) and fee set forth in 37 CFR 41.20(b)(2),** not as a result of a failure to respond to the final Office action noted in the Notice of Abandonment mailed June 25, 2007, the Notice of Appeal filed October 16, 2007 will not be processed. Further, the present petition for extension of time is unnecessary since any extension of time under 37 CFR 1.136 must be filed prior to the expiration of the maximum extendable period for reply. *See* In re Application of S., 8 USPQ2d 1630, 1631 (Comm'r Pats. 1988). Petitioner should note that the proposed reply required for consideration of a petition to revive must be an Appeal Brief (and fee required by 37 CFR 41.20(b)(2)), an amendment that *prima facie* places the application in condition for allowance, a Request for Continued Examination (RCE) and submission (37 CFR 1.114), or the filing of a continuing application under 37 CFR 1.53(b). See MPEP 711.03(c)(II)(A)(2).

Under the circumstances, the $510 appeal fee and the $1,050 extension fee will be applied toward the $1,540 petition fee for the present petition, resulting in an overpayment of $20. The $20 overpaid is subject to refund, upon the filing of a request therefor, or may be applied towards the fee required for an Appeal Brief, if one is being file in response to this decision.

Any request for refund of the $20 overpaid must include a copy of this decision and be mailed to Mail Stop 16, Director of the U.S. Patent and Trademark Office, P. O. Box 1450, Alexandria, VA 22313-1450 or faxed to the Customer Service Help Desk at (571) 273-6500.

Further correspondence with respect to this matter should be addressed as follows:

By Mail: Mail Stop PETITION
Commissioner for Patents
P. O. Box 1450
Alexandria, VA 22313-1450

By hand: U. S. Patent and Trademark Office
Customer Service Window, Mail Stop Petitions

---

[1] As amended effective December 1, 1997. See Changes to Patent Practice and Procedure; Final Rule Notice, 62 Fed. Reg. 53131, 53194-95 (October 10, 1997), 1203 Off. Gaz. Pat. Office 63, 119-20 (October 21, 1997).

[2] In a nonprovisional application abandoned for failure to prosecute, the required reply may be met by the filing of a continuing application. In an application or patent, abandoned or lapsed for failure to pay the issue fee or any portion thereof, the required reply must be the payment of the issue fee or any outstanding balance thereof.

Randolph Building
401 Dulany Street
Alexandria, VA 22314

The centralized facsimile number is **(571) 273-8300.**

Any questions concerning this matter may be directed to the undersigned at (571) 272-3204.

Sherry D. Brinkley
Petitions Examiner
Office of Petitions

UNITED STATES PATENT AND TRADEMARK OFFICE

COMMISSIONER FOR PATENTS
UNITED STATES PATENT AND TRADEMARK OFFICE
P.O. BOX 1450
ALEXANDRIA, VA 22313-1450
www.uspto.gov

JONES DAY
222 EAST 41ST ST
NEW YORK, NY 10017

COPY MAILED
SEP 19 2008

In re Application of	:	
Lawrence R. McGee, et al.	:	
Application No. 10/810,325	:	ON PETITION
Filed: March 25, 2004	:	
Attorney Docket No. 11134-123-999	:	

This is a decision on the communication filed April 28, 2008 entitled "Second Petition to Revive Unintentionally Abandoned Application under 37 CFR 1.137(b)" which is being treated as a renewed petition to revive the above-identified application.

The petition is signed by a registered patent attorney or patent agent of record. However, in accordance with 37 CFR 1.34, the signature of Mr. David Pauling appearing on the correspondence shall constitute a representation to the United States Patent and Trademark Office that he is authorized to represent the particular party on whose behalf he acts.

The petition is **GRANTED**.

The application became abandoned as a result of a failure to file an appeal brief (and fee required by 37 CFR 41.20(b)(2)) within two (2) months of the Notice of Appeal filed June 15, 2007. A Notice of Abandonment was mailed on June 25, 2007. On October 16, 2007 a petition to revive under 37 CFR 1.137(b) was filed; however, the petition was dismissed in a decision mailed February 13, 2008. In response, on April 28, 2008, the present petition was filed.

The renewed petition satisfies the requirements of 37 CFR 1.137(b) in that petitioner has supplied (1) the reply in the form of a Request for Continued Examination (RCE), including the fee of $8105 and the submission required by 37 CFR 1.114; (2) the petition fee of $1,540; and (3) an adequate statement of unintentional delay[1].

[1] 37 CFR 1.137(b)(3) requires a statement that the entire delay in filing the required reply from the due date for the reply until the filing of a grantable petition pursuant to 37 CFR 1.137(b) was unintentional. While it is not apparent whether the person signing the statement of unintentional delay was in a position to have firsthand or direct knowledge of the facts and circumstances of the delay at issue, such statement is being treated as having been made as the result of a reasonable inquiry into the facts and circumstances of such delay. See 37 CFR 10.18(b) and Changes to Patent Practice and Procedure; Final Rule Notice, 62 Fed. Reg. 53131, 53178 (October 10, 1997), 1203 Off. Gaz. Pat. Office 63, 103 (October 21, 1997). In the event that such an inquiry has not been made, petitioner must make such an inquiry. If such inquiry results in the discovery that it is not correct that the entire delay in filing the required reply from the due date for the reply until the filing of a grantable petition pursuant to 37 CFR 1.137(b) was unintentional, petitioner must notify the Office.

Petitioner should not that no further petition fee is due on the renewed petition to revive under 37 CFR 1.137(b). Accordingly, the $1,540 petition fee accompanying the present petition is subject to refund.

Any request for refund must included a copy of this decision and be mailed to Mail Stop 16, Director of the U.S. Patent and Trademark Office, P. O. Box 1450, Alexandria, VA 22313-1450 or faxed to the Customer Service Help Desk at (571) 273-6500.

The application is being referred to Technology Center AU 1625 for processing of the RCE and for appropriate action by the Examiner in the normal course of business on the amendment submitted in accordance with 37 CFR 1.114.

Telephone inquiries concerning this decision should be directed to the undersigned at (571) 272-3204. Inquiries relating to further prosecution should be directed to the Technology Center.

Sherry D. Brinkley
Petitions Examiner
Office of Petitions

UNITED STATES PATENT AND TRADEMARK OFFICE

Commissioner for Patents
United States Patent and Trademark Office
P.O. Box 1450
Alexandria, VA 22313-1450
www.uspto.gov

Lawrence G. Fridman, Esq.
SILBER & FRIDMAN
66 Mount Prospect Avenue
Clifton NJ 07013

COPY MAILED

JAN 27 2005

OFFICE OF PETITIONS

In re Application of Badcock et al. Application No.10/810,345 Filed: March 26, 2004 Attorney Docket No. F0416 Title: MONITOR FOR AN OPTICAL FIBRE AND MULTI-GUIDE OPTICAL FIBRE CIRCUITS AND METHODS OF MAKING THEM	DECISION REFUSING STATUS UNDER 37 CFR 1.47(a)

This is in response to the petition under 37 CFR § 1.47(a), filed December 13, 2004.

The above-identified application was filed on March 26, 2004, without an executed oath or declaration. Accordingly, on June 7, 2004, applicant was mailed a "Notice to File Missing Parts of Nonprovisional Application - Filing Date Granted," requiring, for the purposes of this decision, an executed oath or declaration in compliance with § 1.63 and a surcharge for its late filing. This Notice set an extendable two-month period for reply of August 7, 2004.

Rule 47 applicant is given TWO MONTHS from the mailing date of this decision to reply, correcting the below-noted deficiencies. Any reply should be entitled "Request for Reconsideration of Petition Under 37 CFR. § 1.47(a)," and should only address the deficiencies noted below, except that the reply may include an oath or declaration executed by the non-signing inventor. **Failure to respond will result in abandonment of the application**. Any extensions of time will be governed by 37 CFR. §1.136(a).

The petition under 37 CFR. § 1.47(a) is **DISMISSED**.

The merits of the petition have not been reviewed because petitioner has failed to provide the appropriate petition fee. The petition fee is a prerequisite to review of the petition. As of November 22, 2004, the current petition fee is $200.00. A review of the file shows a deposit account to charge any fee deficiency has not been provided. Accordingly, petitioner needs to submit an additional $70.00.

Further correspondence with respect to this matter may be addressed as follows:

By mail: Mail Stop Petition

	Commissioner for Patents P.O. Box 1450 Alexandria, VA 22313-1450
By facsimile:	(703) 872-9306
By delivery service: FedEx, UPS, DHL, etc.)	U.S. Patent and Trademark Office Customer Service Window, Randolph Building 401 Dulany Street Alexandria, VA 22314

Telephone inquiries related to this decision may be directed to the undersigned (571) 272-3215.

Charlema R. Grant

Charlema R. Grant
Petitions Attorney
Office of Petitions

UNITED STATES PATENT AND TRADEMARK OFFICE

Commissioner for Patents
United States Patent and Trademark Office
P.O. Box 1450
Alexandria, VA 22313-1450
www.uspto.gov

SILBER & FRIDMAN
1037 ROUTE 46 EAST
SUITE 207
CLIFTON NJ 07013

COPY MAILED

AUG 19 2005

OFFICE OF PETITIONS

In re Application of	:	
Badcock et al.	:	
Application No.10/810,345	:	DECISION REFUSING STATUS
Filed: March 26, 2004	:	UNDER 37 C.F.R. §1.47(b)
Attorney Docket Number: F0416	:	
Title: Monitor for an Optical Fibre and Multi-Guide Optical Fibre Circuits and Methods of Making Them	:	

This is in response to the renewed petition under 37 C.F.R. §1.47(b), filed March 28, 2005.

Rule 47 applicant is given **TWO MONTHS** from the mailing date of this decision to reply, correcting the below-noted deficiencies. Any reply should be entitled "Request for Reconsideration of Petition Under 37 C.F.R. §1.47(b)," and should only address the deficiencies noted below, except that the reply may include an oath or declaration executed by the non-signing inventor. **Failure to respond will result in abandonment of the application**. Any extensions of time will be governed by 37 C.F.R. §1.136(a).

The above-identified application was filed on March 26, 2004, without an executed oath or declaration. Accordingly, on June 7, 2004, applicant was mailed a "Notice to File Missing Parts of Nonprovisional Application - Filing Date Granted," requiring, for the purposes of this decision, an executed oath or declaration in compliance with § 1.63 and a surcharge for its late filing. This Notice set an extendable two-month period for reply of August 7, 2004. A petition under 37 CFR 1.47 was dismissed on January 27, 2005

In reply, applicant filed the instant petition, the surcharge for late filing of the declaration, and a declaration.

A grantable petition under 37 C.F.R. §1.47(b) requires: (1) proof that the non-signing inventor cannot be reached or refuses to sign the oath or declaration; (2) an acceptable oath or declaration; (3) the petition fee; (4) a statement of last known address of the non-signing inventor; (5) proof of proprietary interest; and (6) a showing that such action is necessary to preserve the rights of parties or to prevent irreparable damage. Rule 47 applicant has failed to establish item (1).

Proof of Refusal to Sign the Oath or Declaration

As to item (1), Rule 47 applicant has failed to show that the non-signing inventors refused to sign the declaration after having been presented with the application papers. The statement of facts provided states inventors Badcock and Giles "had access to above-noted patent application". Rule 47 applicant should explain further what access to the patent application the non-signing inventors had. Further the letter from Badcock states that he did not receive the patent application which was purportedly mailed with the correspondence from RMS Technical Consultants, Ltd. The letter to inventor Giles only mentions assignment documents. There is no indication that application papers (specification, including claims, drawings) were ever presented to inventors Badcock and Giles. Before a refusal can be alleged, applicant must demonstrate a bona fide attempt was made to present a copy of application papers (specification, including claims, drawings, and oath or declaration) to the non-signing inventors. If such an attempt was made rule 47 applicant should provide a statement to that effect and any documentary evidence to establish an attempt was made.

Further correspondence with respect to this matter should be addressed as follows:

By mail:	Mail Stop Petition Commissioner for Patents P.O. Box 1450 Alexandria, VA 22313-1450
By facsimile:	(571) 273-8300
By delivery service: (FedEx, UPS, DHL, etc.)	U.S. Patent and Trademark Office Customer Service Window, Randolph Building 401 Dulany Street Alexandria, VA 22314

Telephone inquiries regarding this decision should be directed to the undersigned at (571) 272-3215.

Charlema R. Grant

Charlema R. Grant
Petitions Attorney
Office of Petitions

UNITED STATES PATENT AND TRADEMARK OFFICE

Commissioner for Patents
United States Patent and Trademark Office
P.O. Box 1450
Alexandria, VA 22313-1450
www.uspto.gov

SILBER & FRIDMAN
1037 ROUTE 46 EAST
SUITE 207
CLIFTON NJ 07013

COPY MAILED

DEC 30 2005

OFFICE OF PETITIONS

In re Application of
Rodney Badcock, Ian Peter Giles
Application No. 10/810,345
Filed: March 26, 2004
Attorney Docket Number: F0416

Title of Invention: Monitor for an Optical Fibre and Multi-Guide Optical Fibre Circuits and Methods of Making Them

DECISION ACCORDING STATUS
UNDER 37 C.F.R. §1.47(b)

This is in response to the renewed petition for status under 37 C.F.R. §1.47(b), filed November 21, 2005.

The petition is **GRANTED**.

Applicant has satisfied the requirements of §1.47(b)[1]. Applicant, by declaration of persons with first hand knowledge and documentary evidence, demonstrated that the non-signing inventors have refused to sign the declaration. This declaration has been reviewed and is found in compliance with 1.63 and 1.64. Applicant paid the petition fee and included a statement of the non-signing inventor's last known address in the petition. Proprietary interest in the application has been established.

This application is hereby accorded Rule 1.47(b) status.

As provided in new Rule 1.47(c), this Office will forward notice of this application's filing to the non-signing inventor at the address given in the petition. Notice of the filing of this application will also be published in the Official Gazette.

The application file is being forwarded to the Office of Initial Patent Examination for processing.

---

[1] A grantable petition under 37 C.F.R. §1.47(b) requires: (1) proof that the non-signing inventor cannot be reached or refuses to sign the oath or declaration; (2) an acceptable oath or declaration; (3) the petition fee; (4) a statement of last known address of the non-signing inventor; (5) proof of proprietary interest; and (6) proof of irreparable damage.

Telephone inquiries regarding this decision should be directed to the undersigned at (571) 272-3215.

Charlema R. Grant

Charlema R. Grant

Petitions Attorney

Office of Petitions

UNITED STATES PATENT AND TRADEMARK OFFICE

Commissioner for Patents
United States Patent and Trademark Office
P.O. Box 1450
Alexandria, VA 22313-1450
www.uspto.gov

Dr. Ian Peter Giles
22 Downscourt Road
Purley
Surrey CR8 1BB
United Kingdom
AIRMAIL

COPY MAILED

DEC 3 0 2005

OFFICE OF PETITIONS

In re Application of
Rodney Badcock and Ian Peter Giles
Application No. 10/810,345
Filed: March 26, 2004
Attorney Docket Number: F0416
Title of Invention: Monitor for an Optical Fibre and Multi-Guide Optical Fibre Circuits and Methods of Making Them

LETTER

Dear Mr. Giles:

You are named as a co-inventor in the above-identified United States patent application filed under the provisions of 35 U.S.C. 118 (United States Code) and 37 CFR 1.47(b). Should a patent be granted on the application you will be designated therein as a co-inventor.

As the named inventor you are entitled to inspect any paper in the file wrapper of the application, order copies of all or any part thereof (at a prepaid cost per 37 CFR 1.19) or make your position of record in the application. Alternatively, you may arrange to do any of the preceding through a registered patent attorney or agent presenting written authorization from you. If you care to join the application, counsel of record (see below) would presumably assist you. Joining in the application would entail the filing of an appropriate oath or declaration by you pursuant to 37 CFR 1.63.

Telephone inquiries regarding this communication should be directed to Petitions Attorney Charlema R. Grant at (571) 272-3215. Requests for information regarding your application should be directed to the File Information Unit at (703) 308-2733. Information regarding how to pay for and order a copy of the application, or a specific paper in the application, should be directed to Certification Division at (703) 308-9726 or 1-800-972-6382 (outside the Washington D.C. area).

Charlema R. Grant

Charlema R. Grant
Petitions Attorney
Office of Petitions

SILBER & FRIDMAN
1037 ROUTE 46 EAST
SUITE 207
CLIFTON NJ 07013
ATTN: Lawrence G. Fridman

UNITED STATES PATENT AND TRADEMARK OFFICE

Commissioner for Patents
United States Patent and Trademark Office
P.O. Box 1450
Alexandria, VA 22313-1450
www.uspto.gov

Dr. Rodney Badcock
7 Laburnum Grove
Brands Hill, Slough
Berks SL3 8QS
United Kingdom
AIRMAIL

COPY MAILED

DEC 3 0 2005

OFFICE OF PETITIONS

In re Application of :
Rodney Badcock and Ian Peter Giles :
Application No. 10/810,345 :
Filed: March 26, 2004 :
Attorney Docket Number: F0416 : LETTER
Title of Invention: Monitor for an Optical Fibre and Multi-Guide Optical Fibre Circuits and Methods of Making Them :

Dear Mr. Badcock:

You are named as a co-inventor in the above-identified United States patent application filed under the provisions of 35 U.S.C. 118 (United States Code) and 37 CFR 1.47(b). Should a patent be granted on the application you will be designated therein as a co-inventor.

As the named inventor you are entitled to inspect any paper in the file wrapper of the application, order copies of all or any part thereof (at a prepaid cost per 37 CFR 1.19) or make your position of record in the application. Alternatively, you may arrange to do any of the preceding through a registered patent attorney or agent presenting written authorization from you. If you care to join the application, counsel of record (see below) would presumably assist you. Joining in the application would entail the filing of an appropriate oath or declaration by you pursuant to 37 CFR 1.63.

Telephone inquiries regarding this communication should be directed to Petitions Attorney Charlema R. Grant at (571) 272-3215. Requests for information regarding your application should be directed to the File Information Unit at (703) 308-2733. Information regarding how to pay for and order a copy of the application, or a specific paper in the application, should be directed to Certification Division at (703) 308-9726 or 1-800-972-6382 (outside the Washington D.C. area).

Charlema R. Grant

Charlema R. Grant
Petitions Attorney
Office of Petitions

SILBER & FRIDMAN
1037 ROUTE 46 EAST
SUITE 207
CLIFTON NJ 07013
ATTN: Lawrence G. Fridman

UNITED STATES PATENT AND TRADEMARK OFFICE

Commissioner for Patents
United States Patent and Trademark Office
P.O. Box 1450
Alexandria, VA 22313-1450
www.uspto.gov

COPY MAILED

SEP 12 2007

OFFICE OF PETITIONS

COX SMITH MATTHEWS INCORPORATED
112 EAST PECAN STREET SUITE 1800
SAN ANTONIO TX 78205-1521

In re Application of	:	
C. Robert Castaneda	:	
Application No. 10/810,346	:	DECISION GRANTING PETITION
Filed: March 26, 2004	:	UNDER 37 CFR 1.137(b)
Attorney Docket No. STETHOSCOPE.PAT	:	

This is a decision on the petition under 37 CFR 1.137(b), filed April 2, 2007, to revive the above-identified application.

The petition is **GRANTED**.

The petition satisfies the conditions for revival pursuant to the provisions of 37 CFR 1.137(b) in that (1) the reply in the form of replacement drawing sheet; (2) the petition fee; and (3) the required statement of unintentional delay have been received. Accordingly, the reply to the Notice of Allowability of January 13, 2006, is accepted as having been unintentionally delayed.

Telephone inquiries concerning this decision should be directed to the undersigned at (571) 272-3208.

This matter is being referred to Patent Publication and for review of the drawings submitted on April 2, 2007.

Karen Creasy

Karen Creasy
Petitions Examiner
Office of Petitions

UNITED STATES PATENT AND TRADEMARK OFFICE

Commissioner for Patents
United States Patent and Trademark Office
P.O. Box 1450
Alexandria, VA 22313-1450
www.uspto.gov

POLSTER, LIEDER, WOODRUFF & LUCCHESI
12412 POWERSCOURT DRIVE SUITE 200
ST. LOUIS MO 63131-3615

COPY MAILED

AUG 1 0 2005

OFFICE OF PETITIONS

In re Application of	:	
Terry Pullaro	:	
Application No. 10/810,347	:	DECISION GRANTING PETITION
Filed: March 26, 2004	:	UNDER 37 CFR 1.137(b)
Attorney Docket No. PULT 9283US	:	

This is a decision on the petition under 37 CFR 1.137(b), filed May 31, 2005, to revive the above-identified application.

The petition is **GRANTED**.

The above-identified application became abandoned for failure to reply in a timely manner to the Notice To File Missing Parts Of Nonprovisional Application mailed June 7, 2004, which set a period for reply of two (2) months. No extensions of time under the provisions of 37 CFR 1.136(a) were obtained. Accordingly, the above-identified application became abandoned on August 8, 2004.

Telephone inquiries concerning this decision should be directed to the undersigned at (571) 272-3208.

This matter is being referred to the Office of Initial Patent Examination.

Karen Creasy

Karen Creasy
Petitions Examiner
Office of Petitions
Office of the Deputy Commissioner
for Patent Examination Policy

UNITED STATES PATENT AND TRADEMARK OFFICE

Commissioner for Patents
United States Patent and Trademark Office
P.O. Box 1450
Alexandria, VA 22313-1450
www.uspto.gov

TOWNSEND AND TOWNSEND AND CREW, LLP
TWO EMBARCADERO CENTER
EIGHTH FLOOR
SAN FRANCISCO, CA 94111-3834

COPY MAILED

APR 03 2008

OFFICE OF PETITIONS

In re Patent No. 7,217,321 :
Issue Date: May 15, 2007 :
Application No. 10/810,350 : ON PETITION
Filed: March 26, 2004 :
Attorney Docket No. 20174C-004960US :

This is a decision on the petition filed October 10, 2007, which is being treated as a petition under 37 CFR 3.81(b)[1] to add an additional assignee's name on the front page of the above-identified patent by way of a Certificate of Correction.

The petition is **granted.**

Telephone inquiries concerning this matter may be directed to the undersigned at (571) 272-3210. Any questions concerning the issuance of the Certificate of Correction should be directed to the Certificates of Correction Branch at (703) 305-8309.

This application is being forwarded to the Certificates of Correction Branch for issuance of the requested Certificate of Correction.

Irvin Dingle
Petitions Examiner
Office of Petitions

[1] See Official Gazette of June 22, 2004

UNITED STATES PATENT AND TRADEMARK OFFICE

Commissioner for Patents
United States Patent and Trademark Office
P.O. Box 1450
Alexandria, VA 22313-1450
www.uspto.gov

MAILED
FROM DIRECTORS OFFICE

DEC 0 3 2004

TECHNOLOGY CENTER 3600

Stephen C. Glazier
Kirkpatrick & Lockhart LLP
1800 Massachusetts Avenue, NM
Washington, DC 20036

In re application of Larkin Hill Fowrey et al. Application No. 10/810,373 Filed: March 26, 2004 For: TELEMATICS DEVICE FOR VEHICLES WITH AN INTERFACE FOR MULTIPLE PERIPHERAL DEVICES	: : : :	**DECISION ON PETITION TO MAKE SPECIAL (ACCELERATED EXAMINATION)**

This is in response to the petition filed on October 6, 2004 to make the above-identified application special on the basis of special examining procedure for certain new applications - accelerated examination as set forth in MPEP § 708.02 VIII.

The requirements for granting special status under this section are: (A) a petition to make special accompanied by the fee set forth in 37 CFR 1.17(h); (B) all claims being directed to a single invention, or an election without traverse if the Office determines that all the claims are not directed to a single invention; (C) a statement that a pre-examination search was made listing the field of search; (D) one copy of each of the references deemed most closely related to the subject matter encompassed by the claims if said references are not already of record; and (E) a detailed discussion of how the claimed subject matter is patentable over the references in accordance with 37 CFR 1.111 (b) and (c).

The petition fails to adequately meet requirement (E) above. In this regard, item (E) is not met because the petition includes an explanation relating to how only claims 47-48 are patentable over the prior art, and thus fails to include a detailed discussion of how <u>all</u> of the claimed subject matter is patentable over the references

For the above stated reasons, the petition is **<u>DISMISSED</u>**.

Petitioner is given one more opportunity to perfect the petition. Any request for reconsideration must be filed within TWO MONTHS of the date of this decision. Extensions of time under 37 CFR 1.136(a) are permitted.
Applicant should promptly submit a renewed petition to the Commissioner of Patents and Trademarks, Washington, D.C. 20231. The envelope should indicate that the correspondence be brought to the attention of Technology Center 3600.

Until the renewed petition is submitted, the application will be returned to the examiner's docket to await treatment on the merits in the normal order of examination.

Steven N. Meyers
Special Programs Examiner
Technology Center 3600
(703) 308-3868

SNM/snm: 11/19/04

UNITED STATES PATENT AND TRADEMARK OFFICE

Commissioner for Patents
United States Patent and Trademark Office
P.O. Box 1450
Alexandria, VA 22313-1450
www.uspto.gov

COPY MAILED
NOV 27 2006
OFFICE OF PETITIONS

John C. Andrade, Esquire
116 West Water Street
P. O. Box 598
Dover, DE 19903

In re Application of

Brett Ashley Roderick

Application No. 10/810,409

Filed: March 26, 2004

Attorney Docket No. JH03-182

DECISION ON PETITION

This is a decision on the petition under 37 CFR 1.137(b), filed September 25, 2, 2006, to revive the above-identified application.

The petition is **GRANTED**.

The above-cited application became abandoned for failure to respond to the final Office action mailed January 12, 2006, which set a shortened statutory period for reply of three months from its mailing date. A response was not received within the allowable period and the application became abandoned on April 13, 2006. A Notice of Abandonment was mailed on October 11, 2006.

The Request for Continued Examination, filed September 25, 2006, is noted and made of record. It is presumed that the "Response" filed with the petition is intended to be the submission required by 37 CFR 1.114.

The application is being forwarded to Technology Center 3600, GAU 3652 for further processing.

Telephone inquiries concerning this decision should be directed to the undersigned at (571) 272-3222.

Kenya A. McLaughlin
Petitions Attorney
Office of Petitions

faUNITED STATES PATENT AND TRADEMARK OFFICE

COMMISSIONER FOR PATENTS
UNITED STATES PATENT AND TRADEMARK OFFICE
P.O. BOX 1450
ALEXANDRIA, VA 22313-1450
WWW.USPTO.GOV

Paper No.

PULSE-LINK, INC.
1969 KELLOGG AVENUE
CARLSBAD CA 92008

COPY MAILED

FEB 0 4 2008

OFFICE OF PETITIONS

In re Application of	:	
Ismail Lakkis	:	
Application No. 10/810,410	:	DECISION ON PETITION
Filed: March 26, 2004	:	PURSUANT TO
Attorney Docket No.: 00287	:	37 C.F.R. § 1.137(B)
Title: SYSTEMS AND METHODS FOR	:	
RECEIVING DATA IN A WIRELESS	:	
COMMUNICATION NETWORK	:	

This is a decision on the petition pursuant to 37 C.F.R. § 1.137(b)[1], filed on November 2, 2007, to revive the above-identified application.

The concurrently submitted Revocation of Power of Attorney with New Power of Attorney and Change of Correspondence Address has been entered and made of record.

The above-identified application became abandoned for failure to reply in a timely manner to the non-final Office action, mailed

1 A grantable petition pursuant to 37 C.F.R § 1.137(b) must be accompanied by:

(1) The reply required to the outstanding Office action or notice, unless previously filed;
(2) The petition fee as set forth in § 1.17(m);
(3) A statement that the entire delay in filing the required reply from the due date for the reply until the filing of a grantable petition pursuant to this paragraph was unintentional. The Commissioner may require additional information where there is a question whether the delay was unintentional, and;
(4) Any terminal disclaimer (and fee as set forth in § 1.20(d)) required pursuant to paragraph (d) of this section.

May 31, 2006, which set a shortened statutory period for reply of three months. No response was received, and no extensions of time under the provisions of 37 C.F.R. § 1.136(a) were requested. Accordingly, the above-identified application became abandoned on September 1, 2006. A notice of abandonment was mailed on February 9, 2007.

With this petition, Petitioner has submitted the petition fee, an amendment, and the proper statement of unintentional delay. A terminal disclaimer is not required.

As such, the petition under 37 C.F.R. § 1.137(b) is **GRANTED**.

The Technology Center will be notified of this decision. The Technology Center's support staff will notify the Examiner of this decision, so that the concurrently submitted amendment can be processed.

Telephone inquiries regarding *this decision* should be directed to the undersigned at (571) 272-3225[2]. All other inquiries concerning the status of the application should be directed to the Technology Center

/Paul Shanoski/
Paul Shanoski
Senior Attorney
Office of Petitions

2 Petitioner will note that all practice before the Office should be in writing, and the action of the Office will be based exclusively on the written record in the Office. See 37 C.F.R. § 1.2. As such, Petitioner is reminded that no telephone discussion may be controlling or considered authority for any further action(s) of Petitioner.

UNITED STATES PATENT AND TRADEMARK OFFICE

UNITED STATES DEPARTMENT OF COMMERCE
United States Patent and Trademark Office
Address: COMMISSIONER FOR PATENTS
P.O. Box 1450
Alexandria, Virginia 22313-1450
www.uspto.gov

APPLICATION NUMBER	FILING OR 371(C) DATE	FIRST NAMED APPLICANT	ATTY. DOCKET NO./TITLE
10/810,410	03/26/2004	Ismail Lakkis	45389.000011.CIP1

CONFIRMATION NO. 8912

44279
PULSE-LINK, INC.
1969 KELLOGG AVENUE
CARLSBAD, CA 92008

POA ACCEPTANCE LETTER

OC000000027869085

Date Mailed: 01/23/2008

NOTICE OF ACCEPTANCE OF POWER OF ATTORNEY

This is in response to the Power of Attorney filed 11/02/2007.

The Power of Attorney in this application is accepted. Correspondence in this application will be mailed to the above address as provided by 37 CFR 1.33.

/pashanoski/

Office of Initial Patent Examination (571) 272-4000 or 1-800-PTO-9199

UNITED STATES PATENT AND TRADEMARK OFFICE

Commissioner for Patents
United States Patent and Trademark Office
P.O. Box 1450
Alexandria, VA 22313-1450
www.uspto.gov

LYLE FRANCIS JOHNSON
PO BOX 871051
WASILLA, AK 99687-1051

COPY MAILED

JUL 14 2005

OFFICE OF PETITIONS

In re Application of :
Lyle Francis Johnson :
Application No. 10/810,411 : ON PETITION
Filed: March 25, 2004 :
For: E-Z LINE CLAMP AND CUTTER :

This is a decision on the petition under 37 CFR 1.173(b), filed June 17, 2005, to revive the above-identified application.

The petition is **GRANTED.**

The above-identified application became abandoned for failure to reply in a timely manner to the Notice to File Corrected Application Papers (Notice) mailed August 5, 2004. The Notice set a period for reply of two (2) months from the mail date of the Notice. No extensions of time under the provisions of 37 CFR 1.136(a) were obtained. Accordingly, the above-identified application became abandoned on October 6, 2004.

Telephone inquiries concerning this decision should be directed to Wan Laymon at (571) 272-3220.

This matter is being referred to the Office of Initial Patent Examination for preexamination processing.

Wan Laymon
Petitions Examiner
Office of Petitions
Office of the Deputy Commissioner
for Patent Examination Policy

UNITED STATES PATENT AND TRADEMARK OFFICE

Commissioner for Patents
United States Patent and Trademark Office
P.O. Box 1450
Alexandria, VA 22313-1450
www.uspto.gov

DLA PIPER RUDNICK GRAY CARY US LLP
153 TOWNSEND STREET
SUITE 800
SAN FRANCISCO CA 94107-1907

COPY MAILED

MAR 2 2 2006

OFFICE OF PETITIONS

In re Application of	:	
Hsieh, Victor	:	
Application No. 10/810,432	:	ON PETITION
Filed: March 25, 2004	:	
Attorney Docket No. 2102680-991100	:	

This is a decision on the petition under 37 C.F.R. § 1.137(b), filed December 30, 2005, to revive the above-identified application.

The petition is **GRANTED.**

The petition satisfies the conditions for revival pursuant to the provisions of 37 CFR 1.137(b) in that (1) the reply in the form of a Response; (2) the petition fee; and (3) the required statement of unintentional delay have been received. Accordingly, the response has been accepted as having been unintentionally delayed.

This matter is being referred to Technology Center 3600 for further examination on the merits.

Telephone inquiries regarding this decision should be directed to the undersigned at (571) 272-3206.

Liana Chase
Petitions Examiner
Office of Petitions

UNITED STATES PATENT AND TRADEMARK OFFICE

Commissioner for Patents
United States Patent and Trademark Office
P.O. Box 1450
Alexandria, VA 22313-1450
www.uspto.gov

JOSEPH F. HETZ
BRINKS HOFER GILSON & LIONE
P.O. BOX 10395
CHICAGO, IL 60610

COPY MAILED

MAY 29 2009

OFFICE OF PETITIONS

In re Application of	:	
Franczek et al.	:	DECISION ON PETITION
Application No. 10/810,443	:	TO WITHDRAW
Filed: March 26, 2004	:	FROM RECORD
Attorney Docket No. 2222.5230005	:	

This is a decision on the Request to Withdraw as attorney or agent of record under 37 C.F.R. § 1.36(b), filed June 14, 2005.

The request is **NOT APPROVED** because it is moot.

A review of the file record indicates that on May 3, 2006 the power of attorney was revoked by the assignee of the patent application. Accordingly, the request to withdraw under 37 C.F.R. § 1.36(b) is moot.

All future communications from the Office will be directed to the below-listed address until otherwise notified by applicant.

Telephone inquires concerning this decision should be directed to the undersigned at 571-272-7751. All other inquires concerning either the examination or status of the application should be directed to the Technology Center.

Joan Olszewski
Petitions Examiner
Office of Petitions

cc: Sterne, Kessler, Goldstein & Fox P.L.L.C.
1100 New York Avenue, N.W.
Washington DC 20005

UNITED STATES PATENT AND TRADEMARK OFFICE

Commissioner for Patents
United States Patent and Trademark Office
P.O. Box 1450
Alexandria, VA 22313-1450
www.uspto.gov

POPOVICH, WILES & O'CONNELL, PA
650 THIRD AVENUE SOUTH
SUITE 600
MINNEAPOLIS MN 55402

COPY MAILED

SEP 15 2004

OFFICE OF PETITIONS

In re Application of Cathleen Von Lehe, Richard Kusleika, Brooke Ren and Thomas Clubb Application No. 10/810,445 Filed: March 26, 2004 Attorney Docket No. EV31009US Title of Invention: Double Ended Intravascular Medical Device	DECISION GRANTING STATUS UNDER 37 CFR 1.47(a)

This is in response to the petition under 37 CFR 1.47(a), filed August 13, 2004.

The petition is GRANTED.

Petitioner has shown that the non-signing inventor has refused to join in the filing of the above-identified application. Sufficient evidence has been presented to establish that non-signing inventor refuses to execute the application papers.

The above-identified application and papers have been reviewed and found in compliance with 37 CFR 1.47(a). This application is hereby accorded Rule 1.47(a) status.

As provided in Rule 1.47(c), this Office will forward notice of this application's filing to the non-signing inventor at the address given in the petition. Notice of the filing of this application will also be published in the Official Gazette.

This application is being forwarded to the Office of Initial Patent Examination for further processing.

Telephone inquiries related to this decision may be directed to the undersigned at (703) 306-0251.

Charlema R. Grant
Petitions Attorney
Office of Petitions

UNITED STATES PATENT AND TRADEMARK OFFICE

UNITED STATES DEPARTMENT OF COMMERCE
United States Patent and Trademark Office
Address: COMMISSIONER FOR PATENTS
P.O. Box 1450
Alexandria, Virginia 22313-1450
www.uspto.gov

POPOVICH, WILES & O'CONNELL, PA
8519 EAGLE POINT BLVD
Suite 180
LAKE ELMO, MN 55042

Mail Date: 04/21/2010

Applicant	: Cathleen von Lehe	: DECISION ON REQUEST FOR
Patent Number	: 7637920	: RECALCULATION of PATENT
Issue Date	: 12/29/2009	: TERM ADJUSTMENT IN VIEW
Appliction No	: 10/810,445	: OF WYETH AND NOTICE OF INTENT TO
Filed	: 03/26/2004	: ISSUE CERTIFICATE OF CORRECTION
		:

The Request for Recalculation is **GRANTED** to the extent indicated.

The patent term adjustment has been determined to be **1391** days. The USPTO will *sua sponte* issue a certificate of correction reflecting the amount of PTA days determined by the recalculation.

Prior to the issuance of the certificate of correction, the USPTO will afford patentee an opportunity to be heard and request reconsideration. Accordingly, patentee has **one month or thirty (30) days**, whichever is longer, to file a request for reconsideration of this patent term adjustment calculation. See 35 U.S.C. 154(b)(3)(B)(ii) and 37 CFR 1.322(a)(4). No extensions of time will be granted under 37 CFR 1.136.

Patentee should use document code PET.OP if electronically filing a request for reconsideration of this patent term adjustment calculation. The patentee must also include the information required by 37 CFR 1.705(b)(2) and the fee required by 37 CFR 1.18(e). If patentee does not file a timely request for reconsideration of this patent term adjustment calculation including the information required by 37 CFR 1.705(b)(2) and the fee required by 37 CFR 1.18(e), the USPTO will issue a certificate of correction reflecting the PTA determination noted above.

Patentee should be aware that in order to preserve the right to review in the United States District Court for the District of Columbia of the USPTO patent term adjustment determination, patentee must ensure that he or she also take the steps required under 35 U.S.C. 154(b)(4)(A) in a timely manner. Nothing in the request for recalculation should be construed as providing an alternative time frame for commencing a civil action under 35 U.S.C. 154(b)(4)(A).

Any questions concerning this decision should be directed to the Office of Patent Legal Administration at 571-272-7702.

UNITED STATES PATENT AND TRADEMARK OFFICE

Commissioner for Patents
United States Patent and Trademark Office
P.O. Box 1450
Alexandria, VA 22313-1450
www.uspto.gov

LATHROP & GAGE LC
4845 PEARL EAST CIRCLE
SUITE 300
BOULDER CO 80301

COPY MAILED

JUN 23 2008

OFFICE OF PETITIONS

In re Patent No. 7,180,673 :
Issue Date: February 20, 2007 :
Application No. 10/810,446 :
Filed: March 25, 2004 :
Attorney Docket No. 420228 :

NOTICE

This is a notice regarding your request for acceptance of a fee deficiency submission under 37 CFR 1.28. On September 1, 1998, the Court of Appeals for the Federal Circuit held that 37 CFR 1.28(c) is the sole provision governing the time for correction of the erroneous payment of the issue fee as a small entity. **See DH Technology v. Synergystex International, Inc. 154 F.3d 1333, 47 USPQ2d 1865 (Fed. Cir. Sept. 1, 1998).**

The Office no longer investigates or rejects original or reissue applications under 37 CFR 1.56. **1098 Off. Gaz. Pat. Office 502 (January 3, 1989)**. Therefore, nothing in this Notice is intended to imply that an investigation was done.

Your fee deficiency submission under 37 CFR 1.28 is hereby **ACCEPTED**.

This application no longer qualifies for small entity status. Accordingly, all future fees in this file must be paid at the large entity rate, absent further notification from a proper party of a change in status. ***See 37 CFR 1.27(c)(2).***

Inquiries related to this communication should be directed to the undersigned at (571) 272-3208.

Karen Creasy
Petitions Examiner
Office of Petitions

UNITED STATES PATENT AND TRADEMARK OFFICE

Commissioner for Patents
United States Patent and Trademark Office
P.O. Box 1450
Alexandria, VA 22313-1450
www.uspto.gov

JJGJR.: 08-06

Paper No: __

COPY MAILED

AUG 2 7 2007

OFFICE OF PETITIONS

RAYMOND Y. CHAN
108 N. YNEZ AVE., SUITE 128
MONTEREY PARK CA 91754

In re Application of	:	
Hou, et al.	:	DECISION
Application No. 10/810,447	:	
Filing Date: 26 March, 2004	:	
Attorney Docket No.: USP2343C-DRSH	:	

This is a decision on the petition filed on 7 November, 2006, seeking to revive the instant application under 37 C.F.R. §1.137(a) as abandoned due to unavoidable delay.

The Office regrets the delay in addressing this matter, however, the instant petition was presented to the attorneys in the Office of Petitions only at this writing.[1]

For the reasons set forth below, the petition as considered under 37 C.F.R. §1.137(a) is **GRANTED**.

BACKGROUND

The record reflects that:

- Petitioner failed to reply timely and properly to the Restriction requirement mailed on 10

[1] **NOTE: Monitoring of the status of applications on PAIR can inform one's management of application responses and provide an indication when mailings of Office actions should be expected. Status Inquiries filed at three (3) or four (4) month intervals provide a demonstration of diligence and attention in supporting a petition seeking relief under 37 C.F.R. §1.181.**

March, 2006, with reply due absent extension of time on or before 10 May, 2006;

- the instant application went abandoned by operation of law after midnight 10 May, 2006;
- the Office mailed the Notice of Abandonment on 5 October, 2006;
- on 7 November, 2006, Petitioner filed, *inter alia*, the instant petition with fee, his statement and documents in support thereof (including U.S. Postal Service (USPS) Track and Confirm data/printouts (in lieu of a date-stamped receipt card (see: MPEP §503[2]) averring timely transmission via USPS a reply in the form of an Election submitted over a 26 April, 2006, Certificate of Mailing as a proper and timely reply.

Out of an abundance of caution, Petitioners always are reminded that those registered to practice *and* all others who make representations before the Office are reminded to inquire into the underlying facts of representations made to the Office and support averments with the

---

[2] MPEP §503 provides in pertinent part:

§503 Application Number and Filing Receipt

* * *

A return postcard should be attached to *each* patent application for which a receipt is desired. It is important that the return postcard itemize all of the components of the application. If the postcard does not itemize each of the components of the application, it will not serve as evidence that any component which was not itemized was received by the United States Patent and Trademark Office (USPTO). It should be recognized that the identification of an application by application number does not necessarily signify that the USPTO has accepted the application as complete (37 C.F.R. §1.53(a)).

* * *

RETURN POSTCARD

If a receipt of any item (e.g., paper or fee) filed in the USPTO is desired, it may be obtained by enclosing with the paper a self-addressed postcard specifically identifying the item. The USPTO will stamp the receipt date on the postcard and place it in the outgoing mail. A postcard receipt which itemizes and properly identifies the items which are being filed serves as *prima facie* evidence of receipt in the USPTO of all the items listed thereon on the date stamped thereon by the USPTO.

The identifying data on the postcard should be so complete as to clearly identify the item for which receipt is requested. For example, the postcard should identify the applicant's name, application number (if known), confirmation number (if known), filing date, interference number, title of the invention, etc. The postcard should also identify the type of paper being filed, e.g., new application, affidavit, amendment, notice of appeal, appeal brief, drawings, fees, motions, supplemental oath or declaration, petition, etc., and the number of pages being submitted. If a new application is being filed, all parts of the application being submitted should be separately listed on the postcard, e.g., the number of pages of specification (including written description, claims and abstract), number of claims, number of sheets of drawings, number of pages of oath/declaration, number of pages of cover sheet (provisional application).

The postcard receipt will not serve as *prima facie* evidence of receipt of any item which is not adequately itemized on the postcard. For example, merely listing on the postcard "a complete application" or "patent application" will not serve as a proper receipt for each of the required components of an application (e.g., specification (including claims), drawings (if necessary), oath or declaration and the application filing fee) or missing portions (e.g., pages, sheets of drawings) of an application if one of the components or portion of a component is found to be missing by the USPTO. Each separate component should be specifically and properly itemized on the postcard. Furthermore, merely incorporating by reference in the postcard receipt, the items listed in a transmittal letter will not serve as *prima facie* evidence of receipt of those items.

The person receiving the item(s) in the USPTO will check the listing on the postcard against the item(s) being filed to be sure they are properly identified and that all the items listed on the postcard are presently being submitted to the USPTO. If any of the items listed on the postcard are not being submitted to the USPTO, those items will be crossed off and the post-card initialed by the person receiving the items. Upon return of a postcard receipt from the USPTO, the postcard receipt should be promptly reviewed by the person who filed the items to ensure that every item specifically denoted on the postcard was received by the USPTO. If the postcard receipt has been annotated to indicate that a particular item denoted on the postcard was not received by the USPTO, the postcard receipt will not serve as *prima facie* evidence of receipt of that item in the USPTO. (Emphasis supplied.)

appropriate documentation–since all owe to the Office the continuing duty to disclose.[3]

STATUTES, REGULATIONS AND ANALYSIS

Congress has authorized the Commissioner to "revive an application if the delay is shown to the satisfaction of the Commissioner to have been "unavoidable." 35 U.S.C. §133 (1994).[4]

---

[3] See supplement of 17 June, 1999. The Patent and Trademark Office is relying on petitioner's duty of candor and good faith and accepting a statement made by Petitioner. See Changes to Patent Practice and Procedure, 62 Fed. Reg. at 53160 and 53178, 1203 Off. Gaz. Pat. Office at 88 and 103 (responses to comments 64 and 109)(applicant obligated under 37 C.F.R. §10.18 to inquire into the underlying facts and circumstances when providing statements to the Patent and Trademark Office).

Specifically, the regulations at 37 C.F.R. §10.18 provide:

§ 10.18 Signature and certificate for correspondence filed in the Patent and Trademark Office.
(a) For all documents filed in the Office in patent, trademark, and other non-patent matters, except for correspondence that is required to be signed by the applicant or party, each piece of correspondence filed by a practitioner in the Patent and Trademark Office must bear a signature by such practitioner complying with the provisions of §1.4(d), §1.4(e), or § 2.193(c)(1) of this chapter.
(b) By presenting to the Office (whether by signing, filing, submitting, or later advocating) any paper, the party presenting such paper, whether a practitioner or non-practitioner, is certifying that—
(1) All statements made therein of the party's own knowledge are true, all statements made therein on information and belief are believed to be true, and all statements made therein are made with the knowledge that whoever, in any matter within the jurisdiction of the Patent and Trademark Office, knowingly and willfully falsifies, conceals, or covers up by any trick, scheme, or device a material fact, or makes any false, fictitious or fraudulent statements or representations, or makes or uses any false writing or document knowing the same to contain any false, fictitious or fraudulent statement or entry, shall be subject to the penalties set forth under 18 U.S.C. 1001, and that violations of this paragraph may jeopardize the validity of the application or document, or the validity or enforceability of any patent, trademark registration, or certificate resulting therefrom; and
(2) To the best of the party's knowledge, information and belief, formed after an inquiry reasonable under the circumstances, that —
(i) The paper is not being presented for any improper purpose, such as to harass someone or to cause unnecessary delay or needless increase in the cost of prosecution before the Office;
(ii) The claims and other legal contentions therein are warranted by existing law or by a nonfrivolous argument for the extension, modification, or reversal of existing law or the establishment of new law;
(iii) The allegations and other factual contentions have evidentiary support or, if specifically so identified, are likely to have evidentiary support after a reasonable opportunity for further investigation or discovery; and
(iv) The denials of factual contentions are warranted on the evidence, or if specifically so identified, are reasonably based on a lack of information or belief.
(c) Violations of paragraph (b)(1) of this section by a practitioner or non-practitioner may jeopardize the validity of the application or document, or the validity or enforceability of any patent, trademark registration, or certificate resulting therefrom. Violations of any of paragraphs (b)(2)(i) through (iv) of this section are, after notice and reasonable opportunity to respond, subject to such sanctions as deemed appropriate by the Commissioner, or the Commissioner's designee, which may include, but are not limited to, any combination of —
(1) Holding certain facts to have been established;
(2) Returning papers;
(3) Precluding a party from filing a paper, or presenting or contesting an issue;
(4) Imposing a monetary sanction;
(5) Requiring a terminal disclaimer for the period of the delay; or
(6) Terminating the proceedings in the Patent and Trademark Office.
(d) Any practitioner violating the provisions of this section may also be subject to disciplinary action. See § 10.23(c)(15).
[Added 50 FR 5175, Feb. 6, 1985, effective Mar. 8, 1985; para. (a) revised, 58 FR 54494, Oct. 22, 1993, effective Nov. 22, 1993; paras. (a) & (b) revised, paras. (c) & (d) added, 62 FR 53131, Oct. 10, 1997, effective Dec. 1, 1997; para. (a) revised, 69 FR 56481, Sept. 21, 2004, effective Oct. 21, 2004]

[4] 35 U.S.C. §133 provides:
35 U.S.C. §133 Time for prosecuting application.
Upon failure of the applicant to prosecute the application within six months after any action therein, of which notice has been given or mailed to the applicant, or within such shorter time, not less than thirty days, as fixed by the Commissioner in such action, the application shall be regarded as abandoned by the parties thereto, unless it be shown to the satisfaction of the Commissioner that such delay was unavoidable.

The regulations at 37 C.F.R. §1.137(a) and (b) set forth the requirements for a petitioner to revive a previously unavoidably or unintentionally, respectively, abandoned application under this congressional grant of authority. The language of 35 U.S.C. §133 and 37 C.F.R. §1.137(a) is clear, unambiguous, and without qualification: the delay in tendering the reply to the outstanding Office action, as well as filing the first petition seeking revival, must have been unavoidable for the reply now to be accepted on petition.[5]

Delays in responding properly raise the question whether delays are unavoidable.[6] Where there is a question whether the delay was unavoidable, Petitioners must meet the burden of establishing that the delay was unavoidable within the meaning of 35 U.S.C. §133 and 37 C.F.R. §1.137(a).[7] And the Petitioner must be diligent in attending to the matter.[8] Failure to do so does not constitute the care required under Pratt, and so cannot satisfy the test for diligence and due care.

(By contrast, unintentional delays are those that do not satisfy the very strict statutory and regulatory requirements of unavoidable delay, and also, by definition, are not intentional.[9]))

As to Allegations
of Unavoidable Delay

The requirements for a grantable petition under 37 C.F.R. §1.137(a) are the petition and fee, a showing of unavoidable delay, a proper reply, and–where appropriate--a terminal disclaimer and fee.

Petitioner appears to have satisfied the regulatory requirements.

CONCLUSION

The petition under 37 C.F.R. §1.137(a) is **granted**.

---

[5] Therefore, by example, an unavoidable delay in the payment of the Filing Fee might occur if a reply is shipped by the US Postal Service, but due to catastrophic accident, the delivery is not made.

[6] See: *Changes to Patent Practice and Procedure*; *Final Rule Notice*, 62 *Fed. Reg.* at 53158-59 (October 10, 1997), 1203 *Off. Gaz. Pat. Office* at 86-87 (October 21, 1997).

[7] See: In re Application of G, 11 USPQ2d 1378, 1380 (Comm'r Pats. 1989).

[8] See: Diligence in Filing Petitions to Revive and Petitions to Withdraw the Holding of Abandonment, 1124 Off. Gaz. Pat. Office 33 (March 19, 1991). It was and is Petitioner's burden to exercise diligence in seeking either to have the holding of abandonment withdrawn or the application revived. See 1124 Off. Gaz. Pat. Office supra.

[9] Therefore, by example, an unintentional delay in the reply might occur if the reply and transmittal form are to be prepared for shipment by the US Postal Service, but other pressing matters distract one's attention and the mail is not timely deposited for shipment.

The instant application is forwarded to Technology Center 2800 for further procdessing in due course.

While telephone inquiries regarding this decision may be directed to the undersigned at (571) 272-3214, it is noted that all practice before the Office is in writing (see: 37 C.F.R. §1.2[10]) and the proper authority for action on any matter in this regard are the statutes (35 U.S.C.), regulations (37 C.F.R.) and the commentary on policy (MPEP). Therefore, no telephone discussion may be controlling or considered authority for Petitioner's action(s).

John J. Gillon, Jr.
Senior Attorney
Office of Petitions

[10] The regulations at 37 C.F.R. §1.2 provide:
§1.2 Business to be transacted in writing.
All business with the Patent and Trademark Office should be transacted in writing.The personal attendance of applicants or their attorneys or agents at the Patent and Trademark Office is unnecessary. The action of the Patent and Trademark Office will be based exclusively on the written record in the Office. No attention will be paid to any alleged oral promise, stipulation,or understanding in relation to which there is disagreement or doubt.

UNITED STATES PATENT AND TRADEMARK OFFICE

Commissioner for Patents
United States Patent and Trademark Office
P.O. Box 1450
Alexandria, VA 22313-1450
www.uspto.gov

MAILED

AUG 30 2004

DIRECTOR'S OFFICE
TECHNOLOGY CENTER 3600

ILYA ZBOROVSKY
6 SCHOOLHOUSE WAY
DIX HILLS, NY 11746

In re application of	:	**DECISION ON PETITION**
Sergei Aleksandrovich Shumov, et al	:	**TO MAKE SPECIAL**
Application No. 10/810,470	:	**(APPLICANT'S AGE)**
Filed: March 27, 2004	:	
For: ACTIVE PROTECTION SYSTEM		

This is a decision on the petition submitted on April 5, 2004 under 37 CFR 1.102 (c) to make the above-identified application special under the accelerated examination procedure set forth in MPEP 708.02, Section IV: Applicant's Age.

The petition is **GRANTED**.

An application may be accorded special status upon the filing of a petition providing evidence showing that the applicant is at least 65 years old. Such a showing may be provided by evidence such as a birth certificate or a statement from the applicant.

The evidence submitted with the petition is a copy of a passport indicating that Marina I. Poyhina is at least 65 years of age.

The examiner is directed (1) to make an interference search for possible interfering applications, (2) to promptly examine this application out of turn, and (3) if any interfering application is discovered, to examine such application simultaneously and state in the first official letter of such application that it is being taken out of turn because of a possible interference.

Petitioner is advised that this application will continue to be special, throughout its entire prosecution and pendency, including interference or appeal, if any, only if petitioner makes a prompt ***bona fide*** effort, in response to each Office action, to place the application in condition for allowance, even if it is necessary to conduct an interview with the examiner to accomplish this purpose.

SUMMARY: Petition to Make Special **GRANTED**.

Steven N. Meyers
Special Programs Examiner
Technology Center 3600
(703) 308-3868

SNM/dcg: 8/24/04

UNITED STATES PATENT AND TRADEMARK OFFICE

Commissioner for Patents
United States Patent and Trademark Office
P.O. Box 1450
Alexandria, VA 22313-1450
www.uspto.gov

Merchant & Gould, PC
P.O. Box 2903
Minneapolis, MN 55402-0903

COPY MAILED

MAY 0 1 2007

OFFICE OF PETITIONS

In re Application of

Palpu Pushpangadan et al.
Application No. 10/810,484
Filed: March 26, 2004
Attorney Docket No. 11378.59USW1

DECISION ON PETITION TO WITHDRAW FROM RECORD

This is a decision on the Request to Withdraw as attorney or agent of record under 37 C.F.R. § 1.36(b), filed January 22, 2007.

The request is **APPROVED**.

A grantable request to withdraw as attorney/agent of record must be signed by every attorney/agent seeking to withdraw or contain a clear indication that one attorney is signing on behalf of another/others. A request to withdraw will not be approved unless at least 30 (thirty) days would remain between the date of approval and the later of the expiration date of a time to file a response or the expiration date of the maximum time period which can be extended under 37 C.F.R. § 1.136(a).

The request was signed by Sarah M. Monfeldt, former attorney with the firm of Merchant & Gould, PC.

Sarah M. Monfeldt has been withdrawn as attorney or agent of record; all other attorneys remain of record.

The correspondence address of record remains unchanged.

A non-final rejection was mailed on February 26, 2007. Failure to timely respond will result in the abandonment of this application.

Telephone inquiries concerning this decision should be directed to Kimberly Inabinet at 571-272-4618.

Frances Hicks
Petitions Examiner
Office of Petitions

UNITED STATES PATENT AND TRADEMARK OFFICE

Commissioner for Patents
United States Patent and Trademark Office
P.O. Box 1450
Alexandria, VA 22313-1450
www.uspto.gov
DIW Feb-06

EDWARD L. BISHOP
FACTOR & LAKE, LTD
1327 W. WASHINGTON BLVD., SUITE 5 G/H
CHICAGO IL 60607

COPY MAILED
FEB 23 2006
OFFICE OF PETITIONS

In re Application of	:	
Raymond A. Liberatore	:	
Application No. 10/810,485	:	DECISION ON PETITION
Filed: 26 March, 2004	:	
For: SPREADER	:	

This is a decision on the petition filed on 29 July, 2005, under 37 CFR 1.137(b),[1] to revive the above-identified application.

The petition is **GRANTED**.

The application became abandoned on 9 August, 2004, for failure to timely reply to the Notice to File Missing Parts of Nonprovisional Application mailed on 8 June, 2004, which set a two (2) month shortened period for reply. No extensions of time

---

[1] Effective December 1, 1997, the provisions of 37 CFR 1.137(b) now provide that where the delay in reply was unintentional, a petition may be filed to revive an abandoned application or a lapsed patent pursuant to 37 CFR 1.137(b). A grantable petition filed under the provisions of 37 CFR 1.137(b) must be accompanied by:

(1) the required reply, unless previously filed. In a nonprovisional application abandoned for failure to prosecute, the required reply may be met by the filing of a continuing application. In a nonprovisional utility or plant application filed on or after June 8, 1995, and abandoned for failure to prosecute, the required reply may also be met by the filing of a request for continuing examination in compliance with § 1.114. In an application or patent, abandoned or lapsed for failure to pay the issue fee or any portion thereof, the required reply must be the payment of the issue fee or any outstanding balance thereof. In an application, abandoned for failure to pay the publication fee, the required reply must include payment of the publication fee.

(2) the petition fee as set forth in 37 CFR 1.17(m);

(3) a statement that the entire delay in filing the required reply from the due date for the reply until the filing of a grantable petition pursuant to 37 CFR 1.137(b) was unintentional. The Commissioner may required additional information where there is a question whether the delay was unintentional; and

(4) any terminal disclaimer (and fee as set forth in 37 CFR 1.20(d)) required pursuant to 37 CFR 1.137(c)).

under 37 CFR 1.136(a) were obtained. Notice of Abandonment was mailed on 17 February, 2005.

Petitioners have filed the statutory basic filing fee, an executed declaration under 37 CFR 1.63, the late-filing surcharge, and an abstract of the technical disclosure as required by the Notice mailed on 8 June, 2004.

The statement contained in the instant petition does not set forth that the entire delay from the due date of the required reply to the date of the filing of a grantable petition was unintentional as required by 37 CFR 1.137(b)(3). However, the statement contained in the instant petition is being so construed. Petitioner **must** notify the Office if this is not a correct interpretation.

This application is being referred to the Office of Initial Patent Examination for further processing.

Telephone inquiries concerning this matter may be directed to the undersigned at (571)272-3231.

Douglas I. Wood
Senior Petitions Attorney
Office of Petitions

UNITED STATES PATENT AND TRADEMARK OFFICE

Commissioner for Patents
United States Patent and Trademark Office
P.O. Box 1450
Alexandria, VA 22313-1450
www.uspto.gov

Darby & Darby, PC
P.O. Box 770
Church Street Station
New York, NY 10008-0770

COPY MAILED

NOV 2 1 2007

OFFICE OF PETITIONS

In re Application of
Yoshikazu Okada, et. al.
Application No. 10/810,491
Filed: March 26, 2004
Attorney Docket No. 20154/0201085-US0

ON PETITION

This is a decision on the petition under 37 CFR 1.137(b), filed September 19, 2006, which is being treated as a petition under 37 CFR 1.181 to withdraw the holding of abandonment. The delay in responding is regretted.

The petition is **GRANTED**.

The record shows that a Notice of Appeal was filed on December 23, 2005. However, a Pre-Brief Appeal Conference Decision was mailed on March 20, 2006, which reset the time frame to be one month from the mailing of the decision or the balance of the two-month time limit from the receipt date of the notice of appeal, whichever was greater. Since petitioner could obtain an extension of time up to five months, the due date for the reply to the Pre-Brief Appeal Conference decision was due on September 20, 2006. Therefore, this application was held abandoned prematurely.

In view of the above, the holding of abandonment is hereby withdrawn and the Notice of Abandonment is hereby vacated.

It is acknowledged that petitioner submitted a Request for Continued Examination (RCE) under 37 CFR 1.114 on September 19, 2006. Therefore, the application file is being referred to Technology Center Art Unit 1742 for further processing.

The file does not indicate a change of address has been submitted, although the address given on the petition differs from the address of record. If appropriate, a change of address should be filed in accordance with MPEP 601.03. A courtesy copy of this decision is being mailed to the address given on the petition; however, the Office will mail all future correspondence solely to the address of record.

Inquiries concerning this decision may be directed to the undersigned at (571) 272-3226.

Andrea Smith
Petitions Examiner
Office of Petitions

cc: Louis J. DelJuidice
Darby & Darby, PC
P.O. Box 5257
New York, NY 10150-5257

UNITED STATES PATENT AND TRADEMARK OFFICE

UNITED STATES DEPARTMENT OF COMMERCE
United States Patent and Trademark Office
Address: COMMISSIONER FOR PATENTS
P.O. Box 1450
Alexandria, Virginia 22313-1450
www.uspto.gov

INDIANAPOLIS OFFICE 27879
BRINKS HOFER GILSON & LIONE
CAPITAL CENTER, SUITE 1100
201 NORTH ILLINOIS STREET
INDIANAPOLIS, IN 46204-4220

Mail Date: 04/26/2010

Applicant	: Masayuki Tsuda	: DECISION ON REQUEST FOR
Patent Number	: 7647075	: RECALCULATION of PATENT
Issue Date	: 01/12/2010	: TERM ADJUSTMENT IN VIEW
Application No	: 10/810,499	: OF WYETH AND NOTICE OF INTENT TO
Filed	: 03/26/2004	: ISSUE CERTIFICATE OF CORRECTION
		:

The Request for Recalculation is **GRANTED** to the extent indicated.

The patent term adjustment has been determined to be **116** days. The USPTO will *sua sponte* issue a certificate of correction reflecting the amount of PTA days determined by the recalculation.

Prior to the issuance of the certificate of correction, the USPTO will afford patentee an opportunity to be heard and request reconsideration. Accordingly, patentee has **one month or thirty (30) days**, whichever is longer, to file a request for reconsideration of this patent term adjustment calculation. See 35 U.S.C. 154(b)(3)(B)(ii) and 37 CFR 1.322(a)(4). No extensions of time will be granted under 37 CFR 1.136.

Patentee should use document code PET.OP if electronically filing a request for reconsideration of this patent term adjustment calculation. The patentee must also include the information required by 37 CFR 1.705(b)(2) and the fee required by 37 CFR 1.18(e). If patentee does not file a timely request for reconsideration of this patent term adjustment calculation including the information required by 37 CFR 1.705(b)(2) and the fee required by 37 CFR 1.18(e), the USPTO will issue a certificate of correction reflecting the PTA determination noted above.

Patentee should be aware that in order to preserve the right to review in the United States District Court for the District of Columbia of the USPTO patent term adjustment determination, patentee must ensure that he or she also take the steps required under 35 U.S.C. 154(b)(4)(A) in a timely manner. Nothing in the request for recalculation should be construed as providing an alternative time frame for commencing a civil action under 35 U.S.C. 154(b)(4)(A).

Any questions concerning this decision should be directed to the Office of Patent Legal Administration at 571-272-7702.

UNITED STATES PATENT AND TRADEMARK OFFICE

Commissioner for Patents
United States Patent and Trademark Office
P.O. Box 1450
Alexandria, VA 22313-1450
www.uspto.gov

MAILED

AUG 17 2004

Director's Office
Group 3700

Dennis J.M. Donahue
HUSCH & EPPENBERGER, LLC
190 Carondelet Plaza, Suite 600
St. Louis, Missouri 63105

In re application of Heizer, Charles K	: : :	**DECISION ON PETITION** **TO MAKE SPECIAL** **UNDER 37 CFR. 1.102(c)**
Serial Number: 10/810513 Filed: March 27, 2004	: :	

For: **GAPLESS SCREW ROTOR DEVICE**

This is a decision on the petition filed on March 27, 2004, under 37 CFR. 1.102(c) to make special the above identified application because of the age/health of the applicant. Since the requirements of the M.P.E.P Section 708.02 IV have been met, the petition will be GRANTED.

The examiner is directed (1) to make an interference search for possible interfering applications, (2) to promptly examine this application out of turn, and (3) if any interfering application is discovered, to examine such application simultaneously and state in the first official letter of such application that it is being taken out of turn because of a possible interference.

Petitioner is advised that this application will continue to be special, throughout its entire prosecution and pendency, including interference or appeal, if any, only is Petitioner makes a prompt bona-fide effort, in response to each Office action, to place the application in condition for allowance, even if it is necessary to conduct an interview with the Examiner to accomplish this purpose.

Summary: Decision on Petition **GRANTED**.

Richard A. Bertsch
Director
Technology Center 3700
(703) 308-0975

rt: 8/16/04

UNITED STATES PATENT AND TRADEMARK OFFICE

UNITED STATES DEPARTMENT OF COMMERCE
United States Patent and Trademark Office
Address: COMMISSIONER FOR PATENTS
P.O. Box 1450
Alexandria, Virginia 22313-1450
www.uspto.gov

BAKER BOTTS L.L.P.
2001 ROSS AVENUE
SUITE 600
DALLAS, TX 75201-2980

Mail Date: 04/20/2010

Applicant	: James R. Tighe	: DECISION ON REQUEST FOR
Patent Number	: 7590231	: RECALCULATION of PATENT
Issue Date	: 09/15/2009	: TERM ADJUSTMENT IN VIEW
Appliction No	: 10/810,516	: OF WYETH AND NOTICE OF INTENT TO
Filed	: 03/26/2004	: ISSUE CERTIFICATE OF CORRECTION
		:

The Request for Recalculation is **GRANTED** to the extent indicated.

The patent term adjustment has been determined to be **1573** days. The USPTO will *sua sponte* issue a certificate of correction reflecting the amount of PTA days determined by the recalculation.

Prior to the issuance of the certificate of correction, the USPTO will afford patentee an opportunity to be heard and request reconsideration. Accordingly, patentee has **one month or thirty (30) days**, whichever is longer, to file a request for reconsideration of this patent term adjustment calculation. See 35 U.S.C. 154(b)(3)(B)(ii) and 37 CFR 1.322(a)(4). No extensions of time will be granted under 37 CFR 1.136.

Patentee should use document code PET.OP if electronically filing a request for reconsideration of this patent term adjustment calculation. The patentee must also include the information required by 37 CFR 1.705(b)(2) and the fee required by 37 CFR 1.18(e). If patentee does not file a timely request for reconsideration of this patent term adjustment calculation including the information required by 37 CFR 1.705(b)(2) and the fee required by 37 CFR 1.18(e), the USPTO will issue a certificate of correction reflecting the PTA determination noted above.

Patentee should be aware that in order to preserve the right to review in the United States District Court for the District of Columbia of the USPTO patent term adjustment determination, patentee must ensure that he or she also take the steps required under 35 U.S.C. 154(b)(4)(A) in a timely manner. Nothing in the request for recalculation should be construed as providing an alternative time frame for commencing a civil action under 35 U.S.C. 154(b)(4)(A).

Any questions concerning this decision should be directed to the Office of Patent Legal Administration at 571-272-7702.

UNITED STATES PATENT AND TRADEMARK OFFICE

UNITED STATES DEPARTMENT OF COMMERCE
United States Patent and Trademark Office
Address: COMMISSIONER FOR PATENTS
P.O. Box 1450
Alexandria, Virginia 22313-1450
www.uspto.gov

Pabst Patent Group LLP
1545 PEACHTREE STREET NE
SUITE 320
ATLANTA, GA 30309

Mail Date: 04/21/2010

Applicant	: Thomas H. Barrows	: DECISION ON REQUEST FOR
Patent Number	: 7597885	: RECALCULATION of PATENT
Issue Date	: 10/06/2009	: TERM ADJUSTMENT IN VIEW
Appliction No	: 10/810,518	: OF WYETH AND NOTICE OF INTENT TO
Filed	: 03/26/2004	: ISSUE CERTIFICATE OF CORRECTION
		:

The Request for Recalculation is **GRANTED** to the extent indicated.

The patent term adjustment has been determined to be **548** days. The USPTO will *sua sponte* issue a certificate of correction reflecting the amount of PTA days determined by the recalculation.

Prior to the issuance of the certificate of correction, the USPTO will afford patentee an opportunity to be heard and request reconsideration. Accordingly, patentee has **one month or thirty (30) days**, whichever is longer, to file a request for reconsideration of this patent term adjustment calculation. See 35 U.S.C. 154(b)(3)(B)(ii) and 37 CFR 1.322(a)(4). No extensions of time will be granted under 37 CFR 1.136.

Patentee should use document code PET.OP if electronically filing a request for reconsideration of this patent term adjustment calculation. The patentee must also include the information required by 37 CFR 1.705(b)(2) and the fee required by 37 CFR 1.18(e). If patentee does not file a timely request for reconsideration of this patent term adjustment calculation including the information required by 37 CFR 1.705(b)(2) and the fee required by 37 CFR 1.18(e), the USPTO will issue a certificate of correction reflecting the PTA determination noted above.

Patentee should be aware that in order to preserve the right to review in the United States District Court for the District of Columbia of the USPTO patent term adjustment determination, patentee must ensure that he or she also take the steps required under 35 U.S.C. 154(b)(4)(A) in a timely manner. Nothing in the request for recalculation should be construed as providing an alternative time frame for commencing a civil action under 35 U.S.C. 154(b)(4)(A).

Any questions concerning this decision should be directed to the Office of Patent Legal Administration at 571-272-7702.

UNITED STATES PATENT AND TRADEMARK OFFICE

Commissioner for Patents
United States Patent and Trademark Office
P.O. Box 1450
Alexandria, VA 22313-1450
www.uspto.gov

FISH & RICHARDSON PC
P.O. BOX 1022
MINNEAPOLIS, MN 55440-1022

COPY MAILED
JUL 0 3 2006
OFFICE OF PETITIONS

In re Application of :
Thomas A. Froeschle et al :
Application No. 10/810,538 : ON PETITION
Filed: March 26, 2004 :
Attorney Docket No. 02103-212001

This is a decision on the petition filed, June 30, 2006 under 37 CFR 1.313(c)(2) to withdraw the above-identified application from issue after payment of the issue fee.

The petition is **GRANTED**.

The above-identified application is withdrawn from issue for consideration of a submission under 37 CFR 1.114 (request for continued examination). See 37 CFR 1.313(c)(2).

Petitioner is advised that the issue fee paid on May 22, 2006 in the above-identified application cannot be refunded. If, however, the above-identified application is again allowed, petitioner may request that it be applied towards the issue fee required by the new Notice of Allowance.[1]

Telephone inquiries should be directed to Irvin Dingle at (571) 272-3210.

This matter is being referred to Technology Center AU 3748 for processing of the request for continued examination under 37 CFR 1.114 and for consideration of the concurrently filed Information Disclosure Statement.

Irvin Dingle
Petitions Examiner
Office of Petitions

cc: Fish & Richardson P.C.
225 Franklin Street
Boston, MA 02110

---

[1] The request to apply the issue fee to the new Notice may be satisfied by completing and returning the new Issue Fee Transmittal Form PTOL-85(b), which includes the following language thereon: Commissioner for Patents is requested to apply the Issue Fee and Publication Fee (if any) or re-apply any previously paid issue fee to the application identified above. Petitioner is advised that, whether a fee is indicated as being due or not, the Issue Fee Transmittal Form **must** be completed and timely submitted to avoid abandonment. Note the language in bold text on the first page of the Notice of Allowance and Fee(s) Due (PTOL-85).

UNITED STATES PATENT AND TRADEMARK OFFICE

Commissioner for Patents
United States Patent and Trademark Office
P.O. Box 1450
Alexandria, VA 22313-1450
www.uspto.gov

WHYTE HIRSCHBOECK DUDEK SC
555 EAST WELLS STREET
SUITE 1900
MILWAUKEE WI 53202

COPY MAILED

OCT 19 2006

OFFICE OF PETITIONS

In re Patent No. 6,964,323 :
Issue Date: November 15, 2005 :
Application No. 10/810,540 :
Filed: March 26, 2004 :
Attorney Docket No. HBR-32270(1) :

NOTICE

This is a notice regarding your request for acceptance of a fee deficiency submission under 37 CFR 1.28. On September 1, 1998, the Court of Appeals for the Federal Circuit held that 37 CFR 1.28(c) is the sole provision governing the time for correction of the erroneous payment of the issue fee as a small entity. **See DH Technology v. Synergystex International, Inc. 154 F.3d 1333, 47 USPQ2d 1865 (Fed. Cir. Sept. 1, 1998).**

The Office no longer investigates or rejects original or reissue applications under 37 CFR 1.56. **1098 Off. Gaz. Pat. Office 502 (January 3, 1989).** Therefore, nothing in this Notice is intended to imply that an investigation was done.

Your fee deficiency submission under 37 CFR 1.28 is hereby **ACCEPTED**.

This application no longer qualifies for small entity status. Accordingly, all future fees must be paid at the large entity rate.

Inquiries related to this communication should be directed to the undersigned at (571) 272-3208.

Karen Creasy

Karen Creasy
Petitions Examiner
Office of Petitions

UNITED STATES PATENT AND TRADEMARK OFFICE

Commissioner for Patents
United States Patent and Trademark Office
P.O. Box 1450
Alexandria, VA 22313-1450
www.uspto.gov

CHARLES I. BRODSKY, ESQ.
2 BUCKS LANE
MARLBORO NJ 07746

COPY MAILED

APR 29 2008

OFFICE OF PETITIONS

In re Application of	:	
Bernard K. Simcovitch	:	
Application No. 10/810,544	:	ON PETITION
Filed: March 29, 2004	:	
Attorney Docket No. 5515	:	

This is a decision on the petition under 37 CFR 1.137(b), filed June 15, 2007, to revive the above-identified application.

The petition is **DISMISSED.**

Any request for reconsideration of this decision must be submitted within TWO (2) MONTHS from the mail date of this decision. Extensions of time under 37 CFR 1.136(a) are permitted. The reconsideration request should include a cover letter entitled "**Renewed Petition under 37 CFR 1.137(b)**." This is **not** final agency action within the meaning of 5 U.S.C. § 704.

A grantable petition under 37 CFR 1.137(b) must be accompanied by: (1) the required reply, unless previously filed; (2) the petition fee as set forth in 37 CFR 1.17(m); (3) a statement that the entire delay in filing the required reply from the due date for the reply until the filing of a grantable petition pursuant to 37 CFR 1.137(b) was unintentional; and (4) any terminal disclaimer (and fee as set forth in 37 CFR 1.20(d)) required by 37 CFR 1.137(c). Where there is a question as to whether either the abandonment or the delay in filing a petition under 37 CFR 1.137 was unintentional, the Commissioner may require additional information. See MPEP 711.03(c)(III)(C) and (D). The instant petition lack(s) item(s) **(1) and (3)**.

The above-identified application became abandoned for failure to reply within the meaning of 37 CFR 1.113 in a timely manner to the final Office action mailed May 20, 2004, which set a shortened statutory period for reply of three (3) months. A reply under 37 CFR 1.113 is limited to an amendment that *prima facie* places the application in condition for allowance or a Notice of Appeal (and appeal fee required by 37 CFR 1.17(b)). No amendment *prima facie* placing the application in condition for allowance or Notice of Appeal (and appeal fee) was timely filed. Therefore, the above-identified application became abandoned.

An extension of time under 37 CFR 1.136 must be filed prior to the expiration of the maximum extendable period for reply. *See* In re Application of S., 8 USPQ2d 1630, 1631 (Comm'r Pats. 1988). Since the $570 extension of time fee submitted with the petition on June 15, 2007 was subsequent to the maximum extendable period for reply, this fee is unnecessary. Petitioner may request a refund of this fee by writing to the Office of Finance, Refund Section. A copy of this decision should accompany petitioner's request.

Further correspondence with respect to this matter should be addressed as follows:

By mail: Mail Stop PETITION
Commissioner for Patents
Post Office Box 1450
Alexandria, VA 22313-1450

By hand: Customer Service Window
Randolph Building
401 Dulany Street
Alexandria, VA 22314

By facsimile: (571) 272-8300
ATTN: Office of Petitions

Telephone inquiries concerning this decision should be directed to the undersigned at (571) 272-3208.

Karen Creasy
Petitions Examiner
Office of Petitions

Attachment: Advisory Action

Advisory Action Before the Filing of an Appeal Brief	Application No. 10/810,544	Applicant(s) SIMCOVITCH, BERNARD K.	
	Examiner ROBIN HYLTON	Art Unit 3781	

--The MAILING DATE of this communication appears on the cover sheet with the correspondence address --

THE REPLY FILED 03 October 2006 FAILS TO PLACE THIS APPLICATION IN CONDITION FOR ALLOWANCE.

1. ☒ The reply was filed after a final rejection, but prior to or on the same day as filing a Notice of Appeal. To avoid abandonment of this application, applicant must timely file one of the following replies: (1) an amendment, affidavit, or other evidence, which places the application in condition for allowance; (2) a Notice of Appeal (with appeal fee) in compliance with 37 CFR 41.31; or (3) a Request for Continued Examination (RCE) in compliance with 37 CFR 1.114. The reply must be filed within one of the following time periods:
   a) ☒ The period for reply expires 6 months from the mailing date of the final rejection.
   b) ☐ The period for reply expires on: (1) the mailing date of this Advisory Action, or (2) the date set forth in the final rejection, whichever is later. In no event, however, will the statutory period for reply expire later than SIX MONTHS from the mailing date of the final rejection.

   Examiner Note: If box 1 is checked, check either box (a) or (b). ONLY CHECK BOX (b) WHEN THE FIRST REPLY WAS FILED WITHIN TWO MONTHS OF THE FINAL REJECTION. See MPEP 706.07(f).

Extensions of time may be obtained under 37 CFR 1.136(a). The date on which the petition under 37 CFR 1.136(a) and the appropriate extension fee have been filed is the date for purposes of determining the period of extension and the corresponding amount of the fee. The appropriate extension fee under 37 CFR 1.17(a) is calculated from: (1) the expiration date of the shortened statutory period for reply originally set in the final Office action; or (2) as set forth in (b) above, if checked. Any reply received by the Office later than three months after the mailing date of the final rejection, even if timely filed, may reduce any earned patent term adjustment. See 37 CFR 1.704(b).

NOTICE OF APPEAL

2. ☐ The Notice of Appeal was filed on _____. A brief in compliance with 37 CFR 41.37 must be filed within two months of the date of filing the Notice of Appeal (37 CFR 41.37(a)), or any extension thereof (37 CFR 41.37(e)), to avoid dismissal of the appeal. Since a Notice of Appeal has been filed, any reply must be filed within the time period set forth in 37 CFR 41.37(a).

AMENDMENTS

3. ☐ The proposed amendment(s) filed after a final rejection, but prior to the date of filing a brief, will not be entered because
   (a) ☐ They raise new issues that would require further consideration and/or search (see NOTE below);
   (b) ☐ They raise the issue of new matter (see NOTE below);
   (c) ☐ They are not deemed to place the application in better form for appeal by materially reducing or simplifying the issues for appeal; and/or
   (d) ☐ They present additional claims without canceling a corresponding number of finally rejected claims.

   NOTE: _____. (See 37 CFR 1.116 and 41.33(a)).
4. ☐ The amendments are not in compliance with 37 CFR 1.121. See attached Notice of Non-Compliant Amendment (PTOL-324).
5. ☐ Applicant's reply has overcome the following rejection(s): _____.
6. ☐ Newly proposed or amended claim(s) _____ would be allowable if submitted in a separate, timely filed amendment canceling the non-allowable claim(s).
7. ☒ For purposes of appeal, the proposed amendment(s): a) ☒ will not be entered, or b) ☐ will be entered and an explanation of how the new or amended claims would be rejected is provided below or appended.
   The status of the claim(s) is (or will be) as follows:
   Claim(s) allowed: _____.
   Claim(s) objected to: _____.
   Claim(s) rejected: *4-12 and 15-17*.
   Claim(s) withdrawn from consideration: _____.

AFFIDAVIT OR OTHER EVIDENCE

8. ☐ The affidavit or other evidence filed after a final action, but before or on the date of filing a Notice of Appeal will not be entered because applicant failed to provide a showing of good and sufficient reasons why the affidavit or other evidence is necessary and was not earlier presented. See 37 CFR 1.116(e).
9. ☐ The affidavit or other evidence filed after the date of filing a Notice of Appeal, but prior to the date of filing a brief, will not be entered because the affidavit or other evidence failed to overcome all rejections under appeal and/or appellant fails to provide a showing a good and sufficient reasons why it is necessary and was not earlier presented. See 37 CFR 41.33(d)(1).
10. ☐ The affidavit or other evidence is entered. An explanation of the status of the claims after entry is below or attached.

REQUEST FOR RECONSIDERATION/OTHER

11. ☐ The request for reconsideration has been considered but does NOT place the application in condition for allowance because: _____.
12. ☐ Note the attached Information *Disclosure Statement*(s). (PTO/SB/08) Paper No(s). _____
13. ☒ Other: See Continuation Sheet.

/ROBIN HYLTON/
Primary Examiner, Art Unit 3781

Continuation of 13. Other: Proposed drawing Fig. 5 introduces new matter since it is unclear if this was applicant's original intent and/or if this is the only way to depict the claimed invention. .

UNITED STATES PATENT AND TRADEMARK OFFICE

Commissioner for Patents
United States Patent and Trademark Office
P.O. Box 1450
Alexandria, VA 22313-1450
www.uspto.gov

MERCHANT & GOULD PC
P.O. BOX 2903
MINNEAPOLIS MN 55402-0903

COPY MAILED

NOV 17 2004

OFFICE OF PETITIONS

In re Reissue Application No. 10/810,547	:
Filed: March 26, 2004	:
Original Patent No 6,363,200	:
Issue Date: March 26, 2002	: DECISION GRANTING STATUS
Original Application No. 09/689,989	: UNDER 37 CFR 1.47(a)
Filed: October 13, 2000	:
Inventor: Thompson, Johnson, Tischler	:
	:

This is a decision on the petition filed September 27, 2004, under 37 CFR 1.47(a) to accord this reissue application status in the absence of the signature of joint inventor Johnson.

The petition under 37 CFR 1.47(a) to accord this reissue application status is **granted.**

The application and papers have been reviewed and found in compliance with 37 CFR 1.47(a). This application is hereby accorded Rule 1.47(a) status and the Office of Initial Patent Examination is authorized to

(1) accept this application under 37 CFR 1.47(a);

(2) process the application with the inventors being Thompson, Johnson, and Tischler, using the reissue oath/declaration filed September 27, 2004; and

(3) mail a filing receipt with a filing date of March 26, 2004.

As provided in Rule 1.47(a), this Office will forward notice of this application's filing date to non-signing inventor Johnson at the address given in the petition. Notice of the filing of this application will also be published in the *Official Gazette.*

Telephone inquiries related to this decision should be directed to the undersigned at (571) 272-3217.

Brian Hearn

Brian Hearn
Petitions Examiner
Office of Petitions
Office of the Deputy Commissioner
for Patent Examination Policy

UNITED STATES PATENT AND TRADEMARK OFFICE

Commissioner for Patents
United States Patent and Trademark Office
P.O. Box 1450
Alexandria, VA 22313-1450
www.uspto.gov

MERCHANT & GOULD PC
P.O. BOX 2903
MINNEAPOLIS MN 55402-0903

COPY MAILED

NOV 17 2004

OFFICE OF PETITIONS

In re Application of Patrick Thompson, Brian L. Johnson and Anthony Tischler Application No.10/810,547 Filed: March 26, 2004 Attorney Docket Number: 2316.926USRE Title of Invention: OUTSIDE PLANT FIBER DISTRIBUTION APPARATUS AND METHOD	DECISION GRANTING STATUS UNDER 37 CFR 1.47(a)

This is in response to the petition under 37 CFR 1.47(a), filed September 27, 2004.

The petition is GRANTED.

Petitioner has shown that the non-signing inventor has refused to join in the filing of the above-identified application after having been presented with the reissue application papers. The petition attest a copy of the reissue application was presented to non-signing inventor. A letter from inventor's representative establishes the reissue application papers were received. The non-signing inventor's failure to respond to the application sufficiently establishes that he refuses to execute the application papers.

The above-identified application and papers have been reviewed and found in compliance with 37 CFR 1.47(a). This application is hereby accorded Rule 1.47(a) status.

As provided in Rule 1.47(c), this Office will forward notice of this application's filing to the non-signing inventor at the address given in the petition. Notice of the filing of this reissue application will also be published in the Official Gazette.

This application is being forwarded to the Office of Initial Patent Examination for further processing.

Telephone inquiries related to this decision may be directed to the undersigned at (571) 272-3215.

Charlema R. Grant
Petitions Attorney
Office of Petitions

UNITED STATES PATENT AND TRADEMARK OFFICE

Commissioner for Patents
United States Patent and Trademark Office
P.O. Box 1450
Alexandria, VA 22313-1450
www.uspto.gov

COPY MAILED

OCT 25 2007

OFFICE OF PETITIONS

MERCHANT & GOULD PC
P.O. BOX 2903
MINNEAPOLIS MN 55402-0903

In re Application of	:	
Tnompson et al	:	DECISION DISMISSING
Appl. No. 10/810,547	:	PETITION UNDER
Filed: March 26, 2004	:	37 CFR 1.183
	:	

This is a decision on the May 30, 2007 renewed petition filed under 37 CFR 1.47, which is taken as a petition under 37 CFR 1.183 [1] requesting suspension or waiver of the regulations (presumably 37 CFR 1.172) that require the named inventors to sign any supplemental declaration in a broadening reissue application.

The petition is **dismissed as moot**.

BACKGROUND

1. U.S. Patent No. 6,363,200 (the '200 patent) issued to Thompson, Johnson and Tischler on March 26, 2002.

2. A broadening reissue application (the present application) was filed for the '200 patent on March 26, 2004, and it was assigned application number 10/810,547.

3. A petition filed under 37 CFR 1.47 was granted on November 17, 2004. Rule 47 status was granted for non-signing inventor Johnson.

4. During the prosecution of the application, the Office required a supplemental reissue declaration directed to errors in the original patent which were corrected in the application after the signing of the original reissue

[1] Once an application has received a properly executed oath or declaration and such has been placed on the files for examination, the provisions of 37 CFR 1.47 no longer apply. Rather, the remedy for treating an inventor's refusal to also sign a supplemental oath or declaration is waiver of 37 CFR 1.67. See MPEP 603. In addition, if a joint inventor refuses or cannot be found or reached to sign a supplemental oath/declaration, a supplemental oath/declaration listing all the inventors, and signed by all the available inventors may be filed provided it is accompanied by a petition under 37 CFR 1.183 along with the petition fee, requesting waiver of the signature requirement of the nonsigning inventor. See MPEP 1414.01

declaration.

5. On May 29, 2007, applicant filed the present petition under 37 CFR 1.47, which is being taken as a petition under 37 CFR 1.183 requesting suspension or waiver of the "regulations pertaining to the filing of a Supplemental Declaration under 37 C.F.R. § 1.175" that require a supplemental reissue declaration to be signed by the inventors.

5. The petition is accompanied by a Supplemental Reissue Application Declaration by inventors Thompson and Tischler signed May 2007. It is for this supplemental declaration that the petition requests acceptance, via suspension or waiver of the regulations.

DECISION

The provisions of 35 U.S.C. 251, which are directed to reissue of patents, do not address the signature requirements of a declaration or oath in reissue. As to the reissue regulations, 37 CFR 1.172 requires that a reissue declaration or oath be made (and signed) by the inventors, except as otherwise provided (37 CFR §§ 1.42, 1.43, 1.47), where the scope of the claims of the original patent is being enlarged. In addition, 37 CFR 1.175(b)(1), requires that:

> "For any error corrected, which is not covered by the oath or declaration submitted under paragraph (a) of this section, applicant must submit **a supplemental oath or declaration** stating that every such error arose without any deceptive intention on the part of the applicant." [Emphasis added]

37 CFR 1.175(b)(1), taken in conjunction with 37 CFR 1.172, requires that a supplemental oath or declaration be signed by the inventor(s). This is because all oaths or declarations necessary to fulfill the rule requirements in a reissue application are taken together collectively as a single oath or declaration. *See In re Hayes*, 53 USPQ2d 1222 (Comm'r Pat. 1999)(reported, but unpublished). Thus, each oath and/or declaration must bear the appropriate signatures of the inventors.

In the present instance, the supplemental declaration is not signed by the one inventor who failed to execute the original reissue declaration (i.e., inventor Johnson). Since this application was previously granted Rule 47 status pursuant to 37 CFR 1.47, Petitioner is not required to obtain the signature of Johnson on the supplemental reissue declaration. Accordingly, <u>the petition is moot</u>, and is dismissed as such.

Jurisdiction over this application is being forwarded to Art Unit 2872 for review of the supplemental declaration submitted with the petition.[2]

Please direct any questions related to this decision to Petitions Attorney Charlema R. Grant, at (571) 272-3215.

Kenneth M. Schor
Senior Legal Advisor
Office of Patent Legal Administration
Office of Petitions

---

[2] This decision takes no position on the propriety of the supplemental declaration, aside from the signing of the named inventors. Any issues raised by the declaration will be addressed by the examiner in the next Office action.

UNITED STATES PATENT AND TRADEMARK OFFICE

UNITED STATES DEPARTMENT OF COMMERCE
United States Patent and Trademark Office
Address: COMMISSIONER FOR PATENTS
P.O. Box 1450
Alexandria, Virginia 22313-1450
www.uspto.gov

ABELMAN, FRAYNE & SCHWAB
666 THIRD AVENUE, 10TH FLOOR
NEW YORK, NY 10017

Mail Date: 04/21/2010

Applicant	: Yehia A. Massoud	: DECISION ON REQUEST FOR
Patent Number	: 7621744	: RECALCULATION of PATENT
Issue Date	: 11/24/2009	: TERM ADJUSTMENT IN VIEW
Appliction No	: 10/810,553	: OF WYETH AND NOTICE OF INTENT TO
Filed	: 03/29/2004	: ISSUE CERTIFICATE OF CORRECTION
		:

The Request for Recalculation is **GRANTED** to the extent indicated.

The patent term adjustment has been determined to be **1379** days. The USPTO will *sua sponte* issue a certificate of correction reflecting the amount of PTA days determined by the recalculation.

Prior to the issuance of the certificate of correction, the USPTO will afford patentee an opportunity to be heard and request reconsideration. Accordingly, patentee has **one month or thirty (30) days**, whichever is longer, to file a request for reconsideration of this patent term adjustment calculation. See 35 U.S.C. 154(b)(3)(B)(ii) and 37 CFR 1.322(a)(4). No extensions of time will be granted under 37 CFR 1.136.

Patentee should use document code PET.OP if electronically filing a request for reconsideration of this patent term adjustment calculation. The patentee must also include the information required by 37 CFR 1.705(b)(2) and the fee required by 37 CFR 1.18(e). If patentee does not file a timely request for reconsideration of this patent term adjustment calculation including the information required by 37 CFR 1.705(b)(2) and the fee required by 37 CFR 1.18(e), the USPTO will issue a certificate of correction reflecting the PTA determination noted above.

Patentee should be aware that in order to preserve the right to review in the United States District Court for the District of Columbia of the USPTO patent term adjustment determination, patentee must ensure that he or she also take the steps required under 35 U.S.C. 154(b)(4)(A) in a timely manner. Nothing in the request for recalculation should be construed as providing an alternative time frame for commencing a civil action under 35 U.S.C. 154(b)(4)(A).

Any questions concerning this decision should be directed to the Office of Patent Legal Administration at 571-272-7702.

UNITED STATES PATENT AND TRADEMARK OFFICE

UNITED STATES DEPARTMENT OF COMMERCE
United States Patent and Trademark Office
Address: COMMISSIONER FOR PATENTS
P.O. Box 1450
Alexandria, Virginia 22313-1450
www.uspto.gov

WESTERMAN, HATTORI, DANIELS & ADRIAN, LLP
1250 CONNECTICUT AVENUE, NW
SUITE 700
WASHINGTON, DC 20036

Mail Date: 04/23/2010

Applicant	: Yoshifumi Tanimoto	: DECISION ON REQUEST FOR
Patent Number	: 7631049	: RECALCULATION of PATENT
Issue Date	: 12/08/2009	: TERM ADJUSTMENT IN VIEW
Application No	: 10/810,594	: OF WYETH AND NOTICE OF INTENT TO
Filed	: 03/29/2004	: ISSUE CERTIFICATE OF CORRECTION
		:

The Request for Recalculation is **GRANTED** to the extent indicated.

The patent term adjustment has been determined to be **1366** days. The USPTO will *sua sponte* issue a certificate of correction reflecting the amount of PTA days determined by the recalculation.

Prior to the issuance of the certificate of correction, the USPTO will afford patentee an opportunity to be heard and request reconsideration. Accordingly, patentee has **one month or thirty (30) days**, whichever is longer, to file a request for reconsideration of this patent term adjustment calculation. See 35 U.S.C. 154(b)(3)(B)(ii) and 37 CFR 1.322(a)(4). No extensions of time will be granted under 37 CFR 1.136.

Patentee should use document code PET.OP if electronically filing a request for reconsideration of this patent term adjustment calculation. The patentee must also include the information required by 37 CFR 1.705(b)(2) and the fee required by 37 CFR 1.18(e). If patentee does not file a timely request for reconsideration of this patent term adjustment calculation including the information required by 37 CFR 1.705(b)(2) and the fee required by 37 CFR 1.18(e), the USPTO will issue a certificate of correction reflecting the PTA determination noted above.

Patentee should be aware that in order to preserve the right to review in the United States District Court for the District of Columbia of the USPTO patent term adjustment determination, patentee must ensure that he or she also take the steps required under 35 U.S.C. 154(b)(4)(A) in a timely manner. Nothing in the request for recalculation should be construed as providing an alternative time frame for commencing a civil action under 35 U.S.C. 154(b)(4)(A).

Any questions concerning this decision should be directed to the Office of Patent Legal Administration at 571-272-7702.

UNITED STATES PATENT AND TRADEMARK OFFICE

Commissioner for Patents
United States Patent and Trademark Office
P.O. Box 1450
Alexandria, VA 22313-1450
www.uspto.gov

COPY MAILED

APR 21 2009

OFFICE OF PETITIONS

David H. Shen
21037 Dorsey Way
Saratoga, CA 95070

In re Application of Shen :
Application No. 10/810,603 :
Filing Date: March 29, 2004 :
For: Continuous-Time Multi-Gigahertz :
Filter Using Transmission Line :
Delay Elements :

Decision on Petition

This is a decision on the petition under 37 CFR 1.137(b), filed January 22, 2009, to revive the above-identified application.

The petition is **granted**.

Facts

The Office mailed a non-final Office action on March 3, 2008. The non-final Office action set a shortened statutory period for reply of three (3) months.

The non-final Office action indicating extensions of time could be obtained but "In no event, however, may a reply be timely filed after SIX (6) MONTHS from the mailing date of this communication."

A request for a five-month extension of time and a $1,115 payment for the extension of time were filed May 23, 2008. Since the time period set forth in the March 3, 2008 Office action could only be extended, at most, by three months, the May 23, 2008 request extended the due date for reply to September 3, 2008.

A reply was not filed on or before September 3, 2008. As a result, the application became abandoned as of September 4, 2008.

A reply to the March 3, 2008 Office action was filed November 3, 2008. However, the reply was not entered because the reply was filed beyond the extended time period for reply to the March 3, 2008 Office action.

A Notice of Abandonment was mailed January 12, 2009.

Opinion

The instant petition requests revival of the application.

A grantable petition under 37 CFR 1.137(b) must be accompanied by:

(1) the reply required to the outstanding Office action or notice, unless previously filed,
(2) the petition fee,
(3) a statement that the entire delay in filing the required reply from the due date for the reply until the filing of a grantable petition pursuant to 37 CFR 1.137(b) was unintentional, and
(4) a terminal disclaimer and fee if the application was filed on or before June 8, 1995 or if the application is a design application.

The reply to the March 3, 2008 Office action has been submitted in the form of the reply filed November 3, 2008. Petitioner has submitted the required petition fee of $810. Petitioner has stated the entire delay in filing the required reply from the due date for the reply until the filing of a grantable petition pursuant to 37 CFR 1.137(b) was unintentional.

Petitioner has met the requirements to revive the above-identified application pursuant to 37 CFR 1.137(b). Therefore, the petition is granted and the application is revived.

Petitioner submitted $1,115 for a five-month extension of time on May 23, 2008. However, only a three-month extension was obtained because of the maximum six-month statutory period for reply. Therefore, the Office has scheduled a refund of $590 which is the difference between the amount paid of $1,115 and the fee required for a three-month extension of time as of May 23, 2008 ($525).

Technology Center Art Unit 2193 will be informed of the instant decision and the amendment filed November 3, 2008, will be examined in due course.

Telephone inquiries regarding this communication should be directed to Petitions Attorney Steven Brantley at (571) 272-3203.

Charles Steven Brantley
Senior Petitions Attorney
Office of Petitions

SPE RESPONSE FOR CERTIFICATE OF CORRECTION

Paper No.:20090812

DATE : January 21, 2009

TO SPE OF : ART UNIT 2628

SUBJECT : Request for Certificate of Correction on Patent No.: 7304647

A response is requested with respect to the accompanying request for a certificate of correction.

Please complete this form and return with file, within **7** days to:
Certificates of Correction Branch - ST (South Tower) 9A22
Palm location **7590** - Tel. No. (703) 305-8309

With respect to the change(s) requested, correcting Office and/or Applicant's errors, should the patent read as shown in the certificate of correction? No new matter should be introduced, nor should the scope or meaning of the claims be changed.

Thank You For Your Assistance **Certificates of Correction Branch**

The request for issuing the above-identified correction(s) is hereby:

Note your decision on the appropriated box.

☒ **Approved** All changes apply.

☐ **Approved in Part** Specify below which changes **do not** apply.

☐ **Denied** State the reasons for denial below.

Comments:

/KEE M TUNG/
Supervisory Patent Examiner.Art Unit 2628

10/810 640

SPE RESPONSE FOR CERTIFICATE OF CORRECTION

Paper No.: _____

DATE : October 5, 2005

TO SPE OF : ART UNIT 2857

SUBJECT : Request for Certificate of Correction on Patent No.: 6,907,381

A response is requested with respect to the accompanying request for a certificate of correction.

Please complete this form and return with file, within **7** days to:
Palm location **7580, Certificates of Correction Branch – South Tower – 9A22**
If response is for an IFW, **return to employee (named below) via PUBSCofC Team in MADRAS.**
With respect to the change(s) requested, correcting Office and/or Applicant's errors, should the patent read as shown in the certificate of correction (COCIN)? No new matter should be introduced, nor should the scope or meaning of the claims be changed.

Magdalene Talley

Thank You For Your Assistance

Certificates of Correction Branch
Tel. No. 703-308-9309 ext. 116

The request for issuing the above-identified correction(s) is hereby:
Note your decision on the appropriate box.

- ☒ **Approved** — **All** changes apply.
- ☐ **Approved in Part** — Specify below which changes **do not** apply.
- ☐ **Denied** — State the reasons for denial below.

Comments:

This patent is not subject to a terminal disclaimer as indicated on the face of the patent.

MARC S. HOFF
SUPERVISORY PATENT EXAMINER
TECHNOLOGY CENTER 2800

SPE

2857
Art Unit

OIPE JC174
JUL 06 2005
PATENT & TRADEMARK OFFICE

IN THE UNITED STATES PATENT AND TRADEMARK OFFICE

Application No.	: 10/810,640	Confirmation No.:	9592
First Named Inventor	: Yoshiharu HAYASHI		
Filed	: March 29, 2004		
TC/A.U.	: 2857		
Examiner	: Elias Desta		
Docket No.	: 056207.50393C3		
Customer No.	: 23911		
Patent No.	: 6,907,381 B2		
Issued	: June 14, 2005		
Title	: System for Aiding the Preperation of Operation and Maintenance Plans for a Power-Generation Installation		

REQUEST FOR CERTIFICATE OF CORRECTION
UNDER 37 C.F.R. § 1.322(a)

Commissioner for Patents
P.O. Box 1450
Alexandria, VA 22313-1450

Certificate
JUL 11 2005
of Correction

ATTN: Certificate of Correction Branch

Sir:

It is respectfully requested that the attached Certificate of Correction be entered in the patent identified above. It will be noted that this patent is not subject to a terminal disclaimer as indicated on the face of the patent.

Since the above is a U.S. Patent and Trademark Office error, it is believed there should be no charge for this Petition. However, in the event that costs are incurred, please charge undersigned counsel's Deposit Account 05-1323, Docket No. 056207.50393C3.

Respectfully submitted,

July 6, 2005

Jeffrey D. Sanok
Registration No. 32,169

CROWELL & MORING LLP
Intellectual Property Group
P.O. Box 14300
Washington, DC 20044-4300
Telephone No.: (202) 624-2500
Facsimile No.: (202) 628-8844
JDS:kms
384403v1

JUL 11 2005

PTO/SB/44 (04-05)
Approved for use through 04/30/2007. OMB 0651-0033
U.S. Patent and Trademark Office; U.S. DEPARTMENT OF COMMERCE
Under the Paperwork Reduction Act of 1995, no persons are required to respond to a collection of information unless it displays a valid OMB control number.
(Also Form PTO-1050)

UNITED STATES PATENT AND TRADEMARK OFFICE
CERTIFICATE OF CORRECTION

PATENT NO. : 6,907,381 B2

APPLICATION NO.: 10/810,640

ISSUE DATE : June 14, 2005

INVENTOR(S) : Yoshiharu HAYASHI et al

It is certified that an error appears or errors appear in the above-identified patent and that said Letters Patent is hereby corrected as shown below:

Please correct the (*) Notice on the front page of the Letters Patent to reflect that this patent is not subject to a terminal disclaimer

MAILING ADDRESS OF SENDER (Please do not use customer number below):

Crowell & Moring LLP (JDS)
P.O. Box 14300
Washington, DC 20044-4300

This collection of information is required by 37 CFR 1.322, 1.323, and 1.324. The information is required to obtain or retain a benefit by the public which is to file (and by the USPTO to process) an application. Confidentiality is governed by 35 U.S.C. 122 and 37 CFR 1.14. This collection is estimated to take 1.0 hour to complete, including gathering, preparing, and submitting the completed application form to the USPTO. Time will vary depending upon the individual case. Any comments on the amount of time you require to complete this form and/or suggestions for reducing this burden, should be sent to the Chief Information Officer, U.S. Patent and Trademark Office, U.S. Department of Commerce, P.O. Box 1450, Alexandria, VA 22313-1450. DO NOT SEND FEES OR COMPLETED FORMS TO THIS ADDRESS. SEND TO: **Attention Certificate of Corrections Branch, Commissioner for Patents, P.O. Box 1450, Alexandria, VA 22313-1450.**

If you need assistance in completing the form, call 1-800-PTO-9199 and select option 2.

JUL 11 2005

UNITED STATES PATENT AND TRADEMARK OFFICE

Commissioner for Patents
United States Patent and Trademark Office
P.O. Box 1450
Alexandria, VA 22313-1450
www.uspto.gov

caf

Mailed: 7-20-07

In re application of :
TANAGLIA : DECISION ON
Serial No. 10/810,695 : PETITION
Filed: March 29, 2004 :
For: ELASTOMERIC COMPOSITION FOR THE INSULATION OF ELECTRIC CABLES

This is a decision on the PETITION UNDER 37 CFR 1.181 for entry of the amendment filed February 16, 2007.

On April 19, 2007, an office action was mailed containing a restriction requirement and an election by original presentation. The examiner stated that claims 1-19 were directed to an invention that is independent or distinct from the invention originally claimed. The examiner withdrew claims 1-19 as being directed to a non-elected invention.

On May 10, 2007 the instant petition under 37 CFR 1.181 was timely filed to formally request that the examiner enter the amendment filed February 16, 2007. This petition will be treated as a petition to withdraw the restriction requirement held by the examiner in the April 19, 2007 office action.

DECISION

In the present application, the examiner stated that amended claims 1-19 filed February 16, 2007 are directed to an invention that is independent or distinct from the invention originally claimed. The examiner grouped the amended claims into two groups and alleged that each of the two groups and the already examined claims are related as mutually exclusive species in an intermediate-final product relationship. Claims 1-19, all pending claims, were then withdrawn from consideration as being directed to non-elected inventions.

Petitioner argues that the amended claims fall within the originally elected invention. An analysis of the claims indicates that the originally filed claims are directed to an "elastomeric blend...comprising one or more polymers". Note that the open claim language indicates that other ingredients may be present. The specification at page 5, lines 12 ff clearly indicates that the elastomeric blend also comprises the ingredients (mineral filler etc.) recited in the amended claims presented February 16, 2007. Thus, the addition of these ingredients to e.g. claim 1 does not create an invention that is independent or distinct from the invention originally claimed.

Petitioner is correct. The examiner has the burden of showing that the inventions are in fact distinct but in the instant case, such a showing has not been made.

Additionally, the examiner has not established that any serious burden exists to examine all of the claims as required by MPEP Section 803.

Accordingly, the restriction requirement as set forth in the office action of April 19, 2007 is improper and should be withdrawn. The instant petition is **GRANTED.** The examiner is directed to withdraw the requirement and prepare a new office action.

Jacqueline M. Stone

Jacqueline M. Stone, Director
Technology Center 1700
Chemical and Materials Engineering

OBLON, SPIVAK, MCCLELLAND, MAIER & NEUSTADT, P.C.
1940 DUKE STREET
ALEXANDRIA VA 22314

UNITED STATES PATENT AND TRADEMARK OFFICE

Commissioner for Patents
United States Patent and Trademark Office
P.O. Box 1450
Alexandria, VA 22313-1450
www.uspto.gov

COPY MAILED

FEB 17 2006

OFFICE OF PETITIONS

WESTERMAN, HATTORI, DANIELS & ADRIAN
1250 CONNECTICUT AVENUE, NW
SUITE 700
WASHINGTON DC 20036

In re Application of	:	
Hiroya Abe et al	:	
Application No. 10/810,726	:	ON PETITION
Filed: March 29, 2004	:	
Attorney Docket No. 042264	:	

This is a decision on the petition, filed February 16, 2006, under 37 CFR 1.313(c)(2) to withdraw the above-identified application from issue after payment of the issue fee.

The petition is **GRANTED**.

The above-identified application is withdrawn from issue for consideration of a submission under 37 CFR 1.114 (request for continued examination). See 37 CFR 1.313(c)(2).

Petitioner is advised that the issue fee paid on December 7, 2005, in the above-identified application cannot be refunded. If, however, the above-identified application is again allowed, petitioner may request that it be applied towards the issue fee required by the new Notice of Allowance.[1]

Telephone inquiries should be directed to the undersigned at (571) 272-3208.

The examiner of Technology Center AU 3681 will consider the request for continued examination under 37 CFR 1.114.

Karen Creasy

Karen Creasy
Petitions Examiner
Office of Petitions
Office of the Deputy Commissioner
for Patent Examination Policy

---

[1] The request to apply the issue fee to the new Notice may be satisfied by completing and returning the new Issue Fee Transmittal Form PTOL-85(b), which includes the following language thereon: "Commissioner for Patents is requested to apply the Issue Fee and Publication Fee (if any) or re-apply any previously paid issue fee to the application identified above." Petitioner is advised that, whether a fee is indicated as being due or not, the Issue Fee Transmittal Form **must** be completed and timely submitted to avoid abandonment. Note the language in bold text on the first page of the Notice of Allowance and Fee(s) Due (PTOL-85).

UNITED STATES PATENT AND TRADEMARK OFFICE

COMMISSIONER FOR PATENTS
UNITED STATES PATENT AND TRADEMARK OFFICE
P.O. BOX 1450
ALEXANDRIA, VA 22313-1450
www.uspto.gov

Paper No. _____

Date : February 17, 2006

TO : Director, Office of Patent Publication

FROM : Office of the Deputy Commissioner
for Patent Examination Policy

SUBJECT : Withdrawal from Issue of

Applicant(s) :Hiroya Abe et al
Application No. :10/810,726
Filed :March 29, 2004

The above-identified application has been assigned Patent No. 7,001,309 and an issue date of February 21, 2006.

It is hereby directed that this application be withdrawn from issue at the request of the applicant.

Do not refund the issue fee.

The following erratum should be published in the Official Gazette if the above-identified application is published in the OG of February 21, 2006:

"All reference to Patent No. 7,001,309 to Hiroya Abe et al of Japan for HYDRAULIC TRANSMISSION APPARATUS WITH LUCKUP CLUTCH appearing in the Official Gazette of February 21, 2006 should be deleted since no patent was granted."

Karen Creasy

Karen Creasy
Petitions Examiner
Office of Petitions
Office of the Deputy Commissioner
for Patent Examination Policy

cc: Paul Harrison, MDW-4B03,(FAX-273-5468)
Deneise Boyd, MDE-3D39 (FAX-273-5124)
Mary Louise McAskill, ST-8C15 (FAX 305-4372)
Niomi Farmer, ST-8C14 (FAX-305-4372)
Mary E. Johnson (Cookie), MDE-7C71 (FAX 273-0038
Duane Davis P/OPC MDE-7D89
Tamara Greene, ST-8C13

UNITED STATES PATENT AND TRADEMARK OFFICE

Commissioner for Patents
United States Patent and Trademark Office
P.O. Box 1450
Alexandria, VA 22313-1450
www.uspto.gov

SEP - 3 2004

In re Application of Robert Roberts Serial Number: 10/810,763 Filed: March 26, 2004 For: METHOD OF PROCESSING COLLOIDAL SIZE POLYTETRAFLUOROETHYLENE RESIN PARTICLES TO PRODUCE BIAXIALLY-ORIENTED STRUCTURES	PETITION UNDER M.P.E.P.708.02 IV

This is in response to the petition filed March 26, 2004, requesting that the above-identified application be granted Special Status under Section 708.02 IV of the MPEP and 37 CFR 1.102(c) (**no fee required**).

The request for Special Status considered under Section 708.02 IV is granted because criteria under 37 CFR 1.102(c) has been met.

Accordingly the petition is **GRANTED.**

Marian C Knode

Marian C. Knode, Special Programs Examiner
Technology Center 1700
Chemical and Materials Engineering

EDWARD M. LIVINGSTON, PA
963 TRAIL TERRACE DRIVE
NAPLES FL 34103

UNITED STATES PATENT AND TRADEMARK OFFICE

Commissioner for Patents
United States Patent and Trademark Office
P.O. Box 1450
Alexandria, VA 22313-1450
www.uspto.gov

SEP - 3 2004

In re Application of Robert Roberts Serial Number: 10/810,763 Filed: March 26, 2004 For: METHOD OF PROCESSING COLLOIDAL SIZE POLYTETRAFLUOROETHYLENE RESIN PARTICLES TO PRODUCE BIAXIALLY-ORIENTED STRUCTURES	:	PETITION UNDER M.P.E.P.708.02 IV

This is in response to the petition filed March 26, 2004, requesting that the above-identified application be granted Special Status under Section 708.02 IV of the MPEP and 37 CFR 1.102(c) **(no fee required)**.

The request for Special Status considered under Section 708.02 IV is granted because criteria under 37 CFR 1.102(c) has been met.

Accordingly the petition is **GRANTED.**

Marian C. Knode

Marian C. Knode, Special Programs Examiner
Technology Center 1700
Chemical and Materials Engineering

EDWARD M. LIVINGSTON, PA
963 TRAIL TERRACE DRIVE
NAPLES FL 34103

UNITED STATES PATENT AND TRADEMARK OFFICE

COMMISSIONER FOR PATENTS
UNITED STATES PATENT AND TRADEMARK OFFICE
P.O. BOX 1450
ALEXANDRIA, VA 22313-1450
www.uspto.gov

Thomas L. Irving
FINNEGAN, HENDERSON, FARABOW,
GARRETT & DUNNER, L.L.P.
1300 I Street, N.W.
Washington DC 20005-3315

COPY MAILED

NOV 0 2 2005

OFFICE OF PETITIONS

Applicant: Ramos et al.
Appl. No.: 10/810,814
Filing Date: March 29, 2004
Title: PARA-PHENYLENEDIAMINE DERIVATIVES CONTAINING A DISUBSTITUTED PYRROLIDINYL GROUP BEARING A CATIONIC RADICAL, AND USE OF THE SAME FOR DYEING KERATIN FIBERS
Attorney Docket No.: 05725.1292-00
Pub. No.: US 2004/0248961 A1
Pub. Date: December 9, 2004

This is a decision on the request for corrected of patent application publication under 37 CFR 1.221(b), filed on February 9, 2005, for the above-identified application.

The request is DISMISSED.

Applicant requests that the application be republished because the patent application publication contains a material error in formula in dependent claim 18, as the subscript in formula (IV) "$(R_8)_p$" is misprinted as "$(R_3)_p$."

37 CFR 1.221 (b) is applicable "only when the Office makes a material mistake which is apparent from Office records.... Any request for a corrected publication or revised patent application publication other than provided as provided in paragraph (a) of this section must be filed within two months from the date of the patent application publication. This period is not extendable." A material mistake must affect the public's ability to appreciate the technical disclosure of the patent application publication, to determine the scope of the patent application publication, or to determine the scope of the provisional rights that an applicant may seek to enforce upon issuance of a patent. [1]

The error noted by requestor in dependent claim 18, wherein the subscript is misprinted is not a material Office error under 37 CFR 1.221. The error in this published application is due to the poor quality of the text in the application. The text of the subscript is very small and blurry. Furthermore, other text in the application is also not clear, as some of the letters, numerals and symbols are very small and incomplete. Applicant is advised that he or she may want to file

[1] Changes to Implement Eighteen-Month Publication of Patent Applications, 65 FR 57023, 57038 (Sept. 20, 2000), 1239, Off. Gaz. Pat. Office Notices 63, 75 (Oct. 10, 2000) (final rule).

application papers that are clearer, as the errors are due to the quality of the text. The text in the application, which is very small and too close together, which makes it blurry and not clear, also makes it difficult to read and to electronically reproduce by digital imaging and optical character recognition

Applicant should file applications having larger text, which is cleaner and with sufficient clarity and contrast to permit reproduction to avoid errors in the patent application publication process. See 37 CFR 1.52.

The applicant is advised that a "request for republication of an application previously published" may be filed under 37 CFR 1.221(a). Such a request for republication "must include a copy of the application compliance with the Office's electronic filing system requirements and be accompanied by the publication fee set forth in § 1.18(d) and the processing fee set forth in § 1.17(i)." If the request for republication does not comply with the electronic filing system requirements, the republication will not take place and the publication fee set forth in § 1.18(d) will be refunded. The processing fee will be retained.

Any request for republication under 37 CFR 1.221(a), must be submitted via the EFS system and questions or request for reconsideration of the decision, should be addressed as follows:

By mail to: Mail Stop PGPUB
Commissioner for Patents
P.O. Box 1450
Alexandria, Va. 22313-1450

By facsimile: 571-273-8300

Inquiries relating to this matter may be directed to Mark Polutta at (571) 272-7709 (voice).

Mark O. Polutta
Senior Legal Advisor
Office of Patent Legal Administration
Office of the Deputy Commissioner
for Patent Examination Policy

UNITED STATES PATENT AND TRADEMARK OFFICE

COMMISSIONER FOR PATENTS
UNITED STATES PATENT AND TRADEMARK OFFICE
P.O. BOX 1450
ALEXANDRIA, VA 22313-1450
www.uspto.gov

Thomas L. Irving
FINNEGAN, HENDERSON, FARABOW,
GARRETT & DUNNER, L.L.P.
1300 I Street, N.W.
Washington DC 20005-3315

COPY MAILED

JUL 19 2005

OFFICE OF PETITIONS

Applicant: Gueret
Appl. No.: 10/810,821
Filing Date: March 29, 2004
Title: COSMETIC APPLICATOR
Attorney Docket No.: 08048.0048-000
Pub. No.: US 2004/0244809 A1
Pub. Date: December 9, 2004

This is a decision on the request for a corrected patent application publication under 37 CFR 1.221(b), filed on January 7, 2005, for the above-identified application.

The request is granted.

Inquiries relating to this matter may be directed to Mark Polutta at (571) 272-7709 (voice).

Mark O. Polutta
Office of Patent Legal Administration
Office of the Deputy Commissioner
for Patent Examination Policy

UNITED STATES PATENT AND TRADEMARK OFFICE

Commissioner for Patents
United States Patent and Trademark Office
P.O. Box 1450
Alexandria, VA 22313-1450
www.uspto.gov

MCDERMOTT, WILL & EMERY
600 13TH STREET, N.W.
WASHINGTON DC 20005-3096

COPY MAILED

APR 01 2005

OFFICE OF PETITIONS

In re Application of :
Seiichi Banba :
Application No. 10/810,833 : ON PETITION
Filed: March 29, 2004 :
Attorney Docket No. 50024-024 :

This is a decision on the petition, filed March 25, 2005, under 37 CFR 1.313(c)(2) to withdraw the above-identified application from issue after payment of the issue fee.

The petition is **GRANTED**.

The above-identified application is withdrawn from issue for consideration of a submission under 37 CFR 1.114 (request for continued examination). See 37 CFR 1.313(c)(2).

Petitioner is advised that the issue fee paid on February 24, 2005 in the above-identified application cannot be refunded. If, however, the above-identified application is again allowed, petitioner may request that it be applied towards the issue fee required by the new Notice of Allowance.[1]

Telephone inquiries should be directed to the undersigned at (571) 272-3208.

The examiner of Technology Center AU 2817 will consider the request for continued examination under 37 CFR 1.114.

Karen Creasy

Karen Creasy
Petitions Examiner
Office of Petitions
Office of the Deputy Commissioner
for Patent Examination Policy

---

[1] The request to apply the issue fee to the new Notice may be satisfied by completing and returning the new Issue Fee Transmittal Form PTOL-85(b), which includes the following language thereon: "Commissioner for Patents is requested to apply the Issue Fee and Publication Fee (if any) or re-apply any previously paid issue fee to the application identified above." Petitioner is advised that, whether a fee is indicated as being due or not, the Issue Fee Transmittal Form **must** be completed and timely submitted to avoid abandonment. Note the language in bold text on the first page of the Notice of Allowance and Fee(s) Due (PTOL-85).

UNITED STATES PATENT AND TRADEMARK OFFICE

COMMISSIONER FOR PATENTS
UNITED STATES PATENT AND TRADEMARK OFFICE
P.O. BOX 1450
ALEXANDRIA, VA 22313-1450
www.uspto.gov

Paper No. _____

Date : April 1, 2005

TO : Director, Office of Patent Publication

FROM : Office of the Deputy Commissioner
for Patent Examination Policy

SUBJECT : Withdrawal from Issue of

Applicant(s) :Seiichi Banba
Application No. :10/810,833
Filed :March 29, 2004

The above-identified application has been assigned Patent No. 6,879,211 and an issue date of April 12, 2005.

It is hereby directed that this application be withdrawn from issue at the request of the applicant.

Do not refund the issue fee.

The following erratum should be published in the Official Gazette if the above-identified application is published in the OG of April 12, 2005:

"All reference to Patent No. 6,879,211 to Seiichi Banba of Japan for VARIABLE GAIN DIFFERENTIAL AMPLIFIER AND MULTIPLICATION CIRCUIT appearing in the Official Gazette of April 12, 2005 should be deleted since no patent was granted."

Karen Creasy

Karen Creasy
Petitions Examiner
Office of Petitions
Office of the Deputy Commissioner
for Patent Examination Policy

cc: Paul Harrison, MDW-4B03, (FAX-273-5468
Deneise Boyd, MDE-3D39 (FAX-273-5124)
Mary Louise McAskill, ST-8C15 (FAX 305-4372)
Niomi Farmer, ST-8C14 (FAX-305-4372)
Mary E. Johnson (Cookie), MDE-7C71 (FAX 273-0038)
Duane Davis P/OPC MDE-7D89
Tamara Greene, ST-8C13

UNITED STATES PATENT AND TRADEMARK OFFICE

Commissioner for Patents
United States Patent and Trademark Office
P.O. Box 1450
Alexandria, VA 22313-1450
www.uspto.gov

Paper No.

NIXON & VANDERHYE, PC
1100 N GLEBE ROAD
8TH FLOOR
ARLINGTON, VA 22201-4714

COPY MAILED
SEP 0 8 2004
OFFICE OF PETITIONS

In re Application of	:	
Steven M. Bessette	:	
Application No. 10/810,859	:	
Filed: March 29, 2004	:	ON PETITION
Attorney Docket Number:	:	
4380-154	:	

This is a decision on the correspondence entitled Response to Notice of Omitted Item(s) in a Nonprovisional Application, filed June 24, 2004, requesting the above-identified application be accorded a filing date of March 29, 2004, including pages 64 and 65 of the specification. The correspondence is properly treated as a petition under 37 CFR 1.53.

The petition is **granted**.

The application was filed on March 29, 2004. However, on June 7, 2004, the Office of Initial Patent Examination mailed a Notice of Omitted Item(s) in a Nonprovisional Application, noting that the application had been accorded a filing date; however, pages 64 and 65 of the specification appeared to have been omitted from the application.

In response, Petitioner files the instant petition wherein Petitioner avers that pages 64 and 65 of the specification were included among 67 pages of Specification, Claims and Abstract filed initially, on March 29, 2004, and were received by this Office as evidenced by the return-receipt postcard. In support, Petitioner provides a copy of a return receipt postcard acknowledging receipt of, *intern alia*, 67 pages of Specification, Claims and Abstract, filed on March 29, 2004.

A review of the return receipt postcard reveals that Petitioner is correct. The postcard acknowledges receipt of 67 pages of Specification, Claims, and Abstract, by this Office on March 29,

2004. Petitioner has also re-submitted pages 64 and 65 of the specification with the instant petition.

Evidence of receipt of any correspondence filed in the Patent and Trademark Office can be obtained by submitting a self-addressed postcard properly itemizing and identifying the paper or papers being filed. Upon receipt of the correspondence, the Patent and Trademark Office will check the listing on the post card against the papers submitted, making sure that all items listed are present and will then stamp the postcard with an Official date stamp and place the postcard in the outgoing mail. "A postcard receipt which itemizes and properly identifies the papers which are being filed serves as *prima facie* evidence of receipt in the PTO of all items listed thereon by the PTO." MPEP § 503.

Accordingly, the petition is granted The copy of pages 64 and 65 of the specification, supplied with the instant petition on June 24, 2004, will be used for examination purposes.

No petition fee is required, and none has been charged.

The application will be returned to the Office of Initial Patent Examination for further processing as a nonprovisional application with a filing date of March 29, 2004, and an indication that pages 64 and 65 of the Specification were included among 67 pages of Specification, Claims and Abstract that were present on filing on March 29, 2004.

Telephone inquiries concerning this matter should be directed to Petitions Attorney Derek L. Woods at (703) 305-0014.

Derek L. Woods
Petitions Attorney
Office of Petitions

UNITED STATES PATENT AND TRADEMARK OFFICE

COMMISSIONER FOR PATENTS
UNITED STATES PATENT AND TRADEMARK OFFICE
P.O. BOX 1450
ALEXANDRIA, VA 22313-1450
www.uspto.gov

080404

AUG 5 2004

Israel Zeitz
1656 S.E. Haverford Street
Port St. Lucie, FL 34983

In re Application of: Israel Zeitz Serial No.: 10/810,863 Filed: March 29, 2004 For: FOOTBALL MEASURING DEVICE AND METHOD	: : : : :	DECISION ON PETION TO MAKE SPECIAL

This is a decision on the petition under 37 C.F.R. § 1.102, filed June 14, 2004, to make the above-identified application special.

Petitioner requests that the above-identified application be made special under the accelerated examination procedure set forth in Manual of Patent Examining Procedure (M.P.E.P.) § 708.02, Section IV: Applicant's Age.

A grantable petition to make special under 37 C.F.R. § 1.102 and in accordance with M.P.E.P. § 708.02, Section IV, must include a showing, as by a birth certificate or the applicant's affidavit or declaration, that the applicant is sixty five (65) years of age or more. No fee is required for this petition.

The petition includes a declaration by inventor Israel Zeitz asserting that he is over sixty five (65) years of age.

Accordingly, the petition is GRANTED.

The application is being forwarded to the examiner for expedited prosecution.

If the examiner can make this application special without prejudice to any possible interfering applications, and he/she should make a rigid search for such, he/she is authorized to do so for the next action. Should the application be rejected, the application will not be considered special for the subsequent action unless the applicant promptly makes a bona fide effort to place the application in condition for allowance, even if it is necessary to have an interview with the examiner to accomplish this purpose.

If the examiner finds any interfering application for the same subject matter, he/she should consider such application simultaneously with this application and should state in the official letter of such application that he/she is taking it out of its turn because of possible interference.

Should an appeal be taken in this application or should this application becomes involved in an interference, consideration of the appeal and the interference will be expedited by all Patent and Trademark Office officials concerned, contingent likewise upon diligent prosecution by the applicant.

After allowance, this application will be given priority for printing. See M.P.E.P. § 1309.

The petition is granted to the extent indicated.

Hien H. Phan, Special Program Examiner
Technology Center 2800
Semiconductors, Electrical and Optical
Systems and Components

JUN 1 3 2001

UNITED STATES PATENT AND TRADEMARK OFFICE

NOV 1 5 2004
PATENT AND TRADEMARK OFFICE

COMMISSIONER FOR PATENTS
UNITED STATES PATENT AND TRADEMARK OFFICE
WASHINGTON, D.C. 20231
www.uspto.gov

Paper No. 8

FITCH EVEN TABIN & FLANNERY
120 SOUTH LA SALLE STREET
SUITE 1600
CHICAGO, IL 60603-3406

COPY MAILED

JUN 0 6 2001

SPECIAL PROGRAMS OFFICE
DAC FOR PATENTS

In re Application of	:
James Stephen Clark et al.	:
Application No. 09/635,978	: DECISION ACCORDING
Filed: August 9, 2000	: STATUS UNDER 37 CFR 1.47(a)
For: CENTER BEAM CAR WITH	:
INCREASED LOAD CAPACITY	:

This is in response to the renewed "Petition Under 37 CFR 1.47(a)," filed June 1, 2001.

The petition is granted.

Petitioner has shown that the non-signing inventor has refused to join in the filing of the above-identified application.

The above-identified application and papers have been reviewed and found in compliance with 37 CFR 1.47(a). This application is hereby accorded Rule 1.47(a) status. As provided in Rule 1.47(a), this Office will forward notice of this application's filing to the non-signing inventor at the address given in the Declaration. Notice of the filing of this application will also be published in the Official Gazette.

Telephone inquiries regarding this decision should be directed to Petitions Examiner Wan Laymon at (703) 306-5685.

This application is being forwarded to Initial Patent Examination Division for Preexamination Processing.

Frances Hicks
Lead Petitions Examiner
Office of Petitions
Office of the Deputy Commissioner
for Patent Examination Policy

BEST AVAILABLE COPY

UNITED STATES PATENT AND TRADEMARK OFFICE

Commissioner for Patents
United States Patent and Trademark Office
P.O. Box 1450
Alexandria, VA 22313-1450
www.uspto.gov

JJGJR.: 07-06

Paper No: __

COPY MAILED
JUL 10 2006
OFFICE OF PETITIONS

WILLIAM O'DRISCOLL
THE TRANE COMPANY
PATENT DEPARTMENT - 12-1
3600 PAMMEL CREEK ROAD
LA CROSSE WI 54601

In re Application of	:	
Hancock	:	
Application No. 10/810,877	:	DECISION
Filing Date: 26 March, 2004	:	
Attorney Docket No.: TIR 2675B	:	

This is a decision on the petition filed on 28 March, 2006, alleging unintentional delay under 37 C.F.R. §1.137(b).

For the reasons set forth below, the petition under 37 C.F.R.§1.137(b) is **GRANTED**.

BACKGROUND

The record reflects that:

- Petitioner failed to reply timely and properly to the non-final Office action mailed on 9 September, 2005, with reply due absent extension of time on or before 9 December, 2005;
- the instant application went abandoned after midnight 9 December, 2005;
- it does not appear that the Office mailed a Notice of Abandonment before the instant petition was filed;

- on 28 March, 2006, Petitioner filed the instant petition (with fee), reply in the form of an amendment, but failed to make the express statement ("...the entire delay ... from the due date of the reply to the filing of a grantable petition ... was unintentional ...") nor showing of unintentional delay (docket records)–however, **the petition is read to so state, and Petitioner hereby is placed on notice that, under his duty of candor to the Office he must notify the Office is this reading is incorrect.**[1]

STATUTES, REGULATIONS AND ANALYSIS

Congress has authorized the Commissioner to "revive an application if the delay is shown to the satisfaction of the Commissioner to have been "unavoidable." 35 U.S.C. §133 (1994).[2]

The regulations at 37 C.F.R. §1.137(a) and (b) set forth the requirements for a petitioner to revive a previously unavoidably or unintentionally, respectively, abandoned application under this congressional grant of authority. The language of 35 U.S.C. §133 and 37 C.F.R. §1.137(a) is clear, unambiguous, and without qualification: the delay in tendering the reply to the outstanding Office action, as well as filing the first petition seeking revival, must have been unavoidable for the reply now to be accepted on petition.[3]

Delays in responding properly raise the question whether delays are unavoidable.[4] Where there is a question whether the delay was unavoidable, Petitioners must meet the burden of establishing that the delay was unavoidable within the meaning of 35 U.S.C. §133 and 37 C.F.R. §1.137(a).[5] And the Petitioner must be diligent in attending to the matter.[6] Failure to do so does not

---

[1] See Changes to Patent Practice and Procedure, 62 Fed. Reg. at 53160 and 53178, 1203 Off. Gaz. Pat. Office at 88 and 103 (responses to comments 64 and 109)(applicant obligated under 37 C.F.R. §10.18 to inquire into the underlying facts and circumstances when providing the statement required by 37 C.F.R. §1.137(b) to the Patent and Trademark Office).

[2] 35 U.S.C. §133 provides:
35 U.S.C. §133 Time for prosecuting application.
Upon failure of the applicant to prosecute the application within six months after any action therein, of which notice has been given or mailed to the applicant, or within such shorter time, not less than thirty days, as fixed by the Commissioner in such action, the application shall be regarded as abandoned by the parties thereto, unless it be shown to the satisfaction of the Commissioner that such delay was unavoidable.

[3] Therefore, by example, an unavoidable delay in the payment of the Filing Fee might occur if a reply is shipped by the US Postal Service, but due to catastrophic accident, the delivery is not made.

[4] See: *Changes to Patent Practice and Procedure*; *Final Rule Notice*, 62 *Fed. Reg.* at 53158-59 (October 10, 1997), 1203 *Off. Gaz. Pat. Office* at 86-87 (October 21, 1997).

[5] See: In re Application of G, 11 USPQ2d 1378, 1380 (Comm'r Pats. 1989).

[6] See: Diligence in Filing Petitions to Revive and Petitions to Withdraw the Holding of Abandonment, 1124 Off. Gaz. Pat. Office 33 (March 19, 1991). It was and is Petitioner's burden to exercise diligence in seeking either to have the holding of abandonment withdrawn or the application revived. See 1124 Off. Gaz. Pat. Office supra.

constitute the care required under Pratt,[7] and so cannot satisfy the test for diligence and due care.

(By contrast, unintentional delays are those that do not satisfy the very strict statutory and regulatory requirements of unavoidable delay, and also, by definition, are not intentional.[8]))

As to the Allegation
of Unintentional Delay

The requirements for a grantable petition under 37 C.F.R. §1.137(b) are the petition and fee, a statement/showing of unintentional delay, a proper reply, and–where appropriate--a terminal disclaimer and fee if the application was filed before 8 June, 1995, or is a design application.

It appears that Petitioner has satisfied the requirements of the regulation.

CONCLUSION

The petition under 37 C.F.R. §1.137(b) hereby is **granted**.

The instant application is released to Technology Center 3700 for further processing in due course.

Telephone inquiries concerning this decision may be directed to the undersigned at (571) 272-3214.

John J. Gillon, Jr.
Senior Attorney
Office of Petitions

---

[7] The test of diligence in the prosecution of an application before the Commissioner is, in the context of ordinary human affairs, the test is such care as is generally used and observed by prudent and careful persons in relation to their most important business. Ex parte Pratt, 1887 Dec. Comm'r Pat. 31 (Comm'r Pat. 1887); Ex parte Henrich, 1913 Dec. Comm'r Pat. 139, 141 (Comm'r. Pat. 1913).

[8] Therefore, by example, an unintentional delay in the reply might occur if the reply and transmittal form are to be prepared for shipment by the US Postal Service, but other pressing matters distract one's attention and the mail is not timely deposited for shipment.

UNITED STATES PATENT AND TRADEMARK OFFICE

Commissioner for Patents
United States Patent and Trademark Office
P.O. Box 1450
Alexandria, VA 22313-1450
www.uspto.gov

LYNN A BUCKNER
PO BOX 609
CHICKAMAUGA GA 30707

COPY MAILED

FEB 06 2009

OFFICE OF PETITIONS

In re Application of Lynn A. Buckner Application No. 10/810,908 Filed: March 29, 2004 Title: Vacuum Excavation Suction Hose Attachment	: : : : :	ON PETITION

This is a decision on the petition under 37 CFR 1.137(b), filed December 30, 2008, to revive the above-identified application.

The petition under 37 CFR 1.137(b) is **GRANTED**.

The above-identified application became abandoned for failure to timely file a proper response to the final Office action mailed November 27, 2007. This Office action set a shortened statutory period for reply of three months. Applicant filed an Amendment on March 26, 2008, made timely by obtaining a one month extension of time. However, by Advisory Action mailed July 3, 2008, the Examiner indicated that the Amendment would not be entered because it failed to place the application in condition for allowance. No further reply having been received, the application became abandoned on March 28, 2008. The Office mailed a Notice of Abandonment on July 17, 2008.

With the instant petition, petitioner paid the petition fee, filed a reply in the form of an RCE and submission (an Amendment), and made the proper statement of unintentional delay.

The matter is being forwarded to Group Art Unit 3671 for consideration of the RCE filed December 30, 2008.

Telephone inquiries concerning this decision should be directed to the undersigned at (571)272-3207.

Cliff Congo
Petitions Attorney
Office of Petitions

UNITED STATES PATENT AND TRADEMARK OFFICE

COMMISSIONER FOR PATENTS
UNITED STATES PATENT AND TRADEMARK OFFICE
P.O. BOX 1450
ALEXANDRIA, VA 22313-1450
WWW.USPTO.GOV

Paper No. None

OPPENHEIMER WOLFF & DONNELLY, LLP
PLAZA VII, SUITE 3300
45 SOUTH SEVENTH STREET
MINNEAPOLIS MN 55402-1609

COPY MAILED
JAN 30 2007
OFFICE OF PETITIONS

In re Application of :
Julio J. Hernandez et al. :
Application No. 10/810,910 :
Filed: March 26, 2004 :
Attorney Docket No. 60021-379701 :
Title: ENHANCING INSIGHT-DRIVEN CUSTOMER INTERACTIONS WITH A WORKBENCH :

DECISION ON PETITION UNDER 37 C.F.R. §1.137(f)

This is a decision on the petition filed on August 21, 2006, pursuant to 37 C.F.R. §1.137(b), which is properly treated as a petition pursuant to 37 C.F.R. §1.137(f), to revive the above-identified application.

A grantable petition pursuant to 37 CFR 1.137(f) must be accompanied by:

(1) Notification of the filing of an application in a foreign country or under a multinational treaty that requires 18 month publication[1];
(2) The petition fee as set forth in 37 C.F.R. § 1.17(m), and;
(3) A statement that the entire delay in filing the notice from the date that the notice was due under 35 U.S.C. §122(b)(2)(B)(iii) until the date the notice was filed was unintentional. The Commissioner may require additional information where there is a question whether the delay was unintentional.

1 See PTO/SB/36 and paragraph on PTO/SB/64a for further information. Both may be downloaded at http://www.uspto.gov/web/forms/index.html.

Petitioner's representative has filed this petition under the wrong section of the C.F.R. He has submitted both the petition fee and a rescission of the previously made nonpublication request. As such, the second requirement of 37 C.F.R. §1.137(f) has been met.

Regarding the first requirement, Petitioner has failed to provide notification of the filing of an application in a foreign country or under a multinational treaty that requires 18 month publication. It is not clear on what date the application was filed in a foreign country or under a multinational treaty.

Regarding the third requirement, the proper statement of unintentional delay has not been made.

Accordingly, the petition under 37 C.F.R. §1.137(f) must be **DISMISSED.**

Any response must be submitted within **TWO MONTHS** from the mail date of this decision. Extensions of time under 37 CFR 1.136(a) are permitted. The submission should include a cover letter entitled "Renewed Petition under 37 CFR 1.137(f)."

On renewed petition, Petitioner's representative may wish to consider submitting form PTO/SB/64a, which may be downloaded at http://www.uspto.gov/web/forms/sb0064a.pdf.

The renewed petition should indicate in a prominent manner that the attorney handling this matter is Paul Shanoski, and may be submitted by mail[2], hand-delivery[3], or facsimile[4].

Petitioner's representative is reminded that if an applicant makes a nonpublication request and then rescinds the nonpublication request before or on the date a counterpart application is filed in an eighteen-month publication country, the application will be treated as if the nonpublication request were never made, and any petition fee would be refunded.

If responding by mail, Petitioner's representative is advised not to place the undersigned's name on the envelope. Only the information that appears in the footnote should be included -

---

2 Mail Stop Petition, Commissioner for Patents, United States Patent and Trademark Office, P.O. Box 1450, Alexandria, VA, 22313-1450.
3 Customer Window, Randolph Building, 401 Dulaney Street, Alexandria, VA, 22314.
4 (571) 273-8300- please note this is a central facsimile number.

adding anything else to the address will delay the delivery of the response to the undersigned.

Telephone inquiries regarding *this decision* should be directed to the undersigned at (571) 272-3225[5]. All other inquiries concerning examination procedures or status of the application should be directed to the Technology Center.

Paul Shanoski
Senior Attorney
Office of Petitions
United States Patent and Trademark Office

5 Petitioner's representative will note that all practice before the Office should be in writing, and the action of the Office will be based exclusively on the written record in the Office. See 37 C.F.R. §1.2. As such, Petitioner's representative is reminded that no telephone discussion may be controlling or considered authority for any further action(s) of Petitioner's representative.

UNITED STATES PATENT AND TRADEMARK OFFICE

COMMISSIONER FOR PATENTS
UNITED STATES PATENT AND TRADEMARK OFFICE
P.O. BOX 1450
ALEXANDRIA, VA 22313-1450
WWW.USPTO.GOV

Paper No. None

OPPENHEIMER WOLFF & DONNELLY, LLP
PLAZA VII, SUITE 3300
45 SOUTH SEVENTH STREET
MINNEAPOLIS MN 55402-1609

COPY MAILED

MAY 09 2007

OFFICE OF PETITIONS

In re Application of :
Julio J. Hernandez et al. :
Application No. 10/810,910 : DECISION ON RENEWED PETITION
Filed: March 26, 2004 : UNDER 37 C.F.R. §1.137(f)
Attorney Docket No. 60021- :
379701 :
Title: ENHANCING INSIGHT-DRIVEN :
CUSTOMER INTERACTIONS WITH A :
WORKBENCH :

This is a decision on the renewed petition filed on February 22, 2007, pursuant to 37 C.F.R. §1.137(b), which is properly treated as a petition pursuant to 37 C.F.R. §1.137(f), to revive the above-identified application.

A grantable petition pursuant to 37 CFR 1.137(f) must be accompanied by:

(1) Notification of the filing of an application in a foreign country or under a multinational treaty that requires 18 month publication[1];
(2) The petition fee as set forth in 37 C.F.R. § 1.17(m), and;
(3) A statement that the entire delay in filing the notice from the date that the notice was due under 35 U.S.C. §122(b)(2)(B)(iii) until the date the notice was filed was unintentional. The Commissioner may require additional information where there is a question

1 See PTO/SB/36 and paragraph on PTO/SB/64a for further information. Both may be downloaded at http://www.uspto.gov/web/forms/index.html.

whether the delay was unintentional.

The original petition was filed on August 21, 2006, under the wrong section of the C.F.R. - the original petition was filed under Rule §1.137(b). Petitioner neither included the proper statement of unintentional delay, nor did he provide notification of the filing of an application in a foreign country or under a multinational treaty that requires 18 month publication.

The prior decision set forth:

> On renewed petition, Petitioner's representative may wish to consider submitting form PTO/SB/64a, which may be downloaded at http://www.uspto.gov/web/forms/sb0064a.pdf.
>
> (Emphasis included).

The original petition was dismissed via the mailing of a decision on January 30, 2007.

On February 22, 2007, Petitioner filed this renewed petition. Petitioner has again misfiled this petition under the incorrect Rule. Petitioner has provided notification of the filing of an application under a multinational treaty that requires 18-month publication. However, Petitioner has again failed to provide the proper statement of unintentional delay.

Accordingly, the petition under 37 C.F.R. §1.137(f) must be **DISMISSED**.

Any response must be submitted within **TWO MONTHS** from the mail date of this decision. Extensions of time under 37 CFR 1.136(a) are permitted. The submission should include a cover letter entitled "Second Renewed Petition under **37 CFR 1.137(f)**."

The second renewed petition should indicate in a prominent manner that the attorney handling this matter is Paul Shanoski, and may be submitted by mail[2], hand-delivery[3], or facsimile[4]. If responding by mail, Petitioner is advised not to place the undersigned's name on the envelope. Only the information that appears in the footnote should be included - adding anything

---

2 Mail Stop Petition, Commissioner for Patents, United States Patent and Trademark Office, P.O. Box 1450, Alexandria, VA, 22313-1450.
3 Customer Window, Randolph Building, 401 Dulaney Street, Alexandria, VA, 22314.
4 (571) 273-8300- please note this is a central facsimile number.

else to the address will delay the delivery of the response to the undersigned.

Telephone inquiries regarding *this decision* should be directed to the undersigned at (571) 272-3225[5]. All other inquiries concerning examination procedures or status of the application should be directed to the Technology Center.

Paul Shanoski
Senior Attorney
Office of Petitions
United States Patent and Trademark Office

---

5 Petitioner will note that all practice before the Office should be in writing, and the action of the Office will be based exclusively on the written record in the Office. See 37 C.F.R. §1.2. As such, Petitioner is reminded that no telephone discussion may be controlling or considered authority for any further action(s) of Petitioner.

UNITED STATES PATENT AND TRADEMARK OFFICE

COMMISSIONER FOR PATENTS
UNITED STATES PATENT AND TRADEMARK OFFICE
P.O. BOX 1450
ALEXANDRIA, VA 22313-1450
WWW.USPTO.GOV

Paper No. None

COPY MAILED

JUL 06 2007

OFFICE OF PETITIONS

OPPENHEIMER WOLFF & DONNELLY, LLP
PLAZA VII, SUITE 3300
45 SOUTH SEVENTH STREET
MINNEAPOLIS MN 55402-1609

In re Application of Julio J. Hernandez et al. Application No. 10/810,910 Filed: March 26, 2004 Attorney Docket No. 60021-379701 Title: ENHANCING INSIGHT-DRIVEN CUSTOMER INTERACTIONS WITH A WORKBENCH	DECISION ON SECOND RENEWED PETITION PURSUANT TO 37 C.F.R. §1.137(F)

This is a decision on the second renewed petition filed on June 19, 2007, pursuant to 37 C.F.R. §1.137(f), to revive the above-identified application.

A grantable petition pursuant to 37 C.F.R. §1.137(f) must be accompanied by:

(1) Notification of the filing of an application in a foreign country or under a multinational treaty that requires 18 month publication[1];
(2) The petition fee as set forth in 37 C.F.R. § 1.17(m), and;
(3) A statement that the entire delay in filing the notice from the date that the notice was due under 35 U.S.C. §122(b)(2)(B)(iii) until the date the notice was filed

1 See PTO/SB/36 and PTO/SB/64a for further information. Both may be downloaded at http://www.uspto.gov/web/forms/index.html.

> was unintentional. The Commissioner may require additional information where there is a question whether the delay was unintentional.

An original petition was filed on August 21, 2006, and was dismissed via the mailing of a decision on January 30, 2007. A renewed petition was filed on February 22, 2007, and was dismissed via the mailing of a decision on May 9, 2007.

With this second renewed petition, Petitioner states that the present nonprovisional application is the subject of an application filed in either a foreign or an international application on March 29, 2005. However, the United States Patent and Trademark Office was unintentionally not notified of this filing within 45 days subsequent to the filing of the subject application in either an international application or a foreign country.

In view of the above, this application became abandoned pursuant to 35 U.S.C. §1.22(b)(2)(B)(iii) and 37 C.F.R. §1.213(c) for failure to timely notify the Office of the filing of either a foreign application or an application under a multilateral international agreement that requires publication of applications 18 months after filing.

On August 21, 2006, a Notice of Rescission of Nonpublication Request was filed with the present petition.

The petition under 37 C.F.R. §1.137(f) is **GRANTED**.

Petitioner has submitted the notification of either a foreign or an international filing, paid the petition fee, and has made the proper statement of unintentional delay.

The present petition has been found to be in compliance with 37 C.F.R. §1.137(f). Accordingly, the failure to timely notify the Office of a foreign or international filing within 45 days after the date of filing of such foreign or international application as provided by 35 U.S.C. §122(b)(2)(B)(iii) and 37 C.F.R. §1.213(c) is accepted as having been unintentionally delayed.

The previous Request and Certification under 35 U.S.C. §122(b)(2)(B)(i), filed with the original application papers, has been rescinded. A Notice Regarding Rescission of Nonpublication Request which sets forth the projected publication date of October 11, 2007 accompanies this decision on petition.

The Technology Center will be notified of this decision. The Technology Center's support staff will notify the Examiner of this decision, so that the present application can receive further processing in due course.

The general phone number for the Office of Petitions which should be used for status requests is (571) 272-3282. Telephone inquiries regarding *this decision* should be directed to the undersigned at (571) 272-3225.

Paul Shanoski
Senior Attorney
Office of Petitions
United States Patent and Trademark Office

Encl. Communication Regarding Rescission of Nonpublication Request and/or Notice of Foreign Filing

UNITED STATES PATENT AND TRADEMARK OFFICE

UNITED STATES DEPARTMENT OF COMMERCE
United States Patent and Trademark Office
Address: COMMISSIONER FOR PATENTS
P.O. Box 1450
Alexandria, Virginia 22313-1450
www.uspto.gov

APPLICATION NUMBER	FILING/RECEIPT DATE	FIRST NAMED APPLICANT	ATTY. DOCKET NO.
10/810,910	03/26/2004	Julio J. Hernandez	60021-379701

CONFIRMATION NO. 9393

29838
OPPENHEIMER WOLFF & DONNELLY, LLP
PLAZA VII, SUITE 3300
45 SOUTH SEVENTH STREET
MINNEAPOLIS, MN 55402-1609

Date Mailed: 07/02/2007

Communication Regarding Rescission Of Nonpublication Request and/or Notice of Foreign Filing

Applicant's rescission of the previously-filed nonpublication request and/or notice of foreign filing is acknowledged. The paper has been reflected in the Patent and Trademark Office's (USPTO's) computer records so that the earliest possible projected publication date can be assigned.

The projected publication date is 10/11/2007.

If applicant rescinded the nonpublication request before or on the date of "foreign filing,"[1] then no notice of foreign filing is required.

If applicant foreign filed the application after filing the above application and before filing the rescission, and the rescission did not also include a notice of foreign filing, then a notice of foreign filing (not merely a rescission) is required to be filed within 45 days of the date of foreign filing. See 35 U.S.C. § 122(b)(2)(B)(iii), and Clarification of the United States Patent and Trademark Office's Interpretation of the Provisions of 35 U.S.C. § 122(b)(2)(B)(ii)-(iv), 1272 Off. Gaz. Pat. Office 22 (July 1, 2003).

If a notice of foreign filing is required and is not filed within 45 days of the date of foreign filing, then the application becomes abandoned pursuant to 35 U.S.C. § 122(b)(2)(B)(iii). In this situation, applicant should either file a petition to revive or notify the Office that the application is abandoned. See 37 CFR 1.137(f). Any such petition to revive will be forwarded to the Office of Petitions for a decision. Note that the filing of the petition will not operate to stay any period of reply that may be running against the application.

Questions regarding petitions to revive should be directed to the Office of Petitions at (571) 272-3282. Questions regarding publications of patent applications should be directed to the patent application publication hotline at (703) 605-4283 or by e-mail pgpub@uspto.gov.

[1] Note, for purpose of this notice, that "foreign filing" means "filing an application directed to the same invention in another country, or under a multilateral international agreement, that requires publication of applications 18 months after filing".

UNITED STATES PATENT AND TRADEMARK OFFICE

UNITED STATES DEPARTMENT OF COMMERCE
United States Patent and Trademark Office
Address: COMMISSIONER FOR PATENTS
P.O. Box 1450
Alexandria, Virginia 22313-1450
www.uspto.gov

APPLICATION NUMBER	FILING/RECEIPT DATE	FIRST NAMED APPLICANT	ATTY. DOCKET NO.
10/810,910	03/26/2004	Julio J. Hernandez	60021-379701

CONFIRMATION NO. 9393

29838
OPPENHEIMER WOLFF & DONNELLY, LLP
PLAZA VII, SUITE 3300
45 SOUTH SEVENTH STREET
MINNEAPOLIS, MN 55402-1609

Date Mailed: 07/02/2007

Communication Regarding Rescission Of Nonpublication Request and/or Notice of Foreign Filing

Applicant's rescission of the previously-filed nonpublication request and/or notice of foreign filing is acknowledged. The paper has been reflected in the Patent and Trademark Office's (USPTO's) computer records so that the earliest possible projected publication date can be assigned.

The projected publication date is 10/11/2007.

If applicant rescinded the nonpublication request before or on the date of "foreign filing,"[1] then no notice of foreign filing is required.

If applicant foreign filed the application after filing the above application and before filing the rescission, and the rescission did not also include a notice of foreign filing, then a notice of foreign filing (not merely a rescission) is required to be filed within 45 days of the date of foreign filing. See 35 U.S.C. § 122(b)(2)(B)(iii), and Clarification of the United States Patent and Trademark Office's Interpretation of the Provisions of 35 U.S.C. § 122(b)(2)(B)(ii)-(iv), 1272 Off. Gaz. Pat. Office 22 (July 1, 2003).

If a notice of foreign filing is required and is not filed within 45 days of the date of foreign filing, then the application becomes abandoned pursuant to 35 U.S.C. § 122(b)(2)(B)(iii). In this situation, applicant should either file a petition to revive or notify the Office that the application is abandoned. See 37 CFR 1.137(f). Any such petition to revive will be forwarded to the Office of Petitions for a decision. Note that the filing of the petition will not operate to stay any period of reply that may be running against the application.

Questions regarding petitions to revive should be directed to the Office of Petitions at (571) 272-3282. Questions regarding publications of patent applications should be directed to the patent application publication hotline at (703) 605-4283 or by e-mail pgpub@uspto.gov.

[1] Note, for purpose of this notice, that "foreign filing" means "filing an application directed to the same invention in another country, or under a multilateral international agreement, that requires publication of applications 18 months after filing".

UNITED STATES PATENT AND TRADEMARK OFFICE

Commissioner for Patents
United States Patent and Trademark Office
P.O. Box 1450
Alexandria, VA 22313-1450
www.uspto.gov

MARSHALL, GERSTEIN & BORUN LLP (MICROSOFT)
233 SOUTH WACKER DRIVE
6300 SEARS TOWER
CHICAGO, IL 60606

MAILED

SEP 11 2009

OFFICE OF PETITIONS

In re Application of	:	
Todd R. Manion, et al.	:	
Application No. 10/810,917	:	DECISION ON PETITION
Filed: March 26, 2004	:	
Attorney Docket No. 30835/306066	:	

This is a decision on the petition, filed July 20, 2009, which is being treated as a petition under 37 CFR 1.181 (no fee) requesting withdrawal of the holding of abandonment in the above-identified application.

The petition is **DISMISSED**.

Any request for reconsideration of this decision should be filed within two (2) months from the mail date of this decision. *Note* 37 CFR 1.181(f). The request for reconsideration should include a cover letter and be entitled as a "Renewed Petition under 37 CFR 1.181 to Withdraw the Holding of Abandonment."

This application was held abandoned for failure to reply to the non-final Office action mailed August 11, 2008, which set a three (3) month shortened statutory period for reply. A Notice of Abandonment was mailed on July 24, 2009.

Petitioner asserts that the Office action dated August 20, 2008 was not received.

A review of the written record indicates no irregularity in the mailing of the Office action, and, in the absence of any irregularity, there is a strong presumption that the Office action was properly mailed to the practitioner at the address of record. This presumption may be overcome by a showing that the Office action was not in fact received. In this regard, the showing required to establish the failure to receive the Office action must consist of the following:

1. a statement from practitioner stating that the Office action was not received by the practitioner;

2. a statement from the practitioner attesting to the fact that a search of the file jacket and docket records indicates that the Office action was not received; and

3. a copy of the docket record where the non-received Office action would have been entered had it been received must be attached to and referenced in the practitioner's statement.

See MPEP § 711.03(c) under subheading "Petition to Withdraw Holding of Abandonment Based on Failure to Receive Office Action," and "Withdrawing the Holding of Abandonment When Office Actions Are Not Received," 1156 Official Gazette 53 (November 16, 1993).

The petition fails to satisfy item (3) above. None of the evidence was attached to the petition.

Accordingly, absent the required evidence to establish non-receipt of the Office action of August 11, 2008, the petition requesting withdrawal of the holding of abandonment cannot be granted at this time.

If petitioner cannot supply the evidence necessary to withdraw the holding of abandonment, or simply does not wish to, petitioner should consider filing a petition under 37 CFR 1.137(b) stating that the delay was unintentional. Public Law 97-247, § 3, 96 Stat. 317 (1982), which revised patent and trademark fees, amended 35 U.S.C. § 41(a)(7) to provide for the revival of an "unintentionally" abandoned application without a showing that the delay in prosecution or in late payment of the issue fee was "unavoidable." This amendment to 35 U.S.C. § 41(a)(7) has been implemented in 37 CFR 1.137(b). An "unintentional" petition under 37 CFR 1.137(b) must be accompanied by the $1620 petition fee.

The filing of a petition under 37 CFR 1.137(b) cannot be intentionally delayed and therefore must be filed promptly. A person seeking revival due to unintentional delay cannot make a statement that the delay was unintentional unless the entire delay, including the date it was discovered that the application was abandoned until the filing of the petition to revive under 37 CFR 1.137(b), was unintentional. A statement that the delay was unintentional is not appropriate if petitioner intentionally delayed the filing of a petition for revival under 37 CFR 1.137(b).

Further correspondence with respect to this matter should be addressed as follows:

By Mail: Mail Stop PETITION
Commissioner for Patents
P. O. Box 1450
Alexandria, VA 22313-1450

By hand: U. S. Patent and Trademark Office
Customer Service Window, Mail Stop Petitions
Randolph Building
401 Dulany Street
Alexandria, VA 22314

By facsimile: **(571) 273-8300**
Attn: Office of Petitions

Telephone inquiries concerning this decision should be directed to April M. Wise at (571) 272-1642. All other inquiries concerning the examination or status of this application should be directed to the Technology Center.

/dab/
David Bucci
Petitions Examiner
Office of Petitions

UNITED STATES PATENT AND TRADEMARK OFFICE

Commissioner for Patents
United States Patent and Trademark Office
P.O. Box 1450
Alexandria, VA 22313-1450
www.uspto.gov

MARSHALL, GERSTEIN & BORUN LLP (MICROSOFT)
233 SOUTH WACKER DRIVE
6300 SEARS TOWER
CHICAGO, IL 60606

COPY MAILED
JAN 20 2010

In re Application of	:	
Todd R. Manion, et al.	:	
Application No. 10/810,917	:	DECISION ON PETITION
Filed: March 26, 2004	:	
Attorney Docket No. 30835-306066	:	

This is a decision on the renewed petition, filed November 2, 2009, which is being treated as a petition under 37 CFR 1.181 (no fee) requesting withdrawal of the holding of abandonment in the above-identified application.

The petition is **GRANTED**.

This application was held abandoned for failure to reply to the non-final Office action mailed August 11, 2008, which set a three (3) month shortened statutory period for reply. A Notice of Abandonment was mailed on July 24, 2009.

Petitioner asserts that the Office action dated August 11, 2009 was not received.

A review of the written record indicates no irregularity in the mailing of the Office action and, in the absence of any irregularity, there is a strong presumption that the Office action was properly mailed to the practitioner at the address of record. This presumption may be overcome by a showing that the Office action was not in fact received. In this regard, the showing required to establish the failure to receive the Office action must consist of the following:

1. a statement from practitioner stating that the Office action was not received by the practitioner;

2. a statement from the practitioner attesting to the fact that a search of the file jacket and docket records indicates that the Office action was not received; and

3. a copy of the docket record where the nonreceived Office action would have been entered had it been received and docketed must be attached to and referenced in the practitioner's statement.

See MPEP § 711.03(c) under subheading "Petition to Withdraw Holding of Abandonment Based on Failure to Receive Office Action," and "Withdrawing the Holding of Abandonment When Office Actions Are Not Received," 1156 Official Gazette 53 (November 16, 1993).

The petition satisfies the above-stated requirements. Accordingly, the application was not abandoned in fact.

In view of the above, the Notice of Abandonment is hereby **vacated** and the holding of abandonment **withdrawn**.

The application file does not indicate a change of address has been filed in this case, although the address given on the petition differs from the address of record. A change of address should be filed in this case in accordance with MPEP 601.03. A courtesy copy of this decision is being mailed to the address noted on the petition. However, until otherwise instructed, all future correspondence regarding this application will be mailed solely to the address of record.

Telephone inquiries concerning this decision should be directed to April M. Wise at 571-272-1642. All other inquiries concerning the examination or status of this application should be directed to the Technology Center.

This application is being referred to the Technology Center technical support staff of Art Unit 2444 for re-mailing the Office action of August 11, 2008. The period for reply will run from the mailing date of the Office action.

/dab/
David Bucci
Petitions Examiner
Office of Petitions

cc: LILIAN Y. FICHT
MICROSOFT CORPORATION
ONE MICROSOFT WAY
REDMOND, WA 98052-6399

UNITED STATES PATENT AND TRADEMARK OFFICE

Commissioner for Patents
United States Patent and Trademark Office
P.O. Box 1450
Alexandria, VA 22313-1450
www.uspto.gov

DENTON L ANDERSON
SHELDON MAK ROSE & ANDERSON
225 SOUTH LAKE AVENUE
9TH FLOOR
PASADENA CA 91101

COPY MAILED

JUL 13 2007

OFFICE OF PETITIONS

In re Application of	:	
Morse, et al.	:	DECISION GRANTING PETITION
Application No. 10/810,928	:	UNDER 37 CFR 1.183
Filed: March 25, 2004	:	
Attorney Docket No. 17001-7	:	

This is in response to the "PETITION TO THE DIRECTOR OF THE UNITED PATENT AND TRADEMARK OFFICE FOR SUSPENSION OF THE RULES UNDER 37 C.F.R. SECTION 1.183 AND FOR APPOINTMENT OF A SECOND ATTORNEY OF RECORD UNDER MPEP SECTION 402.10", filed April 9, 2007, and supplemented on April 11, 2007.

The petition under 37 CFR 1.183 is **GRANTED**.

Petitioners have filed the instant petition to have assignees Dwain E. Morse and Gerald M. Friedman appoint their own attorneys of record in the instant application.

MPEP 402.10 provides for the appointment of more than one attorney prosecuting the application at the same time, provided a petition under 37 CFR 1.183 is filed, and the fee under 37 CFR 1.17(f) is paid.

In view of the above, the petition is granted. The law firm of Kelley Lowry & Kelley is recognized as being the attorneys of record for assignee Dwain E. Morse, and the law firm of Sheldon Mak Rose & Anderson is recognized as being the attorneys of record for assignee Gerald M. Friedman.

Petitioners are reminded, that as set forth in MPEP 402.10, all future correspondence must be signed by an attorney of record from both parties (Morse & Friedman).

The matter is being forwarded to Group Art Unit 1723 for consideration of the Amendment filed April 11, 2007.

Telephone inquiries related to this decision may be directed to the undersigned at (571)272-3207.

Cliff Congo
Petitions Attorney
Office of Petitions

UNITED STATES PATENT AND TRADEMARK OFFICE

Commissioner for Patents
United States Patent and Trademark Office
P.O. Box 1450
Alexandria, VA 22313-1450
www.uspto.gov

FASTH LAW OFFICES
629 E. BOCA RATON ROAD
PHOENIX, AZ 85022

COPY MAILED

APR 19 2005

OFFICE OF PETITIONS

In re Application of	:	
Orava et al.	:	
Application No. 10/810,934	:	ON PETITION
Filed: March 26, 2004	:	
Attorney Docket No. 137.1022CIP	:	

This is a decision on the petition under 37 C.F.R. § 1.137(b), filed March 21, 2005, to revive the above-identified application.

The petition is **GRANTED.**

The above-identified application became abandoned for failure to reply in a timely manner to the Notice to File Corrected Application Papers (Notice) mailed June 8, 2004. The Notice set a period for reply of two (2) months from the mail date of the Notice. No extensions of time under the provisions of 37 CFR 1.136(a) were obtained. Accordingly, the above-identified application became abandoned on August 9, 2004. A Notice of Abandonment was mailed on March 14, 2005.

Petitioner has met the requirements to revive the above-identified application pursuant to 37 CFR 1.137(b).

This matter is being referred to the Office of Initial Patent Examination for further processing.

Telephone inquiries regarding this decision should be directed to the undersigned at (571) 272-3282.

Liana Chase
Petitions Examiner
Office of Petitions
Office of the Deputy Commissioner
for Patent Examination Policy

United States
Patent And
Trademark Office

P.O. Box 1450, Alexandria, Virginia 22313-1450 – www.uspto.gov

PETITION DECISION

06/18/04

Laura A. Sheridan
Fish & Neave
1251 Avenue of the Americas
New York, NY 10020-1105

Dear Applicant:

The Box PG Pub replacement drawings for application number 10/810937 received on 05/25/04 by the U. S. Patent and Trademark Office will be included for patent publication.

Telephone inquiries should be directed to Kaletus King, Office of Pre-Grant Publication 703 605-4283.

Kaletus King

Signature of Reviewer, Office of Pre-Grant Publication

UNITED STATES PATENT AND TRADEMARK OFFICE

Commissioner for Patents
United States Patent and Trademark Office
P.O. Box 1450
Alexandria, VA 22313-1450
www.uspto.gov

THE PROCTER & GAMBLE COMPANY
GLOBAL LEGAL DEPARTMENT - IP
SYCAMORE BUILDING - 4TH FLOOR
299 EAST SIXTH STREET
CINCINNATI, OH 45202

COPY MAILED

JUN 17 2009

OFFICE OF PETITIONS

In re Application of
Alisa Ann Ivory, et al.
Application No. 10/810,940
Filed: March 26, 2004
Attorney Docket No. 9191ML

ON PETITION

This is a decision in response to the petition, filed April 1, 2009, to revive the above-identified application under the provisions of 37 CFR 1.137(b).

The petition is **GRANTED**.

The application became abandoned for failure to reply in a timely manner to the non-final Office action mailed February 8, 2008, which set a shortened statutory period for reply of three (3) months. No extension of time under the provisions of 37 CFR 1.136(a) was obtained. Accordingly, the application became abandoned on May 9, 2008. A Notice of Abandonment was mailed on September 12, 2008. On April 1, 2009, the present petition was filed.

The petition satisfies the requirements of 37 CFR 1.137(b) in that petitioner has supplied (1) the reply in the form of an amendment; (2) the petition fee of $1,620; and (3) an adequate statement of unintentional delay.

This application is being referred to Technology Center AU 1651 for appropriate action by the Examiner in the normal course of business on the reply received April 1, 2009.

Telephone inquiries concerning this decision should be directed to the undersigned at (571) 272-3204. Inquiries relating to further prosecution should be directed to the Technology Center.

Sherry D. Brinkley
Petitions Examiner
Office of Petitions

Copied from 10870940 on 07/22/2009

UNITED STATES PATENT AND TRADEMARK OFFICE

UNITED STATES DEPARTMENT OF COMMERCE
United States Patent and Trademark Office
Address: COMMISSIONER FOR PATENTS
P.O. Box 1450
Alexandria, Virginia 22313-1450
www.uspto.gov

APPL NO.	FILING OR 371 (c) DATE	ART UNIT	FIL FEE REC'D	ATTY.DOCKET NO	DRAWINGS	TOT CLMS	IND CLMS
10/810,945	03/26/2004	2643	1320	36613	2	11	1

CONFIRMATION NO. 9892

CORRECTED FILING RECEIPT

OC000000013261850

116
PEARNE & GORDON LLP
1801 EAST 9TH STREET
SUITE 1200
CLEVELAND, OH 44114-3108

Date Mailed: 07/16/2004

Receipt is acknowledged of this regular Patent Application. It will be considered in its order and you will be notified as to the results of the examination. Be sure to provide the U.S. APPLICATION NUMBER, FILING DATE, NAME OF APPLICANT, and TITLE OF INVENTION when inquiring about this application. Fees transmitted by check or draft are subject to collection. Please verify the accuracy of the data presented on this receipt. **If an error is noted on this Filing Receipt, please write to the Office of Initial Patent Examination's Filing Receipt Corrections, facsimile number 703-746-9195. Please provide a copy of this Filing Receipt with the changes noted thereon. If you received a "Notice to File Missing Parts" for this application, please submit any corrections to this Filing Receipt with your reply to the Notice. When the USPTO processes the reply to the Notice, the USPTO will generate another Filing Receipt incorporating the requested corrections (if appropriate).**

Applicant(s)

Jan Frieding, Rapperswil, SWITZERLAND;
Jurg Sudan, Zurich, SWITZERLAND;

Assignment For Published Patent Application

Phonak AG, Stafa, SWITZERLAND;

Domestic Priority data as claimed by applicant

Foreign Applications

If Required, Foreign Filing License Granted: 06/07/2004

Projected Publication Date: 09/29/2005

Non-Publication Request: No

Early Publication Request: No

Title

Component arranged directly on a t-coil

Preliminary Class

381

LICENSE FOR FOREIGN FILING UNDER
Title 35, United States Code, Section 184
Title 37, Code of Federal Regulations, 5.11 & 5.15

GRANTED

The applicant has been granted a license under 35 U.S.C. 184, if the phrase "IF REQUIRED, FOREIGN FILING LICENSE GRANTED" followed by a date appears on this form. Such licenses are issued in all applications where the conditions for issuance of a license have been met, regardless of whether or not a license may be required as set forth in 37 CFR 5.15. The scope and limitations of this license are set forth in 37 CFR 5.15(a) unless an earlier license has been issued under 37 CFR 5.15(b). The license is subject to revocation upon written notification. The date indicated is the effective date of the license, unless an earlier license of similar scope has been granted under 37 CFR 5.13 or 5.14.

This license is to be retained by the licensee and may be used at any time on or after the effective date thereof unless it is revoked. This license is automatically transferred to any related applications(s) filed under 37 CFR 1.53(d). This license is not retroactive.

The grant of a license does not in any way lessen the responsibility of a licensee for the security of the subject matter as imposed by any Government contract or the provisions of existing laws relating to espionage and the national security or the export of technical data. Licensees should apprise themselves of current regulations especially with respect to certain countries, of other agencies, particularly the Office of Defense Trade Controls, Department of State (with respect to Arms, Munitions and Implements of War (22 CFR 121-128)); the Office of Export Administration, Department of Commerce (15 CFR 370.10 (j)); the Office of Foreign Assets Control, Department of Treasury (31 CFR Parts 500+) and the Department of Energy.

NOT GRANTED

No license under 35 U.S.C. 184 has been granted at this time, if the phrase "IF REQUIRED, FOREIGN FILING LICENSE GRANTED" DOES NOT appear on this form. Applicant may still petition for a license under 37 CFR 5.12, if a license is desired before the expiration of 6 months from the filing date of the application. If 6 months has lapsed from the filing date of this application and the licensee has not received any indication of a secrecy order under 35 U.S.C. 181, the licensee may foreign file the application pursuant to 37 CFR 5.15(b).

SPE: V. Chin

SPE RESPONSE FOR CERTIFICATE OF CORRECTION

Paper No.: _____

DATE : 6/13/07

TO SPE OF : ART UNIT 2615

SUBJECT : Request for Certificate of Correction for Appl. No.: 10/810,945 Patent No.: 7172436

Please respond to this request for a certificate of correction within 7 days.

Please review the requested changes/corrections as shown in the **COCIN** document(s) in the IFW application image. No new matter should be introduced, nor should the scope or meaning of the claims be changed.

Please complete the response (see below) and forward the completed response to scanning using document code **COCX**.

Lamonte M. Newsome
Certificates of Correction Branch
703-308-9390 ext. 112

Thank You For Your Assistance

The request for issuing the above-identified correction(s) is hereby:

Note your decision on the appropriate box.

- ☒ **Approved** — All changes apply.
- ☐ **Approved in Part** — Specify below which changes **do not** apply.
- ☐ **Denied** — State the reasons for denial below.

Comments: _____

SLR
SPE

2615
Art Unit

UNITED STATES PATENT AND TRADEMARK OFFICE

Commissioner for Patents
United States Patent and Trademark Office
P.O. Box 1450
Alexandria, VA 22313-1450
www.uspto.gov

3M INNOVATIVE PROPERTIES COMPANY
PO BOX 33427
ST. PAUL MN 55133-3427

5/4/09

In re Application of:
HENDERSON, CHRISTOPHER P. et al
Serial No.: 10/810,958
Filed: Mar. 26, 2004
Attorney Docket No: 59698US002
Title: NON-ELASTOMERIC RESPIRATOR MASK THAT HAS DEFORMABLE CHEEK PORTIONS

DECISION ON PETITION

This is a decision on the petition filed on October 2, 2008 requesting a reversal of the examiner's 35 U.S.C. 132 objection to an amendment to the specification which amends definitions of "Mask body" and "Rigid insert" on page 4 of the specification.

The petition is DISMISSED.

The record shows the following relevant facts:

1. On May 24, 2007, applicant filed an amendment to the current application, including amendments on page 4 of the specification regarding modified definitions of "mask body" and "rigid insert".
2. On June 18, 2007, the examiner objected to the amended definitions of "mask body" and "rigid insert" as new matter under 35 U.S.C. § 132.
3. On September 27, 2007, applicant filed a request for reconsideration stating that the amendment in the specification was supported by originally filed disclosure and is not new matter.
4. On December 12, 2007, the examiner issued a Final Office Action again objecting to the specification amendment as new matter not supported by the original disclosure.
5. The applicant filed a RCE on July 9, 2008 and requested re-open prosecution.
6. On September 23, 2008, the examiner issued a Non-final Office action, *inter alia,* again objecting to the specification amendment as new matter not supported by the original disclosure.
7. On October 2, 2008, the current petition was filed seeking the withdrawal of the holding of new matter.

Applicable Statutes, Rules and Regulations

35 U.S.C. § 132 states in relevant part: "No amendment shall introduce new matter into the disclosure of the invention."

MPEP § 608.04(c) states in relevant part: "Where the new matter is confined to amendments to the specification, review of the examiner's requirement for cancellation is by way of petition."

Discussion

The applicant attempted to make an amendment to the specification May 24, 2007. The amendment in question states:

> "Mask body" means the part(s) of a respiratory mask that extends in spaced relation away from a wearer's face during use and over their ~~a structural member that is configured to fit over a person's nose~~ and mouth to help ~~and that helps~~ define an interior gas space that is separate from an exterior gas space;
> "Rigid insert" refers to a relatively stiff structural member that has been used on respiratory masks to provide adequate structure for attaching fluid communication components such as filter cartridges and exhalation valves while being joined to a more compliant mask body part ~~portion~~ that makes contact with and generally conforms to a wearer's face.

Comparing the added portion of the language (added words by underlined) and the removed portions of the language (deleted words by strikethrough line) in the amendment to the specification, there are differences in meaning.

The question in this petition is whether or not the amended specification is new matter under 35 U.S.C. § 132. The Section 132 of 35 U.S.C. does not allow new matter to be disclosed in the specification because it would be improper to change to scope of the specification outside the original disclosure. Petitioner is of the opinion that the May 24, 2007 amendment is not new matter under 35 U.S.C. 132.

In the petition, petitioner in essence argues that applicants' amendment to the definitions of mask body and rigid insert has only made explicit what has been otherwise already disclosed in the originally filed specification and drawings. Therefore, the objection to these modified definitions are not modifications that would constitute new matter under the terms of 35 USC § 132. Petitioner also points to the original specification at page 3, lines 29-31 and page 4. lines 8-12 and in Figures 1-3 and at pages 5-9 and 11-13 to show the support of the modified definitions. In particular, the original definition of mask body further indicates that the mask body is a structural member that is configured to fit over a person's nose mad mouth to help define an interior gas space separate from an exterior gas space. In view of the originally filed drawings, description in the specification and the language used in the original definitions, petitioner believes the present modified definition of mask body does not constitute new matter.

A careful study of the mask body definition found on page 3 lines 29-31, the specification only states "Exterior gas space means the ambient atmospheric gas space that surrounds a mask body when worn on a person and that ultimately receives exhaled gas after it exits the interior gas space of a mask". Nothing is mentioned about the parts of respiratory mask that extends in spaced relation away from wearer's face during use and over their nose and mouth. In reference to support for this mask body definition found on page 4 lines 8-12, the specification only recites "Mask body means a structural member that is configured to fit over a person's nose and mouth and that helps define an interior gas space separate from an exterior gas space". Nothing is mentioned about the parts of respiratory mask that extends in spaced relation away from wearer's face during use and over their nose and mouth. In reference to support for this mask body definition found on page 5 lines 9 and 10, the specification describes "Mask 10 fits over a wearer's nose and mouth of a person but not over their eyes, and hence is often referred to as a half mask". Nothing is mentioned about the parts of respiratory mask that extends in spaced relation away from wearer's face during use and over their nose and mouth. Furthermore, none of the figures show parts of respiratory mask that extends in spaced relation away from wearer's face during use the arrows in figures 2 and 3 indicate towards the users face not away from the wearer's face as defined.

In the petition, in essence petitioner argues that the definition of rigid insert can be found on page 1 of the specification at lines 17-31 and in the original definition at page 4, lines 19-22. The applicants have only changed the term "portion" to "mask body part". The new language "mask body part" merely improves upon tile original "portion" wording. As such, petitioner does not believe the revised definition of rigid insert could constitute new matter.

A careful study of the rigid insert definition found on page 1 lines 17-31, there is no mention of "mask body part" at all. In reference to support for this rigid insert definition found on page 4 lines 19-22, the specification recites "Rigid insert refers to a relatively stiff structural member that has been used on respiratory masks to provide adequate structure for attaching fluid communication components such as filter cartridges and exhalation valves while being joined to a more compliant portion that makes contact with and generally conforms to a wearer's face". Again, no mention of mask body part.

Based on the above analysis, the added modified definitions of mask body and rigid insert do change the scope of the disclosure, and therefore constitutes new matter. 35 U.S.C. § 132 prohibits new matter in an amendment to the disclosure, so the examiner correctly objected to the amendment to the disclosure.

Conclusion

For the foregoing reasons, the relief requested by petitioner cannot be granted. Specifically, the examiner correctly objected to the amendment to the specification since it added new matter to the disclosure.

The application is being forwarded to the examiner via the Supervisory Patent Examiner of Art Unit 3772 for consideration of the 37 CFR 1.111 amendment filed on December 18, 2008.

Any inquiry regarding this decision should be directed to Henry Yuen, Special Programs Examiner, at (571) 272-4856. Any request for reconsideration of this decision must be submitted within TWO (2) MONTHS from the mail date of this decision, 37 CFR 1.181(f). No extension of time under 37 CFR 1.136(a) is permitted. The reconsideration request should include a cover letter entitled "Renewed Petition under 37 CFR 1.181".

PETITION DISMISSED.

Donald T. Hajec, Director
Technology Center 3700

UNITED STATES PATENT AND TRADEMARK OFFICE

COMMISSIONER FOR PATENTS
UNITED STATES PATENT AND TRADEMARK OFFICE
P.O. BOX 1450
ALEXANDRIA, VA 22313-1450
www.uspto.gov

HARMAN - BRINKS HOFER CHICAGO
Brinks Hofer Gilson & Lione
P.O. Box 10395
Chicago IL 60610

COPY MAILED

JAN 27 2009

OFFICE OF PETITIONS

In re Application of	:	
DAVID H. GRIESINGER	:	LETTER REGARDING
Application No. 10/810,989	:	PATENT TERM ADJUSTMENT
Filed: March 26, 2004	:	
Attorney Docket No. 11336-699	:	
(P02056US U3C)	:	

This letter is in response to the "REQUEST FOR REVIEW OF PATENT TERM ADJUSTMENT," filed October 31, 2008. Pursuant to applicant's duty of good faith and candor to the Office, applicant requests that the determination of patent term adjustment under 35 U.S.C. 154(b) be reviewed for accuracy.

The request for review of the initial Determination of Patent Term Adjustment is **GRANTED**.

The Office has updated the PAIR screen to reflect that the correct Patent Term Adjustment (PTA) determination at the time of the mailing of the notice of allowance is **316 days**. A copy of the updated PAIR screen, showing the correct determination, is enclosed.

On August 8, 2008, the Office mailed the Determination of Patent Term Adjustment under 35 U.S.C. 154(b) in the above-identified application. The Notice stated that the patent term adjustment was 346 days. On October 31, 2008, applicant submitted the instant comment.

Applicant requests that the Office recalculate the period of patent term adjustment. Applicant does not state a basis for

applicant's disagreement with the according of 346 days of patent term adjustment.

A review of the application history confirms that applicant should have been assessed a delay under 37 CFR 1.704(c)(8) for the submission of Information Disclosure Statements on October 29, 2007, and November 16, 2007.

37 CFR 1.704(c)(8) provides:

> (8) Submission of a supplemental reply or other paper, other than a supplemental reply or other paper expressly requested by the examiner, after a reply has been filed, in which case the period of adjustment set forth in § 1.703 shall be reduced by the number of days, if any, beginning on the day after the date the initial reply was filed and ending on the date that the supplemental reply or other such paper was filed.

It is undisputed that after filing a response on October 17, 2007, applicant filed Information Disclosure Statements on October 29, 2007 and November 16, 2007. The record does not support a conclusion that the examiner expressly requested the Information Disclosure Statements. Further, a review of the Information Disclosure Statements, filed October 29, 2007 and November 16, 2007, reveal that applicant did not include a proper statements under 37 CFR 1.704(d).[1] Thus, applicant failed to engage in reasonable efforts to conclude prosecution of the application.

---

[1] Pursuant to 37 CFR 1.704(d):

> A paper containing only an information disclosure statement in compliance with §§ 1.97 and 1.98 will not be considered a failure to engage in reasonable efforts to conclude prosecution (processing or examination) of the application under paragraphs (c)(6), (c)(8), (c)(9), or (c)(10) of this section if it is accompanied by a statement that each item of information contained in the information disclosure statement was first cited in any communication from a foreign patent office in a counterpart application and that this communication was not received by any individual designated in § 1.56(c) more than thirty days prior to the filing of the information disclosure statement. This thirty-day period is not extendable.

Pursuant to 37 CFR 1.704(c)(8), a first period of reduction of 12 days should have been entered, counting the number of days beginning on the day after the date the initial reply was filed, October 18, 2007, and ending on the date that the IDS was filed, October 29, 2007. See 37 CFR 1.704(c)(8). Pursuant to 37 CFR 1.704(c)(8) a second period of reduction of 30 days should have been entered, counting the number of days beginning on the day after the date the initial reply was filed, October 18, 2007, and ending on the date that the second IDS was filed, November 16, 2007.

37 CFR 1.704(c) provides that "[c]ircumstances that constitute a failure of the applicant to engage in reasonable efforts to conclude processing or examination of an application … will result in the following reduction of the period of adjustment set forth in § 1.703 to the extent that the periods are not overlapping." The first period of reduction of 12 days pursuant to 37 CFR 1.704(c)(8) totally overlaps with the second period of reduction of 30 days. Accordingly, a single period of reduction of 30 days is being entered for these two periods of reduction.

In view thereof, the correct patent term adjustment at the time of the mailing of the notice of allowance is **316 days** (476 days of Office delay - 160 days of applicant delay).

As this letter was submitted as an advisement to the Office of an error in applicant's favor, the Office will not assess the $200.00 fee as set forth in 37 CFR 1.18(e). The Office thanks applicant for applicant's good faith and candor in bringing this to the attention of the Office.

Applicant is reminded that any delays by the Office pursuant to 37 CFR 1.702(a)(4) and 1.702(b) and any applicant delays under 37 CFR 1.704(c)(10) will be calculated at the time of the issuance of the patent and applicant will be notified in the Issue Notification letter that is mailed to applicant approximately three weeks prior to issuance.

The Office of Data Management has been advised of this decision. This matter is being referred to the Office of Data Management for issuance of the patent.

Telephone inquiries specific to this matter should be directed to Christina Tartera Donnell, Senior Petitions Attorney, at (571) 272-3211.

Kery A. Fries

Kery A. Fries
Senior Legal Attorney
Office of Patent Legal Administration

Enclosure: Copy of updated PAIR screen

Day : Tuesday
Date: 1/27/2009

PALM INTRANET

Time: 09:23:29

PTA Calculations for Application: 10/810989			
Application Filing Date:	03/26/2004	PTO Delay (PTO):	476
Issue Date of Patent:		Three Years:	0
Pre-Issue Petitions:	0	Applicant Delay (APPL):	130
Post-Issue Petitions:	0	Total PTA (days):	316
PTO Delay Adjustment:	-30		

File Contents History

Number	Date	Contents Description	PTO	APPL	START
85	01/27/2009	ADJUSTMENT OF PTA CALCULATION BY PTO		30	
71	08/08/2008	MAIL NOTICE OF ALLOWANCE			
70	08/04/2008	ISSUE REVISION COMPLETED			
69	08/04/2008	DOCUMENT VERIFICATION			
68	08/04/2008	NOTICE OF ALLOWANCE DATA VERIFICATION COMPLETED			
67	08/04/2008	NOTICE OF ALLOWABILITY			
66	05/20/2008	DATE FORWARDED TO EXAMINER			
65	05/08/2008	RESPONSE AFTER NON-FINAL ACTION			
64	02/08/2008	MAIL NON-FINAL REJECTION			
63	02/04/2008	NON-FINAL REJECTION			
62	10/29/2007	INFORMATION DISCLOSURE STATEMENT CONSIDERED			
61	11/16/2007	INFORMATION DISCLOSURE STATEMENT CONSIDERED			
59	11/27/2007	MAIL EXAMINER INTERVIEW SUMMARY (PTOL - 413)			
58	11/16/2007	EXAMINER INTERVIEW SUMMARY RECORD (PTOL - 413)			
57	11/16/2007	REFERENCE CAPTURE ON IDS			
56	11/16/2007	INFORMATION DISCLOSURE STATEMENT (IDS) FILED			
55	10/29/2007	REFERENCE CAPTURE ON IDS			
54	10/29/2007	INFORMATION DISCLOSURE STATEMENT (IDS) FILED			
53	11/16/2007	INFORMATION DISCLOSURE STATEMENT (IDS) FILED			
52	10/29/2007	INFORMATION DISCLOSURE STATEMENT (IDS)			

		FILED			
51	10/22/2007	DATE FORWARDED TO EXAMINER			
50	10/17/2007	AMENDMENT SUBMITTED/ENTERED WITH FILING OF CPA/RCE			
47	10/22/2007	DATE FORWARDED TO EXAMINER			
46	10/17/2007	REQUEST FOR CONTINUED EXAMINATION (RCE)		61	41
45	10/22/2007	DISPOSAL FOR A RCE/CPA/129 (EXPRESS ABANDONMENT IF CPA)			
44	10/17/2007	WORKFLOW - REQUEST FOR RCE - BEGIN			
43	06/13/2007	MAIL EXAMINER INTERVIEW SUMMARY (PTOL - 413)			
42	05/31/2007	EXAMINER INTERVIEW SUMMARY RECORD (PTOL - 413)			
41	05/17/2007	MAIL FINAL REJECTION (PTOL - 326)			
40	05/14/2007	FINAL REJECTION			
39	11/01/2006	INFORMATION DISCLOSURE STATEMENT CONSIDERED			
38	03/06/2007	DATE FORWARDED TO EXAMINER			
37	02/21/2007	RESPONSE AFTER NON-FINAL ACTION		69	34
36	02/21/2007	REQUEST FOR EXTENSION OF TIME - GRANTED			
35.7	11/01/2006	INFORMATION DISCLOSURE STATEMENT (IDS) FILED			
35	11/01/2006	INFORMATION DISCLOSURE STATEMENT (IDS) FILED			
34	09/14/2006	MAIL NON-FINAL REJECTION	476		-1
33	08/21/2006	NON-FINAL REJECTION			
32	05/13/2004	INFORMATION DISCLOSURE STATEMENT CONSIDERED			
31	01/09/2006	INFORMATION DISCLOSURE STATEMENT CONSIDERED			
30	08/08/2006	CASE DOCKETED TO EXAMINER IN GAU			
29	03/21/2006	CASE DOCKETED TO EXAMINER IN GAU			
28	01/09/2006	REFERENCE CAPTURE ON IDS			
27.7	01/09/2006	INFORMATION DISCLOSURE STATEMENT (IDS) FILED			
27	01/09/2006	INFORMATION DISCLOSURE STATEMENT (IDS) FILED			
26	06/06/2005	CASE DOCKETED TO EXAMINER IN GAU			
25	05/25/2005	CASE DOCKETED TO EXAMINER IN GAU			

24	04/11/2005	CASE DOCKETED TO EXAMINER IN GAU			
23	02/19/2005	CASE DOCKETED TO EXAMINER IN GAU			
22	02/19/2005	CASE DOCKETED TO EXAMINER IN GAU			
21	02/11/2005	CASE DOCKETED TO EXAMINER IN GAU			
20	11/10/2004	IFW TSS PROCESSING BY TECH CENTER COMPLETE			
19	05/13/2004	REFERENCE CAPTURE ON IDS			
18.7	05/13/2004	INFORMATION DISCLOSURE STATEMENT (IDS) FILED			
18	05/13/2004	INFORMATION DISCLOSURE STATEMENT (IDS) FILED			
17	11/10/2004	CASE DOCKETED TO EXAMINER IN GAU			
16	06/07/2004	APPLICATION RETURN FROM OIPE			
15	06/07/2004	APPLICATION RETURN TO OIPE			
14	06/07/2004	APPLICATION RETURN FROM OIPE			
13	06/08/2004	APPLICATION IS NOW COMPLETE			
12	06/08/2004	PRE-EXAM OFFICE ACTION WITHDRAWN			
11	06/07/2004	APPLICATION RETURN TO OIPE			
10	06/07/2004	APPLICATION RETURN FROM OIPE			
9	06/08/2004	APPLICATION IS NOW COMPLETE			
8	06/08/2004	PRE-EXAM OFFICE ACTION WITHDRAWN			
7	06/07/2004	APPLICATION RETURN TO OIPE			
6	06/07/2004	APPLICATION DISPATCHED FROM OIPE			
5	06/08/2004	APPLICATION IS NOW COMPLETE			
4	04/23/2004	CLEARED BY OIPE CSR			
3	04/23/2004	CASE CLASSIFIED BY OIPE			
2	04/16/2004	IFW SCAN & PACR AUTO SECURITY REVIEW			
1	03/26/2004	INITIAL EXAM TEAM NN			

Search Another: Application# [ ] Search

EXPLANATION OF PTA CALCULATION

EXPLANATION OF PTE CALCULATION

To go back, right click here and select Back. To go forward, right click here and select Forward. To refresh, right click here and select Refresh.

Back to OASIS | Home page

UNITED STATES PATENT AND TRADEMARK OFFICE

Commissioner for Patents
United States Patent and Trademark Office
P.O. Box 1450
Alexandria, VA 22313-1450
www.uspto.gov

HARMAN - BRINKS HOFER CHICAGO
Brinks Hofer Gilson & Lione
P.O. Box 10395
Chicago IL 60610

MAILED

APR 0 3 2009

OFFICE OF PETITIONS

In re Application of	:	
DAVID H. GRIESINGER	:	LETTER REGARDING
Application No. 10/810,989	:	PATENT TERM ADJUSTMENT
Filed: March 26, 2004	:	
Attorney Docket No. 11336-699	:	
(P02056US U3C)	:	

This letter is in response to the "REQUEST FOR REVIEW OF PATENT TERM ADJUSTMENT," filed October 31, 2008. Pursuant to applicant's duty of good faith and candor to the Office, applicant requests that the determination of patent term adjustment under 35 U.S.C. 154(b) be reviewed for accuracy.

The request for review of the initial Determination of Patent Term Adjustment is **GRANTED**.

The Office has updated the PAIR screen to reflect that the correct Patent Term Adjustment (PTA) determination at the time of the mailing of the notice of allowance is **316 days**. A copy of the updated PAIR screen, showing the correct determination, is enclosed.

On August 8, 2008, the Office mailed the Determination of Patent Term Adjustment under 35 U.S.C. 154(b) in the above-identified application. The Notice stated that the patent term adjustment was 346 days. On October 31, 2008, applicant submitted the instant comment.

Applicant requests that the Office recalculate the period of patent term adjustment. Applicant does not state a basis for

applicant's disagreement with the according of 346 days of patent term adjustment.

A review of the application history confirms that applicant should have been assessed a delay under 37 CFR 1.704(c)(8) for the submission of Information Disclosure Statements on October 29, 2007, and November 16, 2007.

37 CFR 1.704(c)(8) provides:

> (8) Submission of a supplemental reply or other paper, other than a supplemental reply or other paper expressly requested by the examiner, after a reply has been filed, in which case the period of adjustment set forth in § 1.703 shall be reduced by the number of days, if any, beginning on the day after the date the initial reply was filed and ending on the date that the supplemental reply or other such paper was filed.

It is undisputed that after filing a response on October 17, 2007, applicant filed Information Disclosure Statements on October 29, 2007 and November 16, 2007. The record does not support a conclusion that the examiner expressly requested the Information Disclosure Statements. Further, a review of the Information Disclosure Statements, filed October 29, 2007 and November 16, 2007, reveal that applicant did not include a proper statements under 37 CFR 1.704(d).[1] Thus, applicant failed to engage in reasonable efforts to conclude prosecution of the application.

---

[1] Pursuant to 37 CFR 1.704(d):

> A paper containing only an information disclosure statement in compliance with §§ 1.97 and 1.98 will not be considered a failure to engage in reasonable efforts to conclude prosecution (processing or examination) of the application under paragraphs (c)(6), (c)(8), (c)(9), or (c)(10) of this section if it is accompanied by a statement that each item of information contained in the information disclosure statement was first cited in any communication from a foreign patent office in a counterpart application and that this communication was not received by any individual designated in § 1.56(c) more than thirty days prior to the filing of the information disclosure statement. This thirty-day period is not extendable.

Pursuant to 37 CFR 1.704(c)(8), a first period of reduction of 12 days should have been entered, counting the number of days beginning on the day after the date the initial reply was filed, October 18, 2007, and ending on the date that the IDS was filed, October 29, 2007. See 37 CFR 1.704(c)(8). Pursuant to 37 CFR 1.704(c)(8) a second period of reduction of 30 days should have been entered, counting the number of days beginning on the day after the date the initial reply was filed, October 18, 2007, and ending on the date that the second IDS was filed, November 16, 2007.

37 CFR 1.704(c) provides that "[c]ircumstances that constitute a failure of the applicant to engage in reasonable efforts to conclude processing or examination of an application … will result in the following reduction of the period of adjustment set forth in § 1.703 to the extent that the periods are not overlapping." The first period of reduction of 12 days pursuant to 37 CFR 1.704(c)(8) totally overlaps with the second period of reduction of 30 days. Accordingly, a single period of reduction of 30 days is being entered for these two periods of reduction.

In view thereof, the correct patent term adjustment at the time of the mailing of the notice of allowance is **316 days** (476 days of Office delay - 160 days of applicant delay).

As this letter was submitted as an advisement to the Office of an error in applicant's favor, the Office will not assess the $200.00 fee as set forth in 37 CFR 1.18(e). The Office thanks applicant for applicant's good faith and candor in bringing this to the attention of the Office.

Applicant is reminded that any delays by the Office pursuant to 37 CFR 1.702(a)(4) and 1.702(b) and any applicant delays under 37 CFR 1.704(c)(10) will be calculated at the time of the issuance of the patent and applicant will be notified in the Issue Notification letter that is mailed to applicant approximately three weeks prior to issuance.

The Office of Data Management has been advised of this decision. This matter is being referred to the Office of Data Management for issuance of the patent.

Telephone inquiries specific to this matter should be directed to Christina Tartera Donnell, Senior Petitions Attorney, at (571) 272-3211.

Kery A. Fries

Kery A. Fries
Senior Legal Attorney
Office of Patent Legal Administration

Enclosure: Copy of updated PAIR screen

UNITED STATES PATENT AND TRADEMARK OFFICE

Commissioner for Patents
United States Patent and Trademark Office
P.O. Box 1450
Alexandria, VA 22313-1450
www.uspto.gov

ROBERT DEBERARDINE
ABBOTT LABORATORIES
100 ABBOTT PARK ROAD
DEPT. 377/AP6A
ABBOTT PARK IL 60064-6008

COPY MAILED

MAR 2 3 2007

OFFICE OF PETITIONS

In re Application of	:	
Michael R. Scrimpf, et al.	:	
Application No. 10/810,999	:	DECISION ON PETITION
Filed: March 26, 2004	:	
Attorney Docket No. 6696USD1	:	

This is a decision on the petition under the unintentional provisions of 37 CFR 1.137(b), filed November 27, 2006, to revive the above-identified application.

The petition is **GRANTED**.

The application became abandoned for failure to reply in a timely manner to the non-final Office action mailed, April 26, 2006, which set a shortened statutory period for reply of three (3) months. No extensions of time under the provisions of 37 CFR 1.136(a) were obtained. Accordingly, the application became abandoned on July 27, 2006.

The petition satisfies the requirements of 37 CFR 1.137(b) in that petitioner has supplied (1) the reply in the form of an amendment, (2) the petition fee of $1500; and (3) an adequate statement of unintentional delay.

37 CFR 1.137(b)(3) requires a statement that "the entire delay in filing the required reply from the due date for the reply until the filing of a grantable petition pursuant to 37 CFR 1.137(b) was unintentional." Since the statement appearing in the petition varies from the language required by 37 CFR 1.137(b)(3), the statement is being construed as the required statement. Petitioner must notify the Office if this is **not** a correct reading of the statement appearing in the petition.

Telephone inquiries concerning this decision should be directed to April Wise at (571) 272-1642.

This application is being referred to Technology Center AU 1624 for appropriate action by the Examiner in the normal course of business on the reply received.

Irvin Dingle
Petitions Examiner
Office of Petitions

UNITED STATES PATENT AND TRADEMARK OFFICE

Commissioner for Patents
United States Patent and Trademark Office
P.O. Box 1450
Alexandria, VA 22313-1450
www.uspto.gov

MEYERTONS, HOOD, KIVLIN, KOWERT & GOETZEL, P.C.
P.O. BOX 398
AUSTIN TX 78767-0398

COPY MAILED
JAN 14 2010

In re Application of	:	
James Jolly Clark, et al.	:	
Application No. 10/811,017	:	DECISION ON PETITION
Filed: March 26, 2004	:	
Attorney Docket No. 5853-00504	:	

This is a decision on the petition under the unintentional provisions of 37 CFR 1.137(b), filed November 9, 2009, to revive the above-identified application.

The petition is **GRANTED**.

The two-month period for filing an appeal brief under 37 CFR 41.37 (accompanied by the fee required by 37 CFR 41.20(b)(2)), runs from the date of this decision.

This application became abandoned for failure to timely file a reply within the meaning of 37 CFR 1.113 to the final Office action of August 11, 2008. The proposed reply required for consideration of a petition to revive must be a Notice of Appeal (and appeal fee required by 37 CFR 41.20(b)(2)), an amendment that *prima facie* places the application in condition for allowance, a Request for Continued Examination (RCE) and submission (37 CFR 1.114), or the filing of a continuing application under 37 CFR 1.53(b). See MPEP 711.03(c)(III)(A)(2). No extensions of time pursuant to the provisions of 37 CFR 1.136(a) was obtained. Accordingly, the date of abandonment of this application is November 12, 2008. The Notice of Abandonment mailed April 16, 2009.

The petition satisfies the requirements of 37 CFR 1.137(b) in that petitioner has supplied (1) the reply in the form of a Notice of Appeal; (2) the petition fee of $810; and (3) a proper statement of unintentional delay.

Telephone inquiries concerning this decision should be directed to Terri Johnson at (571) 272-2991.

This application is being referred to Technology Center AU 2121 to await the filing of an appeal brief or for such other appropriate reply as may be submitted to continue prosecution of the application.

Terri Johnson
Petitions Examiner
Office of Petitions

UNITED STATES PATENT AND TRADEMARK OFFICE

Commissioner for Patents
United States Patent and Trademark Office
P. O. Box 1450
Alexandria, VA 22313-1450
www.uspto.gov

BRINKS HOFER GILSON & LIONE
P.O. BOX 10395
CHICAGO IL 60610

COPY MAILED

NOV 0 1 2004

OFFICE OF PETITIONS

In re Application of
Nakano et al.
Application No. 10/811,034
Filed: August 27, 2004
Attorney Docket No. 9281/4822

DECISION ON PETITION

This is a decision on the petition under 37 CFR 1.182, filed August 27, 2004, requesting that the above-identified application be accorded the later filing date of August 27, 2004, the date omitted Figures 33-34 were filed with the United States Patent and Trademark (Office).

The Office records indicate that the application has been accorded a filing date of August 27, 2004, the date of omitted Figures 33-34.

Accordingly, the petition is **dismissed** as involving a moot issue.

Any inquiries related to this decision should be directed to the undersigned at (703) 306-5589.

Christina Tartera Donnell

Christina Tartera Donnell
Senior Petitions Attorney
Office of Petitions

UNITED STATES PATENT AND TRADEMARK OFFICE

Commissioner for Patents
United States Patent and Trademark Office
P.O. Box 1450
Alexandria, VA 22313-1450
www.uspto.gov

MAILED
FROM DIRECTORS OFFICE

DEC 0 3 2004

TECHNOLOGY CENTER 3600

John D. Jeter
P.O. Box 846
St. Martinville, LA 70582

In re application of Thomas E. Falgout Sr. et al. Application No. 10/811,037 Filed: March 26, 2004 For: SEALED FLEXIBLE MOTOR COUPLING	: : : :	**DECISION ON PETITION TO MAKE SPECIAL (APPLICANT'S AGE)**

This is a decision on the petition submitted on March 26, 2004 under 37 CFR 1.102 (c) to make the above-identified application special under the accelerated examination procedure set forth in MPEP 708.02, Section IV: Applicant's Age.

The petition is **GRANTED**.

An application may be accorded special status upon the filing of a petition providing evidence showing that the applicant is at least 65 years old. Such a showing may be provided by evidence such as a birth certificate or a statement from the applicant.

The evidence submitted with the petition is a signed declaration indicating Mr. Falgout is at least 65 years of age.

The examiner is directed (1) to make an interference search for possible interfering applications, (2) to promptly examine this application out of turn, and (3) if any interfering application is discovered, to examine such application simultaneously and state in the first official letter of such application that it is being taken out of turn because of a possible interference.

Petitioner is advised that this application will continue to be special, throughout its entire prosecution and pendency, including interference or appeal, if any, only if petitioner makes a prompt ***bona fide*** effort, in response to each Office action, to place the application in condition for allowance, even if it is necessary to conduct an interview with the examiner to accomplish this purpose.

SUMMARY: Petition to Make Special **GRANTED**.

Randolph G Rose for

Kenneth J. Dorner
Special Programs Examiner
Technology Center 3600
(703) 308-0866

KJD/slb: 11/01/04

UNITED STATES PATENT AND TRADEMARK OFFICE

UNITED STATES DEPARTMENT OF COMMERCE
United States Patent and Trademark Office
Address: COMMISSIONER FOR PATENTS
P.O. Box 1450
Alexandria, Virginia 22313-1450
www.uspto.gov

THE LAW OFFICE OF KIRK D. WILLIAMS
PO BOX 39425
DENVER, CO 80239-0425

Mail Date: 04/21/2010

Applicant	: John J. Williams JR.	: DECISION ON REQUEST FOR
Patent Number	: 7627573	: RECALCULATION of PATENT
Issue Date	: 12/01/2009	: TERM ADJUSTMENT IN VIEW
Appliction No	: 10/811,044	: OF WYETH AND NOTICE OF INTENT TO
Filed	: 03/27/2004	: ISSUE CERTIFICATE OF CORRECTION
		:

The Request for Recalculation is **GRANTED** to the extent indicated.

The patent term adjustment has been determined to be **838** days. The USPTO will *sua sponte* issue a certificate of correction reflecting the amount of PTA days determined by the recalculation.

Prior to the issuance of the certificate of correction, the USPTO will afford patentee an opportunity to be heard and request reconsideration. Accordingly, patentee has **one month or thirty (30) days**, whichever is longer, to file a request for reconsideration of this patent term adjustment calculation. See 35 U.S.C. 154(b)(3)(B)(ii) and 37 CFR 1.322(a)(4). No extensions of time will be granted under 37 CFR 1.136.

Patentee should use document code PET.OP if electronically filing a request for reconsideration of this patent term adjustment calculation. The patentee must also include the information required by 37 CFR 1.705(b)(2) and the fee required by 37 CFR 1.18(e). If patentee does not file a timely request for reconsideration of this patent term adjustment calculation including the information required by 37 CFR 1.705(b)(2) and the fee required by 37 CFR 1.18(e), the USPTO will issue a certificate of correction reflecting the PTA determination noted above.

Patentee should be aware that in order to preserve the right to review in the United States District Court for the District of Columbia of the USPTO patent term adjustment determination, patentee must ensure that he or she also take the steps required under 35 U.S.C. 154(b)(4)(A) in a timely manner. Nothing in the request for recalculation should be construed as providing an alternative time frame for commencing a civil action under 35 U.S.C. 154(b)(4)(A).

Any questions concerning this decision should be directed to the Office of Patent Legal Administration at 571-272-7702.

UNITED STATES PATENT AND TRADEMARK OFFICE

UNITED STATES DEPARTMENT OF COMMERCE
United States Patent and Trademark Office
Address: COMMISSIONER FOR PATENTS
P.O. Box 1450
Alexandria, Virginia 22313-1450
www.uspto.gov

THE LAW OFFICE OF KIRK D. WILLIAMS
PO BOX 39425
DENVER, CO 80239-0425

Mail Date: 05/18/2010

Applicant : John J. Williams JR.
Patent Number : 7627573
Issue Date : 12/01/2009
Application No : 10/811,044
Filed : 03/27/2004

: NOTICE CONCERNING IMPROPER
: CALCULATION OF PATENT TERM
: ADJUSTMENT BASED UPON USPTO
: IMPROPERLY MEASURING REDUCTION
: PERIOD UNDER 37 CFR 1.704(c)(10).

The United States Patent and Trademark Office (USPTO) discovered that in processing the recent recalculation decisions mailed in response to patentee's filed Request for Recalculation of Patent Term Adjustment in view of Wyeth, the USPTO improperly measured the reduction period for reductions under 37 CFR 1.704(c)(10). Pursuant to 37 CFR 1.704(c)(10), patentee's reduction begins on the date of filing the amendment under 37 CFR 1.312 ("1.312 amendment") or other related paper and ends on the date that the Office mails a response to the filing of the 1.312 amendment or other paper. It has been discovered that during the recalculation, the calculation failed to the limit the reduction to the mail date of the response to the 1.312 amendment or other paper. Accordingly, patentee's reductions were greater than warranted.

This notice **VACATES** the previous GRANTED request for recalculation and provides patentee with a revised GRANTED recalculation.

The patent term adjustment has been determined to be **934** days. The USPTO will *sua sponte* issue a certificate of correction reflecting the amount of patent term adjustment (PTA) days determined by the recalculation.

Prior to the issuance of the certificate of correction, the USPTO will afford patentee an opportunity to be heard and request reconsideration. Accordingly, patentee has **one month or thirty (30) days** from the mail date of this notice, whichever is longer, to file a request for reconsideration of this PTA calculation. See 35 U.S.C. § 154(b)(3)(B)(ii) and 37 CFR 1.322(a)(4).

Patentee should use document code PET.OP if electronically filing a request for reconsideration of this PTA calculation. The patentee must also include the information required by 37 CFR 1.705(b)(2), and the fee required by 37 CFR 1.18(e). If patentee does not file a timely request for reconsideration of this PTA calculation, including the information required by 37 CFR 1.705(b)(2) and the fee required by 37 CFR 1.18(e), the USPTO will issue a certificate of correction reflecting the PTA determination noted above.

Patentee should be aware that in order to preserve the right of review of the USPTO's PTA determination in the United States District Court for the District of Columbia, patentee must ensure that the steps required under 35 U.S.C. § 154 (b)(4) are taken in a timely manner. Nothing in the request for recalculation should be construed as providing an alternative time frame for commencing a civil action under 35 U.S.C. § 154(b)(4).

UNITED STATES PATENT AND TRADEMARK OFFICE

Commissioner for Patents
United States Patent and Trademark Office
P.O. Box 1450
Alexandria, VA 22313-1450
www.uspto.gov

Paper No. None

FULWIDER PATTON LEE & UTECHT, LLP
HOWARD HUGHES CENTER
6060 CENTER DRIVE
TENTH FLOOR
LOS ANGELES CA 90045

COPY MAILED

SEP 24 2004

OFFICE OF PETITIONS

In re Application of	:	
Karol Renau	:	
Application No. 10/811,061	:	
Filed: March 25, 2004	:	DECISION ON PETITION UNDER
Attorney Docket No. RENAU-64853	:	37 C.F.R. §1.53
Title: BREWING MACHINE POWER	:	
MANAGEMENT SYSTEM AND METHOD	:	

This is a decision on the petition filed August 9, 2004.

On March 25, 2004, the above-identified application was deposited. On June 10, 2004, the Office of Initial Patent Examination (OIPE) mailed a "Notice of Incomplete Nonprovisional Application - Filing Date Not Granted (notice)", stating that the application had not been accorded a filing date, and advising applicants that a filing date would be accorded upon the receipt of drawings. The Notice further indicated that the basic filing fee, the fee associated with the filing of additional claims, and an executed oath or declaration would be required, and set a two-month period for response.

On August 9, 2004, Petitioner submitted a "Submission of Missing Parts of Application," which is properly treated as a petition under 37 C.F.R. §1.53. The petition is further accompanied by a copy of a single sheet of drawings containing Figures 1-2, along with a copy of applicants' postcard receipt acknowledging receipt of "Drawings (1 sheets [sic])" in the United States Patent and Trademark Office (Office) on March 25, 2004. Applicants request that the application, including Figures 1-2, be accorded a filing date of March 25, 2004.

Upon review of the electronic record, the above-mentioned figures have not been located among the application papers. However, the evidence is convincing that the application papers deposited on March 25, 2004 included one sheet of drawings containing Figures 1-2, and the sheet containing these figures was subsequently misplaced in the Office.

Therefore, the application, including Figures 1-2, was complete on filing and entitled to a filing date of March 25, 2004 as part of the original disclosure.

Accordingly, the petition is **GRANTED**.

The portion of the notice mailed June 10, 2004 pertaining to the drawings was sent in error, and that portion is hereby **VACATED**. Therefore, no petition fee is necessary. The petition fee of $130 has not been charged to Petitioner's Deposit Account.

Receipt of the declaration, the filing fee and the fees associated with the filing of additional claims and the late submission of an oath or declaration is acknowledged.

The application file is being returned to the Office of Initial Patent Examination for further processing with a filing date of March 25, 2004, using the original application papers filed on that date, as well as Figures 1-2 submitted on August 9, 2004. OIPE will then mail a corrected filing receipt.

Telephone inquiries regarding this decision should be directed to the undersigned at (703) 305-0011. Please note that on approximately September 28, 2004, the Office of Petitions will relocate to the new PTO location in Alexandria. Although the mailing address will remain the same, the general phone number for the Office of Petitions which should be used for status requests will change to 571-272-3282, and the telephone number for the undersigned will change to 571-272-3225.

Paul Shanoski
Senior Attorney
Office of Petitions
United States Patent and Trademark Office

UNITED STATES PATENT AND TRADEMARK OFFICE

UNITED STATES DEPARTMENT OF COMMERCE
United States Patent and Trademark Office
Address: COMMISSIONER FOR PATENTS
P.O. Box 1450
Alexandria, Virginia 22313-1450
www.uspto.gov

FISH & RICHARDSON, P.C.
PO BOX 1022
MINNEAPOLIS, MN 55440-1022

Mail Date: 04/20/2010

Applicant	: Wolfgang Pfeifer	: DECISION ON REQUEST FOR
Patent Number	: 7624399	: RECALCULATION of PATENT
Issue Date	: 11/24/2009	: TERM ADJUSTMENT IN VIEW
Appliction No	: 10/811,063	: OF WYETH AND NOTICE OF INTENT TO
Filed	: 03/25/2004	: ISSUE CERTIFICATE OF CORRECTION
		:

The Request for Recalculation is **GRANTED** to the extent indicated.

The patent term adjustment has been determined to be **436** days. The USPTO will *sua sponte* issue a certificate of correction reflecting the amount of PTA days determined by the recalculation.

Prior to the issuance of the certificate of correction, the USPTO will afford patentee an opportunity to be heard and request reconsideration. Accordingly, patentee has **one month or thirty (30) days**, whichever is longer, to file a request for reconsideration of this patent term adjustment calculation. See 35 U.S.C. 154(b)(3)(B)(ii) and 37 CFR 1.322(a)(4). No extensions of time will be granted under 37 CFR 1.136.

Patentee should use document code PET.OP if electronically filing a request for reconsideration of this patent term adjustment calculation. The patentee must also include the information required by 37 CFR 1.705(b)(2) and the fee required by 37 CFR 1.18(e). If patentee does not file a timely request for reconsideration of this patent term adjustment calculation including the information required by 37 CFR 1.705(b)(2) and the fee required by 37 CFR 1.18(e), the USPTO will issue a certificate of correction reflecting the PTA determination noted above.

Patentee should be aware that in order to preserve the right to review in the United States District Court for the District of Columbia of the USPTO patent term adjustment determination, patentee must ensure that he or she also take the steps required under 35 U.S.C. 154(b)(4)(A) in a timely manner. Nothing in the request for recalculation should be construed as providing an alternative time frame for commencing a civil action under 35 U.S.C. 154(b)(4)(A).

Any questions concerning this decision should be directed to the Office of Patent Legal Administration at 571-272-7702.

FOLEY

FOLEY & LARDNER LLP
ATTORNEYS AT LAW
11250 EL CAMINO REAL, SUITE 200
SAN DIEGO, CA 92130
P.O. BOX 80278
SAN DIEGO, CA 92138-0278
TELEPHONE: 858.847.6700
FACSIMILE: 858.792.6773
WWW.FOLEY.COM

RECEIVED
CENTRAL FAX CENTER
NOV 1 1 2005

FACSIMILE TRANSMISSION

Total # of Pages 3 (including this page)

TO:	PHONE #:	FAX #:
Wesley D. Markham Group Art Unit 1762 U. S. Patent and Trademark Office	(571) 272-1422	(571) 273-8300

From : Steven C. Koerber, Ph. D. SK
Email Address : skoerber@foley.com
Sender's Direct Dial : 858.847.6725
Date : November 11, 2005
Client/Matter No : 029319-0201
User ID No : 4606

MESSAGE:

Re: U.S. Patent Application No. 10/811,065

Attachment:

Petition to Make Special Under 37 C.F.R. 1.102(c) and Statement Under 37 C.F.R. 1.102 (2 pgs.)

If there are any problems with this transmission or if you have not received all of the pages, please call 858.847.6700.

Operator:	Time Sent:	Return Original To: Mercedes F. "Ched" Dipasupil

CONFIDENTIALITY NOTICE: THE INFORMATION CONTAINED IN THIS FACSIMILE MESSAGE IS INTENDED ONLY FOR THE PERSONAL AND CONFIDENTIAL USE OF THE DESIGNATED RECIPIENTS NAMED ABOVE. THIS MESSAGE MAY BE AN ATTORNEY-CLIENT COMMUNICATION, AND AS SUCH IS PRIVILEGED AND CONFIDENTIAL. IF THE READER OF THIS MESSAGE IS NOT THE INTENDED RECIPIENT OR ANY AGENT RESPONSIBLE FOR DELIVERING IT TO THE INTENDED RECIPIENT, YOU ARE HEREBY NOTIFIED THAT YOU HAVE RECEIVED THIS DOCUMENT IN ERROR, AND THAT ANY REVIEW, DISSEMINATION, DISTRIBUTION OR COPYING OF THIS MESSAGE IS STRICTLY PROHIBITED. IF YOU HAVE RECEIVED THIS COMMUNICATION IN ERROR, PLEASE NOTIFY US IMMEDIATELY BY TELEPHONE AND RETURN THE ORIGINAL MESSAGE TO US BY MAIL. THANK YOU.

FOLEY & LARDNER LLP

DLMR_277382.1

PAGE 1/3 * RCVD AT 11/11/2005 6:41:57 PM [Eastern Standard Time] * SVR:USPTO-EFXRF-6/27 * DNIS:2738300 * CSID: * D

PETITION GRANTED

William Krynski
Special Program Examiner
TC 1700

NOV 2 1 2005

UNITED STATES PATENT AND TRADEMARK OFFICE

Commissioner for Patents
United States Patent and Trademark Office
P.O. Box 1450
Alexandria, VA 22313-1450
www.uspto.gov

CANTOR COLBURN, LLP
55 GRIFFIN ROAD SOUTH
BLOOMFIELD, CT 06002

COPY MAILED

JAN 3 1 2005

OFFICE OF PETITIONS

In re Application of: Gregory L. Plett	:	
Application No. 10/811,088	:	NOTICE
Filed: March 25, 2004	:	
Attorney Docket No. LGC-0004 (0009587-0006)	:	

This is a notice regarding your request for acceptance of a fee deficiency submission under 37 CFR 1.28. On September 1, 1998, the Court of Appeals for the Federal Circuit held that 37 CFR 1.28(c) is the sole provision governing the time for correction of the erroneous payment of the issue fee as a small entity. **See DH Technology v. Synergystex International, Inc. 154 F.3d 1333, 47 USPQ2d 1865 (Fed. Cir. Sept. 1, 1998).**

The Office no longer investigates or rejects original or reissue applications under 37 CFR 1.56. **1098 Off. Gaz. Pat. Office 502 (January 3, 1989).** Therefore, nothing in this Notice is intended to imply that an investigation was done.

Your fee deficiency submission under 37 CFR 1.28 is hereby **ACCEPTED**.

This file is being referred to Technology Center 2838 for examination, in due course.

Inquiries related to this communication should be directed to the undersigned at (571) 272-3226.

Andrea Smith
Petitions Examiner
Office of Petitions
Office of the Deputy Commissioner
for Patent Examination Policy

UNITED STATES PATENT AND TRADEMARK OFFICE

Commissioner for Patents
United States Patent and Trademark Office
P.O. Box 1450
Alexandria, VA 22313-1450
www.uspto.gov

FAY KAPLUN & MARCIN, LLP
150 BROADWAY, SUITE 702
NEW YORK NY 10038

MAILED

MAR 23 2010

OFFICE OF PETITIONS

In re Application of	:	
DAVIS, Steven et al.	:	
Application No. 10/811,093	:	DECISION ON PETITION
Filed: March 26, 2004	:	TO WITHDRAW
Attorney Docket No. **20114/00101**	:	FROM RECORD
	:	

This is a decision on the Request to Withdraw as attorney or agent of record under 37 C.F.R. § 1.36(b), filed March 09, 2010.

The request is **NOT APPROVED**.

A grantable request to withdraw as attorney/agent of record must be signed by every attorney/agent seeking to withdraw or contain a clear indication that one attorney is signing on behalf of another/others.

The request cannot be approved because the signature on the Request to Withdraw as attorney does not have an original signature. All correspondence filed in the Office should be an original document and must include an original signature. It appears that the top of the petition is original; however the bottom of the petition appears to have a copied signature, which is not permitted by the USPTO. Since the petition is half original and half copied it does not appear that an original could have been retained as set forth in 37 CFR 1.4 below.

§ 1.4 Nature of correspondence and signature requirements.

(d)(1)*Handwritten signature.* Each piece of correspondence, except as provided in paragraphs (d)(2), (d)(3), (e) and (f) of this section, filed in an application, patent file, or other proceeding in the Office which requires a person's signature, must:

(i)Be an original, that is, have an original handwritten signature personally signed, in permanent dark ink or its equivalent, by that person; or

(ii)Be a direct or indirect copy, such as a photocopy or facsimile transmission (§ 1.6(d)), of an original. In the event that a copy of the original is filed, the original should be retained as evidence of authenticity. If a question of authenticity arises, the Office may require submission of the original.

All future communications from the Office will continue to be directed to the above-listed address until otherwise notified by applicant.

Telephone inquiries concerning this decision should be directed to the undersigned at 571-272-4231.

Michelle R. Eason
Paralegal Specialist
Office of Petitions

UNITED STATES PATENT AND TRADEMARK OFFICE

Commissioner for Patents
United States Patent and Trademark Office
P.O. Box 1450
Alexandria, VA 22313-1450
www.uspto.gov

CURATOLO SIDOTI CO., LPA
24500 CENTER RIDGE ROAD, SUITE 280
CLEVELAND OH 44145

COPY MAILED

AUG 0 5 2008

OFFICE OF PETITIONS

In re Application of	:	
Dulzer et al.	:	
Application No. 10/811096	:	
Filing or 371(c) Date: 03/26/2004	:	
Attorney Docket Number:	:	
MBC-0518	:	ON PETITION

This is a decision on the "Petititon Requesting Withdrawal of a Holding of Abandonment Under 37 C.F.R. § 1.181," filed May 29, 2008.

This Petition is hereby **granted**.

The above-identified application became abandoned for failure to timely and properly reply to the non-final Office action, mailed October 12, 2007. The Office action set a three (3) month period for reply, and provided for extensions of time under 37 CFR 1.136(a). No response having been received, the application became abandoned on January 33, 2008. A Notice of Abandonment was mailed May 16, 2008.

Applicant files the present petition and asserts that a timely reply to the Office action, including a three (3) month extension of time request and fee, was filed electronically on April 12, 2008. In support of this assertion Applicant files a copy of their Electronic Acknowledgment Receipt, which acknowledges receipt by this Office of an Amendment, Extension of Time and Fee Worksheet on April 12, 2008.

A review of Office records also reveals that the Office received an Amendment, and three (3) month Extension of Time and Fee on April 12, 2008.

In view of the foregoing, the petition is granted. The holding of abandonment is hereby withdrawn.

No petition fee has been charged and none is due.

The application will be referred to Technology Center Art Unit 1793 for processing of the Reply, and for continued examination in due course.

Telephone inquiries concerning this matter should be directed to the undersigned at (571) 272-3232.

Derek L. Woods
Attorney
Office of Petitions

UNITED STATES PATENT AND TRADEMARK OFFICE

UNITED STATES DEPARTMENT OF COMMERCE
United States Patent and Trademark Office
Address: COMMISSIONER FOR PATENTS
P.O. Box 1450
Alexandria, Virginia 22313-1450
www.uspto.gov

APPLICATION NO.	FILING DATE	FIRST NAMED INVENTOR	ATTORNEY DOCKET NO.	CONFIRMATION NO.
10/811,161	03/26/2004	Manish Sinha	GP-303576	1978

65798 7590 12/16/2009
MILLER IP GROUP, PLC
GENERAL MOTORS CORPORATION
42690 WOODWARD AVENUE
SUITE 200
BLOOMFIELD HILLS, MI 48304

EXAMINER
WALKER, KEITH D

ART UNIT	PAPER NUMBER
1795	

MAIL DATE	DELIVERY MODE
12/16/2009	PAPER

Please find below and/or attached an Office communication concerning this application or proceeding.

The time period for reply, if any, is set in the attached communication.

UNITED STATES PATENT AND TRADEMARK OFFICE

Commissioner for Patents
United States Patent and Trademark Office
P.O. Box 1450
Alexandria, VA 22313-1450
www.uspto.gov

wk

12/16/09

In re application of
Sinha
Serial No. 10/811,161
Filed: Ma rch 26, 2004
For: Load following Algorithm For A Fuel Cell Based Distributed Generation System

DECISION ON PETITION

This is a request under 37 CFR 1.181 for review of reopening of prosecution after appeal.

On May 4, 2009, Applicant filed an Appeal Brief. The Examiner sent out an Office Action on September 8 ,2009 which did not include a signature from a Supervisory Patent Examiner as required by 37 CFR 1.198, authorizing reopening of prosecution.

DECISION

The Petition is **GRANTED**.

The Examiner is directed to either send out a new office action with a signature from a Supervisory Patent Examiner, reinstate the appeal or pass the application to issue.

/JACQUELINE STONE/

Jacqueline M. Stone, Director
Technology Center 1700
Chemical and Materials Engineering

John A. Miller
MILLER IP GROUP, PLC
GENERAL MOTORS CORPORATION
42690 WOODWARD AVENUE
SUITE 200
BLOOMFIELD HILLS MI 48304

UNITED STATES PATENT AND TRADEMARK OFFICE

Commissioner for Patents
United States Patent and Trademark Office
P.O. Box 1450
Alexandria, VA 22313-1450
www.uspto.gov

EUGENE L. FLANAGAN III
COWAN LIEBOWITZ & LATMAN, P.C.
1133 AVENUE OF THE AMERICAS
NEW YORK, NY 10036-6799

COPY MAILED

OCT 2 7 2005

OFFICE OF PETITIONS

In re Application of	:	
Ronald S. Kolessar et al	:	DECISION GRANTING
Application No. 10/811,174	:	PETITION
Filed: March 26, 2004	:	
Attorney Docket No. 03382-P0099A	:	

This is a decision on the petition under 37 CFR 1.10(d), filed July 7, 2005, requesting that the above-identified application be accorded a filing date of March 26, 2004, rather than the presently accorded filing date of March 25, 2004.

Petitioner requests the later filing date on the basis that the application was purportedly deposited with the U.S. Postal Service (USPS) as Express Mail on March 26, 2004, pursuant to the requirements of 37 CFR 1.10. The petition is accompanied by, inter alia, a copy of the Express Mail label, receipt No. EL889891135US. It is noted that the copy of the Express Mail receipt bears a handwritten "date-in" of March 25, 2004. Further, the petition is accompanied by a copy of the relevant page of the previous attorney's "Express Mail Logbook" with the following headings: SSJR File No., Express Mail No., Application No. (or "pending"), Date of Deposit, Time of Deposit, Place of Deposit, Time for Last Schld. Pickup, Signature of Depositor, Date of Logbook Entry, and Time of Logbook Entry. In further support, the petition is accompanied by a copy of the "U.S. Postal Service Track&Confirm email Restoration" information showing that the package in question, bearing the same Express Mail number found on the utility patent application transmittal was accepted and enroute on March 26, 2004.

In view of the above, the evidence is convincing that the application was deposited as "Express Mail" with the US Postal Service on March 26, 2004. Accordingly, the instant application is entitled to a filing date of March 26, 2004, and has been so accorded.

The petition is granted. No fee is required and none has been charged.

This matter is being referred to Technology Center AU 2161 for examination in due course.

Telephone inquires specific to this matter should be directed to Wan Laymon at (571) 271-3220.

Frances Hicks
Lead Petitions Examiner
Office of Petitions

UNITED STATES PATENT AND TRADEMARK OFFICE

Commissioner for Patents
United States Patent and Trademark Office
P.O. Box 1450
Alexandria, VA 22313-1450
www.uspto.gov

DEL S. CHRISTENSEN
SHELL OIL COMPANY
LEGAL-INTELLECTUAL PROPERTY
P.O. BOX 2463
HOUSTON TX 77252-2463

COPY MAILED

JAN 3 1 2005

OFFICE OF PETITIONS

In re Application of	:
Paul Thomas Huckabee	:
Application No. 10/811,211	: DECISION ON PETITION
Filed: March 26, 2004	: UNDER 37 CFR 1.78(a)(6)
Attorney Docket No. TH2037	:

This is a decision on the petition under 37 CFR 1.78(a)(6), filed October 15, 2004, to accept an unintentionally delayed claim under 35 U.S.C. §119(e) for the benefit of the prior-filed provisional application set forth in the concurrently filed amendment.

The petition is **DISMISSED AS MOOT**.

A petition for acceptance of a claim for late priority under 37 CFR 1.78(a)(6) is only applicable to those applications filed on or after November 29, 2000.

Along with the instant petition under 37 CFR §§ 1.78(a)(6), petitioner has submitted an amendment to the first sentence of the specification following the title to include a reference to the prior-filed provisional application.

The instant pending provisional application was filed on March 26, 2004, and was pending at the time of the filing of the instant petition. While a reference to the prior-filed provisional application was not included in an ADS or in the first sentence of the specification following the title, reference nevertheless was made in the transmittal letter and the declaration filed with the above identified application.

The current procedure where a claim for priority under 37 CFR §§ 1.78(a)(6) is not included in the first sentence of the specification or in an ADS but does appear either in the oath or declaration or a transmittal letter filed with the application and the Office notes the claim for priority, no petition will be required to accept a late claim for priority. This is because the application would have been scheduled for publication on the basis of the information concerning the claim submitted elsewhere in the application with the time period set forth in 37 CFR §§ 1.78(a)(5)(ii). However, on the other hand, if the USPTO does not note the claim for priority to the prior-filed application(s) set forth in

the oath or declaration or transmittal letter submitted with the application, a petition will be required to accept a late claim for priority under 37 CFR §§ 1.78(a)(6).[1] In the instant case, the Office noted the claim for priority of the prior-filed provisional application in the transmittal letter filed with the application, as shown by its inclusion on the filing receipt.

In vew of the above, the $130.00 petition fee submitted is unnecessary and will be refunded to petitioner's deposit account in due course.

Any questions concerning this decision on petition may be directed to Senior Petitions Attorney Patricia Faison-Ball at (571) 272-3212. All other inquiries concerning either the examination procedures or status of the application should be directed the Technology Center.

This matter is being referred to Technology Center Art Unit 3672 for appropriate action on the amendment filed October 15, 2004, including consideration by the examiner of applicant's entitlement to claim benefit of priority under 35 U.S.C. § 119(e) to the prior-filed provisional application.

Frances Hicks

Frances Hicks
Petitions Examiner
Office of Petitions
Office of the Deputy Commissioner
for Patent Examination Policy

---

[1] *Note* MPEP 201.11 (V), page 200-75 (Rev. 1. Feb. 2004 and 66 Federal Register 67087 at 67089 (Dec. 28, 2001), effective December 28, 2001.

UNITED STATES PATENT AND TRADEMARK OFFICE

Commissioner for Patents
United States Patent and Trademark Office
P.O. Box 1450
Alexandria, VA 22313-1450
www.uspto.gov

COPY MAILED

DEC 2 0 2007

OFFICE OF PETITIONS

Helen C. Lockhart
Wolf, Greenfield & Sacks, P.C.
600 Atlantic Avenue
Boston MA 02210

In re Application of	:
Wagner, et al.	: DECISION ON PETITION
Application No. 10/811,226	:
Filed: March 26, 2004	:
Atty. Dkt. No.: C1041.70005US01	:

The above-identified application has been forwarded to the Office of Petitions for consideration of the petition to withdraw the holding of abandonment under 37 CFR 1.181 filed November 13, 2007.

The petition under 37 CFR 1.181 to withdraw the holding of abandonment is hereby **DISMISSED**.

Any request for reconsideration of this decision must be submitted within **TWO (2) MONTHS** from mail date of this decision. Extensions of time under 37 CFR 1.136(a) are permitted. The reconsideration request should include a cover letter entitled "Renewed Petition under 37 CFR 1.181." This is not a final agency decision.

This application became abandoned July 12, 2004 for failure to timely submit a proper reply to the Notice of File Missing Parts of Nonprovisional Application (Notice) mailed April 11, 2004. The Notice set a two month shortened statutory period of time for reply. Notice of Abandonment was mailed September 13, 2007.

The Notice of Abandonment indicates that no response to the Notice was received. Petitioners allege that a reply was timely submitted May 25, 2004. Petitioners indicate a copy of the reply purportedly filed May 25, 2004 is included with the petition. The reply bears a certificate of mailing date of May 25, 2004, in accordance with 37 CFR 1.8. The copy of the reply submitted herewith does not appear to include the "Substitute CRF Sequence Listing Disk" referenced in the copy of the reply.

The record indicates that a reply was received May 27, 2004. The "Substitute CRF Sequence Listing Disk" referenced in the

transmittal letter does not appear in the official application file.

In accordance with 37 CFR 1.8(b)(2), petitioners must supply an additional copy of the previously mailed or transmitted correspondence and certificate. Petitioner's copy of the previously mailed reply is not complete, as it does not include the referenced disk.

Any renewed petition should be accompanied by a complete copy of the previously submitted reply.

Further correspondence with respect to this matter should be addressed as follows:

By mail: **Mail Stop Petition**
Commissioner for Patents
P.O. Box 1450
Alexandria, VA 22313-1450

By facsimile: (571) 273-8300

By hand delivery: U.S. Patent and Trademark Office
Customer Window, **Mail Stop Petition**
Randolph Building
401 Dulany Street
Alexandria, VA 22314

Telephone inquiries concerning this matter may be directed to the undersigned at (571) 272-3205.

Alesia M. Brown
Petitions Attorney
Office of Petitions

UNITED STATES PATENT AND TRADEMARK OFFICE

Commissioner for Patents
United States Patent and Trademark Office
P.O. Box 1450
Alexandria, VA 22313-1450
www.uspto.gov

Helen C. Lockhart
Wolf, Greenfield & Sacks, P.C.
600 Atlantic Avenue
Boston MA 02210

COPY MAILED

MAR 21 2008

OFFICE OF PETITIONS

In re Application of	:
Wagner, et al.	: DECISION ON PETITION
Application No. 10/811,226	:
Filed: March 26, 2004	:
Atty. Dkt. No.: C1041.70005US01	:

The above-identified application has been forwarded to the Office of Petitions for consideration of the renewed petition to withdraw the holding of abandonment under 37 CFR 1.181 filed January 14, 2008.

The petition under 37 CFR 1.181 to withdraw the holding of abandonment is hereby **GRANTED**.

The application was held abandoned for failure to timely submit a proper reply to the Notice to File Missing Parts mailed May 11, 2004. The Notice to File Missing Parts set a two month shortened statutory period of time for reply. No petition for extension of time was filed. Notice of Abandonment was mailed September 13, 2007. A petition under 37 CFR 1.181 was filed November 13, 2007 and dismissed December 20, 2007.

Petitioners assert that a response to the Notice to File Missing Parts was timely submitted May 25, 2004 and have provided as proof of mailing and proof a copy of the reply purportedly submitted. The copy of the reply bears a certificate of mailing date of May 25, 2004, in accordance with 37 CFR 1.8.

The original response submitted May 25, 2004 has not been located in the application file. However, in view of the fact that the reply contained a proper certificate of mailing in accordance with 37 CFR 1.8, the petition to withdraw the holding of abandonment is hereby **GRANTED**.

The Notice of Abandonment is hereby **VACATED** and the holding of abandonment is **WITHDRAWN**.

This application is being forwarded to the Office of Patent Application Processing for further processing.

Telephone inquiries concerning this matter may be directed to the undersigned at (571) 272-3205.

Alesia M. Brown
Petitions Attorney
Office of Petitions

UNITED STATES PATENT AND TRADEMARK OFFICE

Commissioner for Patents
United States Patent and Trademark Office
P.O. Box 1450
Alexandria, VA 22313-1450
www.uspto.gov

Cierra, Inc. &
Townsend and Townsend and Crew, LLP
Two Embarcadero Center
Eighth Floor
San Francisco, CA 94111-3834

COPY MAILED

JUL 0 7 2008

OFFICE OF PETITIONS

In re Application of	:	
Hanson Gifford, III et al.	:	
Application No. 10/811,228	:	DECISION ON PETITION
Filed: March 26, 2004	:	TO WITHDRAW
Attorney Docket No. 022128-000400US	:	FROM RECORD
	:	

This is a decision on the Request to Withdraw as attorney or agent under 37 C.F.R. § 1.36(b) or 37 C.F.R. § 10.40 filed May 16, 2008.

The request is **APPROVED**.

A grantable request to withdraw as attorney/agent of record must be signed by every attorney/agent seeking to withdraw or contain a clear indication that one attorney is signing on behalf of another/others. A request to withdraw will not be approved unless at least 30 (thirty) days would remain between the date of approval and the later of the expiration date of a time to file a response or the expiration date of the maximum time period which can be extended under 37 C.F.R. § 1.136(a).

The request to change the correspondence of record is not acceptable as the requested correspondence address is not that of (1) the first named signing inventor; or (2) an intervening assignee of the entire interest under 37 C.F.R. 3.71. Accordingly, all correspondence will be mailed to the assignee. A courtesy copy of this decision will be mailed to the address noted on the request to withdraw.

Applicant is reminded that there is no attorney of record at this time.

Telephone inquires concerning this decision should be directed to Kimberly Inabinet at 571-272-4618.

Kimberly Inabinet
Petitions Examiner
Office of Petitions

cc: Cierra, Inc.
199 Jefferson Drive
Menlo Park, CA 94025

cc: Takahiri, Miura, Oblon, Spivak
1940 Duke Street
Alexandria, VA 22314

UNITED STATES PATENT AND TRADEMARK OFFICE

UNITED STATES DEPARTMENT OF COMMERCE
United States Patent and Trademark Office
Address: COMMISSIONER FOR PATENTS
P.O. Box 1450
Alexandria, Virginia 22313-1450
www.uspto.gov

APPLICATION NUMBER	FILING OR 371(C) DATE	FIRST NAMED APPLICANT	ATTY. DOCKET NO./TITLE
10/811,228	03/26/2004	Hanson Gifford III	022128-000400US

CONFIRMATION NO. 9042

POWER OF ATTORNEY NOTICE

OC000000030817008

65689
CIERRA, INC. &
TOWNSEND & TOWNSEND AND CREW, LLP
TWO EMBARCADERO CENTER
EIGHTH FLOOR
SAN FRANCISCO, CA 94111-3834

Date Mailed: 07/07/2008

NOTICE REGARDING CHANGE OF POWER OF ATTORNEY

This is in response to the Power of Attorney filed 05/16/2008.

- The withdrawal as attorney in this application has been accepted. Future correspondence will be mailed to the new address of record. 37 CFR 1.33.

/kainabinet/

Office of Data Management, Application Assistance Unit (571) 272-4000, or (571) 272-4200, or 1-888-786-0101

UNITED STATES PATENT AND TRADEMARK OFFICE

Commissioner for Patents
United States Patent and Trademark Office
P.O. Box 1450
Alexandria, VA 22313-1450
www.uspto.gov

Patent No. :7323070
Ser. No. : 10811274
Inventor(s) :Masami UEDA et al.
Issued : 1/29/08
Title : MARAGING STEEL EXCELLENT IN FATIGUE CHARACTERISTICS AND METHOD FOR PRODUCING THE SAME
Docket No. :

Re: Request for Certificate of Correction

Consideration has been given your request for the issuance of a certificate of correction for the above-identified patent under the provisions of Rule(s) 1.322 and/or 1.323.

Assignees' names and addresses (assignment data) printed in a patent, are based *solely* on information supplied in the appropriate space for identifying the assignment data, i.e., item 3 of the Issue Fee Transmittal Form PTOL-85B. Granting of a request under 37 CFR 3.81(b) is required to correct applicant's error providing ***incorrect or erroneous*** assignment data, *before* issuance of a Certificate of Correction, under 37 CFR 1.323 *(see Manual of Patent Examining Procedures (M.P.E.P) Chp.1400, sect. 1481).* This procedure is required *at any time after the issue fee is paid*, including after issuance of the patent.

In view of the foregoing, your request, in this mater, is hereby denied.

A request to correct the Assignee under 37 CFR 3.81(b) should include:

A. **the processing fee set forth in 37 CFR 1.117(h) (currently $130);**
B. a statement that the failure to include the correct assignee name on the PTOL-85B was inadvertent; and
C. a copy of the Notice of Recordation of Assignment Document, reflecting the reel and frame number where the assignment(s) is recorded and/or reflecting proof of *the date* the assignment was submitted for recordation.

In the Request, Applicant(s) may request that the file be forwarded to Certificates of Correction Branch, for issuance of a Certificate of Correction, if the Request is granted.

Any request under 37 CFR 3.81(b) should be directed to the following address or facsimile number:

By mail: Mail Stop PETITIONS
Commissioner for Patents
Post Office Box 1450
Alexandria, VA 22313-1450

By hand: Customer Service Window
Mail Stop Petitions
Randolph Building
401 Dulany Street
Alexandria, VA 22314

By fax: (703) 872-9306
ATTN: Office of Petitions

If a fee (currently $100) was previously submitted for consideration of a Request for Certificate of Correction, under CFR 1.323, to correct assignment data,., no additional fee is required.

A certificate of correction will be issued to correct the remaining errors noted in your request.

Henry Randall
For Cecelia Newman
Decisions & Certificates
of Correction Branch
(703) 308-9390 Ext. 108

JORDAN AND HAMBURG
122 EAST 42ND STREET
NEW YORK, NEW YORK 10168

HR

UNITED STATES PATENT AND TRADEMARK OFFICE

Commissioner for Patents
United States Patent and Trademark Office
P.O. Box 1450
Alexandria, VA 22313-1450
www.uspto.gov

JORDAN AND HAMBURG, LLP
122 EAST 42ND STREET
SUITE 4000
NEW YORK, NY 10168

COPY MAILED
NOV 19 2008

In re Patent No. 7,323,070	:	
Issue Date: January 29, 2008	:	
Application No. 10/811,274	:	ON PETITION
Filed: March 26, 2004	:	
Patentee(s): Masami Ueda, et. al.	:	

This is a decision on the request under 37 CFR 3.81[1] filed September 2, 2008, to add the name of an assignee on the front page of the above-identified patent by way of a Certificate of Correction.

The request is **GRANTED**.

The Certificates of Correction Branch will be notified of this decision granting the petition under 37 CFR 3.81(b) and directing issuance of the requested Certificate of Correction.

Telephone inquiries concerning this decision may be directed to the undersigned at (571) 272-3226. Inquiries regarding the issuance of a Certificate of Correction should be directed to the Certificates of Correction Branch at (703) 305-8309.

Andrea Smith
Petitions Examiner
Office of Petitions

[1] *See Official Gazette of June 22, 2004*

UNITED STATES PATENT AND TRADEMARK OFFICE

Commissioner for Patents
United States Patent and Trademark Office
P.O. Box 1450
Alexandria, VA 22313-1450
www.uspto.gov

CROMPTON, SEAGER & TUFTE, LLC
1221 NICOLLET AVENUE
SUITE 800
MINNEAPOLIS, MN 55403-2420

COPY MAILED

OCT 0 6 2004

OFFICE OF PETITIONS

In re Application of :
Gohl, et al. :
Application No. 10/811,276 : ON PETITION
Filed: March 25, 2004 :
Attorney Docket No. 1149.1104101 :

This is a decision on the petition filed July 22, 2004, requesting that the above-identified application be accorded a filing date of March 25, 2004.

The application was deposited on March 25, 2004. However, on June 8, 2004, the Office of Initial Patent Examination (OIPE) mailed a "Notice of Incomplete Nonprovisional Application" which stated a filing date was not accorded and that the application was deposited without drawings.

In response, on July 22, 2004, the instant petition was filed.

Petitioner states, "Applicant hereby petitions under 37 § 1.53(e), for the reasons set forth below for review of the determination that drawings are necessary. ... The claims are directed to compositions and methods. The missing drawings were all graphs of data provided within the tables in the Example section. Thus, the drawings only provided a graphical representation of the test data present in the application as filed on March 25, 2004. Therefore Applicant asserts that drawings are not necessary under 35 U.S.C. § 113, and that the Applicant is entitled to the March 25, 2004 filing date."

It is noted that the petition contains statements that drawings are not necessary and the petition is signed by a registered practitioner.

Furthermore, it is confirmed that the nonprovisional application contains a process claim that includes the term "method" in it's introductory phrase and therefore drawings are not required.

MPEP 608.02 states:

> "An OIPE formality examiner should not treat an application without drawings as incomplete if drawings are not required. A drawing is not required for a filing date under 35 U.S.C. 111 and 113 if the application contains:
>
> > (A) at least one process claim including the term "process" or "method" in its introductory phrase;

Since the claims contain at least one process claim including the term "process" or "method" in its introductory phrase, drawings are not required in order to accord a filing date.

Accordingly, the petition is granted.

As the instant petition was required to accord the requested filing date, the petition fee will not be refunded.

The application will be returned to the Office of Initial Patent Examination for processing with a filing date of March 25, 2004, with zero (0) drawings received on that date.

Telephone inquiries concerning this matter may be directed to the undersigned at (571)272-3228.

Edward J. Tannouse
Petitions Attorney
Office of Petitions
United States Patent and Trademark Office

UNITED STATES PATENT AND TRADEMARK OFFICE

Commissioner for Patents
United States Patent and Trademark Office
P.O. Box 1450
Alexandria, VA 22313-1450
www.uspto.gov

DARBY & DARBY P.C.
P.O. BOX 5257
NEW YORK, NY 10150-5257

COPY MAILED

FEB 2 2 2006

OFFICE OF PETITIONS

In re Patent No. 6,960,645 :
Issue Date: November 1, 2005 :
Application No. 10/811,294 :
Filed: March 26, 2004 :
Patentee: Kala Ramakrishnan, et al. :

ON PETITION

This is a notice regarding your request for acceptance of a fee deficiency submission under 37 CFR 1.28. On September 1, 1998, the Court of Appeals for the Federal Circuit held that 37 CFR 1.28(c) is the sole provision governing the time for correction of the erroneous payment of the issue fee as a small entity. **See DH Technology v. Synergystex International, Inc. 154 F.3d 1333, 47 USPQ2d 1865 (Fed. Cir. Sept. 1, 1998).**

The Office no longer investigates or rejects original or reissue applications under 37 CFR 1.56. **1098 Off. Gaz. Pat. Office 502 (January 3, 1989)**. Therefore, nothing in this Notice is intended to imply that an investigation was done.

Your fee deficiency submission under 37 CFR 1.28 is hereby **ACCEPTED**.

This application is no longer entitled to small entity status. Accordingly, all future fees paid in this application must be paid at the large entity rate.

Telephone inquiries concerning this decision should be directed to the undersigned at (571) 272-3229.

Retta Williams

Retta Williams
Petitions Examiner
Office of Petitions

UNITED STATES PATENT AND TRADEMARK OFFICE

Commissioner for Patents
United States Patent and Trademark Office
P.O. Box 1450
Alexandria, VA 22313-1450
www.uspto.gov

DARBY & DARBY P.C.
P.O. BOX 5257
NEW YORK, NY 10150-5257

COPY MAILED

FEB 2 2 2006

OFFICE OF PETITIONS

In re Patent No. 6,962,945 :
Issue Date: November 8, 2005 :
Application No. 10/811,296 : ON PETITION
Filed: March 26, 2004 :
Patentee: Kalpana Bhandari, et al. :

This is a notice regarding your request for acceptance of a fee deficiency submission under 37 CFR 1.28. On September 1, 1998, the Court of Appeals for the Federal Circuit held that 37 CFR 1.28(c) is the sole provision governing the time for correction of the erroneous payment of the issue fee as a small entity. **See DH Technology v. Synergystex International, Inc. 154 F.3d 1333, 47 USPQ2d 1865 (Fed. Cir. Sept. 1, 1998).**

The Office no longer investigates or rejects original or reissue applications under 37 CFR 1.56. **1098 Off. Gaz. Pat. Office 502 (January 3, 1989)**. Therefore, nothing in this Notice is intended to imply that an investigation was done.

Your fee deficiency submission under 37 CFR 1.28 is hereby **ACCEPTED**.

This application is no longer entitled to small entity status. Accordingly, all future fees paid in this application must be paid at the large entity rate.

Telephone inquiries concerning this decision should be directed to the undersigned at (571) 272-3229.

Retta Williams

Retta Williams
Petitions Examiner
Office of Petitions

UNITED STATES PATENT AND TRADEMARK OFFICE

UNITED STATES DEPARTMENT OF COMMERCE
United States Patent and Trademark Office
Address: COMMISSIONER FOR PATENTS
P.O. Box 1450
Alexandria, Virginia 22313-1450
www.uspto.gov

K&L GATES LLP
210 SIXTH AVENUE
PITTSBURGH, PA 15222-2613

Mail Date: 04/21/2010

Applicant	: Daniel P. Curry	: DECISION ON REQUEST FOR
Patent Number	: 7606749	: RECALCULATION of PATENT
Issue Date	: 10/20/2009	: TERM ADJUSTMENT IN VIEW
Appliction No	: 10/811,318	: OF WYETH AND NOTICE OF INTENT TO
Filed	: 03/26/2004	: ISSUE CERTIFICATE OF CORRECTION
		:

The Request for Recalculation is **GRANTED** to the extent indicated.

The patent term adjustment has been determined to be **1315** days. The USPTO will *sua sponte* issue a certificate of correction reflecting the amount of PTA days determined by the recalculation.

Prior to the issuance of the certificate of correction, the USPTO will afford patentee an opportunity to be heard and request reconsideration. Accordingly, patentee has **one month or thirty (30) days**, whichever is longer, to file a request for reconsideration of this patent term adjustment calculation. See 35 U.S.C. 154(b)(3)(B)(ii) and 37 CFR 1.322(a)(4). No extensions of time will be granted under 37 CFR 1.136.

Patentee should use document code PET.OP if electronically filing a request for reconsideration of this patent term adjustment calculation. The patentee must also include the information required by 37 CFR 1.705(b)(2) and the fee required by 37 CFR 1.18(e). If patentee does not file a timely request for reconsideration of this patent term adjustment calculation including the information required by 37 CFR 1.705(b)(2) and the fee required by 37 CFR 1.18(e), the USPTO will issue a certificate of correction reflecting the PTA determination noted above.

Patentee should be aware that in order to preserve the right to review in the United States District Court for the District of Columbia of the USPTO patent term adjustment determination, patentee must ensure that he or she also take the steps required under 35 U.S.C. 154(b)(4)(A) in a timely manner. Nothing in the request for recalculation should be construed as providing an alternative time frame for commencing a civil action under 35 U.S.C. 154(b)(4)(A).

Any questions concerning this decision should be directed to the Office of Patent Legal Administration at 571-272-7702.

UNITED STATES PATENT AND TRADEMARK OFFICE

Commissioner for Patents
United States Patent and Trademark Office
P.O. Box 1450
Alexandria, VA 22313-1450
www.uspto.gov

Bachand Law Office
P.O. Box 54244
Phoenix, AZ 85078

MAILED

MAR 3 1 2009

OFFICE OF PETITIONS

In re Application of
Mark A. Hartenstein et al.
Application No. 10/811,327
Filed: March 25, 2004
Attorney Docket No. 12.02

CORRECTED DECISION ON PETITION TO WITHDRAW FROM RECORD

This is a corrected decision on the Request to Withdraw as attorney or agent of record under 37 C.F.R. § 1.36(b), filed March 8, 2009.

The request is **APPROVED**.

A grantable request to withdraw as attorney/agent of record must be signed by every attorney/agent seeking to withdraw or contain a clear indication that one attorney is signing on behalf of another/others. A request to withdraw will not be approved unless at least 30 (thirty) days would remain between the date of approval and the later of the expiration date of a time to file a response or the expiration date of the maximum time period which can be extended under 37 C.F.R. § 1.136(a).

The request was signed by William R. Bachand on behalf of all attorneys/agents of record. All attorneys/agents have been withdrawn.

Applicant is reminded that there is no attorney of record at this time.

The correspondence address has been changed and is copied below.

Application No. 10/811,327

Telephone inquiries concerning this decision should be directed to Kimberly Inabinet at 571-272-4618.

Kimberly Inabinet
Petitions Examiner
Office of Petitions

cc: Mark Hartenstein
601 Beacon Street
Boise, ID 83706

UNITED STATES PATENT AND TRADEMARK OFFICE

UNITED STATES DEPARTMENT OF COMMERCE
United States Patent and Trademark Office
Address: COMMISSIONER FOR PATENTS
P.O. Box 1450
Alexandria, Virginia 22313-1450
www.uspto.gov

APPLICATION NUMBER	FILING OR 371(C) DATE	FIRST NAMED APPLICANT	ATTY. DOCKET NO./TITLE
10/811,327	03/25/2004	Mark A. Hartenstein	12.02

CONFIRMATION NO. 1373

POWER OF ATTORNEY NOTICE

70624
Bachand Law Office
P.O. Box 54244
Phoenix, AZ 85078

OC000000035120504

Date Mailed: 03/23/2009

NOTICE REGARDING CHANGE OF POWER OF ATTORNEY

This is in response to the Power of Attorney filed 03/08/2009.

- The withdrawal as attorney in this application has been accepted. Future correspondence will be mailed to the new address of record. 37 CFR 1.33.

/kainabinet/

Office of Data Management, Application Assistance Unit (571) 272-4000, or (571) 272-4200, or 1-888-786-0101

UNITED STATES PATENT AND TRADEMARK OFFICE

Commissioner for Patents
United States Patent and Trademark Office
P.O. Box 1450
Alexandria, VA 22313-1450
www.uspto.gov

THE BRILL LAW OFFICE
2900 GORDON AVENUE
SUITE 100-38
SANTA CLARA CA 95051

MAILED

APR 13 2010

OFFICE OF PETITIONS

In re Application of	:	
Mark A. HARTENSTEIN, et al	:	
Application No. 10/811,327	:	DECISION ON PETITION
Filed: March 25, 2004	:	
Attorney Docket No. HART0001	:	

This is a decision on the petition under the unintentional provisions of 37 CFR 1.137(b), filed January 12, 2010, to revive the above-identified application.

The petition is **GRANTED**.

The application became abandoned for failure to timely pay the issue and publication fees on or before May 11, 2009, as required by the Notice of Allowance and Fee(s) Due, mailed February 10, 2009, which set a statutory period for reply of three (3) months. Accordingly, the application became abandoned on May 12, 2009.

The petition satisfies the requirements of 37 CFR 1.137(b) in that petitioner has supplied (1) the reply in the form of payment of the issue fee of $755 and publication fee of $300; (2) the petition fee of $810; and (3) the required statement of unintentional delay.

It is not apparent whether the person signing the statement of unintentional delay was in a position to have firsthand or direct knowledge of the facts and circumstances of the delay at issue. Nevertheless, such statement is being treated as having been made as the result of a reasonable inquiry into the facts and circumstances of such delay. See 37 CFR 10.18(b) and Changes to Patent Practice and Procedure; Final Rule Notice, 62 Fed. Reg. 53131, 53178 (October 10, 1997), 1203 Off. Gaz. Pat. Office 63, 103 (October 21, 1997). In the event that such an inquiry has not been made, petitioner must make such an inquiry. If such inquiry results in the discovery that it is not correct that the entire delay in filing the required reply from the due date for the reply until the filing of a grantable petition pursuant to 37 CFR 1.137(b) was unintentional, petitioner must notify the Office.

The Terminal Disclaimer filed with the petition dated January 12, 2010, was acknowledged, however, is unnecessary because the application is not a design application nor was it filed before June 8, 1995. See MPEP 1.137(d).

Telephone inquiries concerning this decision should be directed to the undersigned at (571) 272-6735.

The application is being referred to the Office of Data Management for processing into a patent.

/DCG/
Diane C. Goodwyn
Petitions Examiner
Office of Petitions

UNITED STATES PATENT AND TRADEMARK OFFICE

Commissioner for Patents
United States Patent and Trademark Office
P.O. Box 1450
Alexandria, VA 22313-1450
www.uspto.gov

Don W. Bulson
RENNER, OTTO, BOISSELLE & SKLAR, LLP
Nineteenth Floor
1621 Euclid Avenue
Cleveland OH 44115-2191

MAILED

MAR 2 9 2010

OFFICE OF PETITIONS

In re Application of
Vilsmeier et al.
Application No. 10/811,330
Filed: March 26, 2004
Attorney Docket No. SCHWP0187USA

DECISION ON PETITION
UNDER 37 CFR 1.78(a)(3)

This is a decision on the petition under 37 CFR 1.78(a)(3), filed February 26, 2010, to accept an unintentionally delayed claim under 35 U.S.C. § 120 for the benefit of priority to the prior-filed nonprovisional application set forth in the amendment filed with the petition.

The petition is **DISMISSED**.

A petition for acceptance of a claim for late priority under 37 CFR 1.78(a)(3) is only applicable to those applications filed on or after November 29, 2000. Further, the petition is appropriate only after the expiration of the period specified in 37 CFR 1.78(a)(2)(ii). In addition, the petition under 37 CFR 1.78(a)(3) must be accompanied by:

(1) the reference required by 35 U.S.C. § 120 and 37 CFR 1.78(a)(2)(i) of the prior-filed application, unless previously submitted;
(2) the surcharge set forth in § 1.17(t); and
(3) a statement that the entire delay between the date the claim was due under 37 CFR 1.78(a)(2)(ii) and the date the claim was filed was unintentional. The Director may require additional information where there is a question whether the delay was unintentional.

The petition does not satisfy item (1) above.

The reference to add the prior-filed application in the first sentence of the specification on page one following the title is not acceptable as drafted since it improperly incorporates by reference the prior-filed application. An incorporation by reference statement added after an application's filing date is not effective because no new matter can be added to an application after its filing date (*see* 35 U.S.C. § 132(a)). If an incorporation by reference statement is included in an amendment to the specification to add a benefit claim under 35 U.S.C. § 120 after the filing date of the application, the amendment would not be proper.

When a benefit claim under 35 U.S.C. § 120 is submitted after the filing of an application, the reference to the prior application cannot include an incorporation by reference statement of the prior application. *See* Dart Industries v. Banner, 636 F.2d 684, 207 USPQ 273 (C.A.D.C. 1980). *Note* MPEP §§ 201.06(c) and 608.04(b).

If reconsideration of this decision is desired, a renewed petition under 37 CFR § 1.78(a)(3) and an Application Data Sheet or an amendment (complying with the provisions of 37 CFR 1.121 and 37 CFR 1.76(b)(5)) to correct the above matter are required.

Further correspondence with respect to this matter should be addressed as follows:

By mail: Mail Stop PETITIONS
Commissioner for Patents
Post Office Box 1450
Alexandria, VA 22313-1450

By hand: Customer Service Window
Mail Stop Petitions
Randolph Building
401 Dulany Street
Alexandria, VA 22314

By fax: (571) 273-8300
ATTN: Office of Petitions

Any questions concerning this matter may be directed to the undersigned at (571) 272-3230.

Shirene Willis Brantley

Shirene Willis Brantley
Senior Petitions Attorney
Office of Petitions

UNITED STATES PATENT AND TRADEMARK OFFICE

Commissioner for Patents
United States Patent and Trademark Office
P.O. Box 1450
Alexandria, VA 22313-1450
www.uspto.gov

Don W. Bulson
RENNER, OTTO, BOISSELLE & SKLAR, LLP
Nineteenth Floor
1621 Euclid Avenue
Cleveland OH 44115-2191

MAILED

MAY 21 2010

OFFICE OF PETITIONS

In re Application of
Vilsmeier et al.
Application No. 10/811,330
Filed: March 26, 2004
Attorney Docket No. SCHWP0187USA

DECISION ON PETITION
UNDER 37 CFR 1.78(a)(3)

This is a decision on the renewed petition under 37 CFR 1.78(a)(3), filed April 8, 2010, to accept an unintentionally delayed claim under 35 U.S.C. § 120 for the benefit of priority to the prior-filed nonprovisional application set forth in the amendment filed with the petition.

The petition is **GRANTED**.

A petition for acceptance of a claim for late priority under 37 CFR 1.78(a)(3) is only applicable to those applications filed on or after November 29, 2000. Further, the petition is appropriate only after the expiration of the period specified in 37 CFR 1.78(a)(2)(ii). In addition, the petition under 37 CFR 1.78(a)(3) must be accompanied by:

(1) the reference required by 35 U.S.C. § 120 and 37 CFR 1.78(a)(2)(i) of the prior-filed application, unless previously submitted;
(2) the surcharge set forth in § 1.17(t); and
(3) a statement that the entire delay between the date the claim was due under 37 CFR 1.78(a)(2)(ii) and the date the claim was filed was unintentional. The Director may require additional information where there is a question whether the delay was unintentional.

All of the above requirements having been satisfied, the late claim for priority under 35 U.S.C. § 120 is accepted as being unintentionally delayed.

The granting of the petition to accept the delayed benefit claim to the prior-filed application under 37 CFR 1.78(a)(3) should not be construed as meaning that this application is entitled to the benefit of the prior-filed application. In order for this application to be entitled to the benefit of the prior-filed application, all other requirements under 35 U.S.C. § 120 and 37 CFR 1.78(a)(1) and (a)(2) must be met. Similarly, the fact that the corrected Filing Receipt accompanying this decision on petition includes the prior-filed application should not be

construed as meaning that applicants are entitled to the claim for benefit of priority to the prior-filed application noted thereon. Accordingly, the examiner will, in due course, consider this benefit claim and determine whether the application is entitled to the benefit of the earlier filing date.

A corrected Filing Receipt, which includes the priority claim to the prior-filed nonprovisional application, accompanies this decision on petition.

Any inquiries concerning this decision may be directed to the undersigned at (571) 272-3230. All other inquiries concerning either the examination procedures or status of the application should be directed to the Technology Center.

This application is being forwarded to Technology Center Art Unit 3768 for consideration by the examiner of applicants' entitlement to claim benefit of priority under 35 U.S.C. § 120 to the prior-filed application.

Shirene Willis Brantley
Senior Petitions Attorney
Office of Petitions

ATTACHMENT: Corrected Filing Receipt

UNITED STATES PATENT AND TRADEMARK OFFICE

UNITED STATES DEPARTMENT OF COMMERCE
United States Patent and Trademark Office
Address: COMMISSIONER FOR PATENTS
P.O. Box 1450
Alexandria, Virginia 22313-1450
www.uspto.gov

APPLICATION NUMBER	FILING or 371(c) DATE	GRP ART UNIT	FIL FEE REC'D	ATTY.DOCKET.NO	TOT CLAIMS	IND CLAIMS
10/811,330	03/26/2004	3768	1000	SCHWP0187USA	20	2

CONFIRMATION NO. 1366

CORRECTED FILING RECEIPT

Don W. Bulson
RENNER, OTTO, BOISSELLE & SKLAR, LLP
Nineteenth Floor
1621 Euclid Avenue
Cleveland, OH 44115-2191

OC000000041615099

Date Mailed: 05/13/2010

Receipt is acknowledged of this non-provisional patent application. The application will be taken up for examination in due course. Applicant will be notified as to the results of the examination. Any correspondence concerning the application must include the following identification information: the U.S. APPLICATION NUMBER, FILING DATE, NAME OF APPLICANT, and TITLE OF INVENTION. Fees transmitted by check or draft are subject to collection. Please verify the accuracy of the data presented on this receipt. **If an error is noted on this Filing Receipt, please submit a written request for a Filing Receipt Correction. Please provide a copy of this Filing Receipt with the changes noted thereon. If you received a "Notice to File Missing Parts" for this application, please submit any corrections to this Filing Receipt with your reply to the Notice. When the USPTO processes the reply to the Notice, the USPTO will generate another Filing Receipt incorporating the requested corrections**

Applicant(s)

Stefan Vilsmeier, Kufstein, AUSTRIA;
Mario Zeiss, Tokyo, JAPAN;
Claus Schaffrath, Munchen, GERMANY;
Thomas Feilkas, Grafing, GERMANY;

Power of Attorney:
Armand Boisselle Sr--22381
Warren Sklar--26373
Don Bulson--28192

Domestic Priority data as claimed by applicant

This appln claims benefit of 60/494,935 08/13/2003
and is a CIP of 10/133,867 04/26/2002 PAT 7,194,295

Foreign Applications
EUROPEAN PATENT OFFICE (EPO) 03 006 782.1 03/26/2003

If Required, Foreign Filing License Granted: 06/18/2004

The country code and number of your priority application, to be used for filing abroad under the Paris Convention, is **US 10/811,330**

Projected Publication Date: Not Applicable

Non-Publication Request: No

Early Publication Request: No

Title

Planning and navigation assistance using two-dimensionally adapted generic and detected patient data

Preliminary Class

600

PROTECTING YOUR INVENTION OUTSIDE THE UNITED STATES

Since the rights granted by a U.S. patent extend only throughout the territory of the United States and have no effect in a foreign country, an inventor who wishes patent protection in another country must apply for a patent in a specific country or in regional patent offices. Applicants may wish to consider the filing of an international application under the Patent Cooperation Treaty (PCT). An international (PCT) application generally has the same effect as a regular national patent application in each PCT-member country. The PCT process **simplifies** the filing of patent applications on the same invention in member countries, but **does not result** in a grant of "an international patent" and does not eliminate the need of applicants to file additional documents and fees in countries where patent protection is desired.

Almost every country has its own patent law, and a person desiring a patent in a particular country must make an application for patent in that country in accordance with its particular laws. Since the laws of many countries differ in various respects from the patent law of the United States, applicants are advised to seek guidance from specific foreign countries to ensure that patent rights are not lost prematurely.

Applicants also are advised that in the case of inventions made in the United States, the Director of the USPTO must issue a license before applicants can apply for a patent in a foreign country. The filing of a U.S. patent application serves as a request for a foreign filing license. The application's filing receipt contains further information and guidance as to the status of applicant's license for foreign filing.

Applicants may wish to consult the USPTO booklet, "General Information Concerning Patents" (specifically, the section entitled "Treaties and Foreign Patents") for more information on timeframes and deadlines for filing foreign patent applications. The guide is available either by contacting the USPTO Contact Center at 800-786-9199, or it can be viewed on the USPTO website at http://www.uspto.gov/web/offices/pac/doc/general/index.html.

For information on preventing theft of your intellectual property (patents, trademarks and copyrights), you may wish to consult the U.S. Government website, http://www.stopfakes.gov. Part of a Department of Commerce initiative, this website includes self-help "toolkits" giving innovators guidance on how to protect intellectual property in specific countries such as China, Korea and Mexico. For questions regarding patent enforcement issues, applicants may call the U.S. Government hotline at 1-866-999-HALT (1-866-999-4158).

LICENSE FOR FOREIGN FILING UNDER

Title 35, United States Code, Section 184

Title 37, Code of Federal Regulations, 5.11 & 5.15

GRANTED

The applicant has been granted a license under 35 U.S.C. 184, if the phrase "IF REQUIRED, FOREIGN FILING LICENSE GRANTED" followed by a date appears on this form. Such licenses are issued in all applications where

the conditions for issuance of a license have been met, regardless of whether or not a license may be required as set forth in 37 CFR 5.15. The scope and limitations of this license are set forth in 37 CFR 5.15(a) unless an earlier license has been issued under 37 CFR 5.15(b). The license is subject to revocation upon written notification. The date indicated is the effective date of the license, unless an earlier license of similar scope has been granted under 37 CFR 5.13 or 5.14.

This license is to be retained by the licensee and may be used at any time on or after the effective date thereof unless it is revoked. This license is automatically transferred to any related applications(s) filed under 37 CFR 1.53(d). This license is not retroactive.

The grant of a license does not in any way lessen the responsibility of a licensee for the security of the subject matter as imposed by any Government contract or the provisions of existing laws relating to espionage and the national security or the export of technical data. Licensees should apprise themselves of current regulations especially with respect to certain countries, of other agencies, particularly the Office of Defense Trade Controls, Department of State (with respect to Arms, Munitions and Implements of War (22 CFR 121-128)); the Bureau of Industry and Security, Department of Commerce (15 CFR parts 730-774); the Office of Foreign AssetsControl, Department of Treasury (31 CFR Parts 500+) and the Department of Energy.

NOT GRANTED

No license under 35 U.S.C. 184 has been granted at this time, if the phrase "IF REQUIRED, FOREIGN FILING LICENSE GRANTED" DOES NOT appear on this form. Applicant may still petition for a license under 37 CFR 5.12, if a license is desired before the expiration of 6 months from the filing date of the application. If 6 months has lapsed from the filing date of this application and the licensee has not received any indication of a secrecy order under 35 U.S.C. 181, the licensee may foreign file the application pursuant to 37 CFR 5.15(b).

UNITED STATES PATENT AND TRADEMARK OFFICE

Commissioner for Patents
United States Patent and Trademark Office
P.O. Box 1450
Alexandria, VA 22313-1450
www.uspto.gov

COPY MAILED

JUL 30 2007

OFFICE OF PETITIONS

GARY L. EASTMAN
EASTMAN & ASSOCIATES
707 BROADWAY STREET, SUITE 1800
SAN DIEGO CA 92101

In re Application of	:	
Alise Shatoff et al	:	
Application No. 10/811,340	:	ON PETITION
Filed: March 25, 2004	:	
Attorney Docket No. 1351-PA01	:	

This is a decision on the petition under 37 CFR 1.137(b), filed March 8, 2007, to revive the above-identified application.

The petition is **GRANTED**.

The petition satisfies the conditions for revival pursuant to the provisions of 37 CFR 1.137(b) in that (1) the reply in the form of an amendment; (2) the petition fee; and (3) the required statement of unintentional delay have been received. Accordingly, the reply to the Restriction Requirement of November 2, 2004, is accepted as having been unintentionally delayed.

The above-identified application has been abandoned for an extended period of time. The Patent and Trademark Office is relying on petitioner's duty of candor and good faith and accepting the statement that the entire delay in filing the required reply from the due date for the reply until the filing of a grantable petition pursuant to 37 CFR 1.137(b) was unintentional. See Changes to Patent Practice and Procedure, 62 Fed. Reg. at 53160 and 53178; 1203 Off. Gaz. Pat. Office at 88 and 103 (responses to comments 64 and 109) (applicant obligated under 37 CFR 10.18 to inquire into the underlying facts and circumstances when providing the statement required by 37 CFR 1.137(b) to the Patent and Trademark Office).

Telephone inquiries concerning this decision should be directed to the undersigned at (571) 272-3208.

This matter is being referred to Technology Center AU 3643.

Karen Creasy

Karen Creasy
Petitions Examiner
Office of Petitions

UNITED STATES PATENT AND TRADEMARK OFFICE

Commissioner for Patents
United States Patent and Trademark Office
P.O. Box 1450
Alexandria, VA 22313-1450
www.uspto.gov

LANXESS CORPORATION
111 RIDC PARK WEST DRIVE
PITTSBURGH, PA 15275-1112

COPY MAILED

FEB 08 2007

OFFICE OF PETITIONS

In re Application of	:	
Andreas Steinert et al	:	
Application No. 10/811,349	:	ON PETITION
Filed: March 26, 2004	:	
Attorney Docket No. Mo-7105D/BOR-4	:	

This is a decision on the petition under 37 CFR 1.137(b), filed October 12, 2006, to revive the above-identified application.

The petition is **GRANTED**.

The above-identified application became abandoned for failure to reply in a timely manner to the non-final Office action mailed March 1, 2006, which set a shortened statutory period for reply of three (3) months. Two-month extensions of time under the provisions of 37 CFR 1.136(a) were obtained. Accordingly, the above-identified application became abandoned on August 2, 2006.

Telephone inquiries concerning this decision should be directed to Irvin Dingle at (571) 272-3210.

This matter is being referred to Technology Center AU 1714 for further processing.

Irvin Dingle
Petitions Examiner
Office of Petitions

UNITED STATES PATENT AND TRADEMARK OFFICE

Commissioner for Patents
United States Patent and Trademark Office
P.O. Box 1450
Alexandria, VA 22313-1450
www.uspto.gov

COPY MAILED
SEP 28 2006
OFFICE OF PETITIONS

OPPENHEIMER WOLFF & DONNELLY, LLP (ACCENTURE)
PLAZA VII, SUITE 3300
45 SOUTH SEVENTH STREET
MINNEAPOLIS MN 55402-1609

In re Application of	:	
Quiring et al.	:	
Application No. 10/811,367	:	ON PETITION
Filed: March 26, 2004	:	
Attorney Docket No. 60021-379801	:	

This is a decision on the petition under 37 CFR 1.137(b), filed August 21, 2006, to revive the instant nonprovisional application for failure to timely notify the U.S. Patent and Trademark (USPTO) of the filing of an application in a foreign country, or under a multinational treaty that requires publication of applications eighteen months after filing. *See* 37 CFR 1.137(f).

The petition is **DISMISSED.**

Any request for reconsideration of this decision must be submitted within TWO (2) MONTHS from the mail date of this decision. Extensions of time under 37 CFR 1.136(a) are permitted. The reconsideration request should include a cover letter entitled "Renewed Petition under 37 CFR 1.137(b)."

Petitioner states that the present nonprovisional application is the subject of an application filed in an eighteen-month publication country. Petitioner indicates that the USPTO was unintentionally not notified of this filing within 45 days subsequent to the filing of the subject application in an eighteen-month publication country.

A petition to revive an application abandoned pursuant to
35 U.S.C. 122(b)(2)(B)(iii) for failure to notify the USPTO of a foreign filing must be accompanied by:

(1) the required reply, which is met by the notification of such filing in a foreign country or under a multinational treaty;
(2) the petition fee as set forth in 37 CFR 1.17(m); and,
(3) a statement that the entire delay in filing the required reply from the due date of the reply until the filing of a grantable petition was unintentional.

The present petition lacks item (1). In the present petition, petitioner did not indicate the filing date of the subsequently filed foreign or international application. The Office is unable to evaluate the petition on its merits without petitioner providing the correct filing date of the foreign or international application. This information must be provided with any renewed petition. Accordingly, the present application remains abandoned.

Further correspondence with respect to this matter should be addressed as follows:

By mail: Mail Stop Petition
Commissioner for Patents
P.O. Box 1450
Alexandria, VA 22313-1450

By FAX: (571) 273-8300

By hand: Customer Service Window
Randolph Building
401 Dulany Street
Alexandria, VA 22314

Telephone inquiries regarding this decision should be directed to the undersigned at (571) 272-3215.

Charlema R Grant

Charlema R. Grant
Petitions Attorney
Office of Petitions

UNITED STATES PATENT AND TRADEMARK OFFICE

Commissioner for Patents
United States Patent and Trademark Office
P.O. Box 1450
Alexandria, VA 22313-1450
www.uspto.gov

COPY MAILED

JAN 0 4 2007

OFFICE OF PETITIONS

OPPENHEIMER WOLFF & DONNELLY, LLP
PLAZA VII, SUITE 3300
45 SOUTH SEVENTH STREET
MINNEAPOLIS MN 55402-1609

In re Application of	:	
Quiring et al.	:	
Application No. 10/811,367	:	DECISION ON PETITION
Filed: March 26, 2004	:	UNDER 37 CFR 1.137(b)
Attorney Docket No. 60021-379801	:	

This is a decision on the renewed petition, filed October 13, 2006, which is being treated as a petition under 37 CFR 1.137(b) to revive the instant nonprovisional application for failure to timely notify the U.S. Patent and Trademark (USPTO) of the filing of an application in a foreign country, or under a multinational treaty that requires publication of applications eighteen months after filing. *See* 37 CFR 1.137(f).

The petition is **GRANTED**.

Petitioner states that the instant nonprovisional application is the subject of an application filed in an eighteen-month publication country on April 13, 2006. However, the USPTO was unintentionally not notified of this filing within 45 days subsequent to the filing of the subject application in an eighteen-month publication country.

In view of the above, this application became abandoned pursuant to 35 U.S.C. § 122(b)(2)(B)(iii) and 37 CFR 1.213(c) for failure to timely notify the Office of the filing of an application in a foreign country or under a multilateral international agreement that requires publication of applications 18 months after filing.

A petition to revive an application abandoned pursuant to 35 U.S.C. 122(b)(2)(B)(iii) for failure to notify the USPTO of a foreign filing must be accompanied by:

(1) the required reply which is met by the notification of such filing in a foreign country or under a multinational treaty;
(2) the petition fee as set forth in 37 CFR 1.17(m); and
(3) a statement that the entire delay in filing the required reply from the due date of the reply until the filing of a grantable petition was unintentional.

The instant petition has been found to be in compliance with 37 CFR 1.137(b). Accordingly, the failure to timely notify the USPTO of a foreign or international filing within 45 days after the date of filing of such foreign or international application as provided by 35 U.S.C. § 122(b)(2)(B)(iii) and 37 CFR 1.213(c) is accepted as having been unintentionally delayed.

The previous Request and Certification under 35 U.S.C. § 122(b)(2)(B)(i) has been rescinded. A Notice Regarding Rescission of Nonpublication Request which sets forth the projected publication date accompanies this decision on petition.

Telephone inquiries concerning this decision should be directed to the undersigned at (571) 272-3215.

This application is being forwarded to Technology Center Art Unit 3623 for examination in due course.

Charlema R. Grant
Petitions Attorney
Office of Petitions

ATTACHMENT: Notice Regarding Rescission of Nonpublication Request

UNITED STATES PATENT AND TRADEMARK OFFICE

UNITED STATES DEPARTMENT OF COMMERCE
United States Patent and Trademark Office
Address: COMMISSIONER FOR PATENTS
P.O. Box 1450
Alexandria, Virginia 22313-1450
www.uspto.gov

APPLICATION NUMBER	FILING/RECEIPT DATE	FIRST NAMED APPLICANT	ATTY. DOCKET NO.
10/811,367	03/26/2004	Kevin N. Quiring	60021-379801

CONFIRMATION NO. 2811

29838
OPPENHEIMER WOLFF & DONNELLY, LLP
PLAZA VII, SUITE 3300
45 SOUTH SEVENTH STREET
MINNEAPOLIS, MN 55402-1609

Date Mailed: 01/04/2007

Communication Regarding Rescission Of Nonpublication Request and/or Notice of Foreign Filing

Applicant's rescission of the previously-filed nonpublication request and/or notice of foreign filing is acknowledged. The paper has been reflected in the Patent and Trademark Office's (USPTO's) computer records so that the earliest possible projected publication date can be assigned.

The projected publication date is 04/12/2007.

If applicant rescinded the nonpublication request before or on the date of "foreign filing,"[1] then no notice of foreign filing is required.

If applicant foreign filed the application after filing the above application and before filing the rescission, and the rescission did not also include a notice of foreign filing, then a notice of foreign filing (not merely a rescission) is required to be filed within 45 days of the date of foreign filing. See 35 U.S.C. § 122(b)(2)(B)(iii), and Clarification of the United States Patent and Trademark Office's Interpretation of the Provisions of 35 U.S.C. § 122(b)(2)(B)(ii)-(iv), 1272 Off. Gaz. Pat. Office 22 (July 1, 2003).

If a notice of foreign filing is required and is not filed within 45 days of the date of foreign filing, then the application becomes abandoned pursuant to 35 U.S.C. § 122(b)(2)(B)(iii). In this situation, applicant should either file a petition to revive or notify the Office that the application is abandoned. See 37 CFR 1.137(f). Any such petition to revive will be forwarded to the Office of Petitions for a decision. Note that the filing of the petition will not operate to stay any period of reply that may be running against the application.

Questions regarding petitions to revive should be directed to the Office of Petitions at (571) 272-3282. Questions regarding publications of patent applications should be directed to the patent application publication hotline at (703) 605-4283 or by e-mail pgpub@uspto.gov.

[1] Note, for purpose of this notice, that "foreign filing" means "filing an application directed to the same invention in another country, or under a multilateral international agreement, that requires publication of applications 18 months after filing".

UNITED STATES PATENT AND TRADEMARK OFFICE

COMMISSIONER FOR PATENTS
UNITED STATES PATENT AND TRADEMARK OFFICE
P.O. BOX 1450
ALEXANDRIA, VA 22313-1450
WWW.USPTO.GOV

Paper No. None

BACHMAN & LAPOINTE, P.C.
900 CHAPEL STREET
SUITE 1201
NEW HAVEN CT 06510

COPY MAILED

DEC 11 2006

OFFICE OF PETITIONS

In re Application of :
George T. Domizio :
Application No. 10/811,372 : DECISION ON PETITION
Filed: March 26, 2004 : UNDER 37 C.F.R. §1.181
Attorney Docket No. 03-284-2 :
Title: TOGGLE BOLT :

This is a decision on the petition filed on August 22, 2006, pursuant to 37 C.F.R. §1.181, requesting that the holding of abandonment in the above-identified application be withdrawn.

The above-identified application became abandoned for failure to submit an Appeal Brief within two-months of the filing of a Notice of Appeal, filed on March 24, 2006. No extensions of time pursuant to 37 C.F.R. §1.136(a) were received. Accordingly, the above-identified application became abandoned on May 25, 2006. A Notice of Abandonment was mailed on August 1, 2006.

With the present petition, Petitioner has submitted an appeal brief, along with a four-month extension of time. Petitioner has asserted that extensions of time were still available. The electronic file has been reviewed, and Petitioner's assertions appear to be correct. With the filing of this extension of time, the period for reply was extended until the six-month anniversary of the filing of the notice of appeal - September 24, 2006.

Accordingly, the petition under 37 C.F.R. §1.181(a) is **GRANTED**. The holding of abandonment is **WITHDRAWN**.

The Technology Center will be notified of this decision. The Technology Center's support staff will notify the Examiner of

this decision, so that the Appeal Brief which was received with the present petition can be processed.
Telephone inquiries regarding this decision should be directed to the undersigned at (571) 272-3225[1]. All other inquiries concerning examination procedures or status of the application should be directed to the Technology Center.

Paul Shanoski
Senior Attorney
Office of Petitions
United States Patent and Trademark Office

---

1 Petitioner will note that all practice before the Office should be in writing, and the action of the Office will be based exclusively on the written record in the Office. See 37 C.F.R. §1.2. As such, Petitioner is reminded that no telephone discussion may be controlling or considered authority for Petitioner's further action(s).

UNITED STATES PATENT AND TRADEMARK OFFICE

Commissioner for Patents
United States Patent and Trademark Office
P.O. Box 1450
Alexandria, VA 22313-1450
www.uspto.gov

CHRISTOPHER DEVRIES
General Motors Corporation
Legal Staff, Mail Code 482-C23-B21
P.O. Box 300
Detroit MI 48265-3000

COPY MAILED
AUG 1 0 2006
OFFICE OF PETITIONS

In re Application of Katrak et al. :
Application No. 10/811,377 : Decision on Petition
Filing Date: March 25, 2004 :
Attorney Docket No. GP-302755 :

This is a decision on the petition under 37 CFR 1.137(b), filed May 10, 2006, to revive the above-identified application.

The petition is **granted**.

The above-identified application became abandoned for failure to reply in a timely manner to the non-final Office action mailed June 1, 2005, which set a shortened statutory period for reply of three (3) months. An extension of time under the provisions of 37 CFR 1.136(a) was not obtained. Accordingly, the above-identified application became abandoned on September 2, 2005. A Notice of Abandonment was mailed on March 20, 2006.

The instant petition requests revival of the application.

Petitioner has met the requirements to revive the above-identified application pursuant to 37 CFR 1.137(b). Therefore, the petition is granted and the application is revived.

There is no indication that the person signing the instant petition was ever given a power of attorney or authorization of agent to prosecute the above-identified application. If the person signing the instant petition desires to receive future correspondence regarding this application, the appropriate power of attorney or authorization of agent must be submitted. While a courtesy copy of this decision is being mailed to the person signing the instant petition, all future correspondence will be directed solely to the address currently of record until such time as appropriate instructions are received to the contrary.

The petition is signed by Daniel Pote. Pote was not an attorney or agent of record at the time the application became abandoned. Therefore, it appears Pote was not in a position to have firsthand or direct knowledge of the facts and circumstances of the delay. Nevertheless, the statement by Pote that the entire delay was unintentional is being treated as having been made as the result of

a reasonable inquiry into the facts and circumstances of such delay.[1] In the event that such an inquiry has not been made, petitioner must make such an inquiry. If such inquiry results in the discovery that a portion of the delay from the due date for the reply until the filing of a grantable petition pursuant to 37 CFR 1.137(b) was unintentional, petitioner must notify the Office.

Technology Center Art Unit 3661 will be informed of the instant decision and the application, including the papers filed May 10, 2006, will be further examined in due course.

Telephone inquiries regarding this communication should be directed to Petitions Attorney Steven Brantley at (571) 272-3203.

Charles Steven Brantley
Senior Petitions Attorney
Office of Petitions

cc: Daniel R. Pote
Suite 325
7150 E. Camelback Road
Scottsdale, AZ 85251

[1] See Changes to Patent Practice and Procedure, 62 *Fed. Reg.* at 53160 and 53178; 1203 *Off. Gaz. Pat. Office* at 88 and 103 (responses to comments 64 and 109) (applicant obligated under 37 CFR 10.18 to inquire into the underlying facts and circumstances when providing the statement required by 37 CFR 1.137(b) to the Patent and Trademark Office).

UNITED STATES PATENT AND TRADEMARK OFFICE

Commissioner for Patents
United States Patent and Trademark Office
P.O. Box 1450
Alexandria, VA 22313-1450
www.uspto.gov

LAW OFFICES OF THOMAS E. SCHATZEL, P.C.
FAIRMONT PLAZA
SUITE 1300
50 W. SAN FERNANDO STREET
SAN JOSE, CA 95113

COPY MAILED

NOV 27 2009

OFFICE OF PETITIONS

In re Patent No. 7,057,554 :
Issue Date: June 6, 2006 :
Application No. 10/811,400 :
Filed: March 25, 2004 :
Attorney Docket No. SS-746-01

NOTICE

This is a notice regarding your request for acceptance of a fee deficiency submission under 37 CFR 1.28. On September 1, 1998, the Court of Appeals for the Federal Circuit held that 37 CFR 1.28(c) is the sole provision governing the time for correction of the erroneous payment of the issue fee as a small entity. **See DH Technology v. Synergystex International, Inc. 154 F.3d 1333, 47 USPQ2d 1865 (Fed. Cir. Sept. 1, 1998).**

The Office no longer investigates or rejects original or reissue applications under 37 CFR 1.56. **1098 Off. Gaz. Pat. Office 502 (January 3, 1989)**. Therefore, nothing in this Notice is intended to imply that an investigation was done.

Your fee deficiency submission under 37 CFR 1.28 is hereby **ACCEPTED**.

Inquiries related to this communication should be directed to Irvin Dingle at (571) 272-3210.

Irvin Dingle
Petitions Examiner
Office of Petitions

UNITED STATES PATENT AND TRADEMARK OFFICE

COMMISSIONER FOR PATENTS
UNITED STATES PATENT AND TRADEMARK OFFICE
P.O. BOX 1450
ALEXANDRIA, VA 22313-1450
WWW.USPTO.GOV

Paper No. None

LENOVO (US) IP Law
Mail Stop ZHHA/B675/PO Box 12195
3039 Cornwallis Road
RTP NC 27709-2195

COPY MAILED

FEB 16 2007

OFFICE OF PETITIONS

In re Application of :
Toshihilko Kataoka :
Application No. 10/811,410 :
Filed: March 26, 2004 :
Attorney Docket No. :
JP920030050US1 :
Title: METHOD FOR DATA :
PROTECTION FOR REMOVABLE :
RECORDING MEDIUM :

DECISION ON PETITION
UNDER 37 C.F.R. §1.137(B)

This is a decision on the petition filed November 7, 2006, pursuant to 37 C.F.R. §1.137(b)[1], to revive the above-identified application.

It is noted that Petitioner's representative has placed the wrong filing date and the wrong title on this petition. Petitioner's representative is reminded that errors such as occurred can result in loss of rights and care must be taken to avoid such.

The above-identified application became abandoned for failure to reply within the meaning of 37 C.F.R §1.113 in a timely manner to

1 A grantable petition pursuant to 37 C.F.R §1.137(b) must be accompanied by:
(1) The reply required to the outstanding Office action or notice, unless previously filed;
(2) The petition fee as set forth in § 1.17(m);
(3) A statement that the entire delay in filing the required reply from the due date for the reply until the filing of a grantable petition pursuant to this paragraph was unintentional. The Commissioner may require additional information where there is a question whether the delay was unintentional, and;
(4) Any terminal disclaimer (and fee as set forth in § 1.20(d)) required pursuant to paragraph (d) of this section.

the final Office action mailed February 28, 2006, which set a shortened statutory period for reply of three months. No extensions of time under the provisions of 37 C.F.R §1.136(a) were obtained, and no response was received. Accordingly, the above-identified application became abandoned on May 29, 2006. A notice of abandonment was mailed on September 28, 2006.

With the present petition, Petitioner has submitted the petition fee and the proper statement of unintentional delay. Petitioner has further included a Request for Continued Examination (RCE) under 37 C.F.R. §1.114, the associated fee, and an amendment. No terminal disclaimer is required.

Petitioner's representative has met requirements (1) and (2) of Rule §1.137(b). The fourth requirement is not applicable.

Regarding the third requirement of Rule §1.137(b), although the proper statement of unintentional delay was submitted, Petitioner's representative added the following sentence: "the Notice of Allowance (emphasis added) was misfiled and was not considered by the Applicant, before the application became abandoned."

It does not appear that the Examiner has mailed a notice of allowance. The present application became abandoned for failure to respond to a final Office action[2]. Petitioner's representative will need to clarify this issue on renewed petition.

Furthermore, it does not appear that the person signing the statement of unintentional delay was in a position to have firsthand or direct knowledge of the facts and circumstances of the delay at issue.

For the above reasons, the petition must be **DISMISSED**.

Any reply must be submitted within **TWO MONTHS** from the mail date of this decision. Extensions of time under 37 C.F.R. §1.136(a) are permitted. The reply should include a cover letter entitled "Renewed Petition Under 37 C.F.R. 1.137(b)". This is not a final agency action within the meaning of 5 U.S.C 704.

The renewed petition should indicate in a prominent manner that the attorney handling this matter is Paul Shanoski, and may be submitted by mail[3], hand-delivery[4], or facsimile[5].

---

2 Perhaps this is a typographical error?
3 Mail Stop Petition, Commissioner for Patents, United States Patent and Trademark Office, P.O. Box 1450, Alexandria, VA, 22313-1450.

If responding by mail, Petitioner's representative is advised not to place the undersigned's name on the envelope. Only the information that appears in the footnote should be included - adding anything else to the address will delay the delivery of the response to the undersigned.

Furthermore, the electronic record reveals that a Revocation of Power of Attorney with New Power of Attorney and Change of Correspondence Address was submitted on August 18, 2006. The request cannot be accepted, and has not been entered.

The request was submitted by one Ismail Lakkis, who has asserted that he is the inventor of the present application, and has requested that the practitioners associated with Customer Number 44279 be appointed. It is noted however that Mr. Lakkis, contrary to his assertion, is not the inventor of the present application, as his name does not appear on the declaration which was included on filing[6]. Consequently, the request cannot be accepted.

Furthermore, Customer Number 44279 is associated with the assignee of the present application, located in California, and it is noted that Petitioner's representative is a practitioner who is located in Florida.

It is noted that the address listed on the petition differs from the address of record. As indicated above, the change of correspondence address that has been filed in this case cannot be accepted. If either Mr. Lakkis or Petitioner's representative desires to receive future correspondence regarding this application, a proper change of correspondence address must be submitted. A courtesy copy of this decision will be mailed to each of these individuals. However, all future correspondence will be directed to the address of record until such time as appropriate instructions are received to the contrary.

Telephone inquiries regarding *this decision* should be directed to the undersigned at (571) 272-3225[7]. All other inquiries

---

4 Customer Window, Randolph Building, 401 Dulaney Street, Alexandria, VA, 22314.
5 (571) 273-8300- please note this is a central facsimile number.
6 Office records reveal however that Mr. Lakkis is an assignee of the present application. Perhaps he checked the wrong box on this form?
7 Petitioner's representative will note that all practice before the Office should be in writing, and the action of the Office will be based exclusively on the written record in the Office. See 37 C.F.R. §1.2. As such, Petitioner's representative is reminded that no telephone discussion may be

concerning examination procedures or status of the application should be directed to the Technology Center.

Paul Shanoski
Senior Attorney
Office of Petitions
United States Patent and Trademark Office

cc: Ismail Lakkis
PULSE-LINK, INC.
1969 KELLOGG AVENUE
CARLSBAD, CA 92008

Ronald V. Davidge
9900 Stirling Road, Suite 219
Cooper City, Florida 33024

---

controlling or considered authority for any further action(s) of Petitioner's representative.

UNITED STATES PATENT AND TRADEMARK OFFICE

COMMISSIONER FOR PATENTS
UNITED STATES PATENT AND TRADEMARK OFFICE
P.O. BOX 1450
ALEXANDRIA, VA 22313-1450
WWW.USPTO.GOV

Paper No.

LENOVO (US) IP Law
Mail Stop ZHHA/B675/PO Box 12195
3039 Cornwallis Road
RTP NC 27709-2195

COPY MAILED
AUG 20 2007
OFFICE OF PETITIONS

In re Application of Toshihilko Kataoka Application No. 10/811,410 Filed: March 26, 2004 Attorney Docket No. JP920030050US1 Title: METHOD FOR DATA PROTECTION FOR REMOVABLE RECORDING MEDIUM	:	DECISION ON RENEWED PETITION UNDER 37 C.F.R. §1.137(B)

This is a decision on the renewed petition filed April 19, 2007, pursuant to 37 C.F.R. §1.137(b)[1], to revive the above-identified application.

The above-identified application became abandoned for failure to reply within the meaning of 37 C.F.R §1.113 in a timely manner to

1 A grantable petition pursuant to 37 C.F.R §1.137(b) must be accompanied by:
(1) The reply required to the outstanding Office action or notice, unless previously filed;
(2) The petition fee as set forth in § 1.17(m);
(3) A statement that the entire delay in filing the required reply from the due date for the reply until the filing of a grantable petition pursuant to this paragraph was unintentional. The Commissioner may require additional information where there is a question whether the delay was unintentional, and;
(4) Any terminal disclaimer (and fee as set forth in § 1.20(d)) required pursuant to paragraph (d) of this section.

the final Office action mailed February 28, 2006, which set a shortened statutory period for reply of three months.

No extensions of time under the provisions of 37 C.F.R §1.136(a) were obtained, and no response was received.

Accordingly, the above-identified application became abandoned on May 29, 2006. A notice of abandonment was mailed on September 28, 2006.

The original petition was filed on November 7, 2006, and was dismissed via the mailing of a decision on February 16, 2007 for failure to meet the third requirement of Rule §1.137(b).

With the present renewed petition, this deficiency has been rectified.

The Technology Center will be notified of this decision. The Technology Center's support staff will notify the Examiner of this decision, so that the Request for Continued Examination which was received on November 7, 2006 can be processed.

It is noted that both a Power of Attorney and Correspondence Address Indication form and a Chance of Correspondence Address form were submitted with this renewed petition. Each request was signed by an attorney who is not of record, and as such, neither can be entered. See 37 C.F.R. §§ 1.33(a)(2) and (b).

A courtesy copy of this decision will be mailed to Petitioner. However, all future correspondence will be directed to the address of record until such time as appropriate instructions are received to the contrary.

Telephone inquiries regarding **this decision** should be directed to the undersigned at (571) 272-3225[2]. All other inquiries

2 Petitioner will note that all practice before the Office should be in writing, and the action of the Office will be based exclusively on the written record in the Office. See 37 C.F.R. §1.2. As such, Petitioner is reminded that no telephone discussion may be controlling or considered authority for any further action(s) of Petitioner.

concerning examination procedures or status of the application should be directed to the Technology Center.

Paul Shanoski
Senior Attorney
Office of Petitions
United States Patent and Trademark Office

cc: Ronald V. Davidge
9900 Stirling Road, Suite 219
Cooper City, Florida 33024

SPE RESPONSE FOR CERTIFICATE OF CORRECTION

Paper No.: X

DATE : **February 07, 2008**

TO SPE OF : ART UNIT **2825**

SUBJECT : Request for Certificate of Correction for Appl. No.: **10/811,418** Patent No.: **7174531 B2**

A response is requested with respect to a request for a certificate of correction.

With respect to the change(s) requested to correct Office and/or Applicant's errors, should the patent read as shown in the certificate of correction attached herewith or the COCIN document(s), in IFW images for the above-identified patented application? No new matter should be introduced, nor should the scope or meaning of the claims be changed.

If the response is for an IFW, within **7** days, please complete and forward the response, to the employee (named below) via scanning into application images, using document code **COCX**.

DO NOT SENT TO ATTORNEY

If the response is for a paper file wrapper, please complete the response and forward the response with the paper file wrapper, to the employee (named below), within **7** days, to:

Certificates of Correction Branch (CofC)
South Tower - 9A22
Palm Location 7580

You can fax the Directors/SPE response to 571-270-9990

LAMONTE NEWSOME

Certificates of Correction Branch

703-308-9390 ext. 112

Thank You For Your Assistance

The request for issuing the above-identified correction(s) is hereby:

Note your decision on the appropriate box.

xApproved	**All** changes apply.
❑ **Approved in Part**	Specify below which changes **do not** apply.
❑ **Denied**	State the reasons for denial below.

Comments: COC filed on 4/2/07 has been approved.

/Jack Chiang/ SPE, Art Unit 2825

UNITED STATES PATENT AND TRADEMARK OFFICE

UNITED STATES DEPARTMENT OF COMMERCE
United States Patent and Trademark Office
Address: COMMISSIONER FOR PATENTS
P.O. Box 1450
Alexandria, Virginia 22313-1450
www.uspto.gov

OSHA LIANG L.L.P.
TWO HOUSTON CENTER
909 FANNIN, SUITE 3500
HOUSTON, TX 77010

Mail Date: 04/20/2010

Applicant	: BuSang Liu	: DECISION ON REQUEST FOR
Patent Number	: 7655255	: RECALCULATION of PATENT
Issue Date	: 02/02/2010	: TERM ADJUSTMENT IN VIEW
Appliction No	: 10/811,420	: OF WYETH AND NOTICE OF INTENT TO
Filed	: 03/26/2004	: ISSUE CERTIFICATE OF CORRECTION
		:

The Request for Recalculation is **GRANTED** to the extent indicated.

The patent term adjustment has been determined to be **622** days. The USPTO will *sua sponte* issue a certificate of correction reflecting the amount of PTA days determined by the recalculation.

Prior to the issuance of the certificate of correction, the USPTO will afford patentee an opportunity to be heard and request reconsideration. Accordingly, patentee has **one month or thirty (30) days**, whichever is longer, to file a request for reconsideration of this patent term adjustment calculation. See 35 U.S.C. 154(b)(3)(B)(ii) and 37 CFR 1.322(a)(4). No extensions of time will be granted under 37 CFR 1.136.

Patentee should use document code PET.OP if electronically filing a request for reconsideration of this patent term adjustment calculation. The patentee must also include the information required by 37 CFR 1.705(b)(2) and the fee required by 37 CFR 1.18(e). If patentee does not file a timely request for reconsideration of this patent term adjustment calculation including the information required by 37 CFR 1.705(b)(2) and the fee required by 37 CFR 1.18(e), the USPTO will issue a certificate of correction reflecting the PTA determination noted above.

Patentee should be aware that in order to preserve the right to review in the United States District Court for the District of Columbia of the USPTO patent term adjustment determination, patentee must ensure that he or she also take the steps required under 35 U.S.C. 154(b)(4)(A) in a timely manner. Nothing in the request for recalculation should be construed as providing an alternative time frame for commencing a civil action under 35 U.S.C. 154(b)(4)(A).

Any questions concerning this decision should be directed to the Office of Patent Legal Administration at 571-272-7702.

UNITED STATES PATENT AND TRADEMARK OFFICE

COMMISSIONER FOR PATENTS
UNITED STATES PATENT AND TRADEMARK OFFICE
P.O. BOX 1450
ALEXANDRIA, VA 22313-1450
www.uspto.gov

APPLE/FENWICK
SILICON VALLEY CENTER
801 CALIFORNIA STREET
MOUNTAIN VIEW CA 94041

COPY MAILED

NOV 26 2007

OFFICE OF PETITIONS

In re Application of :
Hamilton, et al. :
Application No. 10/811,427 : DECISION ON PETITION
Filed: March 26, 2004 :
Atty. Dkt. No.: 18602- :
08744 (P3257US1) :

This is a decision on the petition under 37 CFR 1.181, filed September 13, 2007, to withdraw the holding of abandonment.

The petition is **GRANTED**.

The application was held abandoned May 3, 2007 for failure to timely submit a properly reply to the non-final Office action mailed February 2, 2007. The Office communication set a three month shortened statutory period of time for reply. Notice of Abandonment was mailed August 14, 2007.

Petitioners argue that the Office communication was not received and further indicate that the Office communication was returned to the Office.

In the absence of any irregularity in the mailing of an Office communication, there is a strong presumption that the Office communication was properly mailed to practitioner at the address of record. This presumption may be overcome by a showing that the Office communication was not in fact received. The showing required to establish non-receipt of an Office communication must include a statement from the practitioner stating that the Office communication was not received by the practitioner and attesting to the fact that a search of the file jacket and docket records indicates that the Office communication was not received. A copy of the docket record where the non-received Office communication would have been entered had it been received and docketed must be attached to and referenced in practitioner's statement. *See*, MPEP 711.03(c). The showing outlined above may not be sufficient if there are circumstances that point to a conclusion that the Office communication may

have been lost after receipt rather than a conclusion that the Office communication was lost in the mail.

The arguments and supporting documentation presented have been carefully considered and support the conclusion that the non-final Office was not received.

Moreover, a review of the official application file reveals that the Office communication was, for reasons unknown to the Office, returned to the Office by the United States Postal Service, despite the fact that the Office communication was properly addressed to applicant. There is no indication in the official record that the an attempt was made by the Office to re-mail the Office communication.

Accordingly, Notice of Abandonment is **WITHDRAWN** and the holding of abandonment is hereby **VACATED**.

There is no indication that the petition is signed by a registered patent attorney or patent agent of record who has been appointed to represent applicants. However, in accordance with 37 CFR 1.34, the signature of Mr. Brownstone appearing on the correspondence shall constitute a representation to the United States Patent and Trademark Office that he is authorized to represent the particular party in whose behalf he acts.

This application is being forwarded to Technology Center 2600 for re-mailing of the Office communication. The time period for reply will be set in the new Office communication.

Telephone inquiries concerning this matter may be directed to the undersigned at 571-272-3205.

Alesia M. Brown
Petitions Attorney
Office of Petitions

UNITED STATES PATENT AND TRADEMARK OFFICE

Commissioner for Patents
United States Patent and Trademark Office
P.O. Box 1450
Alexandria, VA 22313-1450
www.uspto.gov

COPY MAILED

MAY 23 2007

OFFICE OF PETITIONS

TRANSPACIFIC LAW GROUP
617 NORTH DELAWARE STREET
SAN MATEO CA 94401

In re Application of

CHOU, Alex
Application No. 10/811,433
Filed: March 25, 2004
Attorney Docket No. **N0133/PP/HH**

DECISION ON PETITION TO WITHDRAW FROM RECORD

This is a decision on the Request to Withdraw as attorney or agent of record under 37 C.F.R. § 1.36(b), filed February 22, 2007.

The request is **NOT APPROVED**.

A grantable request to withdraw as attorney/agent of record must be signed by every attorney/agent seeking to withdraw or contain a clear indication that one attorney is signing on behalf of another/others. A request to withdraw will not be approved unless at least 30 (thirty) days would remain between the date of approval and the later of the expiration date of a time to file a response or the expiration date of the maximum time period which can be extended under 37 C.F.R. § 1.136(a).

The request cannot be approved because no reasons for withdrawal have been provided. The Office cannot, at this time, determine whether practitioner's request is one of the mandatory or permissive reasons enumerated in 37 CFR 10.40. Any subsequent requests must include reasons for withdrawal. Please note that there is a space provided for on PTO/SB/83 (Request to Withdraw as Attorney or Agent) to supply practitioner's reasons.

All future communications from the Office will continue to be directed to the above-listed address until otherwise notified by applicant.

Telephone inquiries concerning this decision should be directed to Michelle R. Eason at 571-272- 4231.

Terri Williams

Terri Williams
Petitions Examiner
Office of Petitions

cc: **VENABLE LLP**
RAYMOND J. HO
575 7TH STREET NW
WASHINGTON, DC 20004-1601

UNITED STATES PATENT AND TRADEMARK OFFICE

COMMISSIONER FOR PATENTS
UNITED STATES PATENT AND TRADEMARK OFFICE
P.O. BOX 1450
ALEXANDRIA, VA 22313-1450
www.uspto.gov

3M INNOVATIVE PROPERTIES COMPANY
PO BOX 33427
ST. PAUL, MN 55133-3427

COPY MAILED
JUL 21 2006
OFFICE OF PETITIONS

In re Application of :
David S. Hardcastle, et al. :
Application No. 10/811,437 : ON PETITION
Filed: March 26, 2004 :
Attorney Docket No.: 59100US002 :

This is a decision on the petition, filed July19, 2006, under 37 CFR 1.313(c)(2) to withdraw the above-identified application from issue after payment of the issue fee.

The petition is **GRANTED**.

The above-identified application is withdrawn from issue for consideration of a submission under 37 CFR 1.114 (request for continued examination). See 37 CFR 1.313(c)(2).

Petitioner is advised that the issue fee paid on February 28, 2006, in the above-identified application cannot be refunded. If, however, the above-identified application is again allowed, petitioner may request that it be applied towards the issue fee required by the new Notice of Allowance. [1]

Telephone inquiries relating to this decision should be directed to the undersigned at (571) 272-3204.

The application is being referred to Technology Center AU 2883 for further processing of the request for continued examination under 37 CFR 1.114.

Sherry D. Brinkley
Petitions Examiner
Office of Petitions

[1]The request to apply the issue fee to the new Notice may be satisfied by completing and returning the new Issue Fee Transmittal Form PTOL-85(b), which includes the following language thereon: "Commissioner for Patents is requested to apply the Issue Fee and Publication Fee (if any) or re-apply any previously paid issue fee to the application identified above." Petitioner is advised that, whether a fee is indicated as being due or not, the Issue Fee Transmittal Form **must** be completed and timely submitted to avoid abandonment. Note the language in bold text on the first page of the Notice of Allowance and Fee(s) Due (PTOL-85).

SPE RESPONSE FOR CERTIFICATE OF CORRECTION

Paper No.: X

DATE : June 16, 2008

TO SPE OF : ART UNIT 2883

SUBJECT : Request for Certificate of Correction for Appl. No.: 10/811437 Patent No.: 7147384 B2

A response is requested with respect to a request for a certificate of correction.

With respect to the change(s) requested to correct Office and/or Applicant's errors, should the patent read as shown in the certificate of correction attached herewith or the COCIN document(s), in IFW images for the above-identified patented application? No new matter should be introduced, nor should the scope or meaning of the claims be changed.

If the response is for an IFW, within **7** days, please complete and forward the response, to the employee (named below) via scanning into application images, using document code **COCX**.

DO NOT SENT TO ATTORNEY

If the response is for a paper file wrapper, please complete the response and forward the response with the paper file wrapper, to the employee (named below), within **7** days, to:

Certificates of Correction Branch (CofC)
South Tower - 9A22
Palm Location 7580

You can fax the Directors/SPE response to 571-270-9990

LAMONTE NEWSOME
Certificates of Correction Branch
703-308-9390 ext. 112

Thank You For Your Assistance

The request for issuing the above-identified correction(s) is hereby:
Note your decision on the appropriate box.

☑ **Approved** — **All** changes apply.

☐ **Approved in Part** — Specify below which changes **do not** apply.

☐ **Denied** — State the reasons for denial below.

Comments: _____

/Frank G Font/ — SPE

2883 — Art Unit

UNITED STATES PATENT AND TRADEMARK OFFICE

Commissioner for Patents
United States Patent and Trademark Office
P.O. Box 1450
Alexandria, VA 22313-1450
www.uspto.gov

OPPENHEIMER WOLFF & DONNELLY, LLP
PLAZA VII, SUITE 3300
45 SOUTH SEVENTH STREET
MINNEAPOLIS MN 55402-1609

COPY MAILED

JAN 0 4 2007

OFFICE OF PETITIONS

In re Application of	:	
Wollan et al.	:	
Application No. 10/811,439	:	DECISION ON PETITION
Filed: March 26, 2004	:	UNDER 37 CFR 1.137(b)
Attorney Docket No. 60021-378601	:	

This is a decision on the petition, filed August 21, 2006, which is being treated as a petition under 37 CFR 1.137(b) to revive the instant nonprovisional application for failure to timely notify the U.S. Patent and Trademark (USPTO) of the filing of an application in a foreign country, or under a multinational treaty that requires publication of applications eighteen months after filing. *See* 37 CFR 1.137(f).

The petition is **DISMISSED**.

Any request for reconsideration of this decision must be submitted within TWO (2) MONTHS from the mail date of this decision. Extensions of time under 37 CFR 1.136(a) are permitted. The reconsideration request should include a cover letter entitled "Renewed Petition under 37 CFR 1.137(b)." This is **not** a final agency action within the meaning of 5 U.S.C. § 704. No additional petition fee is required.

Petitioner states that the instant non-provisional application is the subject of an application filed in a foreign country and the U. S. Patent and Trademark Office was unintentionally not notified of this filing within 45 days subsequent to the filing of the subject application in a foreign country. A review of the file record shows that a Request to Rescind was filed on August 21, 2006. However, petitioner has not provided the exact filing date of the foreign application. Before a proper determination on the merits of the petition can be decided, petitioner must supply the filing date of the foreign application.

Further correspondence with respect to this matter should be addressed as follows:

By mail: Mail Stop PETITION
Commissioner for Patents
Post Office Box 1450
Alexandria, VA 22313-1450

By Fax: (571) 273-8300
ATTN: Office of Petitions

Telephone inquiries concerning this decision should be directed to the undersigned at (571) 272-3206.

Liana Walsh
Petitions Examiner
Office of Petitions

UNITED STATES PATENT AND TRADEMARK OFFICE

Commissioner for Patents
United States Patent and Trademark Office
P.O. Box 1450
Alexandria, VA 22313-1450
www.uspto.gov

OPPENHEIMER WOLFF & DONNELLY, LLP
PLAZA VII, SUITE 3300
45 SOUTH SEVENTH STREET
MINNEAPOLIS MN 55402-1609

COPY MAILED

JAN 2 4 2007

OFFICE OF PETITIONS

In re Application of	:	
Wollan et al.	:	
Application No. 10/811,439	:	DECISION GRANTING PETITION
Filed: March 26, 2004	:	UNDER 37 CFR 1.137(b)
Attorney Docket No. 60021-378601	:	

This is a decision on the renewed petition, filed January 17, 2006, which is being treated as a petition under 37 CFR 1.137(b) to revive the instant non-provisional application for failure to timely notify the U.S. Patent and Trademark (USPTO) of the filing of an application in a foreign country, or under a multinational treaty that requires publication of applications eighteen months after filing. *See* 37 CFR 1.137(f).

The petition is **GRANTED**.

Petitioner states that the instant nonprovisional application is the subject of an application filed in an eighteen-month publication country on Mach 29, 2005. However, the USPTO was unintentionally not notified of this filing within 45 days subsequent to the filing of the subject application in an eighteen-month publication country.

In view of the above, this application became abandoned pursuant to 35 U.S.C. § 122(b)(2)(B)(iii) and 37 CFR 1.213(c) for failure to timely notify the Office of the filing of an application in a foreign country or under a multilateral international agreement that requires publication of applications 18 months after filing.

A petition to revive an application abandoned pursuant to 35 U.S.C. 122(b)(2)(B)(iii) for failure to notify the USPTO of a foreign filing must be accompanied by:

(1) the required reply which is met by the notification of such filing in a foreign country or under a multinational treaty;
(2) the petition fee as set forth in 37 CFR 1.17(m); and
(3) a statement that the entire delay in filing the required reply from the due date of the reply until the filing of a grantable petition was unintentional.

The instant petition has been found to be in compliance with 37 CFR 1.137(b). Accordingly, the failure to timely notify the USPTO of a foreign or international filing within 45 days after the date of filing of such foreign or international application as provided by 35 U.S.C. § 122(b)(2)(B)(iii) and 37 CFR 1.213(c) is accepted as having been unintentionally delayed.

The previous Request and Certification under 35 U.S.C. § 122(b)(2)(B)(i) has been rescinded. A Notice Regarding Rescission of Nonpublication Request which sets forth the projected publication date of May 3, 2007, accompanies this decision on petition.

This application is being forwarded to Technology Center Art Unit 3623 for examination in due course.

Telephone inquiries concerning this decision should be directed to the undersigned at (571) 272-3206. All other inquiries should be directed to the Technology Center.

Liana Walsh
Petitions Examiner
Office of Petitions

ATTACHMENT: Notice Regarding Rescission of Nonpublication Request

UNITED STATES PATENT AND TRADEMARK OFFICE

UNITED STATES DEPARTMENT OF COMMERCE
United States Patent and Trademark Office
Address: COMMISSIONER FOR PATENTS
P.O. Box 1450
Alexandria, Virginia 22313-1450
www.uspto.gov

APPLICATION NUMBER	FILING/RECEIPT DATE	FIRST NAMED APPLICANT	ATTY. DOCKET NO.
10/811,439	03/26/2004	Robert E. Wollan	60021-378601

CONFIRMATION NO. 1477

29838
OPPENHEIMER WOLFF & DONNELLY, LLP
PLAZA VII, SUITE 3300
45 SOUTH SEVENTH STREET
MINNEAPOLIS, MN 55402-1609

Date Mailed: 01/24/2007

Communication Regarding Rescission Of Nonpublication Request and/or Notice of Foreign Filing

Applicant's rescission of the previously-filed nonpublication request and/or notice of foreign filing is acknowledged. The paper has been reflected in the Patent and Trademark Office's (USPTO's) computer records so that the earliest possible projected publication date can be assigned.

The projected publication date is 05/03/2007.

If applicant rescinded the nonpublication request before or on the date of "foreign filing,"[1] then no notice of foreign filing is required.

If applicant foreign filed the application after filing the above application and before filing the rescission, and the rescission did not also include a notice of foreign filing, then a notice of foreign filing (not merely a rescission) is required to be filed within 45 days of the date of foreign filing. See 35 U.S.C. § 122(b)(2)(B)(iii), and Clarification of the United States Patent and Trademark Office's Interpretation of the Provisions of 35 U.S.C. § 122(b)(2)(B)(ii)-(iv), 1272 Off. Gaz. Pat. Office 22 (July 1, 2003).

If a notice of foreign filing is required and is not filed within 45 days of the date of foreign filing, then the application becomes abandoned pursuant to 35 U.S.C. § 122(b)(2)(B)(iii). In this situation, applicant should either file a petition to revive or notify the Office that the application is abandoned. See 37 CFR 1.137(f). Any such petition to revive will be forwarded to the Office of Petitions for a decision. Note that the filing of the petition will not operate to stay any period of reply that may be running against the application.

Questions regarding petitions to revive should be directed to the Office of Petitions at (571) 272-3282. Questions regarding publications of patent applications should be directed to the patent application publication hotline at (703) 605-4283 or by e-mail pgpub@uspto.gov.

[1] Note, for purpose of this notice, that "foreign filing" means "filing an application directed to the same invention in another country, or under a multilateral international agreement, that requires publication of applications 18 months after filing".

UNITED STATES PATENT AND TRADEMARK OFFICE

Commissioner for Patents
United States Patent and Trademark Office
P.O. Box 1450
Alexandria, VA 22313-1450
www.uspto.gov

PHILI S. JOHNSON
JOHNSON & JOHNSON
ONE JOHNSON & JOHNSON PLAZA
NEW BRUNSWICK NJ 08933-7003

COPY MAILED

AUG 0 8 2005

OFFICE OF PETITIONS

In re Application of :
Sebastian Bohm et al :
Application No. 10/811,446 :
Filed: March 26, 2004 :
Attorney Docket No. DDI-5026 :

ON PETITION

This is a decision on the petition, filed July 28, 2005, under 37 CFR 1.313(c)(2) to withdraw the above-identified application from issue after payment of the issue fee.

The petition is **GRANTED.**

The above-identified application is withdrawn from issue for consideration of a submission under 37 CFR 1.114 (request for continued examination). See 37 CFR 1.313(c)(2).

Petitioner is advised that the issue fee paid on June 30, 2005 in the above-identified application cannot be refunded. If, however, the above-identified application is again allowed, petitioner may request that it be applied towards the issue fee required by the new Notice of Allowance.[1]

Telephone inquiries should be directed to the undersigned at (571) 272-3208.

The examiner of Technology Center AU 2856 will consider the request for continued examination under 37 CFR 1.114.

Karen Creasy
Petitions Examiner
Office of Petitions
Office of the Deputy Commissioner
for Patent Examination Policy

---

[1] The request to apply the issue fee to the new Notice may be satisfied by completing and returning the new Issue Fee Transmittal Form PTOL-85(b), which includes the following language thereon: "Commissioner for Patents is requested to apply the Issue Fee and Publication Fee (if any) or re-apply any previously paid issue fee to the application identified above." Petitioner is advised that, whether a fee is indicated as being due or not, the Issue Fee Transmittal Form **must** be completed and timely submitted to avoid abandonment. Note the language in bold text on the first page of the Notice of Allowance and Fee(s) Due (PTOL-85).

UNITED STATES PATENT AND TRADEMARK OFFICE

Commissioner for Patents
United States Patent and Trademark Office
P.O. Box 1450
Alexandria, VA 22313-1450
www.uspto.gov

MAILED

JUL 27 2004

Director's Office
Group 3700

Harshaw Research Incorporated
P.O. Box 418
Ottawa, KS 66067

In re application of
Willis F. Miller

Serial Number: 10/811447
Filed: March 26, 2004

DECISION ON PETITION TO MAKE SPECIAL UNDER 37 CFR. 1.102(c)

For: **DUAL ROTOR WIND TURBINE**

This is a decision on the petition filed on March 26, 2004, under 37 CFR. 1.102(c) to make special the above identified application because of the age/health of the applicant. Since the requirements of the M.P.E.P Section 708.02 IV have been met, the petition will be GRANTED.

The examiner is directed (1) to make an interference search for possible interfering applications, (2) to promptly examine this application out of turn, and (3) if any interfering application is discovered, to examine such application simultaneously and state in the first official letter of such application that it is being taken out of turn because of a possible interference.

Petitioner is advised that this application will continue to be special, throughout its entire prosecution and pendency, including interference or appeal, if any, only is Petitioner makes a prompt bona-fide effort, in response to each Office action, to place the application in condition for allowance, even if it is necessary to conduct an interview with the Examiner to accomplish this purpose.

Summary: Decision on Petition **GRANTED**.

Richard A. Bertsch
Director
Technology Center 3700
(703) 308-0975

rt: 7/23/04

UNITED STATES PATENT AND TRADEMARK OFFICE

Commissioner for Patents
United States Patent and Trademark Office
P. O. Box 1450
Alexandria, VA 22313-1450
www. uspto. gov

SAWYER LAW GROUP LLP
P.O. BOX 51418
PALO ALTO, CA 94303

COPY MAILED

SEP 29 2006

OFFICE OF PETITIONS

In re Application of	:	
Peter Arthur Schade	:	
Application No. 10/811,455	:	ON PETITION
Filed: March 25, 2004	:	
Attorney Docket No. 2812P	:	

This is a decision on the petition under 37 CFR 1.137(b), filed July 31, 2006, to revive the above-identified application.

The petition is **GRANTED**.

The above-identified application became abandoned for failure to reply in a timely manner to the non-final Office action mailed January 13, 2006, which set a shortened statutory period for reply of three (3) months. No extension of time under the provisions of 37 CFR 1.136(a) were obtained. Accordingly, the above-identified application became abandoned on April 14, 2006.

Telephone inquiries concerning this decision should be directed to Irvin Dingle at (571) 272-3210.

This matter is being referred to Technology Center AU 2876 for further processing.

Irvin Dingle
Petitions Examiner
Office of Petitions

UNITED STATES PATENT AND TRADEMARK OFFICE

Commissioner for Patents
United States Patent and Trademark Office
P.O. Box 1450
Alexandria, VA 22313-1450
www.uspto.gov

SAWYER LAW GROUP LLP
P.O. Box 51418
Palo Alto CA 94303

COPY MAILED

MAR 3 1 2008

OFFICE OF PETITIONS

In re Application of
Peter Arthur Schade
Application No. 10/811,455
Filed: March 25, 2004
Attorney Docket Number: 2812P

ON PETITION

This is a decision on the petition filed September 11, 2007, under 37 CFR 1.137(a) to revive the above-identified application.

The petition to revive under 37 CFR § 1.137(a) is **DISMISSED**.

Any request for reconsideration must be submitted within TWO (2) MONTHS from the mail date of this decision. Extensions of time under 37 CFR § 1.136(a) are permitted. The reconsideration request should include a cover letter entitled "Renewed Petition under 37 CFR § 1.137(a)." This is **not** a final agency action within the meaning of 5 U.S.C. § 704.

This application became abandoned for failure to timely submit the issue and publication fees, as required by the Notice of Allowance and Fee (s) Due which was mailed January 11, 2007. The Notice of Allowance and Fee (s) Due set a three (3) month statutory period for reply. Extensions of time were not available under the provisions of 37 CFR 1.136(a). Accordingly, this application became abandoned on April 12, 2007. A Notice of Abandonment was mailed on May 8, 2007.

Petitioner contends a reply to the Notice of Allowance and Issue Fee Due was submitted December 7, 2006.

PETITION TO REVIVE UNDER 37 CFR § 1.137(a)

A grantable petition under 37 CFR § 1.137(a) must be accompanied by:

(1) the required reply,[1]

(2) the petition fee,

(3) a showing to the satisfaction of the Director that the entire delay in filing the required reply from the due date for the reply until the filing of a grantable petition pursuant to this paragraph was unavoidable, and

(4) a terminal disclaimer and fee if the application was filed on or before June 8, 1995 or if the application is a design application.

The instant petition lacks item (3).

As to item (3), the showing of record is not sufficient to establish to the satisfaction of the Director that the delay was unavoidable within the meaning of 37 CFR §1.137(a).

The Office may revive an abandoned application if the delay in responding to the relevant outstanding office requirement is shown to the satisfaction of the Commissioner to have been "unavoidable." See, 37 CFR § 1.137(a)(3). Decisions on reviving abandoned applications have adopted the reasonably prudent person standard in determining if the delay was unavoidable. Ex parte Pratt, 1887 Dec. Comm'r Pat. 31, 32-33 (Comm'r Pat. 1887) (the term "unavoidable" is applicable to ordinary human affairs, and requires no more greater care or diligence than is generally used and observed by prudent and careful men in relation to their most important business."); In re Mattullath, 38 App. D.C. 497, 514-15 (D.C. Cir. 1912); Ex parte Henrich, 1913 Dec. Comm'r Pat. 139, 141 (Comm'r Pat. 1913). In addition, decisions on revival are made on a "case by case basis, taking all the facts and circumstances into account." Smith v. Mossinghoff, 671 F.2d 533, 538, 213 USPQ 977, 982 (D.C. Cir. 1982). A petition to revive an application as unavoidably abandoned cannot be granted where petitioner has failed to meet his or her burden of establishing the cause of the unavoidable delay. Haines v. Quigg, 673 F. Supp. 314, 5 USPQ2D 1130 (N.D. Ind. 1987).

The showing of record is inadequate to establish unavoidable delay within the meaning of 35 U.S.C. § 133 and 37 CFR 1.137(a).[2] Specifically, an application is "unavoidably" abandoned only where petitioner, or counsel for petitioner, takes all action necessary for a proper response to the outstanding Office action, but through the intervention of unforeseen circumstances, such as failure of mail, telegraph, facsimile, or the negligence of otherwise reliable employees, the response is not timely received in the Office.[3]

Petitioner contends the issue fee transmittal form with authorization included a credit card authorization. The Issue fee transmittal also contained authorization to charge

---

[1] In a nonprovisional application abandoned for failure to prosecute, the required reply may be met by the filing of a continuing application. In an application or patent, abandoned or lapsed for failure to pay the issue fee or any portion thereof, the required reply must be the payment of the issue fee or any outstanding balance thereof.

[2] See MPEP 711(c)(III)(c)(2) for a discussion of the requirements for a showing of unavoidable delay.

[3] Ex parte Pratt, 1887 Dec. Comm'r Pat. 31 (Comm'r Pat. 1887).

deposit account no. 02-2120.

A review of the record shows that the issue fee transmittal was not received until after the three month reply period. Although the issue fee transmittal form contained a certificate of mailing dated April 9, 2007, the form was not received in the Office until May 9, 2007.

Where a certificate of mailing under 37 CFR 1.8, but not a postcard receipt, is relied upon in a petition to withdraw the holding of abandonment, see 37 CFR 1.8(b) and MPEP § 512. As stated in 37 CFR 1.8(b)(3) the statement that attests to the previous timely mailing or transmission of the correspondence must be on a personal knowledge basis, or to the satisfaction of the Director of the USPTO. If the statement attesting to the previous timely mailing is not made by the person who signed the certificate of mailing (i.e., there is no personal knowledge basis), then the statement attesting to the previous timely mailing should include evidence that supports the conclusion that the correspondence was actually mailed (e.g., copies of a mailing log establishing that correspondence was mailed for that application).

The certificate of mailing was executed by Mary Mundy who has not provided a statement. Further, the statement provided by Attorney Sawyer is not sufficient to establish the issue fee transmittal was timely mailed.

Alternative Venue

Petitioner may wish to consider filing a petition to revive based on unintentional abandonment under 37 CFR 1.137(b). A grantable petition pursuant to 37 C.F.R. § 1.137(b) must be accompanied by the required reply, the required petition fee ($750.00 for small entity, $1500 for other than small entity), and a statement that the **entire** delay in filing the required reply from the due date for the reply until the filing of a grantable petition pursuant to 37 C.F.R. § 1.137(b) was unintentional.

The filing of a petition under 37 C.F.R. § 1.137(b) cannot be intentionally delayed, and therefore, must be filed promptly. A person seeking revival due to unintentional delay cannot make a statement that the delay was unintentional unless the entire delay, including the delay from the date it was discovered that the application was abandoned until the filing of the petition to revive under 37 C.F.R. § 1.137(b), was unintentional. A statement that the delay was unintentional is not appropriate if petitioner intentionally delayed the filing of a petition for revival under 37 C.F.R. § 1.137(b).

Further correspondence with respect to this matter should be addressed as follows:

By mail: Mail Stop Petition

Commissioner for Patents
P.O. Box 1450
Alexandria, VA 22313-1450

By facsimile: (571) 273-8300

By delivery service:
(FedEx, UPS, DHL, etc.)
U.S. Patent and Trademark Office
Randolph Building
401 Dulany Street
Alexandria, VA 22314

Telephone inquiries should be directed to the undersigned at (571) 272-3215.

Charlema R. Grant

Charlema R. Grant
Petitions Attorney
Office of Petitions

Best Available Copy

UNITED STATES PATENT AND TRADEMARK OFFICE

Commissioner for Patents
United States Patent and Trademark Office
P.O. Box 1450
Alexandria, VA 22313-1450
www.uspto.gov

SAWYER LAW GROUP LLP
P.O. Box 51418
Palo Alto CA 94303

COPY MAILED
SEP 15 2008

In re Application of
Peter Schade
Application No. 10/811,455
Filed: March 25, 2004
Attorney Docket No. 2812P

DECISION ON PETITION

This is a decision on the petition under the unintentional provisions of 37 CFR 1.137(b), filed April 9, 2008, to revive the above-identified application.

The petition is **GRANTED**.

This application became abandoned for failure to timely pay the issue and publication fees on or before April 11, 2007, as required by the Notice of Allowance and Fee(s) Due, mailed January 11, 2007. Accordingly, the date of abandonment of this application is April 12, 2007 .

The petition satisfies the requirements of 37 CFR 1.137(b) in that petitioner has supplied (1) the reply in the form of payment of the issue fee of $700 and the publication fee of $300, (2) the petition fee of $770; and (3) a proper statement of unintentional delay.

Telephone inquiries concerning this decision should be directed to the undersigned at (571) 272-3215.

This application is being referred to the Office of Data Management for processing into a patent.

Charlema Grant

Charlema Grant
Petitions Attorney
Office of Petitions

SPE RESPONSE FOR CERTIFICATE OF CORRECTION

DATE : 1-7-07

Paper No.: _____

TO SPE OF : ART UNIT 3632

SUBJECT : Request for Certificate of Correction on Patent No.: 7096520 B2 (10/811477

A response is requested with respect to the accompanying request for a certificate of correction.

Please complete this form and return with file, within **7** days to:
Palm location **7580, Certificates of Correction Branch – South Tower – 9A22**
If response is for an IFW, **return to employee (named below) via PUBSCofC Team in MADRAS.**
With respect to the change(s) requested, correcting Office and/or Applicant's errors, should the patent read as shown in the certificate of correction (COCIN)? No new matter should be introduced, nor should the scope or meaning of the claims be changed.

Should these drawings be entered?

Eva James

Thank You For Your Assistance

Certificates of Correction Branch
Tel. No. 703-305-8309

The request for issuing the above-identified correction(s) is hereby:
Note your decision on the appropriate box.

- ☒ **Approved** — **All** changes apply.
- ☐ **Approved in Part** — Specify below which changes **do not** apply.
- ☐ **Denied** — State the reasons for denial below.

Comments:

Carl D. Friedman
Supervisory Patent Examiner
Group 3600

SPE

3632
Art Unit

UNITED STATES PATENT AND TRADEMARK OFFICE

Commissioner for Patents
United States Patent and Trademark Office
P.O. Box 1450
Alexandria, VA 22313-1450
www.uspto.gov

SONNENSCHEIN NATH & ROSENTHAL LLP
525 MARKET ST
26TH FLOOR
SAN FRANCISCO CA 94105-2708

COPY MAILED
SEP 12 2007
OFFICE OF PETITIONS

In re Patent No. PP17,770	:	
Issue Date: May 29, 2007	:	
Application No. 10/811,483	:	DECISION ON PETITION
Filed: March 26, 2004	:	
Attorney Docket No. 40000224-0001-002	:	

This is a decision on the "REQUEST FOR CERTIFICATE OF CORRECTION PURSUANT TO 37 CFR 1.323", filed July 30, 2007.

The petition is **DISMISSED**.

MPEP 1481.01 states:

> The Fee(s) Transmittal Form portion (PTOL-85B) of the Notice of Allowance provides a space (item 3) for assignment data which should be completed in order to comply with 37 CFR 3.81. Unless an assignee's name and address are identified in the appropriate space for specifying the assignee, (i.e., item 3 of the Fee(s) Transmittal Form PTOL-85B), the patent will issue to the applicant. Assignment data printed on the patent will be based solely on the information so supplied.
>
> Any request for the issuance of an application in the name of the assignee submitted after the date of payment of the issue fee, and any request for a patent to be corrected to state the name of the assignee must:

(A) state that the assignment was submitted for recordation as set forth in 37 CFR 3.11 before issuance of the patent;

(B) include a request for a certificate of correction under 37 CFR 1.323 along with the fee set forth in 37 CFR 1.20(a); and

(C) include the processing fee set forth in 37 CFR 1.17(i).

Here, the instant request does not meet requirements (A) and (C) above. Patentee has not stated that the assignment was submitted before recordation before issuance of the patent. In addition, while patentee has paid the fee for a certificate of correction as set forth in 37 CFR 1.20(a), patentee has not included the processing fee set forth in 37 CFR 1.17(i).

Furthermore, it is noted that the Revocation and Power of Attorney filed on July 11, 2007 was not proper. The paper was not accompanied by a 37 CFR 3.73(b) statement. As such, the Revocation and Power of Attorney has not been entered at this time. Nevertheless, this decision is being mailed to the address listed in the request filed July 30, 2007.

Further correspondence with respect to this matter should be addressed as follows:

By mail: Mail Stop Petitions
Commissioner for Patents
P.O. Box 1450
Alexandria VA 22313-1450

By FAX: (571)273-8300
Attn: Office of Petitions

Telephone inquiries related to this decision should be directed to the undersigned at (571)272-3207.

Cliff Congo
Petitions Attorney
Office of Petitions

UNITED STATES PATENT AND TRADEMARK OFFICE

Commissioner for Patents
United States Patent and Trademark Office
P.O. Box 1450
Alexandria, VA 22313-1450
www.uspto.gov

BENOIT, C. MARC
LABTRONIX CONCEPT
C/O BENOIT & COTE, s.e.n.c.
1001, DE MAISONNEUVE BOULEVARD WEST
SUITE 210
MONTREAL QC H3A 3C8 CA CANADA

COPY MAILED
FEB 25 2010

In re Application of	:	
Gerald Duhamel et al.	:	
Application No. 10/811,498	:	ON PETITION
Filed: March 29, 2004	:	
Attorney Docket No. P1025US01	:	

This is a decision on the petition under 37 CFR 1.137(b), filed December 22, 2009, to revive the above-identified application.

The petition is **GRANTED**.

The above-identified application became abandoned for failure to reply within the meaning of 37 CFR 1.113 in a timely manner to the non-final Office Action mailed May 13, 2009, which set a shortened statutory period for reply of three (3) months. No extension of time under the provisions of 37 CFR 1.136(a) was obtained. Accordingly, the above-identified application became abandoned on August 14, 2009.

The petition satisfies the conditions for revival pursuant to the provisions of 37 CFR 1.137(b) in that (1) the reply in the form of an amendment; (2) the petition fee of $810; and (3) the required statement of unintentional delay have been received. Accordingly, the reply to the non-final Office Action of May 13, 2009 is accepted as having been unintentionally delayed.

Telephone inquiries concerning this decision should be directed to Miranda Le at (571) 272-4112 or in her absence, the undersigned at (571) 272-7099.

Application No. 10/811,498

The application file is being referred to Technology Center AU 3714 for appropriate action on the concurrently filed amendment.

David Bucci
Petitions Examiner
Office of Petitions

UNITED STATES PATENT AND TRADEMARK OFFICE

COMMISSIONER FOR PATENTS
UNITED STATES PATENT AND TRADEMARK OFFICE
P.O. BOX 1450
ALEXANDRIA, VA 22313-1450
www.uspto.gov

THE PROCTER & GAMBLE COMPANY
INTELLECTUAL PROPERTY DIVISION
WINTON HILL BUSINESS CENTER - BOX 161
6110 CENTER HILL AVENUE
CINCINNATI OH 45224

COPY MAILED
OCT 25 2006
OFFICE OF PETITIONS

In re Application of	:	
Fred N. Desai, et al.	:	
Application No. 10/811,527	:	DECISION ON PETITION
Filed: March 29, 2004	:	UNDER 37 CFR 1.78(a)(6)
Attorney Docket No. 8768MD2	:	

This is a decision on the petition, filed August 7, 2006, which is being treated under 37 CFR 1.78(a)(6) to accept an unintentionally delayed claim under 35 U.S.C. §119(e) for the benefit of provisional application No. 60/337,804 filed November 5, 2001.

The petition is **DISMISSED**.

A petition under 37 CFR 1.78(a)(6) is only applicable to those applications filed on or after November 29, 2000. Further, the petition is appropriate only after expiration of the period specified in 37 CFR 1.78(a)(5)(ii) and must be filed during the pendency of the nonprovisional application. In addition, the petition must be accompanied by:

(1) the reference required by 35 U.S.C. § 119(e) and 37 CFR 1.78(a)(5)(i) to the prior-filed application, unless previously submitted;
(2) the surcharge set forth in § 1.17(t); and
(3) a statement that the entire delay between the date the claim was due under 37 CFR 1.78(a)(5)(ii) and the date the claim was filed was unintentional. The Commissioner may require additional information where there is a question whether the delay was unintentional.

The petition does not comply with item (1) above. Petitioner failed to submit an Application Data Sheet or an amendment to the first sentence of the specification following the title to include a proper reference under 37 CFR 1.78(a)(2)(i). The statement contained in the petition is unacceptable as an

"amendment." Note that 37 CFR 1.121 states that amendments are made by filing a paper, in compliance with § 1.52, directing that specified amendments be made. The pertinent section of 37 CFR 1.52 states that the claim (in this case, the claim for priority), must commence on a separate physical sheet. 37 CFR 1.4(c) states that each distinct subject must be contained in a separate paper since different matters may be considered by different branches of the United States Patent and Trademark Office.

In view of the above, an ADS or amendment in compliance with the aforementioned rules, along with a renewed petition under 37 CFR 1.78(a)(6), must be submitted.

Further correspondence with respect to this matter should be addressed as follows:

By mail: Mail Stop PETITION
Commissioner for Patents
Post Office Box 1450
Alexandria, VA 22313-1450

By hand: U.S. Patent and Trademark Office
Customer Service Window, Mail Stop PETITION
Randolph Building
401 Dulany Street
Alexandria, VA 22314

The centralized facsimile number is **(571) 273-8300**.

Any questions concerning this matter may be directed to Sherry D. Brinkley at (571) 272-3204.

Sherry D. Brinkley
Petitions Examiner
Office of Petitions

Frances M. Hicks
Lead Petitions Examiner
Office of Petitions

UNITED STATES PATENT AND TRADEMARK OFFICE

Commissioner for Patents
United States Patent and Trademark Office
P.O. Box 1450
Alexandria, VA 22313-1450
www.uspto.gov

THE PROCTER & GAMBLE COMPANY
GLOBAL LEGAL DEPARTMENT - IP
SYCAMORE BUILDING - 4TH FLOOR
299 EAST SIXTH STREET
CINCINNATI, OH 45202

COPY MAILED
JAN 06 2010

In re Application of	:	
Fred Naval Desai, et al.	:	
Application No. 10/811,527	:	DECISION ON PETITION
Filed: March 29, 2004	:	UNDER 37 CFR 1.78(a)(6)
Attorney Docket No. 8768MD2	:	

This is a decision on the renewed petition, filed November 1, 2006, under 37 CFR 1.78(a)(6) to accept an unintentionally delayed claim under 35 U.S.C. §119(e) for the benefit of prior-filed provisional application No. 60/337,804 filed November 5, 2001. The delay in responding is regretted; however, the petition was recently referred to the Office of Petition for consideration.

The petition is **GRANTED**.

A petition under 37 CFR 1.78(a)(6) is only applicable to those applications filed on or after November 29, 2000. Further, the petition is appropriate only after expiration of the period specified in 37 CFR 1.78(a)(5)(ii) and must be filed during the pendency of the nonprovisional application. In addition, the petition must be accompanied by:

(1) the reference required by 35 U.S.C. § 119(e) and 37 CFR 1.78(a)(5)(i) to the prior-filed application, unless previously submitted;
(2) the surcharge set forth in § 1.17(t); and
(3) a statement that the entire delay between the date the claim was due under 37 CFR 1.78(a)(5)(ii) and the date the claim was filed was unintentional. The Director may require additional information where there is a question whether the delay was unintentional.

Additionally, the instant nonprovisional application must be pending at the time of filing of the reference to the prior-filed provisional application as required by 37 CFR 1.78(a)(5)(ii). Further, the non-provisional application claiming the benefit of the prior-filed provisional application

must have been filed within twelve months of the filing date of the prior-filed provisional application.

All of the above requirements having been satisfied, the late claim for priority under 35 U.S.C. § 119(e) is accepted as being unintentionally delayed.

The granting of the petition to accept the delayed benefit claim to the prior-filed application under 37 CFR 1.78(a)(6) should not be construed as meaning that this application is entitled to the benefit of the filing date of the prior-filed application. In order for this application to be entitled to the benefit of the prior-filed application, all other requirements under 35 U.S.C. §119(e) and 37 CFR 1.78(a)(4) and (a)(5) must be met. Similarly, the fact that the corrected Filing Receipt accompanying this decision on petition includes the prior-filed application should not be construed as meaning that applicant is entitled to the claim for benefit of priority to the prior-filed application noted thereon. Accordingly, the examiner will, in due course, consider this benefit claim and determine whether the application is entitled to the benefit of the earlier filing date.

A corrected Filing Receipt, which includes the priority claim to the prior-filed provisional application, accompanies this decision on petition.

Any inquiries concerning this decision may be directed to the undersigned at (571) 272-3204. All other inquiries concerning either the examination procedures or status of the application should be directed to the Technology Center.

The application is being forwarded to Technology Center AU 3761 for consideration by the examiner of the claim under 35 U.S.C. §119(e) for the benefit of priority to the prior-filed provisional application.

Sherry D. Brinkley
Petitions Examiner
Office of Petitions

Attachment: Corrected Filing Receipt

UNITED STATES PATENT AND TRADEMARK OFFICE

UNITED STATES DEPARTMENT OF COMMERCE
United States Patent and Trademark Office
Address: COMMISSIONER FOR PATENTS
P.O. Box 1450
Alexandria, Virginia 22313-1450
www.uspto.gov

APPLICATION NUMBER	FILING or 371(c) DATE	GRP ART UNIT	FIL FEE REC'D	ATTY.DOCKET.NO	TOT CLAIMS	IND CLAIMS
10/811,527	03/29/2004	3761	1046	8768MD2	27	1

CONFIRMATION NO. 1921

CORRECTED FILING RECEIPT

OC000000039471416

27752
THE PROCTER & GAMBLE COMPANY
Global Legal Department - IP
Sycamore Building - 4th Floor
299 East Sixth Street
CINCINNATI, OH 45202

Date Mailed: 01/05/2010

Receipt is acknowledged of this non-provisional patent application. The application will be taken up for examination in due course. Applicant will be notified as to the results of the examination. Any correspondence concerning the application must include the following identification information: the U.S. APPLICATION NUMBER, FILING DATE, NAME OF APPLICANT, and TITLE OF INVENTION. Fees transmitted by check or draft are subject to collection. Please verify the accuracy of the data presented on this receipt. **If an error is noted on this Filing Receipt, please submit a written request for a Filing Receipt Correction. Please provide a copy of this Filing Receipt with the changes noted thereon. If you received a "Notice to File Missing Parts" for this application, please submit any corrections to this Filing Receipt with your reply to the Notice. When the USPTO processes the reply to the Notice, the USPTO will generate another Filing Receipt incorporating the requested corrections**

Applicant(s)

Fred Naval Desai, Fairfield, OH;
Urmish Popatlal Dalal, Milford, OH;
Donald Carroll Roe, West Chester, OH;

Assignment For Published Patent Application

The Procter & Gamble Company

Power of Attorney: The patent practitioners associated with Customer Number 27752

Domestic Priority data as claimed by applicant

This application is a DIV of 10/288,095 11/05/2002 PAT 7,056,411
which claims benefit of 60/337,804 11/05/2001

Foreign Applications

If Required, Foreign Filing License Granted: 06/18/2004

The country code and number of your priority application, to be used for filing abroad under the Paris Convention, is **US 10/811,527**

Projected Publication Date: Not Applicable

Non-Publication Request: No

Early Publication Request: No

Title

Variable stretch composites and methods of making the composite

Preliminary Class

604

PROTECTING YOUR INVENTION OUTSIDE THE UNITED STATES

Since the rights granted by a U.S. patent extend only throughout the territory of the United States and have no effect in a foreign country, an inventor who wishes patent protection in another country must apply for a patent in a specific country or in regional patent offices. Applicants may wish to consider the filing of an international application under the Patent Cooperation Treaty (PCT). An international (PCT) application generally has the same effect as a regular national patent application in each PCT-member country. The PCT process **simplifies** the filing of patent applications on the same invention in member countries, but **does not result** in a grant of "an international patent" and does not eliminate the need of applicants to file additional documents and fees in countries where patent protection is desired.

Almost every country has its own patent law, and a person desiring a patent in a particular country must make an application for patent in that country in accordance with its particular laws. Since the laws of many countries differ in various respects from the patent law of the United States, applicants are advised to seek guidance from specific foreign countries to ensure that patent rights are not lost prematurely.

Applicants also are advised that in the case of inventions made in the United States, the Director of the USPTO must issue a license before applicants can apply for a patent in a foreign country. The filing of a U.S. patent application serves as a request for a foreign filing license. The application's filing receipt contains further information and guidance as to the status of applicant's license for foreign filing.

Applicants may wish to consult the USPTO booklet, "General Information Concerning Patents" (specifically, the section entitled "Treaties and Foreign Patents") for more information on timeframes and deadlines for filing foreign patent applications. The guide is available either by contacting the USPTO Contact Center at 800-786-9199, or it can be viewed on the USPTO website at http://www.uspto.gov/web/offices/pac/doc/general/index.html.

For information on preventing theft of your intellectual property (patents, trademarks and copyrights), you may wish to consult the U.S. Government website, http://www.stopfakes.gov. Part of a Department of Commerce initiative, this website includes self-help "toolkits" giving innovators guidance on how to protect intellectual property in specific countries such as China, Korea and Mexico. For questions regarding patent enforcement issues, applicants may call the U.S. Government hotline at 1-866-999-HALT (1-866-999-4158).

LICENSE FOR FOREIGN FILING UNDER

Title 35, United States Code, Section 184

Title 37, Code of Federal Regulations, 5.11 & 5.15

GRANTED

The applicant has been granted a license under 35 U.S.C. 184, if the phrase "IF REQUIRED, FOREIGN FILING LICENSE GRANTED" followed by a date appears on this form. Such licenses are issued in all applications where the conditions for issuance of a license have been met, regardless of whether or not a license may be required as

set forth in 37 CFR 5.15. The scope and limitations of this license are set forth in 37 CFR 5.15(a) unless an earlier license has been issued under 37 CFR 5.15(b). The license is subject to revocation upon written notification. The date indicated is the effective date of the license, unless an earlier license of similar scope has been granted under 37 CFR 5.13 or 5.14.

This license is to be retained by the licensee and may be used at any time on or after the effective date thereof unless it is revoked. This license is automatically transferred to any related applications(s) filed under 37 CFR 1.53(d). This license is not retroactive.

The grant of a license does not in any way lessen the responsibility of a licensee for the security of the subject matter as imposed by any Government contract or the provisions of existing laws relating to espionage and the national security or the export of technical data. Licensees should apprise themselves of current regulations especially with respect to certain countries, of other agencies, particularly the Office of Defense Trade Controls, Department of State (with respect to Arms, Munitions and Implements of War (22 CFR 121-128)); the Bureau of Industry and Security, Department of Commerce (15 CFR parts 730-774); the Office of Foreign AssetsControl, Department of Treasury (31 CFR Parts 500+) and the Department of Energy.

NOT GRANTED

No license under 35 U.S.C. 184 has been granted at this time, if the phrase "IF REQUIRED, FOREIGN FILING LICENSE GRANTED" DOES NOT appear on this form. Applicant may still petition for a license under 37 CFR 5.12, if a license is desired before the expiration of 6 months from the filing date of the application. If 6 months has lapsed from the filing date of this application and the licensee has not received any indication of a secrecy order under 35 U.S.C. 181, the licensee may foreign file the application pursuant to 37 CFR 5.15(b).

UNITED STATES PATENT AND TRADEMARK OFFICE

Commissioner for Patents
United States Patent and Trademark Office
P.O. Box 1450
Alexandria, VA 22313-1450
www.uspto.gov

LADAS & PARRY
26 WEST 61ST STREET
NEW YORK, NY 10023

COPY MAILED

OCT 0 2 2006

OFFICE OF PETITIONS

In re Application of	:	
Schmilovitch, et al.	:	
Application No. 10/811,534	:	DECISION ON PETITION
Filed: March 29, 2004	:	TO WITHDRAW
Attorney Docket No. U 014711-1	:	FROM RECORD
	:	

This is a decision on the Request to Withdraw as attorney or agent of record under 37 C.F.R. § 1.36(b), filed June 5, 2006.

The request is **APPROVED**.

A grantable request to withdraw as attorney/agent of record must be signed by every attorney/agent seeking to withdraw or contain a clear indication that one attorney is signing on behalf of another/others. A request to withdraw will not be approved unless at least 30 (thirty) days would remain between the date of approval and the later of the expiration date of a time to file a response or the expiration date of the maximum time period which can be extended under 37 C.F.R. § 1.136(a).

The request was signed by William R. Evans on behalf of all attorneys of record who are associated with this application.

All attorneys/agents associated with this application have been withdrawn.

Applicant is reminded that there is no attorney of record at this time.

All future correspondence will be directed to the first named inventor Joe Smith at the address indicated below.

The request to change the correspondence of record is not acceptable as the requested correspondence address is not that of: (1) the first named signing inventor; or (2) an intervening assignee of the entire interest under 37 C.F.R 3.71. All future communications from the Office will be directed to the first named signing inventor at the first copied address below until otherwise properly notified by the applicant.

In order to request or take action in a patent matter, the assignee must establish its ownership of the patent to the satisfaction of the Director. In this regard, a Statement under 37 CFR 3.73(b) must have either: (i) documentary evidence of a chain of title from the original owner to the assignee (*e.g.*, copy of an executed assignment), and a statement affirming that the documentary evidence of the chain of title from the original owner to the assignee was or concurrently is being submitted for recordation pursuant to § 3.11; or (ii) a statement specifying where documentary evidence of a chain of title from the original owner to the assignee is recorded in the assignment records of the Office (*e.g.*, reel and frame number).

Telephone inquiries concerning this decision should be directed to April Wise at 571-272-1642.

April M. Wise
Petitions Examiner
Office of Petitions

cc: ZEEV SCHMILOVITCH
3 BEGIN STREET
56478 YEHUD
ISRAEL

cc: S.A.E. AFIKIM CONPUTERIZED
DAIRY MANAGEMENT SYSTEM
KIBBUTZ AFIKIM
1548 KIBBUTZ AFIKIM, ISRAEL

cc: AGRICUKTURAL RESEARCH ORGANIZATION OF
THE STATE OF ISRAEL MINISTRY OF AGRICULTURE
THE VOLCANI CENTER
50200 BET DAGAN, ISRAEL

UNITED STATES PATENT AND TRADEMARK OFFICE

UNITED STATES DEPARTMENT OF COMMERCE
United States Patent and Trademark Office
Address: COMMISSIONER FOR PATENTS
P.O. Box 1450
Alexandria, Virginia 22313-1450
www.uspto.gov

APPLICATION NUMBER	FILING OR 371 (c) DATE	FIRST NAMED APPLICANT	ATTY. DOCKET NO./TITLE
10/811,534	03/29/2004	Zeev Schmilovitch	U 014711-1

CONFIRMATION NO. 2288

OC000000020629204

OC000000020629204

Ladas & Parry
26 West 61st Street
New York, NY 10023

Date Mailed: 09/28/2006

NOTICE REGARDING CHANGE OF POWER OF ATTORNEY

This is in response to the Power of Attorney filed 06/05/2006.

- The withdrawal as attorney in this application has been accepted. Future correspondence will be mailed to the new address of record. 37 CFR 1.33.

APRIL M WISE
OP (571) 272-1642

FORMER ATTORNEY/AGENT COPY

UNITED STATES PATENT AND TRADEMARK OFFICE

Commissioner for Patents
United States Patent and Trademark Office
P.O. Box 1450
Alexandria, VA 22313-1450
www.uspto.gov

JJGJR.: 08-05

Paper No: __

BRIGGS AND MORGAN P.A.
2200 IDS CENTER
80 SOUTH 8TH ST
MINNEAPOLIS MN 55402

COPY MAILED
AUG 0 5 2005
OFFICE OF PETITIONS

In re Application of
Alseth :
Application No. 10/811,539 : ON PETITION
Filed: 29 March, 2004 :
Attorney Docket No. 33144.24 :

This is a decision on the renewed petition filed on 9 June, 2005, to revive the above-identified application under 37 C.F.R. §1.137(b) as abandoned due to unintentional delay.

For the reasons set forth below, the petition under 37 C.F.R. §1.137(b) is **GRANTED**.

BACKGROUND

The record reflects that:

- Petitioner failed to reply timely and properly to the Notice of Missing Parts (inter alia, oath/declaration, replacement drawings) mailed on 9 June, 2004, with reply due absent extension of time on or before 9 August, 2004;
- the application went abandoned by operation of law after midnight 9 August, 2004;
- the Office mailed the Notice of Abandonment on 14 March, 2005;
- with the instant petition with fee, Petitioner filed an oath/declaration and replacement drawings as the reply, and made the statement of unintentional delay.

STATUTES, REGULATIONS AND ANALYSIS

Congress has authorized the Commissioner to "revive an application if the delay is shown to the satisfaction of the Commissioner to have been "unavoidable." 35 U.S.C. §133 (1994).[1]

The regulations at 37 C.F.R. §1.137(a) and (b) set forth the requirements for a petitioner to revive a previously unavoidably or unintentionally, respectively, abandoned application under this congressional grant of authority.

The language of 35 U.S.C. §133 and 37 C.F.R. §1.137(a) is clear, unambiguous, and without qualification: the delay in tendering the reply to the outstanding Office action, as well as filing the first petition seeking revival, must have been unavoidable for the reply now to be accepted on petition.[2] Delays in responding properly raise the question whether delays are unavoidable.[3] Where there is a question whether the delay was unavoidable, Petitioners must meet the burden of establishing that the delay was unavoidable within the meaning of 35 U.S.C. §133 and 37 C.F.R. §1.137(a).[4]

And the Petitioner must be diligent in attending to the matter.[5] Failure to do so does not constitute the care required under Pratt, and so cannot satisfy the test for diligence and due care. By contrast, unintentional delays are those that do not satisfy the very strict statutory and regulatory requirements of unavoidable delay, and also, by definition, are not intentional.

The requirements for a grantable petition under 37 C.F.R. §1.137(b) are the petition and fee, the statement (and possibly a showing) of unintentional delay, a proper reply, and–where appropriate--a terminal disclaimer and fee if the application was filed before 8 June, 1995.

Petitioner has satisfied the requirements of 37 C.F.R.§1.137(b).

---

[1] 35 U.S.C. §133 provides:
35 U.S.C. §133 Time for prosecuting application.
Upon failure of the applicant to prosecute the application within six months after any action therein, of which notice has been given or mailed to the applicant, or within such shorter time, not less than thirty days, as fixed by the Commissioner in such action, the application shall be regarded as abandoned by the parties thereto, unless it be shown to the satisfaction of the Commissioner that such delay was unavoidable.

[2] Therefore, by example, an unavoidable delay in the payment of the Filing Fee might occur if a reply is shipped by the US Postal Service, but due to catastrophic accident, the delivery is not made.

[3] See: *Changes to Patent Practice and Procedure*; *Final Rule Notice*, 62 *Fed. Reg.* at 53158-59 (October 10, 1997), 1203 *Off. Gaz. Pat. Office* at 86-87 (October 21, 1997).

[4] See: In re Application of G, 11 USPQ2d 1378, 1380 (Comm'r Pats. 1989).

[5] See: Diligence in Filing Petitions to Revive and Petitions to Withdraw the Holding of Abandonment, 1124 Off. Gaz. Pat. Office 33 (March 19, 1991). It was and is Petitioner's burden to exercise diligence in seeking either to have the holding of abandonment withdrawn or the application revived. See 1124 Off. Gaz. Pat. Office supra.

CONCLUSION

The record (including the petition filed on 9 June, 2005) does not necessitate a finding that the delay between midnight 9 August, 2004 (date of abandonment), and 9 June, 2005 (date of filing of grantable petition), was not unintentional.

Rather, the Patent and Trademark Office is relying in this matter on duty of candor and good faith of Petitioners' Counsel Gerald E. Helget (Reg. No. 30,948) when accepting Petitioners' representation that the delay in filing the response was unintentional.[6]

Accordingly, the instant petition under 37 C.F.R. §1.137(b) hereby is **granted**.

The instant application is released to OIPE for further processing before the Examiner addresses the issue of the inventive entity presented by the petition under 37 C.F.R. §1.48 in due course.

Telephone inquiries concerning this decision may be directed to the undersigned at (571) 272-3214.

John J. Gillon, Jr.
Senior Attorney
Office of Petitions

[6] See Changes to Patent Practice and Procedure, 62 Fed. Reg. at 53160 and 53178, 1203 Off. Gaz. Pat. Office at 88 and 103 (responses to comments 64 and 109)(applicant obligated under 37 C.F.R. §10.18 to inquire into the underlying facts and circumstances when providing the statement required by 37 C.F.R. §1.137(b) to the Patent and Trademark Office).

UNITED STATES PATENT AND TRADEMARK OFFICE

Commissioner for Patents
United States Patent and Trademark Office
P.O. Box 1450
Alexandria, VA 22313-1450
www.uspto.gov

SMITH & NEPHEW, INC.
1450 E. BROOKS ROAD
MEMPHIS, TN 38116

COPY MAILED

FEB 14 2005

OFFICE OF PETITIONS

ON PETITION

In re Application of :
Samuel O. Coker et al :
Application No. 10/811,549 :
Filed: March 29, 2004 :
Attorney Docket No. HO-P02759US3 :

This is a decision on the petition under 37 CFR 1.182, filed January 13, 2005, to change the order of inventorship.

The petition is **granted.**

Petitioner states "As noted in the executed declaration and Supplemental Application Data Sheet filed herewith, Applicants request that the first name inventor be Samuel O. Sowemimo-Coker, reflecting this inventor's full name, followed by Marcus L. Scott, Marc Long, Ed Margerrison, and Michael B. Cooper." The USPTO Office records do not show an executed declaration and Supplemental Application Data Sheet was ever received.

The file does not indicate a change of address has been submitted, although the address given on the petition differs from the address of record. If appropriate, a change of address should be filed in accordance with MPEP 601.03. A courtesy copy of this decision is being mailed to the address given on the petition; however, the Office will mail all future correspondence solely to the address of record.

Telephone inquiries concerning this matter may be directed to Irvin Dingle at (571) 272-3210.

Irvin Dingle
Petitions Examiner
Office of Petitions
Office of the Deputy Commissioner
for Patent Examination Policy

cc:

Melissa L. Sistrunk
Flubright & Jaworski L.L.P.
1301 McKinney, Suite 5100
Houston, TX 77010-3095

Attachment: Corrected Filing Receipt

UNITED STATES PATENT AND TRADEMARK OFFICE

Commissioner for Patents
United States Patent and Trademark Office
P.O. Box 1450
Alexandria, VA 22313-1450
www.uspto.gov

MAILED

APR 13 2009

OFFICE OF PETITIONS

PVF – SUN MICROSYSTEMS, INC.
C/O PARK, VAUGHAN & FLEMING, LLP
2820 FIFTH STREET
DAVIS, CA 95618-7759

In re Application of :
James A. MOTT, et al :
Application No. 10/811,557 : ON PETITION
Filed: March 29, 2004 :
Attorney Docket No. SUN-P8934 :

This is a decision on the petition under the unintentional provisions of 37 CFR 1.137(b), filed February 10, 2009, to revive the above-identified application.

The petition is **DISMISSED**.

The application became abandoned for failure to timely file a reply within the meaning of 37 CFR 1.113 to the final Office action of July 14, 2008. The proposed reply required for consideration of a petition to revive must be a Notice of Appeal (and appeal fee required by 37 CFR 41.20(b)(2)), an amendment that *prima facie* places the application in condition for allowance, a Request for Continued Examination (RCE) and submission (37 CFR 1.114), or the filing of a continuing application under 37 CFR 1.53(b). *See* MPEP 711.03(c)(III)(A)(2). Since the amendment submitted does not *prima facie* place the application in condition for allowance (see attached Advisory Action), the reply required must be a Notice of Appeal (and appeal fee), RCE, or the filing of a continuing application under 37 CFR 1.53(b).

Any request for reconsideration of this decision must be submitted within TWO (2) MONTHS from the mail date of this decision. Extensions of time under 37 CFR 1.136(a) are permitted. The reconsideration request should include a cover letter entitled "Renewed Petition under 37 CFR 1.137(b)." This is **not** a final agency action within the meaning of 5 U.S.C. § 704.

Further correspondence with respect to this matter should be addressed as follows:

By Mail: Mail Stop PETITION
Commissioner for Patents
P. O. Box 1450
Alexandria, VA 22313-1450

By hand: U. S. Patent and Trademark Office
Customer Service Window, Mail Stop Petitions
Randolph Building
401 Dulany Street
Alexandria, VA 22314

The centralized facsimile number is **(571) 273-8300.**

Telephone inquiries concerning this decision should be directed to the undersigned at (571) 272-6735.

Thurman Page
Petitions Examiner
Office of Petitions

Attachment: Advisory Action

Advisory Action Before the Filing of an Appeal Brief	Application No. 10/811,557	Applicant(s) MOTT ET AL.	
	Examiner BLAKE RUBIN	Art Unit 2457	

--The MAILING DATE of this communication appears on the cover sheet with the correspondence address --

THE REPLY FILED 10 February 2009 FAILS TO PLACE THIS APPLICATION IN CONDITION FOR ALLOWANCE.

1. ☒ The reply was filed after a final rejection, but prior to or on the same day as filing a Notice of Appeal. To avoid abandonment of this application, applicant must timely file one of the following replies: (1) an amendment, affidavit, or other evidence, which places the application in condition for allowance; (2) a Notice of Appeal (with appeal fee) in compliance with 37 CFR 41.31; or (3) a Request for Continued Examination (RCE) in compliance with 37 CFR 1.114. The reply must be filed within one of the following time periods:
   a) ☐ The period for reply expires _____months from the mailing date of the final rejection.
   b) ☐ The period for reply expires on: (1) the mailing date of this Advisory Action, or (2) the date set forth in the final rejection, whichever is later. In no event, however, will the statutory period for reply expire later than SIX MONTHS from the mailing date of the final rejection.
   Examiner Note: If box 1 is checked, check either box (a) or (b). ONLY CHECK BOX (b) WHEN THE FIRST REPLY WAS FILED WITHIN TWO MONTHS OF THE FINAL REJECTION. See MPEP 706.07(f).

Extensions of time may be obtained under 37 CFR 1.136(a). The date on which the petition under 37 CFR 1.136(a) and the appropriate extension fee have been filed is the date for purposes of determining the period of extension and the corresponding amount of the fee. The appropriate extension fee under 37 CFR 1.17(a) is calculated from: (1) the expiration date of the shortened statutory period for reply originally set in the final Office action; or (2) as set forth in (b) above, if checked. Any reply received by the Office later than three months after the mailing date of the final rejection, even if timely filed, may reduce any earned patent term adjustment. See 37 CFR 1.704(b).

NOTICE OF APPEAL

2. ☐ The Notice of Appeal was filed on _____. A brief in compliance with 37 CFR 41.37 must be filed within two months of the date of filing the Notice of Appeal (37 CFR 41.37(a)), or any extension thereof (37 CFR 41.37(e)), to avoid dismissal of the appeal. Since a Notice of Appeal has been filed, any reply must be filed within the time period set forth in 37 CFR 41.37(a).

AMENDMENTS

3. ☒ The proposed amendment(s) filed after a final rejection, but prior to the date of filing a brief, will not be entered because
   (a) ☒ They raise new issues that would require further consideration and/or search (see NOTE below);
   (b) ☐ They raise the issue of new matter (see NOTE below);
   (c) ☐ They are not deemed to place the application in better form for appeal by materially reducing or simplifying the issues for appeal; and/or
   (d) ☐ They present additional claims without canceling a corresponding number of finally rejected claims.
   NOTE: _____. (See 37 CFR 1.116 and 41.33(a)).
4. ☐ The amendments are not in compliance with 37 CFR 1.121. See attached Notice of Non-Compliant Amendment (PTOL-324).
5. ☐ Applicant's reply has overcome the following rejection(s): _____.
6. ☐ Newly proposed or amended claim(s) _____ would be allowable if submitted in a separate, timely filed amendment canceling the non-allowable claim(s).
7. ☒ For purposes of appeal, the proposed amendment(s): a) ☒ will not be entered, or b) ☐ will be entered and an explanation of how the new or amended claims would be rejected is provided below or appended.
   The status of the claim(s) is (or will be) as follows:
   Claim(s) allowed: _____.
   Claim(s) objected to: _____.
   Claim(s) rejected: *1-39*.
   Claim(s) withdrawn from consideration: _____.

AFFIDAVIT OR OTHER EVIDENCE

8. ☐ The affidavit or other evidence filed after a final action, but before or on the date of filing a Notice of Appeal will not be entered because applicant failed to provide a showing of good and sufficient reasons why the affidavit or other evidence is necessary and was not earlier presented. See 37 CFR 1.116(e).
9. ☐ The affidavit or other evidence filed after the date of filing a Notice of Appeal, but prior to the date of filing a brief, will not be entered because the affidavit or other evidence failed to overcome all rejections under appeal and/or appellant fails to provide a showing a good and sufficient reasons why it is necessary and was not earlier presented. See 37 CFR 41.33(d)(1).
10. ☐ The affidavit or other evidence is entered. An explanation of the status of the claims after entry is below or attached.

REQUEST FOR RECONSIDERATION/OTHER

11. ☐ The request for reconsideration has been considered but does NOT place the application in condition for allowance because: _____.
12. ☐ Note the attached Information *Disclosure Statement*(s). (PTO/SB/08) Paper No(s). _____
13. ☒ Other: See Continuation Sheet.

/Rubin Blake/
Examiner, Art Unit 2457

Continuation of 13. Other:

With respect to independent claims 1, 12, 22, and 35, the applicant has amended the claims to include features which are not found in the prior art of record. Specfically, the applicant has included a limitation where both the first and last sequence numbers of an entries in a linked list of queue pairs in an RDMA read request include a sequence number corresponding to the first and last expected response of the RDMA read. Therefor the amendments would require further search in order to properly determine the patentability of the claims as amended.

UNITED STATES PATENT AND TRADEMARK OFFICE

UNITED STATES DEPARTMENT OF COMMERCE
United States Patent and Trademark Office
Address: COMMISSIONER FOR PATENTS
P.O. Box 1450
Alexandria, Virginia 22313-1450
www.uspto.gov

PVF -- SUN MICROSYSTEMS INC.
C/O PARK, VAUGHAN & FLEMING LLP
2820 FIFTH STREET
DAVIS, CA 95618-7759

Mail Date: 04/21/2010

Applicant	: James A. Mott	: DECISION ON REQUEST FOR
Patent Number	: 7620693	: RECALCULATION of PATENT
Issue Date	: 11/17/2009	: TERM ADJUSTMENT IN VIEW
Appliction No	: 10/811,557	: OF WYETH AND NOTICE OF INTENT TO
Filed	: 03/29/2004	: ISSUE CERTIFICATE OF CORRECTION
		:

The Request for Recalculation is **GRANTED** to the extent indicated.

The patent term adjustment has been determined to be **1430** days. The USPTO will *sua sponte* issue a certificate of correction reflecting the amount of PTA days determined by the recalculation.

Prior to the issuance of the certificate of correction, the USPTO will afford patentee an opportunity to be heard and request reconsideration. Accordingly, patentee has **one month or thirty (30) days**, whichever is longer, to file a request for reconsideration of this patent term adjustment calculation. See 35 U.S.C. 154(b)(3)(B)(ii) and 37 CFR 1.322(a)(4). No extensions of time will be granted under 37 CFR 1.136.

Patentee should use document code PET.OP if electronically filing a request for reconsideration of this patent term adjustment calculation. The patentee must also include the information required by 37 CFR 1.705(b)(2) and the fee required by 37 CFR 1.18(e). If patentee does not file a timely request for reconsideration of this patent term adjustment calculation including the information required by 37 CFR 1.705(b)(2) and the fee required by 37 CFR 1.18(e), the USPTO will issue a certificate of correction reflecting the PTA determination noted above.

Patentee should be aware that in order to preserve the right to review in the United States District Court for the District of Columbia of the USPTO patent term adjustment determination, patentee must ensure that he or she also take the steps required under 35 U.S.C. 154(b)(4)(A) in a timely manner. Nothing in the request for recalculation should be construed as providing an alternative time frame for commencing a civil action under 35 U.S.C. 154(b)(4)(A).

Any questions concerning this decision should be directed to the Office of Patent Legal Administration at 571-272-7702.

UNITED STATES PATENT AND TRADEMARK OFFICE

UNITED STATES DEPARTMENT OF COMMERCE
United States Patent and Trademark Office
Address: COMMISSIONER FOR PATENTS
P.O. Box 1450
Alexandria, Virginia 22313-1450
www.uspto.gov

Raytheon Company
2000 East El Segundo Boulevard, EO/E04/N119
P.O. Box 902
El Segundo, CA 90245

Mail Date: 04/21/2010

Applicant	: Gabor Devenyi	: DECISION ON REQUEST FOR
Patent Number	: 7578211	: RECALCULATION of PATENT
Issue Date	: 08/25/2009	: TERM ADJUSTMENT IN VIEW
Appliction No	: 10/811,561	: OF WYETH AND NOTICE OF INTENT TO
Filed	: 03/29/2004	: ISSUE CERTIFICATE OF CORRECTION
		:

The Request for Recalculation is **GRANTED** to the extent indicated.

The patent term adjustment has been determined to be **979** days. The USPTO will *sua sponte* issue a certificate of correction reflecting the amount of PTA days determined by the recalculation.

Prior to the issuance of the certificate of correction, the USPTO will afford patentee an opportunity to be heard and request reconsideration. Accordingly, patentee has **one month or thirty (30) days**, whichever is longer, to file a request for reconsideration of this patent term adjustment calculation. See 35 U.S.C. 154(b)(3)(B)(ii) and 37 CFR 1.322(a)(4). No extensions of time will be granted under 37 CFR 1.136.

Patentee should use document code PET.OP if electronically filing a request for reconsideration of this patent term adjustment calculation. The patentee must also include the information required by 37 CFR 1.705(b)(2) and the fee required by 37 CFR 1.18(e). If patentee does not file a timely request for reconsideration of this patent term adjustment calculation including the information required by 37 CFR 1.705(b)(2) and the fee required by 37 CFR 1.18(e), the USPTO will issue a certificate of correction reflecting the PTA determination noted above.

Patentee should be aware that in order to preserve the right to review in the United States District Court for the District of Columbia of the USPTO patent term adjustment determination, patentee must ensure that he or she also take the steps required under 35 U.S.C. 154(b)(4)(A) in a timely manner. Nothing in the request for recalculation should be construed as providing an alternative time frame for commencing a civil action under 35 U.S.C. 154(b)(4)(A).

Any questions concerning this decision should be directed to the Office of Patent Legal Administration at 571-272-7702.

UNITED STATES PATENT AND TRADEMARK OFFICE

Commissioner for Patents
United States Patent and Trademark Office
P.O. Box 1450
Alexandria, VA 22313-1450
www.uspto.gov

EDWARDS LIFESCIENCES CORPORATION
LEGAL DEPARTMENT
ONE EDWARDS WAY
IRVINE CA 92614

COPY MAILED

OCT 1 0 2008

OFFICE OF PETITIONS

In re Application of :
Salvador MARQUEZ :
Application No. 10/811,565 : DECISION ON PETITION
Filed: March 29, 2004 :
Attorney Docket No. **ECV-5783** :

This is a decision on the petition under the unintentional provisions of 37 CFR 1.137(b), filed June 26, 2008, to revive the above-identified application.

The petition is **GRANTED**.

The application became abandoned for failure to timely file a reply within the meaning of 37 CFR 1.113 to the final Office action of October 12, 2007. The proposed reply required for consideration of a petition to revive must be a Notice of Appeal (and appeal fee required by 37 CFR 41.20(b)(2), an amendment that *prima facie* places the application in condition for allowance, a Request for Continued Examination and submission (37 CFR 1.114), or the filing of a continuing application under 37 CFR 1.53(b). See MPEP 711.03(c)(II)(A)(2). A one (1) month extension of time pursuant to the provisions of 37 CFR 1.136(a) was obtained. Accordingly, the date of abandonment of this application is February 13, 2008.

The petition satisfies the requirements of 37 CFR 1.137(b) in that petitioner has supplied (1) the reply in the form of a Notice of Appeal, (2) the petition fee of $1540, and (3) a proper statement of unintentional delay.
37 CFR 1.137(b)(3) requires a statement that "the entire delay in filing the required reply from the due date for the reply until the filing of a grantable petition pursuant to 37 CFR 1.137(b) was unintentional." Since the statement appearing in the petition varies from the language required by 37 CFR 1.137(b)(3), the statement is being construed as the required statement. Petitioner must notify the Office if this is not a correct reading of the statement appearing in the petition.

Telephone inquiries concerning this decision should be directed to Tredelle Jackson at (571) 272-2783.

This application is being referred to Technology Center AU 3738 to await the filing of an appeal brief or for such other appropriate reply as may be submitted to continue prosecution of the application.

Ramesh Krishnamurthy

Ramesh Krishnamurthy
Petitions Examiner
Office of Petitions

Docket No. ECV-5783

IN THE UNITED STATES PATENT AND TRADEMARK OFFICE

In re Application of: Marquez, et al.	Group Art Unit: 3738
Application No.: 10/811,565	Examiner: Christopher D. Prone
Filing Date: March 29, 2004	**Customer Number: 30452**
For: CONTROLLED SEPARATION HEART VALVE FRAME	Confirmation No.: 1380

Mail Stop AF
Commissioner for Patents
P.O. Box 1450
Alexandria, VA 22313-1450

PETITION UNDER 37 CFR §1.137(b) TO REVIVE AN UNINTENTIONALLY ABANDONED APPLICATION

Dear Sir:

Applicants Petition under 37 CFR §1.137(b) for revival of the above-referenced application for unintentionally being allowed to go abandoned.

1) The reply to the Final Office Action dated October 12, 2007 is a Pre-appeal Brief Request for Review filed concurrently herewith.

2) Please charge the petition fee under 37 CFR §1.17(m) of $1540 to Deposit Account No. 50-1225 (ECV-5783).

3) The entire delay between response due date from the Final Office Action and today's date was unintentional.

4) No Terminal Disclaimer is necessary in this utility case filed after June 7, 1995.

Respectfully submitted,

/Guy Cumberbatch, Reg. No. 36,114/

Date: June 27, 2008

Guy Cumberbatch, Reg. No. 36,114
(805) 201-3006
c/o Rajiv Yadav, Ph.D., Esq., Reg. No. 43,999
Edwards Lifesciences - Law Department
One Edwards Way
Irvine, California 92614
Telephone: (949) 250-6801
Facsimile: (949) 250-6850

Docket No. ECV-5783

IN THE UNITED STATES PATENT AND TRADEMARK OFFICE

In re Application of: Marquez, et al.	Group Art Unit: 3738
Application No.: 10/811,565	Examiner: Christopher D. Prone
Filing Date: March 29, 2004	**Customer Number: 30452**
For: CONTROLLED SEPARATION HEART VALVE FRAME	Confirmation No.: 1380

Mail Stop AF
Commissioner for Patents
P.O. Box 1450
Alexandria, VA 22313-1450

PRE-APPEAL BRIEF REQUEST FOR REVIEW

Dear Sir:

Responsive to the FINAL Office Action dated October 12, 2007, Applicants request that a pre-appeal conference be convened in the present application.

This request is in 5 pages or less and accompanies submission of PTO/SB/33 and a Notice of Appeal under 37 CFR §41.31.

A Petition under 37 CFR §1.137 to Revive the present application accompanies this filing.

Docket No. ECV-5783

IN THE UNITED STATES PATENT AND TRADEMARK OFFICE

In re Application of: Marquez, et al.	Group Art Unit: 3738
Application No.: 10/811,565	Examiner: Christopher D. Prone
Filing Date: March 29, 2004	**Customer Number: 30452**
For: CONTROLLED SEPARATION HEART VALVE FRAME	Confirmation No.: 1380

Mail Stop AF
Commissioner for Patents
P.O. Box 1450
Alexandria, VA 22313-1450

NOTICE OF APPEAL UNDER 37 C.F.R. §41.31FROM THE PRIMARY EXAMINER TO THE BOARD OF PATENT APPEALS AND INTERFERENCES

Dear Sir:

Applicants hereby appeal to the Board Of Patent Appeals And Interferences from the decision of the primary Examiner dated October 12, 2007.

The Commissioner is authorized to charge the required Notice of Appeal fee of $510 to Deposit Account No. 50-1225 (Docket No. ECV-5783).

Respectfully submitted,

/Guy Cumberbatch, Reg. No. 36,114/

Date: June 27, 2008

Guy Cumberbatch, Reg. No. 36,114
(805) 201-3006
c/o Rajiv Yadav, Ph.D., Esq., Reg. No. 43,999
Edwards Lifesciences
Law Department
One Edwards Way
Irvine, California 92614
Telephone: (949) 250-6801
Facsimile: (949) 250-6850
Customer No. 30452

Abandoned (No Reply to Final Received).doc

The application became abandoned for failure to timely file a reply within the meaning of 37 CFR 1.113 to the final Office action of . The proposed reply required for consideration of a petition to revive must be a Notice of Appeal (and appeal fee required by 37 CFR 41.20(b)(2), an amendment that *prima facie* places the application in condition for allowance, a Request for Continued Examination and submission (37 CFR 1.114), or the filing of a continuing application under 37 CFR 1.53(b). See MPEP 711.03(c)(II)(A)(2). The petition is not accompanied by the required reply.

Approve

10/811565

UNITED STATES PATENT AND TRADEMARK OFFICE

Commissioner for Patents
United States Patent and Trademark Office
P.O. Box 1450
Alexandria, VA 22313-1450
www.uspto.gov

MAILED
JUN 13 2006
Technology Center 2100

WOODCOCK WASHBURN LLP
ONE LIBERTY PLACE – 46TH FLOOR
PHILADELPHIA, PA 19103

In re Application of: JEFFREY, et al.	)	
Application No. 10/811,585	)	
Filed: MARCH 29, 2004	)	
For: FIREWALL SYSTEM AND METHOD	)	**DECISION ON REQUEST FOR**
VIA FEEDBACK FROM BROAD-SCOPE	)	**WITHDRAWAL AS ATTORNEY**
MONITORING FOR INTRUSION	)	
DETECTION	)	

This is a decision on the Request For Withdrawal As Attorney Under 37 CFR § 1.36 and 10.40(c) filed August 9, 2005.

A Revocation and Substitution Of Power Of Attorney Under 37 CFR § 1.36 was filed on September 8, 2005. The Power Of Attorney revoked all prior Powers Of Attorney and appointed Myers Bigel Sibley & Sajovec, P.A. as the attorneys of record of the instant application. The Power Of Attorney of September 8, 2005 was accepted. Accordingly, all communications from the U.S. Patent and Trademark Office to applicant are to be conducted by Myers Bigel Sibley & Sajovec, P.A.

For the above stated reasons, the request is **DISMISSED AS MOOT**.

No further communication to you regarding this application will be made.

Kathe Hall for

Vincent N. Trans
Special Program Examiner
Technology Center 2100
Computer Architecture, Software, and
Information Security
571-272-3613

cc: MYERS BIGEL SIBLEY & SAJOVEC, P.A.
POST OFFICE BOX 37428
RALEIGH, NORTH CAROLINA 27627

UNITED STATES PATENT AND TRADEMARK OFFICE

Commissioner for Patents
United States Patent and Trademark Office
P.O. Box 1450
Alexandria, VA 22313-1450
www.uspto.gov

WODCOCK WASHBURN
ONE LIBERTY PLACE 46TH FLOOR
PHILADELPHIA, PA 19103

COPY MAILED

JAN 19 2007

OFFICE OF PETITIONS

In re Application of	:	
Aaron et al.	:	DECISION ON PETITION
Application No. 10/811,585	:	TO WITHDRAW
Filed: March 29, 2004	:	FROM RECORD
Attorney Docket No. BELL-0340/00379C1	:	

This is a decision on the Request to Withdraw as attorney or agent of record under 37 C.F.R. § 1.36(b), filed August 9, 2005.

The request is **NOT APPROVED** as moot.

A review of the file record indicates that the power of attorney to the attorneys associated with Customer Number 38952 has been revoked by the assignee of the patent application. Accordingly, the request to withdraw under 37 C.F.R. § 1.36(b) is moot.

There is an outstanding Office action mailed November 27, 2006, that requires a reply.

All future communications from the Office will continue to be directed to the below-listed address until otherwise notified by applicant.

Telephone inquires concerning this decision should be directed to the undersigned at 571-272-3206. All other inquires concerning either the examination or status of the application should be directed to the Technology Center.

Liana Walsh
Petitions Examiner
Office of Petitions

cc:

MYERS BIGEL SIBLEY & SAJOVEC, P.A.
P.O. BOX 37428
RALEIGH NC 27627

UNITED STATES PATENT AND TRADEMARK OFFICE

Commissioner for Patents
United States Patent and Trademark Office
P.O. Box 1450
Alexandria, VA 22313-1450
www.uspto.gov

MYERS BIGEL SIBLEY & SAJOVEC, P.A.
P.O. BOX 37428
RALEIGH, NC 27627

COPY MAILED

SEP 26 2008

OFFICE OF PETITIONS

In re Application of :
Aaron et al. :
Application No. 10/811,585 :
Filed: March 29, 2004 :
Attorney Docket No. BELL-0340/00379 C1 :

ON PETITION

This is a decision on the petition under the unintentional provisions of 37 CFR 1.137(b), filed May 13, 2008, to revive the above-identified application.

The petition is **GRANTED**.

The application became abandoned for failure to timely file a reply within the meaning of 37 CFR 1.113 to the final Office action of October 22, 2007. The proposed reply required for consideration of a petition to revive must be a Notice of Appeal (and appeal fee required by 37 CFR 41.20(b)(2), an amendment that *prima facie* places the application in condition for allowance, a Request for Continued Examination and submission (37 CFR 1.114), or the filing of a continuing application under 37 CFR 1.53(b). See MPEP 711.03(c)(II)(A)(2). In view of the 2-month extension of time filed March 20, 2008, the date of abandonment of this application is March 23, 2008.

The petition satisfies the requirements of 37 CFR 1.137(b) in that petitioner has supplied (1) the reply in the form of a Request for Continued Examination (RCE) and fee of $810, and the submission required by 37 CFR 1.114, (2) the petition fee of $1,540, and (3) a proper statement of unintentional delay.

An extension of time under 37 CFR 1.136 must be filed prior to the expiration of the maximum extendable period for reply. See In re Application of S., 8 USPQ2d 1630, 1631 (Comm'r Pats. 1988). Since the $1,050 extension of time fee submitted on May 13, 2007 was subsequent to the maximum extendable period for reply, this fee is unnecessary and will be credited to petitioner's deposit account as requested.

Telephone inquiries concerning this decision should be directed to Alicia Kelley at (571) 272-6059.

This application is being referred to Technology Center AU 2135 for processing of the RCE and for appropriate action by the Examiner in the normal course of business on the amendment submitted in accordance with 37 CFR 1.114.

/SDB/

Sherry D. Brinkley
Petitions Examiner
Office of Petitions

IN THE UNITED STATES PATENT AND

TRADEMARK OFFICE

Title of Invention: Improved mat 1772 Examiner- Chevalier

Appl. # 10/811590

Filed 3-29-04

Name: Dale C. H. Nevison

Citizenship: U.S.A.

Residence: 136 Channelsyde Dr.

Algonac, Michigan 48001

PETITION TO MAKE SPECIAL BASED UPON AGE

Petitioner, Dale C. H. Nevison, is submitting a patent application for an invention entitled "improved mat" herewith. Petitioner is 66 years of age as appears from the attached affidavit. Petitioner seeks advancement for examination of his application based upon 37 CFR 1.102.

ACCORDINGLY, petitioner, Dale C. H. Nevison, requests advancement for examination of his patent application.

Respectfully,

Gregory T. Zalecki (29,944)
Attorney for Applicant

Dated: March 29, 2004

PETITION GRANTED

Richard Crispino
Special Program Examiner
Technology Center 1700
MAY 23 2005

UNITED STATES PATENT AND TRADEMARK OFFICE

COMMISSIONER FOR PATENTS
UNITED STATES PATENT AND TRADEMARK OFFICE
P.O. BOX 1450
ALEXANDRIA, VA 22313-1450
www.uspto.gov

BLAKELY SOKOLOFF TAYLOR & ZAFMAN, LLP
1279 OAKMEAD PARKWAY
SUNNYVALE, CA 94085-4040

COPY MAILED

SEP 04 2008

OFFICE OF PETITIONS

In re Application of :
Donghui Lu :
Application No. 10/811,591 : ON PETITION
Filed: March 29, 2004 :
Attorney Docket No. 42P19023 :

This is a decision on the petition under 37 CFR 1.137(b), filed on January 22, 2008, to revive the above-identified application.

The application became abandoned for failure to respond to the final Office action mailed March 8, 2007. A Notice of Abandonment was mailed on November 14, 2007.

The petition satisfies the requirements of 37 CFR 1.137(b) in that petitioner has supplied (1) the reply in the form of a Request for Continued Examination (RCE) under 37 CFR 1.114, with the $810 filing fee and an amendment; (2) the petition fee of $1,540; and (3) a proper statement of unintentional delay. Therefore, the petition is **GRANTED**.

This application is being revived for consideration of the RCE.

37 CFR 1.137(c) requires a terminal disclaimer dedicating to the public a terminal part of the term of any patent granted on the above-identified application or any patent granted on any continuing application that contains a specific reference under 35 U.S.C. 120, 121, or 365(c) to the above-identified application. Since the application is not a utility or plant application filed on or before June 8, 1995, a terminal disclaimer is not required. Therefore, the fee of $130 will be refunded to petitioner's deposit account.

The application file is being referred to Technology Center Art Unit 1792, for processing of the RCE and for appropriate action by the Examiner in the normal course of business on the amendment submitted in accordance with 37 CFR 1.114.

Telephone inquiries concerning this decision should be directed to the undersigned at (571) 272-3226.

Andrea Smith
Petitions Examiner
Office of Petitions

UNITED STATES PATENT AND TRADEMARK OFFICE

UNITED STATES DEPARTMENT OF COMMERCE
United States Patent and Trademark Office
Address: COMMISSIONER FOR PATENTS
P.O. Box 1450
Alexandria, Virginia 22313-1450
www.uspto.gov

Buckley, Maschoff & Talwalkar LLC/
Intel Corporation
50 Locust Avenue
New Canaan, CT 06840

Mail Date: 04/21/2010

Applicant	: Ravi Prasher	: DECISION ON REQUEST FOR
Patent Number	: 7633752	: RECALCULATION of PATENT
Issue Date	: 12/15/2009	: TERM ADJUSTMENT IN VIEW
Appliction No	: 10/811,597	: OF WYETH AND NOTICE OF INTENT TO
Filed	: 03/29/2004	: ISSUE CERTIFICATE OF CORRECTION
		:

The Request for Recalculation is **GRANTED** to the extent indicated.

The patent term adjustment has been determined to be **1190** days. The USPTO will *sua sponte* issue a certificate of correction reflecting the amount of PTA days determined by the recalculation.

Prior to the issuance of the certificate of correction, the USPTO will afford patentee an opportunity to be heard and request reconsideration. Accordingly, patentee has **one month or thirty (30) days**, whichever is longer, to file a request for reconsideration of this patent term adjustment calculation. See 35 U.S.C. 154(b)(3)(B)(ii) and 37 CFR 1.322(a)(4). No extensions of time will be granted under 37 CFR 1.136.

Patentee should use document code PET.OP if electronically filing a request for reconsideration of this patent term adjustment calculation. The patentee must also include the information required by 37 CFR 1.705(b)(2) and the fee required by 37 CFR 1.18(e). If patentee does not file a timely request for reconsideration of this patent term adjustment calculation including the information required by 37 CFR 1.705(b)(2) and the fee required by 37 CFR 1.18(e), the USPTO will issue a certificate of correction reflecting the PTA determination noted above.

Patentee should be aware that in order to preserve the right to review in the United States District Court for the District of Columbia of the USPTO patent term adjustment determination, patentee must ensure that he or she also take the steps required under 35 U.S.C. 154(b)(4)(A) in a timely manner. Nothing in the request for recalculation should be construed as providing an alternative time frame for commencing a civil action under 35 U.S.C. 154(b)(4)(A).

Any questions concerning this decision should be directed to the Office of Patent Legal Administration at 571-272-7702.

UNITED STATES PATENT AND TRADEMARK OFFICE

Commissioner for Patents
United States Patent and Trademark Office
P.O. Box 1450
Alexandria, VA 22313-1450
www.uspto.gov

SCHWEGMAN, LUNDBERG & WOESSNER, P.A.
P.O. BOX 2938
MINNEAPOLIS MN 55402

MAILED

MAY 06 2010

OFFICE OF PETITIONS

In re Application of
Harry Duke
Application No. 10/811,605
Filed: March 29, 2004
Attorney Docket No. 1639.002US1

DECISION ON PETITION
TO WITHDRAW
FROM RECORD

This is a decision on the Request to Withdraw as attorney or agent of record under 37 C.F.R. § 1.36(b), filed February 18, 2010.

The request is **NOT APPROVED.**

The Office will no longer accept address changes to a new practitioner or law firm filed with a Request, absent the filing of a power of attorney to the new representative. The Office will either change the correspondence address of record to the most current address information provided for the assignee of the entire interest who properly became of record under 37 CFR 3.71 or, if no assignee of the entire interest has properly been made of record under 37 CFR 3.71, the most current address information provided for the first named inventor. This change has been made in order to avoid subsequent correspondence being directed to an incorrect address or to a practitioner who has not been appointed as practitioner of record by the applicant.

Accordingly, the request to withdraw from record cannot be approved because the change of correspondence address is not that of: (1) the first named inventor; or (2) an assignee of the entire interest under 37 C.F.R 3.71, who has properly intervened. The file record indicates that an assignment has been filed with the Assignment Branch. In order to update the application, a copy of the actual assignment and/or a Statement under 37 CFR 3.73(b), must be submitted with any renewed request.

All future communications from the Office will continue to be directed to the above-identified address until otherwise properly notified.

Telephone inquiries concerning this decision should be directed to the undersigned at 571-272-4618.

/Kimberly Inabinet/

Kimberly Inabinet
Petitions Examiner
Office of Petitions

UNITED STATES PATENT AND TRADEMARK OFFICE

Commissioner for Patents
United States Patent and Trademark Office
P.O. Box 1450
Alexandria, VA 22313-1450
www.uspto.gov

JJGJR.: 06-04

Paper No: __

BRIGGS AND MORGAN P.A.
2200 IDS CENTER
80 SOUTH 8TH ST
MINNEAPOLIS MN 55402

COPY MAILED

JUN 2 8 2005

OFFICE OF PETITIONS

In re Application of
Neilson :
Application No. 10/811,606 : ON PETITION
Filed: 29 March, 2004 :
Attorney Docket No. 34597.3 :

This is a decision on the renewed petition filed on 23 March, 2005, to revive the above-identified application under 37 C.F.R. §1.137(b) as abandoned due to unintentional delay.

For the reasons set forth below, the petition under 37 C.F.R. §1.137(b) is **GRANTED**.

BACKGROUND

The record reflects that:

- Petitioner failed to reply timely and properly to the Notice to File Missing Parts (oath/declaration) mailed on 9 June, 2004, with a reply due, absent a request and fee for extension of time, on or before Monday, 9 August, 2004;
- the application went abandoned by operation of law after midnight 9 August, 2004;
- the Office mailed a Notice of Abandonment on 14 March, 2005;
- with the instant petition with fee, Petitioner filed an oath/declaration, surcharge, and made the statement of unintentional delay.

STATUTES, REGULATIONS AND ANALYSIS

Congress has authorized the Commissioner to "revive an application if the delay is shown to the satisfaction of the Commissioner to have been "unavoidable." 35 U.S.C. §133 (1994).[1]

The regulations at 37 C.F.R. §1.137(a) and (b) set forth the requirements for a petitioner to revive a previously unavoidably or unintentionally, respectively, abandoned application under this congressional grant of authority.

The language of 35 U.S.C. §133 and 37 C.F.R. §1.137(a) is clear, unambiguous, and without qualification: the delay in tendering the reply to the outstanding Office action, as well as filing the first petition seeking revival, must have been unavoidable for the reply now to be accepted on petition.[2] Delays in responding properly raise the question whether delays are unavoidable.[3] Where there is a question whether the delay was unavoidable, Petitioners must meet the burden of establishing that the delay was unavoidable within the meaning of 35 U.S.C. §133 and 37 C.F.R. §1.137(a).[4]

And the Petitioner must be diligent in attending to the matter.[5] Failure to do so does not constitute the care required under Pratt, and so cannot satisfy the test for diligence and due care. By contrast, unintentional delays are those that do not satisfy the very strict statutory and regulatory requirements of unavoidable delay, and also, by definition, are not intentional.

Petitioner has satisfied the requirements of 37 C.F.R.§1.137(b).

CONCLUSION

Therefore, the instant petition under 37 C.F.R. §1.137(b) hereby is **granted**.

---

[1] 35 U.S.C. §133 provides:
35 U.S.C. §133 Time for prosecuting application.
Upon failure of the applicant to prosecute the application within six months after any action therein, of which notice has been given or mailed to the applicant, or within such shorter time, not less than thirty days, as fixed by the Commissioner in such action, the application shall be regarded as abandoned by the parties thereto, unless it be shown to the satisfaction of the Commissioner that such delay was unavoidable.

[2] Therefore, by example, an unavoidable delay in the payment of the Filing Fee might occur if a reply is shipped by the US Postal Service, but due to catastrophic accident, the delivery is not made.

[3] See: *Changes to Patent Practice and Procedure*; *Final Rule Notice*, 62 *Fed. Reg.* at 53158-59 (October 10, 1997), 1203 *Off. Gaz. Pat. Office* at 86-87 (October 21, 1997).

[4] See: In re Application of G, 11 USPQ2d 1378, 1380 (Comm'r Pats. 1989).

[5] See: Diligence in Filing Petitions to Revive and Petitions to Withdraw the Holding of Abandonment, 1124 Off. Gaz. Pat. Office 33 (March 19, 1991). It was and is Petitioner's burden to exercise diligence in seeking either to have the holding of abandonment withdrawn or the application revived. See 1124 Off. Gaz. Pat. Office supra.

The instant application is released to OIPE for further processing as necessary before being forwarded for examination in due course.

Telephone inquiries concerning this decision may be directed to the undersigned at (571) 272-3214.

John J. Gillon, Jr.
Senior Attorney
Office of Petitions

UNITED STATES PATENT AND TRADEMARK OFFICE

Commissioner for Patents
United States Patent and Trademark Office
P.O. Box 1450
Alexandria, VA 22313-1450
www.uspto.gov

INTEL CORPORATION
c/o INTELLEVATE, LLC
P.O. BOX 52050
MINNEAPOLIS MN 55402

COPY MAILED
SEP 02 2008

In re Application of
Lee, et al.
Application No. 10/811,607
Filed: March 29, 2004
Attorney Docket No. 42P19028

ON PETITION

This is a decision on the petition under the unintentional provisions of 37 CFR 1.137(b), filed August 8, 2008, to revive the above-identified application.

The petition is **GRANTED**.

The application became abandoned April 26, 2007 for failure to timely file a reply within the meaning of 37 CFR 1.113 to the final Office action of October 25, 2006. The proposed reply required for consideration of a petition to revive must be a Notice of Appeal (and appeal fee required by 37 CFR 41.20(b)(2), an amendment that *prima facie* places the application in condition for allowance, a Request for Continued Examination and submission (37 CFR 1.114), or the filing of a continuing application under 37 CFR 1.53(b). See MPEP 711.03(c)(III)(A)(2). A three month extension of time under 37 CFR 1.136(a) was timely obtained. Notice of Abandonment was mailed December 31, 2007.

The petition satisfies the requirements of 37 CFR 1.137(b) in that petitioner has supplied (1) the reply in the form of a Request for Continued Examination (RCE), fee, and the submission required by 37 CFR 1.114; (2) the required petition fee; and (3) a proper statement of unintentional delay.

Telephone inquiries concerning this decision should be directed to the undersigned at (571) 272-3205.

This application is being referred to Technology Center AU 2872 for processing of the RCE and for appropriate action by the Examiner in the normal course of business on the amendment submitted in accordance with 37 CFR 1.114.

Alesia M. Brown
Petitions Attorney
Office of Petitions

UNITED STATES PATENT AND TRADEMARK OFFICE

UNITED STATES DEPARTMENT OF COMMERCE
United States Patent and Trademark Office
Address: COMMISSIONER FOR PATENTS
P.O. Box 1450
Alexandria, Virginia 22313-1450
www.uspto.gov

CROMPTON, SEAGER & TUFTE, LLC
1221 NICOLLET AVENUE
SUITE 800
MINNEAPOLIS, MN 55403-2420

Mail Date: 04/21/2010

Applicant	: Suranjan Roychowdhury	: DECISION ON REQUEST FOR
Patent Number	: 7641669	: RECALCULATION of PATENT
Issue Date	: 01/05/2010	: TERM ADJUSTMENT IN VIEW
Appliction No	: 10/811,609	: OF WYETH AND NOTICE OF INTENT TO
Filed	: 03/29/2004	: ISSUE CERTIFICATE OF CORRECTION
		:

The Request for Recalculation is **GRANTED** to the extent indicated.

The patent term adjustment has been determined to be **1682** days. The USPTO will *sua sponte* issue a certificate of correction reflecting the amount of PTA days determined by the recalculation.

Prior to the issuance of the certificate of correction, the USPTO will afford patentee an opportunity to be heard and request reconsideration. Accordingly, patentee has **one month or thirty (30) days**, whichever is longer, to file a request for reconsideration of this patent term adjustment calculation. See 35 U.S.C. 154(b)(3)(B)(ii) and 37 CFR 1.322(a)(4). No extensions of time will be granted under 37 CFR 1.136.

Patentee should use document code PET.OP if electronically filing a request for reconsideration of this patent term adjustment calculation. The patentee must also include the information required by 37 CFR 1.705(b)(2) and the fee required by 37 CFR 1.18(e). If patentee does not file a timely request for reconsideration of this patent term adjustment calculation including the information required by 37 CFR 1.705(b)(2) and the fee required by 37 CFR 1.18(e), the USPTO will issue a certificate of correction reflecting the PTA determination noted above.

Patentee should be aware that in order to preserve the right to review in the United States District Court for the District of Columbia of the USPTO patent term adjustment determination, patentee must ensure that he or she also take the steps required under 35 U.S.C. 154(b)(4)(A) in a timely manner. Nothing in the request for recalculation should be construed as providing an alternative time frame for commencing a civil action under 35 U.S.C. 154(b)(4)(A).

Any questions concerning this decision should be directed to the Office of Patent Legal Administration at 571-272-7702.

UNITED STATES PATENT AND TRADEMARK OFFICE

COMMISSIONER FOR PATENTS
UNITED STATES PATENT AND TRADEMARK OFFICE
P.O. BOX 1450
ALEXANDRIA, VA 22313-1450
www.uspto.gov

MAIL

JUN 2 0 2005

DIRECTOR OFFICE
TECHNOLOGY CENTER 2100

William J. Telesco
148 Babbling Brook Road
Torrington, CT 06790

In re Application of: William Telesco Application No. 10/811,618 Filed: March 29, 2004 For: CONTROLLER AND RESOURCE MANAGEMENT SYSTEM AND METHOD WITH IMPROVED SECURITY FOR	**DECISION ON PETITION TO MAKE SPECIAL UNDER M.P.E.P.§708.02 (X) & (XI): INVENTIONS RELATING TO HIV/AIDS AND CANCER; COUNTERING TERRORISM**

This is a decision on the petition, filed April 4, 2005, which is being treated as a petition under 37 C.F.R. 1.102(d) and M.P.E.P. §708.02 (X) and as a petition under 37 C.F.R. 1.102(d) and M.P.E.P. §708.02 (XI): Inventions relating to HIV/AIDS & Cancer; and Countering Terrorism, respectively, to make the above-identified application special.

The petition filed under 37 C.F.R. 1.102(d) and M.P.E.P. §708.02 (X) is **DISMISSED**.

The petition filed under 37 C.F.R. 1.102(d) and M.P.E.P. §708.02 (XI) is **DISMISSED**.

Applicants who desire that an application relating to HIV/AIDS or cancer, under 37 C.F.R. 1.102(d), and M.P.E.P. §708.02, Section (X), should file a petition and the fee under 37 CFR 1.17(h) requesting the U.S. Patent and Trademark Office to make the application special. The petition for special status should be accompanied by a statement explaining **how the invention contributes to the diagnosis, treatment or prevention of HIV/AIDS or cancer** [emphasis added].

The claimed invention and specification are generally directed to a controller and resource management system and method for independently controlling and managing a computer system having improved security.

In the petition, Applicant merely states that the present invention allows "to freely share online the results of all research conducted ... in the quest to find causes and cures for cancer and autoimmune diseases". Therefore, the Petitioner submission fails to establish a sufficient nexus between the disclosed and claimed invention and how the invention "contributes to the diagnosis, treatment or prevention of HIV/AIDS or cancer", as is required.

M.P.E.P. §708.02 (XI), which sets forth the prerequisites for a grantable petition for Inventions For Countering Terrorism under 37 C.F.R. § 1.102(d), states in relevant part:

> International terrorism as defined in 18 U.S.C. 2331 includes "activities that - (A) involve violent acts or acts dangerous to human life that are a violation of the criminal laws of the United States or of any State, or that would be a criminal violation if committed within the jurisdiction of the United States or of any State; [and] (B) appear to be intended - (i) to intimidate or coerce a civilian population; (ii) to influence the policy of a government by intimidation or coercion; or (iii) to affect the conduct of a government by assassination or kidnapping..." The types of technology for countering terrorism could include, but are not limited to, systems for detecting/identifying explosives, aircraft sensors/security systems, and vehicular barricades/disabling systems.
>
> Applicants who desire that an application relating to inventions for countering terrorism be made special should file a petition **with the petition fee under 37 CFR 1.17(h)** requesting the U.S. Patent and Trademark Office to make the application special. The petition for special status should be accompanied by a statement explaining how the invention contributes to countering terrorism.

Petitioner's submission fails to meet the criteria set out with respect to countering terrorism in M.P.E.P. §708.02 (XI). Initially, it is noted that only one fee payment ($130.00) was enclosed along with the filing of the petition(s). Each section of M.P.E.P. 708.02 (X & XI) require a separate petition fee (under 37 CFR 1.17(h)) of $130.00. Therefore, the single fee enclosed has been applied to the petition under M.P.E.P. §708.02(X), see above discussion.

Further, the claimed invention and specification are generally directed to a controller and resource management system and method for independently controlling and managing a computer system having improved security.

Petitioner does not establish a sufficient nexus between the disclosed and claimed invention and preventing "violent acts or acts dangerous to human life that are a violation of the criminal laws of the United States or of any State" or activities "that would be a criminal violation if committed within the jurisdiction of the United States or of any State", or preventing acts that appear to be intended to intimidate or coerce a civilian population, influence the policy of a government by intimidation or coercion, or affect the conduct of a government by assassination or kidnapping.

As a result, no advancement in the technology of countering terrorism has been persuasively shown.

Accordingly, the petition filed April 4, 2005, under 37 C.F.R. 1.102(d) and M.P.E.P. §708.02 (X) is **DISMISSED**.

Additionally, the petition filed April 4, 2005, under 37 C.F.R. 1.102(d) and M.P.E.P. §708.02 (XI) is **DISMISSED**.

Any request for reconsideration must be filed within TWO MONTHS of the mailing date of this decision. Any inquiries related to this decision may be directed to the undersigned.

It is suggested that Applicant review M.P.E.P. §708.02 regarding other grounds available for filing a petition to make special. In particular, note M.P.E.P. §708.02(VIII): Accelerated Examination, which does not place limitations on the subject matter of the application.

Brian L. Johnson 6/13/05
Special Programs Examiner
Technology Center 2100
Computer Architecture, Software, and Information Security
(571) 272-3595

PTO/SB/66 (03-09)
Approved for use through 03/31/2012. OMB 0651-0016
U.S. Patent and Trademark Office: U.S. DEPARTMENT OF COMMERCE
Under the Paperwork Reduction Act of 1995, no persons are required to respond to a collection of information unless it displays valid OMB control number.

PETITION TO ACCEPT UNINTENTIONALLY DELAYED PAYMENT OF MAINTENANCE FEE IN AN EXPIRED PATENT (37 CFR 1.378(c))

Patent Number	Issue Date (YYYY-MM-DD)	Application Number	Filing Date (YYYY-MM-DD)	Docket Number (if applicable)
6916672	2005-07-12	10811624	2004-03-29	O013 P00903-US2

CAUTION: Maintenance fee (and surcharge, if any) payment must correctly identify: (1) the patent number and (2) the application number of the actual U.S. application leading to issuance of that patent to ensure the fee(s) is/are associated with the correct patent. 37 CFR 1.366(c) and (d).

SMALL ENTITY
☐ Patentee claims, or has previously claimed, small entity status. See 37 CFR 1.27.

LOSS OF ENTITLEMENT TO SMALL ENTITY STATUS
☐ Patentee is no longer entitled to small entity status. See 37 CFR 1.27(g)

NOT Small Entity		Small Entity	
Fee	Code	Fee	Code
◉ 3 ½ year	(1551)	○ 3 ½ year	(2551)
○ 7 ½ year	(1552)	○ 7 ½ year	(2552)
○ 11 ½ year	(1553)	○ 11 ½ year	(2553)

SURCHARGE
The surcharge required by 37 CFR 1.20(i)(2) (Fee Code 1558) must be paid as a condition of accepting unintentionally delayed payment of the maintenance fee.

MAINTENANCE FEE (37 CFR 1.20(e)-(g))
The appropriate maintenance fee must be submitted with this petition.

STATEMENT
THE UNDERSIGNED CERTIFIES THAT THE DELAY IN PAYMENT OF THE MAINTENANCE FEE TO THIS PATENT WAS UNINTENTIONAL

PETITIONER(S) REQUEST THAT THE DELAYED PAYMENT OF THE MAINTENANCE FEE BE ACCEPTED AND THE PATENT REINSTATED

THIS PORTION MUST BE COMPLETED BY THE SIGNATORY OR SIGNATORIES

37 CFR 1.378(d) states: "Any petition under this section must be signed by an attorney or agent registered to practice before the Patent and Trademark Office, or by the patentee, the assignee, or other party in interest."

I certify, in accordance with 37 CFR 1.4(d)(4) that I am

◉ An attorney or agent registered to practice before the Patent and Trademark Office

○ A sole patentee

○ A joint patentee; I certify that I am authorized to sign this submission on behalf of all the other patentees.

○ A joint patentee; all of whom are signing this e-petition

○ The assignee of record of the entire interest

Patent Practitioner			
A signature of the applicant or representative is required in accordance with 37 CFR 1.33 and 10.18. Please see 37 CFR 1.4(d) for the form of the signature			
Signature	/stephen holmes/	Date (YYYY-MM-DD)	2010-05-28
Name	Stephen Holmes	Registration Number	34621

This collection of information is required by 37 CFR 1.378(c). The information is required to obtain or retain a benefit by the public which is to file (and by the USPTO to process) an application. Confidentiality is governed by 35 U.S.C. 122 and 37 CFR 1.11 and 1.14. This collection is estimated to take 1 hour to complete, including gathering, preparing, and submitting the completed application form to the USPTO. Time will vary depending upon the individual case. Any comments on the amount of time you require to complete this form and/ or suggestions for reducing this burden, should be sent to the Chief Information Officer, U.S. Patent and Trademark Office, U.S. Department of Commerce, P.O. Box 1450, Alexandria, VA 22313-1450. DO NOT SEND FEES OR COMPLETED FORMS TO THIS ADDRESS. **This form can only be used when in conjunction with EFS-Web. If this form is mailed to the USPTO, it may cause delays in reinstating the patent.**

Privacy Act Statement

The Privacy Act of 1974 (P.L. 93-579) requires that you be given certain information in connection with your submission of the attached form related to a patent application or patent. Accordingly, pursuant to the requirements of the Act, please be advised that: (1) the general authority for the collection of this information is 35 U.S.C. 2(b)(2); (2) furnishing of the information solicited is voluntary; and (3) the principal purpose for which the information is used by the U.S. Patent and Trademark Office is to process and/or examine your submission related to a patent application or patent. If you do not furnish the requested information, the U.S. Patent and Trademark Office may not be able to process and/or examine your submission, which may result in termination of proceedings or abandonment of the application or expiration of the patent.

The information provided by you in this form will be subject to the following routine uses:

1. The information on this form will be treated confidentially to the extent allowed under the Freedom of Information Act (5 U.S.C. 552) and the Privacy Act (5 U.S.C. 552a). Records from this system of records may be disclosed to the Department of Justice to determine whether the Freedom of Information Act requires disclosure of these records.

2. A record from this system of records may be disclosed, as a routine use, in the course of presenting evidence to a court, magistrate, or administrative tribunal, including disclosures to opposing counsel in the course of settlement negotiations.

3. A record in this system of records may be disclosed, as a routine use, to a Member of Congress submitting a request involving an individual, to whom the record pertains, when the individual has requested assistance from the Member with respect to the subject matter of the record.

4. A record in this system of records may be disclosed, as a routine use, to a contractor of the Agency having need for the information in order to perform a contract. Recipients of information shall be required to comply with the requirements of the Privacy Act of 1974, as amended, pursuant to 5 U.S.C. 552a(m).

5. A record related to an International Application filed under the Patent Cooperation Treaty in this system of records may be disclosed, as a routine use, to the International Bureau of the World Intellectual Property Organization, pursuant to the Patent Cooperation Treaty.

6. A record in this system of records may be disclosed, as a routine use, to another federal agency for purposes of National Security review (35 U.S.C. 181) and for review pursuant to the Atomic Energy Act (42 U.S.C. 218(c)).

7. A record from this system of records may be disclosed, as a routine use, to the Administrator, General Services, or his/her designee, during an inspection of records conducted by GSA as part of that agency's responsibility to recommend improvements in records management practices and programs, under authority of 44 U.S.C. 2904 and 2906. Such disclosure shall be made in accordance with the GSA regulations governing inspection of records for this purpose, and any other relevant (i.e., GSA or Commerce) directive. Such disclosure shall not be used to make determinations about individuals.

8. A record from this system of records may be disclosed, as a routine use, to the public after either publication of the application pursuant to 35 U.S.C. 122(b) or issuance of a patent pursuant to 35 U.S.C. 151. Further, a record may be disclosed, subject to the limitations of 37 CFR 1.14, as a routine use, to the public if the record was filed in an application which became abandoned or in which the proceedings were terminated and which application is referenced by either a published application, an application open to public inspections or an issued patent.

9. A record from this system of records may be disclosed, as a routine use, to a Federal, State, or local law enforcement agency, if the USPTO becomes aware of a violation or potential violation of law or regulation.

UNITED STATES PATENT AND TRADEMARK OFFICE

Commissioner for Patents
United States Patent and Trademark Office
P.O. Box 1450
Alexandria, VA 22313-1450
www.uspto.gov

In re Patent No. 6916672
Issue Date: July 12,2005
Application No. 10811624
Filed: March 29,2004
Attorney Docket No. P00903-US2

:
:DECISION GRANTING PETITION
:UNDER 37 CFR 1.378(c)
:

This is a decision on the electronic petition, filed May 28,2010 ,under 37 CFR 1.378(c) to accept the unintentionally delayed payment of the 3.5 year maintenance fee for the above-identified patent.

The petition is **GRANTED**.

The maintenance fee is accepted, and the above-identified patent reinstated as of May 28,2010 .
This decision also constitutes notice that the fee has been accepted. An electronic copy of the petition and this decision has been created as an entry in the Image File Wrapper. Nevertheless, petitioner should print and retain an independent copy.

Telephone inquiries related to this electronic decision should be directed to the Electronic Business Center at 1-866-217-9197.

UNITED STATES PATENT AND TRADEMARK OFFICE

Commissioner for Patents
United States Patent and Trademark Office
P.O. Box 1450
Alexandria, VA 22313-1450
www.uspto.gov

COPY MAILED

JUL 12 2006

OFFICE OF PETITIONS

KATHLEEN M. HARLESTON
THE HARLESTON LAW FIRM
909 TALL PINE ROAD
MT PLEASANT SC 29464

In re Application of	:	
Jefferson L. Wagner	:	
Application No. 10/811,625	:	ON PETITION
Filed: March 29, 2004	:	
Attorney Docket No. 8079	:	

This is a decision on the petition, filed July 5, 2006, under 37 CFR 1.313(c)(2) to withdraw the above-identified application from issue after payment of the issue fee.

The petition is **GRANTED.**

The above-identified application is withdrawn from issue for consideration of a submission under 37 CFR 1.114 (request for continued examination). See 37 CFR 1.313(c)(2).

Petitioner is advised that the issue fee paid on May 30, 2006, in the above-identified application cannot be refunded. If, however, the above-identified application is again allowed, petitioner may request that it be applied towards the issue fee required by the new Notice of Allowance.[1]

Telephone inquiries should be directed to the undersigned at (571) 272-3208.

The examiner of Technology Center AU 3723 will consider the request for continued examination under 37 CFR 1.114.

Karen Creasy

Karen Creasy
Petitions Examiner
Office of Petitions

---

[1] The request to apply the issue fee to the new Notice may be satisfied by completing and returning the new Issue Fee Transmittal Form PTOL-85(b), which includes the following language thereon: "Commissioner for Patents is requested to apply the Issue Fee and Publication Fee (if any) or re-apply any previously paid issue fee to the application identified above." Petitioner is advised that, whether a fee is indicated as being due or not, the Issue Fee Transmittal Form **must** be completed and timely submitted to avoid abandonment. Note the language in bold text on the first page of the Notice of Allowance and Fee(s) Due (PTOL-85).

UNITED STATES PATENT AND TRADEMARK OFFICE

COMMISSIONER FOR PATENTS
UNITED STATES PATENT AND TRADEMARK OFFICE
P.O. BOX 1450
ALEXANDRIA, VA 22313-1450
www.uspto.gov

Paper No. _____

Date : July 12, 2006

TO : Director, Office of Patent Publication

FROM : Office of the Deputy Commissioner
for Patent Examination Policy

SUBJECT : Withdrawal from Issue of

Applicant(s) :Jefferson L. Wagner
Application No. :10/811,625
Filed :March 29, 2004

The above-identified application has been assigned Patent No. 7,077,385 and an issue date of July 18, 2006.

It is hereby directed that this application be withdrawn from issue at the request of the applicant.

Do not refund the issue fee.

The following erratum should be published in the Official Gazette if the above-identified application is published in the OG of July 18, 2006:

"All reference to Patent No. 7,077,385 to Jefferson L. Wagner of South Carolina for TOOL FOR EXTRACTING AN EMBEDDED ELONGATED OBJECT appearing in the Official Gazette of July 18, 2006 should be deleted since no patent was granted."

Karen Creasy

Karen Creasy
Petitions Examiner
Office of Petitions
Office of the Deputy Commissioner
for Patent Examination Policy

cc: Paul Harrison, MDW-4B03,(FAX-273-5468)
Deneise Boyd, MDE-3D39 (FAX-273-5124)
Mary Louise McAskill, ST-8C15 (FAX 305-4372)
Niomi Farmer, ST-8C14 (FAX-305-4372)
Mary E. Johnson (Cookie), MDE-7C71 (FAX 273-0038
Duane Davis P/OPC MDE-7D89

UNITED STATES PATENT AND TRADEMARK OFFICE

Commissioner for Patents
United States Patent and Trademark Office
P.O. Box 1450
Alexandria, VA 22313-1450
www.uspto.gov

FOLEY AND LARDNER LLP
SUITE 500
3000 K STREET NW
WASHINGTON, DC 20007

COPY MAILED

JUN 1 8 2008

In re Application of	:	
YADAV, Tapesh et al.	:	
Application No. 10/811,628	:	DECISION ON PETITION
Filed: March 29, 2004	:	TO WITHDRAW
Attorney Docket No. **037768-0234**	:	FROM RECORD
	:	

This is a decision on the Request to Withdraw as attorney or agent of record under 37 C.F.R. § 1.36(b), filed May 05, 2008.

The request is **APPROVED**.

A grantable request to withdraw as attorney/agent of record must be signed by every attorney/agent seeking to withdraw or contain a clear indication that one attorney is signing on behalf of another/others. A request to withdraw will not be approved unless at least 30 (thirty) days would remain between the date of approval and the later of the expiration date of a time to file a response or the expiration date of the maximum time period which can be extended under 37 C.F.R. § 1.136(a).

The request was signed by Stephen B. Maebius on behalf of all attorneys of record who are associated with customer No. 22428. All attorneys/agents associated have been withdrawn. Applicant is reminded that there is no attorney of record at this time.

The request to change the correspondence of record is not acceptable as the requested correspondence address is not that of: (1) the first named signing inventor; or (2) an intervening assignee of the entire interest under 37 C.F.R 3.71. All future communications from the Office will be directed to the first named signing inventor.

There is an outstanding Office action mailed April 17, 2008 that requires a reply from the applicant.

Telephone inquiries concerning this decision should be directed to Michelle R. Eason at 571-272-4231.

Michelle R. Eason
Paralegal Specialist
Office of Petitions

cc: **TAPESH YADAV**
2620 TRADE CENTER AVE.
LONGMONT, CO 80503

cc: **MS. DIANE MEYERS**
PPG, INC.
ONE PPG PLACE
39TH FLOOR
PITTSBURGH, PA 15272

UNITED STATES PATENT AND TRADEMARK OFFICE

Commissioner for Patents
United States Patent and Trademark Office
P.O. Box 1450
Alexandria, VA 22313-1450
www.uspto.gov

COPY MAILED

AUG 0 1 2006

OFFICE OF PETITIONS

THE ECLIPSE GROUP
10605 BALBOA BLVD., SUITE 300
GRANADA HILLS CA 91344

In re Application of	:	
Turner et al.	:	
Application No. 10/811,650	:	DECISION ON PETITION
Filed: March 2, 2004	:	TO WITHDRAW
Attorney Docket No. 0956-003	:	FROM RECORD
	:	

This is a decision on the Request to Withdraw as attorney or agent of record under 37 C.F.R. § 1.36(b), filed January 24, 2006.

The request is **APPROVED**.

A grantable request to withdraw as attorney/agent of record must be signed by every attorney/agent seeking to withdraw or contain a clear indication that one attorney is signing on behalf of another/others. A request to withdraw will not be approved unless at least 30 (thirty) days would remain between the date of approval and the later of the expiration date of a time to file a response or the expiration date of the maximum time period which can be extended under 37 C.F.R. § 1.136(a).

The request was signed by A. Jose Cortina on behalf of all attorneys of record.

Applicant is reminded that there is no attorney of record at this time.

The correspondence address of record remains unchanged.

Telephone inquiries concerning this decision should be directed to April Wise at 571-272-1642.

Denise Pothier
Petitions Examiner
Office of Petitions

UNITED STATES PATENT AND TRADEMARK OFFICE

Commissioner for Patents
United States Patent and Trademark Office
P.O. Box 1450
Alexandria, VA 22313-1450
www.uspto.gov

BRACEWELL & PATTERSON, LLP
P. O. BOX 61389
HOUSTON, TX 77208-1389

COPY MAILED

SEP 13 2004

OFFICE OF PETITIONS

In re Application of :
Andre Sirilutporn Chan, et al. :
Application No. 10/811,682 :
Filed: March 29, 2004 :
Attorney Docket No. HSJ920030066US3 :

ON PETITION

This is a notice regarding your request for acceptance of a fee deficiency submission under 37 CFR 1.28. On September 1, 1998, the Court of Appeals for the Federal Circuit held that 37 CFR 1.28(c) is the sole provision governing the time for correction of the erroneous payment of the issue fee as a small entity. **See DH Technology v. Synergystex International, Inc. 154 F.3d 1333, 47 USPQ2d 1865 (Fed. Cir. Sept. 1, 1998).**

The Office no longer investigates or rejects original or reissue applications under 37 CFR 1.56. **1098 Off. Gaz. Pat. Office 502 (January 3, 1989)**. Therefore, nothing in this Notice is intended to imply that an investigation was done.

Your fee deficiency submission under 37 CFR 1.28 is hereby **ACCEPTED**.

Telephone inquiries concerning this decision should be directed to the undersigned at (703) 306-5594.

Retta Williams

Retta Williams
Petitions Examiner
Office of Petitions
Office of the Deputy Commissioner
for Patent Examination Policy

UNITED STATES PATENT AND TRADEMARK OFFICE

Commissioner for Patents
United States Patent and Trademark Office
P.O. Box 1450
Alexandria, VA 22313-1450
www.uspto.gov

NOV - 8 2004

MAILED

NOV - 8 2004

OFFICE OF THE DIRECTOR
TC 3600

GREGORY T. ZALECKI
12900 Hall Road
Suite 401
Sterling Heights, MI 48313

In re application of Dale C. H. Nevison Application No. 10/811,688 Filed: March 29, 2004 For: MAT PERIMETER SYSTEM	: : : :	**DECISION ON PETITION TO MAKE SPECIAL (APPLICANT'S AGE)**

This is a decision on the petition submitted on March 29, 2004, under 37 CFR 1.102 (c) to make the above-identified application special under the accelerated examination procedure set forth in MPEP 708.02, Section IV: Applicant's Age.

The petition is **GRANTED**.

An application may be accorded special status upon the filing of a petition providing evidence showing that the applicant is at least 65 years old. Such a showing may be provided by evidence such as a birth certificate or a statement from the applicant.

The evidence submitted with the petition is a declaration signed by Mr. Nevison indicating that he is at least 65 years of age.

The examiner is directed (1) to make an interference search for possible interfering applications, (2) to promptly examine this application out of turn, and (3) if any interfering application is discovered, to examine such application simultaneously and state in the first official letter of such application that it is being taken out of turn because of a possible interference.

Petitioner is advised that this application will continue to be special, throughout its entire prosecution and pendency, including interference or appeal, if any, only if petitioner makes a prompt ***bona fide*** effort, in response to each Office action, to place the application in condition for allowance, even if it is necessary to conduct an interview with the examiner to accomplish this purpose.

SUMMARY: Petition to Make Special **Granted.**

Steven N. Meyers
Special Programs Examiner
Patent Technology Center 3600
(703) 308-3868

SNM/pav: 11/01/04

UNITED STATES PATENT AND TRADEMARK OFFICE

Commissioner for Patents
United States Patent and Trademark Office
P.O. Box 1450
Alexandria, VA 22313-1450
www.uspto.gov

COLGATE-PALMOLIVE COMPANY
909 RIVER ROAD
PISCATAWAY, NJ 08855

COPY MAILED

DEC 2 4 2008

In re Application of	:	
Nebojsa Milanovich, et al.	:	
Application No. 10/811,724	:	ON PETITION
Filed: March 29, 2004	:	
Attorney Docket No. 7095-00	:	

This is a decision on the petition under 37 CFR 1.137(b), filed February 25, 2008, to revive the above-identified application.

The petition is **DISMISSED**.

Any request for reconsideration of this decision must be submitted within TWO (2) MONTHS from the mail date of this decision. Extensions of time under 37 CFR 1.136(a) are permitted. The reconsideration request should include a cover letter entitled "Renewed Petition under 37 CFR 1.137(b)." This is **not** a final agency action within the meaning of 5 U.S.C. § 704.

This application became abandoned for failure to timely reply to the non-final Office action mailed May 18, 2007, which set a three month shortened statutory period for reply. No extensions of time having been obtained pursuant to 37 CFR 1.136(a), this application became abandoned on August 19, 2007. A Notice of Abandonment was subsequently mailed on February 19, 2008. In response, on February 25, 2008, the present petition was filed.

A grantable petition under 37 CFR 1.137(b) must be accompanied by: (1) the required reply, unless previously filed; (2) the petition fee as set forth in 37 CFR 1.17(m); (3) a statement that the entire delay in filing the required reply from the due date for the reply until the filing of a grantable petition pursuant to 37 CFR 1.137(b) was unintentional; and (4) any terminal disclaimer (and fee as set forth in 37 CFR 1.20(d)) required by 37 CFR 1.137(c). Where there is a question as to whether either the abandonment or the delay in filing a petition under 37 CFR 1.137 was unintentional, the Director may require additional information. See MPEP 711.03(c)(II)(C) and (D).

The present petition lacks item (1). No response was filed to the outstanding Office action. Accordingly, the petition cannot be granted at this time.

Further correspondence with respect to this matter should be delivered through one of the following mediums:

By mail:	Mail Stop PETITIONS Commissioner for Patents Post Office Box 1450 Alexandria, VA 22313-1450
By hand:	Customer Service Window Mail Stop Petitions Randolph Building 401 Dulany Street Alexandria, VA 22314
By fax:	(571) 273-8300 ATTN: Office of Petitions
By internet:	EFS-Web[1]

Any questions concerning this matter may be directed to the undersigned at (571) 272-3204.

Sherry D. Brinkley
Petitions Examiner
Office of Petitions

[1] www.uspto.gov/ebc/efs_help.html (for help using EFS-Web call the Patent Electronic Business Center at (866) 217-9197)

UNITED STATES PATENT AND TRADEMARK OFFICE

Commissioner for Patents
United States Patent and Trademark Office
P.O. Box 1450
Alexandria, VA 22313-1450
www.uspto.gov

COPY MAILED

MAR 2 5 2009

OFFICE OF PETITIONS

COLGATE-PALMOLIVE COMPANY
909 RIVER ROAD
PISCATAWAY, NJ 08855

In re Application of :
Nebojsa Milanovich, et al. :
Application No. 10/811,724 : ON PETITION
Filed: March 29, 2004 :
Attorney Docket No. 7095-00 :

This is a decision on the renewed petition, filed January 15, 2009, to revive the above-identified application under the provisions of 37 CFR 1.137(b).

The petition is **GRANTED**.

The application became abandoned for failure to reply in a timely manner to the non-final Office action mailed, May 18, 2007, which set a shortened statutory period for reply of three (3) months. No extension of time under the provisions of 37 CFR 1.136(a) was obtained. Accordingly, the application became abandoned on August 19, 2007. A Notice of Abandonment was mailed on February 19, 2008. On February 25, 2008 a petition under 37 CFR 1.137(b) was filed; however, the petition was dismissed by a decision mailed December 24, 2008. In response, on January 15, 2009, the present petition was filed.

The petition satisfies the conditions for revival pursuant to the provisions of 37 CFR 1.137(b) in that petitioner has supplied (1) the reply in the form of an amendment; (2) the petition fee of $1,540[1]; and (3) an adequate statement of unintentional delay.

The application is being referred to Technology Center AU 3732 for appropriate action by the Examiner in the normal course of business on the response received January 15, 2009.

Telephone inquiries concerning this decision should be directed to the undersigned at (571) 272-3204. Inquiries relating to further prosecution should be directed to the Technology Center.

Sherry D. Brinkley
Petitions Examiner
Office of Petitions

[1] It is noted that petitioner submitted a $1620 petition fee with the present petition. Since there is no further petition fee due on a renewed petition, the $1,620 petition fee is being refunded to Counsel's deposit account.

UNITED STATES PATENT AND TRADEMARK OFFICE

Commissioner for Patents
United States Patent and Trademark Office
P.O. Box 1450
Alexandria, VA 22313-1450
www.uspto.gov

Orum & Roth LLC
53 W Jackson Boulevard
Chicago IL 60604-3606

COPY MAILED

OCT 10 2006

OFFICE OF PETITIONS

In re Application of
CONWELL, et al.
Application No. 10/811,732
Filed: March 29, 2004
Attorney Docket No. 13814

DECISION ON PETITION
TO WITHDRAW
FROM RECORD

This is a decision on the Request to Withdraw as attorney or agent under 37 C.F.R. § 1.36(b) or 37 C.F.R. § 10.40 filed July 16, 2006.

The request is **APPROVED**.

A review of the file record indicates that Catherine L. Gemrich: (1) does not have power of attorney in this patent application; and (2) has been employed or otherwise engaged in the proceedings in this patent application. In view of the present decision, Catherine L. Gemrich has been withdrawn from the present application and may not prepare or submit papers under 37 C.F.R. § 1.34, or correspond in any manner in this application unless appointed in an acceptable power of attorney under 37 C.F.R. § 1.32(b).

Applicant is reminded that there is no attorney of record at this time.

There is no outstanding Office action that requires a reply from the applicant.

The correspondence address remains unchanged.

Telephone inquires concerning this decision should be directed to Patricia Volpe at 571-272-6825.

for David Bucci
Petitions Examiner
Office of Petitions

UNITED STATES PATENT AND TRADEMARK OFFICE

Commissioner for Patents
United States Patent and Trademark Office
P.O. Box 1450
Alexandria, VA 22313-1450
www.uspto.gov

SEED INTELLECTUAL PROPERTY LAW GROUP PLLC
701 FIFTH AVENUE SUITE 5400
SEATTLE WA 98104-7092

COPY MAILED

MAR 12 2008

OFFICE OF PETITIONS

In re Application of	:	
Conwell, et al.	:	
Application No. 10/811,732	:	ON PETITION
Filed: March 29, 2004	:	
Attorney Docket No. 480062.799D1	:	

This is a decision on the petition to revive under 37 CFR 1.137(a), filed March 4, 2008.

The petition under 37 CFR 1.137(a) is **GRANTED**.

The above-identified application became abandoned for failure to reply to the non-final Office action mailed June 11, 2007. This Office action set a shortened statutory period for reply of three (3) months. No reply having been received, the application became abandoned on September 12, 2007. A Notice of Abandonment was mailed on December 27, 2007.

A grantable petition under 37 CFR 1.137(a) must be accompanied by: (1) the required reply, unless previously filed; (2) the petition fee as set forth in 37 CFR 1.17(l); (3) a showing to the satisfaction of the Commissioner that the entire delay in filing the required reply from the due date for the reply until the filing of a grantable petition pursuant to 37 CFR 1.137(a) was unavoidable; and (4) any terminal disclaimer (and fee as set forth in 37 CFR 1.20(d)) required pursuant to 37 CFR 1.137(d). Decisions on reviving abandoned applications on the basis of "unavoidable" delay have adopted the reasonably prudent

person standard in determining if the delay was unavoidable:

> The word 'unavoidable' . . . is applicable to ordinary human affairs, and requires no more or greater care or diligence than is generally used and observed by prudent and careful men in relation to their most important business. It permits them in the exercise of this care to rely upon the ordinary and trustworthy agencies of mail and telegraph, worthy and reliable employees, and such other means and instrumentalities as are usually employed in such important business. If unexpectedly, or through the unforeseen fault or imperfection of these agencies and instrumentalities, there occurs a failure, it may properly be said to be unavoidable, all other conditions of promptness in its rectification being present.[1]

Moreover, a petition cannot be granted where a petitioner has failed to meet his or her burden of establishing that the delay was "unavoidable."[2]

Petitioner argues that the Office action was mailed to the incorrect address. A review of the application file reveals the presence of a Revocation and Power of Attorney and Change of Correspondence Address, filed on March 8,2007, directing the Office to mail all future correspondence to Seed Intellectual Properly Law Group. However, the Office action was mailed to the prior address of record.

In view of the above, it is concluded that petitioner has met his burden of establishing that the delay was unavoidable.

The application is being forwarded to Group Art Unit 3772 for consideration of the Amendment, filed March 4, 2008.

Telephone inquiries concerning this decision should be directed to the undersigned at (571)272-3207.

Cliff Congo
Petitions Attorney
Office of Petitions

---

[1] In re Mattullath, 38 App. D.C. 497, 514-15 (1912)(quoting Ex parte Pratt, 1887 Dec. Comm'r Pat. 31, 32-33 (1887)); see also Winkler v. Ladd, 221 F. Supp. 550, 552, 138 USPQ 666, 167-68 (D.D.C. 1963), aff'd, 143 USPQ 172 (D.C. Cir. 1963); Ex parte Henrich, 1913 Dec. Comm'r Pat. 139, 141 (1913).

[2] Haines v. Quigg, 673 F. Supp. 314, 316-17, 5 USPQ2d 1130, 1131-32 (N.D. Ind. 1987).

UNITED STATES PATENT AND TRADEMARK OFFICE

UNITED STATES DEPARTMENT OF COMMERCE
United States Patent and Trademark Office
Address: COMMISSIONER FOR PATENTS
P.O. Box 1450
Alexandria, Virginia 22313-1450
www.uspto.gov

APPL NO.	FILING OR 371 (c) DATE	ART UNIT	FIL FEE REC'D	ATTY.DOCKET NO	DRAWINGS	TOT CLMS	IND CLMS
10/811,749	03/29/2004	2173	856	50037.223US01	6	20	4

CONFIRMATION NO. 2821

CORRECTED FILING RECEIPT

OC000000014143421

27488
MICROSOFT CORPORATION
C/O MERCHANT & GOULD, L.L.C.
P.O. BOX 2903
MINNEAPOLIS, MN 55402-0903

Date Mailed: 10/20/2004

Receipt is acknowledged of this regular Patent Application. It will be considered in its order and you will be notified as to the results of the examination. Be sure to provide the U.S. APPLICATION NUMBER, FILING DATE, NAME OF APPLICANT, and TITLE OF INVENTION when inquiring about this application. Fees transmitted by check or draft are subject to collection. Please verify the accuracy of the data presented on this receipt. **If an error is noted on this Filing Receipt, please write to the Office of Initial Patent Examination's Filing Receipt Corrections, facsimile number 703-746-9195. Please provide a copy of this Filing Receipt with the changes noted thereon. If you received a "Notice to File Missing Parts" for this application, please submit any corrections to this Filing Receipt with your reply to the Notice. When the USPTO processes the reply to the Notice, the USPTO will generate another Filing Receipt incorporating the requested corrections (if appropriate).**

Applicant(s)

Daniel G. O'Neil, Seattle, WA;
Marc W. Todd, Redmond, WA;
Autumn L. Stroupe, North Bend, WA;

Assignment For Published Patent Application

Microsoft Corporation, Redmond, WA

Power of Attorney: The patent practitioners associated with Customer Number **27488**.

Domestic Priority data as claimed by applicant

Foreign Applications

If Required, Foreign Filing License Granted: 06/07/2004

The country code and number of your priority application, to be used for filing abroad under the Paris Convention, is US10/811,749

Projected Publication Date: 09/29/2005

Non-Publication Request: No

Early Publication Request: No

Title

Scenario synchronism between a primary display and a secondary display of an electronic device

Preliminary Class

345

LICENSE FOR FOREIGN FILING UNDER
Title 35, United States Code, Section 184
Title 37, Code of Federal Regulations, 5.11 & 5.15

GRANTED

The applicant has been granted a license under 35 U.S.C. 184, if the phrase "IF REQUIRED, FOREIGN FILING LICENSE GRANTED" followed by a date appears on this form. Such licenses are issued in all applications where the conditions for issuance of a license have been met, regardless of whether or not a license may be required as set forth in 37 CFR 5.15. The scope and limitations of this license are set forth in 37 CFR 5.15(a) unless an earlier license has been issued under 37 CFR 5.15(b). The license is subject to revocation upon written notification. The date indicated is the effective date of the license, unless an earlier license of similar scope has been granted under 37 CFR 5.13 or 5.14.

This license is to be retained by the licensee and may be used at any time on or after the effective date thereof unless it is revoked. This license is automatically transferred to any related applications(s) filed under 37 CFR 1.53(d). This license is not retroactive.

The grant of a license does not in any way lessen the responsibility of a licensee for the security of the subject matter as imposed by any Government contract or the provisions of existing laws relating to espionage and the national security or the export of technical data. Licensees should apprise themselves of current regulations especially with respect to certain countries, of other agencies, particularly the Office of Defense Trade Controls, Department of State (with respect to Arms, Munitions and Implements of War (22 CFR 121-128)); the Office of Export Administration, Department of Commerce (15 CFR 370.10 (j)); the Office of Foreign Assets Control, Department of Treasury (31 CFR Parts 500+) and the Department of Energy.

NOT GRANTED

No license under 35 U.S.C. 184 has been granted at this time, if the phrase "IF REQUIRED, FOREIGN FILING LICENSE GRANTED" DOES NOT appear on this form. Applicant may still petition for a license under 37 CFR 5.12, if a license is desired before the expiration of 6 months from the filing date of the application. If 6 months has lapsed from the filing date of this application and the licensee has not received any indication of a secrecy order under 35 U.S.C. 181, the licensee may foreign file the application pursuant to 37 CFR 5.15(b).

SPE: P. Hassanzadeh

SPE RESPONSE FOR CERTIFICATE OF CORRECTION

Paper No.: _____

DATE : 3/6/07

TO SPE OF : ART UNIT 1763

SUBJECT : Request for Certificate of Correction for Appl. No.: 10/811,758 Patent No.: 7129122

Please respond to this request for a certificate of correction within 7 days.

Please review the requested changes/corrections as shown in the **COCIN** document(s) in the IFW application image. No new matter should be introduced, nor should the scope or meaning of the claims be changed.

Please complete the response (see below) and forward the completed response to scanning using document code **COCX**.

Lamonte M. Newsome
Certificates of Correction Branch
703-308-9390 ext. 112

Thank You For Your Assistance

The request for issuing the above-identified correction(s) is hereby:
Note your decision on the appropriate box.

- ☒ **Approved** — All changes apply.
- ☐ **Approved in Part** — Specify below which changes **do not** apply.
- ☐ **Denied** — State the reasons for denial below.

Comments: approved.

PL

PARVIZ HASSANZADEH
SUPERVISORY PATENT EXAMINER
SPE

1763
Art Unit

UNITED STATES PATENT AND TRADEMARK OFFICE

Commissioner for Patents
United States Patent and Trademark Office
P.O. Box 1450
Alexandria, VA 22313-1450
www.uspto.gov

KNOBBE MARTENS OLSON & BEAR LLP
2040 MAIN STREET
FOURTEENTH FLOOR
IRVINE CA 92614

COPY MAILED

AUG 0 9 2007

OFFICE OF PETITIONS

In re Patent No. 6,866,281 :
Issue Date: March 15, 2005 :
Application No. 10/811,765 : NOTICE
Filed: March 29, 2004 :
Attorney Docket No. SPECB1C1.128C1 :

This is a notice regarding your request, filed November 30, 2006, for acceptance of a fee deficiency submission under 37 CFR 1.28.

The Office no longer investigates or rejects original or reissue applications under 37 CFR 1.56. **1098 Off. Gaz. Pat. Office 502 (January 3, 1989)**. Therefore, nothing in this Notice is intended to imply that an investigation was done.

Your fee deficiency submission under 37 CFR 1.28 is hereby **ACCEPTED**.

This file is no longer entitled to small entity status. Accordingly, all future fees paid in this file must be paid at the large entity rate, absent further notification from a proper party of a change in status. *See* 37 CFR 1.27(c)(2).

Inquiries related to this communication should be directed to the undersigned at (571) 272-3218.

Frances Hicks
Petitions Examiner
Office of Petitions

UNITED STATES PATENT AND TRADEMARK OFFICE

Commissioner for Patents
United States Patent and Trademark Office
P.O. Box 1450
Alexandria, VA 22313-1450
www.uspto.gov

HONEYWELL INTERNATIONAL INC.
101 COLUMBIA ROAD
P O BOX 2245
MORRISTOWN, NJ 07962-2245

COPY MAILED
SEP 0 5 2006
OFFICE OF PETITIONS

In re Application of :
Thomas R. Keyser. :
Application No. 10/811,767 : ON PETITION
Filed: March 29, 2004 :
Attorney Docket No. **P04,0000** :

This is a decision on the petition under 37 CFR 1.78(a)(3), filed March 6, 2006, to accept an unintentionally delayed claim under 35 U.S.C §120 for the benefit of priority to the prior –filed non-provisional application set forth in the amendment filed concurrently with the instant petition.

A petition for acceptance of a claim for late priority under 37 CFR 1.78(a)(3) is only applicable to those applications filed on, or after, November 29, 2000 and after the expiration of the period specified in 37 CFR 1.78(a)(2)(ii). In addition, the petition under 37 CFR 1.78(a)(3) must be accompanied by:

1. the reference required by 35 U.S.C § 120 and 37 CFR § 1.78(a)(2)(i) of the prior-filed application, unless previously submitted;

2. the surcharge set forth in § 1.17(t), and

3. a statement that the entire delay between the date the claim was due under 37 CFR 1.78(a)(2)(ii) and the date the claim was filed was unintentional. The Director may require additional information where there is a question whether the delay was unintentional.

All of the requirements being met, the petition to accept an unintentionally delayed claim for priority under 35 U.S.C. § 120 is **GRANTED**.

The granting of the petition to accept the delayed benefit claim to the prior-filed application under 37 CFR 1.78(a)(3) should not be construed as meaning that this application is entitled to the benefit of the prior-filed application. In order for the instant application to be entitled to the benefit of the prior-filed application, all other requirements under 35 U.S.C. § 120 and 37 CFR 1.78(a)(1) and (a)(2) must be met. Similarly, the fact that the corrected Filing Receipt accompanying this decision on petition includes the prior-filed application should not be construed as meaning that applicant is entitled to the claim for benefit of priority to the prior-filed application noted thereon.

Accordingly, the examiner will, in due course, consider this benefit claim and determine whether the instant application is entitled to the benefit of the earlier filing date.

A corrected Filing Receipt, which includes the priority claim to the prior-filed application, accompanies this decision on petition.

Any inquiries concerning this decision may be directed to Kenya A. McLaughlin, Petitions Attorney, at (571) 272-3222. All other inquiries concerning either the examination procedures or status of the application should be directed to the Technology Center.

This matter is being referred to Technology Center 2800, Art Unit 2822 for appropriate action on the amendment filed March 6, 2006, including consideration by the examiner of applicant's entitlement to claim benefit of priority under 35 U.S.C. §120 to the prior-filed non-provisional application.

Frances Hicks
Lead Petitions Examiner
Office of Petitions

Enclosure: Corrected Filing Receipt

UNITED STATES PATENT AND TRADEMARK OFFICE

UNITED STATES DEPARTMENT OF COMMERCE
United States Patent and Trademark Office
Address: COMMISSIONER FOR PATENTS
P.O. Box 1450
Alexandria, Virginia 22313-1450
www.uspto.gov

APPL NO.	FILING OR 371 (c) DATE	ART UNIT	FIL FEE REC'D	ATTY.DOCKET NO	DRAWINGS	TOT CLMS	IND CLMS
10/811,767	03/29/2004	2822	1238	P04,0000 (H0004213,SBE 16	4	46	3

CONFIRMATION NO. 4508

CORRECTED FILING RECEIPT

OC000000020096421

000128
HONEYWELL INTERNATIONAL INC.
101 COLUMBIA ROAD
P O BOX 2245
MORRISTOWN, NJ 07962-2245

Date Mailed: 08/18/2006

Receipt is acknowledged of this regular Patent Application. It will be considered in its order and you will be notified as to the results of the examination. Be sure to provide the U.S. APPLICATION NUMBER, FILING DATE, NAME OF APPLICANT, and TITLE OF INVENTION when inquiring about this application. Fees transmitted by check or draft are subject to collection. Please verify the accuracy of the data presented on this receipt. **If an error is noted on this Filing Receipt, please mail to the Commissioner for Patents P.O. Box 1450 Alexandria Va 22313-1450. Please provide a copy of this Filing Receipt with the changes noted thereon. If you received a "Notice to File Missing Parts" for this application, please submit any corrections to this Filing Receipt with your reply to the Notice. When the USPTO processes the reply to the Notice, the USPTO will generate another Filing Receipt incorporating the requested corrections (if appropriate).**

Applicant(s)

Thomas R. Keyser, Plymouth, MN;

Assignment For Published Patent Application

Honeywell International Inc.

Power of Attorney:

William Anderson--28147
Larry Palguta--29575
Miriam Jackson--33911
Loria Yeadon--35063

Domestic Priority data as claimed by applicant

This application is a CIP of 10/755,212 01/12/2004

Foreign Applications

If Required, Foreign Filing License Granted: 06/08/2004

The country code and number of your priority application, to be used for filing abroad under the Paris Convention, is US10/811,767

Projected Publication Date: Not Applicable

Non-Publication Request: No

Early Publication Request: No

Title

Silicon optoelectronic device

Preliminary Class

438

PROTECTING YOUR INVENTION OUTSIDE THE UNITED STATES

Since the rights granted by a U.S. patent extend only throughout the territory of the United States and have no effect in a foreign country, an inventor who wishes patent protection in another country must apply for a patent in a specific country or in regional patent offices. Applicants may wish to consider the filing of an international application under the Patent Cooperation Treaty (PCT). An international (PCT) application generally has the same effect as a regular national patent application in each PCT-member country. The PCT process **simplifies** the filing of patent applications on the same invention in member countries, but **does not result** in a grant of "an international patent" and does not eliminate the need of applicants to file additional documents and fees in countries where patent protection is desired.

Almost every country has its own patent law, and a person desiring a patent in a particular country must make an application for patent in that country in accordance with its particular laws. Since the laws of many countries differ in various respects from the patent law of the United States, applicants are advised to seek guidance from specific foreign countries to ensure that patent rights are not lost prematurely.

Applicants also are advised that in the case of inventions made in the United States, the Director of the USPTO must issue a license before applicants can apply for a patent in a foreign country. The filing of a U.S. patent application serves as a request for a foreign filing license. The application's filing receipt contains further information and guidance as to the status of applicant's license for foreign filing.

Applicants may wish to consult the USPTO booklet, "General Information Concerning Patents" (specifically, the section entitled "Treaties and Foreign Patents") for more information on timeframes and deadlines for filing foreign patent applications. The guide is available either by contacting the USPTO Contact Center at 800-786-9199, or it can be viewed on the USPTO website at http://www.uspto.gov/web/offices/pac/doc/general/index.html.

For information on preventing theft of your intellectual property (patents, trademarks and copyrights), you may wish to consult the U.S. Government website, http://www.stopfakes.gov. Part of a Department of Commerce initiative, this website includes self-help "toolkits" giving innovators guidance on how to protect intellectual property in specific countries such as China, Korea and Mexico. For questions regarding patent enforcement issues, applicants may call the U.S. Government hotline at 1-866-999-HALT (1-866-999-4158).

LICENSE FOR FOREIGN FILING UNDER
Title 35, United States Code, Section 184
Title 37, Code of Federal Regulations, 5.11 & 5.15

GRANTED

The applicant has been granted a license under 35 U.S.C. 184, if the phrase "IF REQUIRED, FOREIGN FILING LICENSE GRANTED" followed by a date appears on this form. Such licenses are issued in all applications where the conditions for issuance of a license have been met, regardless of whether or not a license may be required as set forth in 37 CFR 5.15. The scope and limitations of this license are set forth in 37 CFR 5.15(a) unless an earlier license has been issued under 37 CFR 5.15(b). The license is subject to revocation upon written notification. The

date indicated is the effective date of the license, unless an earlier license of similar scope has been granted under 37 CFR 5.13 or 5.14.

This license is to be retained by the licensee and may be used at any time on or after the effective date thereof unless it is revoked. This license is automatically transferred to any related applications(s) filed under 37 CFR 1.53(d). This license is not retroactive.

The grant of a license does not in any way lessen the responsibility of a licensee for the security of the subject matter as imposed by any Government contract or the provisions of existing laws relating to espionage and the national security or the export of technical data. Licensees should apprise themselves of current regulations especially with respect to certain countries, of other agencies, particularly the Office of Defense Trade Controls, Department of State (with respect to Arms, Munitions and Implements of War (22 CFR 121-128)); the Bureau of Industry and Security, Department of Commerce (15 CFR parts 730-774); the Office of Foreign Assets Control, Department of Treasury (31 CFR Parts 500+) and the Department of Energy.

NOT GRANTED

No license under 35 U.S.C. 184 has been granted at this time, if the phrase "IF REQUIRED, FOREIGN FILING LICENSE GRANTED" DOES NOT appear on this form. Applicant may still petition for a license under 37 CFR 5.12, if a license is desired before the expiration of 6 months from the filing date of the application. If 6 months has lapsed from the filing date of this application and the licensee has not received any indication of a secrecy order under 35 U.S.C. 181, the licensee may foreign file the application pursuant to 37 CFR 5.15(b).

UNITED STATES PATENT AND TRADEMARK OFFICE

Commissioner for Patents
United States Patent and Trademark Office
P.O. Box 1450
Alexandria, VA 22313-1450
www.uspto.gov
DIW 01-05

CHRISTENSEN, O'CONNOR, JOHNSON, KINDNESS, PLLC
1420 FIFTH AVENUE
SUITE 2800
SEATTLE WA 98101-2347

COPY MAILED

JAN 14 2005

OFFICE OF PETITIONS

In re Application of Banik, Boulais, Couvillon, Chin, Anderson, Macnamara, Fantone, Braunstein, Orband, Saber, Hunter, Coppola, Kirouac, Clark, Weisman, Mason, Mehta, and Greaves Application No. 10/811,781 Filed: 29 March, 2004 Atty Docket No. BSEN122032	DECISION ACCORDING STATUS UNDER 37 CFR 1.47(a)

This is in response to the petition filed under 37 CFR 1.47(a) on 13 December, 2004.

The petition is **GRANTED**.

The above-identified application was filed on 29 March, 2004, without an executed oath or declaration. Accordingly, on 8 June, 2004, Initial Patent Examination Division mailed a Notice to File Missing Parts of Nonprovisional Application, requiring the statutory basic filing fee, additional claim fee(s), an executed oath or declaration and a surcharge for their late filing. A two (2) month period for reply was set.

Accordingly, on 13 December, 2004 (certificate of mailing date 8 December, 2004), petitioners filed a four month extension of time, accompanied by the present petition, fee, statutory basic filing fee, additional claim fees, surcharge, and an executed declaration naming Michael S. Banik, Dennis R. Boulais, Lucien Alfred Couvillon, Albert C.C. Chin, Frank J. Anderson, Stephen D. Fantone, Daniel J. Braunstein, Daniel G. Orband, Michael P. Saber, Ian W. Hunter, Patsy Anthony Coppola, Andrew Peter Kirouac, Richard Joseph Clark, Richard M. Weisman, Timothy James Mason, Neil Rasik Mehta, and Amna Elona Rathore Greaves as joint inventors and signed by all joint inventors except Clark on behalf of themselves and joint inventor Clark.

Petitioners have shown that the non-signing inventor, Richard Joseph Clark, has refused to join in the filing of the above-identified application after having been sent a copy of the application papers. Specifically, petitioners have established that a copy of the application was sent to the non-signing inventor. However, the non-signing inventor failed to return an executed declaration listing him as a joint inventor along with the above-named joint inventors.

The above-identified application and papers have been reviewed and found in compliance with 37 CFR 1.47(a). This application is hereby accorded Rule 1.47(a) status.

As provided in Rule 1.47(c), this Office will forward notice of this application's filing to the non-signing inventor at the address given in the Declaration. Notice of the filing of this application will also be published in the Official Gazette.

After this decision is mailed, the application will be referred to Technology Center Art Unit 3739 for examination in due course.

Telephone inquiries related to this decision should be directed to the undersigned at 571-272-3231.

D Wood

Douglas I. Wood
Senior Petitions Attorney
Office of Petitions

UNITED STATES PATENT AND TRADEMARK OFFICE

Commissioner for Patents
United States Patent and Trademark Office
P.O. Box 1450
Alexandria, VA 22313-1450
www.uspto.gov
DIW 01-05

Richard Clark
4 Lee Ann Drive
Norfolk MA 02056

COPY MAILED

JAN 14 2005

OFFICE OF PETITIONS

In re Application of
Banik et al.
Application No. 10/811,781
Filed: 29 March, 2004
For: Single Use Endoscopic Imaging System

Dear Mr. Clark:

You are named as a joint inventor in the above identified United States patent application, filed under the provisions of 35 U.S.C. 116 (United States Code), and 37 CFR 1.47(a), Rules of Practice in Patent Cases. Should a patent be granted on the application you will be designated therein as a joint inventor.

As a named inventor you are entitled to inspect any paper in the file wrapper of the application, order copies of all or any part thereof (at a prepaid cost per 37 CFR 1.19) or make your position of record in the application. Alternatively, you may arrange to do any of the preceding through a registered patent attorney or agent presenting written authorization from you. If you care to join the application, counsel of record (see below) would presumably assist you. Joining in the application would entail the filing of an appropriate oath or declaration by you pursuant to 37 CFR 1.63.

Telephone inquiries regarding this communication should be directed to the undersigned at 571/272-3231. Requests for information regarding your application should be directed to the File Information Unit at 703/308-2733. Information regarding how to pay for and order a copy of the application, or a specific paper in the application, should be directed to Certification Division at 703/308-9726 or 1-800-972-6382 (outside the Washington D.C. area).

D Wood

Douglas I. Wood
Senior Petitions Attorney
Office of Petitions

CHRISTENSEN, O'CONNOR, JOHNSON, KINDNESS, PLLC
1420 FIFTH AVENUE
SUITE 2800
SEATTLE WA 98101-2347

UNITED STATES PATENT AND TRADEMARK OFFICE

Commissioner for Patents
United States Patent and Trademark Office
P.O. Box 1450
Alexandria, VA 22313-1450
www.uspto.gov

PANORAMA LABS PTY. LTD.
C/O PATENT LAW OFFICES OF MICHAEL E. WOODS
3433 WHEELING DRIVE
SANTA CLARA CA 95051

COPY MAILED

SEP 06 2007

OFFICE OF PETITIONS

In re Application of	:	
Sutherland C. ELLWOOD	:	
Application No. 10/811,782	:	ON PETITION
Filed: March 29, 2004	:	
Attorney Docket No. 20028-7003	:	

This is a decision on the petition under 37 CFR 1.137(b), filed July 23, 2007, to revive the above-identified application.

The petition is **GRANTED**.

The above-identified application became abandoned for failure to reply to the Notice of Non-Compliant Amendment mailed November 20, 2006, which set a shortened statutory period for reply of one (1) month. No extensions of time under the provisions of 37 CFR 1.136(a) were obtained. Accordingly, the above-identified application became abandoned on December 21, 2006.

The petition satisfies the conditions for revival pursuant to the provisions of 37 CFR 1.137(b) in that (1) the reply in the form of a response to a non-final Office action; (2) the petition fee of $750; and (3) the required statement of unintentional delay have been received. Accordingly, the reply to the Notice of Non-Compliant Amendment mailed November 20, 2006 is accepted as having been unintentionally delayed.

Telephone inquiries concerning this decision should be directed to Brian Sines at (571) 272-6051 or in his absence, the undersigned at (571) 272-7099.

The application file is being referred to Technology Center AU 2871 for appropriate action on the concurrently filed Request for Continued Examination.

David Bucci
Petitions Examiner
Office of Petitions

UNITED STATES PATENT AND TRADEMARK OFFICE

Commissioner for Patents
United States Patent and Trademark Office
P.O. Box 1450
Alexandria, VA 22313-1450
www.uspto.gov

KNOBBE MARTENS OLSON & BEAR, LLP
2040 MAIN STREET
FOURTEENTH FLOOR
IRVINE, CA 92614

COPY MAILED

JUN 14 2007

OFFICE OF PETITIONS

NOTICE

In re Patent No. 6,991,076 :
Issue Date: January 31, 2006 :
Application No. 10/811,784 :
Filed: March 29, 2004 :
Patentee(s): Michael McAndrews :

This is a notice regarding your request for acceptance of a fee deficiency submission under 37 CFR 1.28, filed on November 30, 2006. On September 1, 1998, the Court of Appeals for the Federal Circuit held that 37 CFR 1.28(c) is the sole provision governing the time for correction of the erroneous payment of the issue fee as a small entity. **See DH Technology v. Synergystex International, Inc. 154 F.3d 1333, 47 USPQ2d 1865 (Fed. Cir. Sept. 1, 1998).**

The Office no longer investigates or rejects original or reissue applications under 37 CFR 1.56. **1098 Off. Gaz. Pat. Office 502 (January 3, 1989)**. Therefore, nothing in this Notice is intended to imply that an investigation was done.

Your fee deficiency submission under 37 CFR 1.28 is hereby **ACCEPTED**. Therefore, status as a small entity has been removed and all future fees paid must be paid at the large entity rate.

Inquiries related to this communication should be directed to the undersigned at (571) 272-3226.

Andrea Smith
Petitions Examiner
Office of Petitions

UNITED STATES PATENT AND TRADEMARK OFFICE

Commissioner for Patents
United States Patent and Trademark Office
P.O. Box 1450
Alexandria, VA 22313-1450
www.uspto.gov

FROST BROWN TODD, LLC
2200 PNC Center
201 E. Fifth Street
Cincinnati, OH 45202-4182

COPY MAILED

MAY 16 2007

OFFICE OF PETITIONS

In re Application of	:	
Michael E. Rivir, et. al.	:	
Application No. 10/811,788	:	ON PETITION
Filed: March 29, 2004	:	
Attorney Docket No. 12920/507125	:	

This is a decision on the petition under 37 CFR 1.137(b), filed on February 12, 2007, to revive the above-identified application.

The application became abandoned for failure to respond to the non-final Office action mailed March 1, 2005. A Notice of Abandonment was mailed on September 13, 2005.

The petition satisfies the requirements of 37 CFR 1.137(b) in that petitioner has supplied (1) the reply in the form of an amendment; (2) the petition fee of $750; and (3) an adequate statement of unintentional delay. Therefore, the petition is **GRANTED**.

This application file is being referred to Technology Center Art Unit 3723, for review of the amendment filed with the instant petition.

Telephone inquiries concerning this decision should be directed to the undersigned at (571) 272-3226.

Andrea Smith
Petitions Examiner
Office of Petitions

UNITED STATES PATENT AND TRADEMARK OFFICE

Commissioner for Patents
United States Patent and Trademark Office
P.O. Box 1450
Alexandria, VA 22313-1450
www.uspto.gov

COPY MAILED

SEP 05 2007

OFFICE OF PETITIONS

BARLOW, JOSEPHS & HOLMES, LTD.
101 DYER STREET
5TH FLOOR
PROVIDENCE RI 02903

In re Application of	:	
Richard E. Swan	:	
Application No. 10/811,795	:	DECISION ON PETITION
Filed: March 29, 2004	:	
Attorney Docket No. A042 P00993-US1	:	

This is a decision on the petition under the unintentional provisions of 37 CFR 1.137(b), filed April 6, 2007, to revive the above-identified application.

The petition is **GRANTED**.

This application became abandoned for failure to timely pay the issue fee on or before February 15, 2007, as required by the Notice of Allowance and Fee(s) Due, mailed November 15, 2006. Accordingly, the date of abandonment of this application is February 16, 2007.

The petition satisfies the requirements of 37 CFR 1.137(b) in that petitioner has supplied (1) the reply in the form of payment of the issue fee of $700, (2) the petition fee of $750; and (3) a proper statement of unintentional delay.

Telephone inquiries concerning this decision should be directed to Terri Williams at (571) 272-2991.

This application is being referred to Publishing Division for processing into a patent.

Liana Walsh
Petitions Examiner
Office of Petitions

UNITED STATES PATENT AND TRADEMARK OFFICE

Commissioner for Patents
United States Patent and Trademark Office
P.O. Box 1450
Alexandria, VA 22313-1450
www.uspto.gov

LAW OFFICES OF DR MELVIN BLECHER
4329 VAN NESS ST, NW
WASHINGTON, DC 20016-5625

COPY MAILED

DEC 2 4 2008

In re Application of	:	
Theoharis C. Tehoharides	:	
Application No. 10/811,826	:	ON PETITION
Filed: March 30, 2004	:	
Attorney Docket No. 512275/148	:	

This is a decision on the petition under 37 CFR 1.137(b), filed September 24, 2008, to revive the above-identified application.

The petition is **GRANTED**.

The application became abandoned for failure to timely file a reply within the meaning of 37 CFR 1.113 to the final Office action mailed July 30, 2007. A Notice of Abandonment was mailed on March 26, 2008.The present petition was filed on September 24, 2008, including, *inter alia*, a Revocation of Power of Attorney.

The Revocation and Power Attorney filed September 24, 2008 is **not** acceptable, since the attached assignment references an application to which there is not proper priority claim. However, in accordance with 37 CFR 1.34(a), the signature of Colleen Superko appearing on the petition shall constitute a representation to the United States Patent and Trademark Office that she is authorized to represent the particular party on whose behalf she acts. A courtesy copy of this decision is being mailed to petitioner.

At present, the request to change the correspondence address filed September 24, 2008 will not be processed. If Attorney Superko desires to receive future correspondence regarding this application, the appropriate power of attorney or authorization of agent must be submitted. All future correspondence regarding this application file will be directed solely to the address of record.

The petition satisfies the requirements of 37 CFR 1.137(b) in that petitioner has supplied (1) the reply in the form of a Request for Continued Examination (RCE), including the fee of $405 and the submission required by 37 CFR 1.114; (2) the petition fee of $770; and (3) an adequate statement of unintentional delay[1].

[1] 37 CFR 1.137(b)(3) requires a statement that the entire delay in filing the required reply from the due date for the reply until the filing of a grantable petition pursuant to 37 CFR 1.137(b) was unintentional. While it is not apparent whether the person signing the statement of unintentional delay was in a position to have firsthand or direct knowledge of the facts and circumstances of the delay at issue, such statement is being treated as having been made as the result of a reasonable inquiry into the facts and circumstances of such delay. See 37 CFR 10.18(b) and Changes to Patent Practice and Procedure; Final Rule Notice, 62 Fed. Reg. 53131, 53178 (October 10, 1997), 1203 Off. Gaz. Pat. Office 63, 103 (October 21, 1997).

This application is being referred to Technology Center AU 1655 for processing of the RCE and for appropriate action by the Examiner in the normal course of business on the amendment submitted in accordance with 37 CFR 1.114.

Telephone inquiries concerning this decision should be directed to the undersigned at (571) 272-3204. Inquiries relating to further prosecution should be directed to the Technology Center.

Sherry D. Brinkley
Petitions Examiner
Office of Petitions

cc: COLLEEN SUPERKO
WILMER CUTLER PICKERING HALE
AND DORR LLP
60 STATE STREET
BOSTON, MA 02109

UNITED STATES PATENT AND TRADEMARK OFFICE

2 1 SEP 2009

Commissioner for Patents
United States Patent and Trademark Office
P.O. Box 1450
Alexandria, VA 22313-1450
www.uspto.gov

Colleen Superko
Wilmer Culter Pickering Hale and Dorr LLP
60 State Street
Boston, MA 02109

In re Application of Theoharides, Theoharis	: DECISION ON
Application No.: 10/811,826	:
Filed: 30 March 2004	: PETITION
Attorney Docket No.: 2003133.126US1	:
For: ANTI-INFLAMMATORY COMPOSITIONS FOR MULTIPLE SCLEROSIS	: UNDER 37 CFR 1.78(a)(3)

This is a decision on the petition under 37 CFR 1.78(a)(3), filed 13 February 2009., to accept an unintentionally delayed claim under 35 U.S.C. 120 for the benefit of priority to prior-filed non-provisional applications.

The petition is **DIMISSED**.

A petition for acceptance of a late claim for priority under 37 CFR 1.78(a)(3) is only applicable to those applications filed on or after November 29, 2000. Further, the petition is appropriate only after the expiration of the period specified in 37 CFR 1.78(a)(2)(ii). In addition, the petition under 37 CFR 1.78(a)(3) must be accompanied by:

(1) The reference required by 35 U.S.C. 120 and 37 CFR 1.78(a)(2)(i) of the prior-filed application, unless previously submitted;
(2) The surcharge set forth in § 1.17(t); and
(3) A statement that the entire delay between the date the claim was due under 37 CFR 1.78(a)(2)(ii) and the date the claim was filed was unintentional. The Director may require additional information where there is a question whether the delay was unintentional.

The petition does not satisfy item (1) above.

The amendment to the specification filed on 24 September 2008 is improper because it instructs the Office to delete a paragraph in the specification that does not exist. It is noted that the purported preliminary amendment to the specification filed on 30 March 2004 was not entered because the amendment was not in compliance with 37 CFR 1.121(h). Accordingly, the 24

September 2008 amendment incorrectly refers to the 30 March 2004 amendment which was not entered.

Furthermore, the priority claim to application PCT/US02/00476 appears to be improper because application PCT/US02/00476 was not pending at the time the present application was filed.

Application PCT/US02/00476 claimed a priority date of 30 January 2001, and application PCT/US02/00476 thus became abandoned as to the United States on July 31, 2003 (i.e. after the expiration of thirty months from the priority date). The present application was not filed until 30 March 2004.

Before the petition under 37 CFR 1.78(a)(3) can be granted, a renewed petition and either an Application Data Sheet (36 CFR 1.76(a)(5)) or a proper amendment (complying with the provisions of 37 CFR 1.121) to correct the above matters are required.

Further correspondence with respect to this matter should be addressed as follows:

By mail: Mail Stop PCT
Commissioner for Patents
P.O. Box 1450
Alexandria, VA 22313-1450

By hand: Customer Service Window
Mail Stop PCT
Randolph Building
401 Dulany Street
Alexandria, VA 22314

By fax: (571) 273-0459
ATTN: Office of Petitions

Any questions concerning this matter may be directed to Brian Whiteman at 571-272-6095.

Bryan Lin

/Brian Whiteman/
Detailee
Office of PCT Legal Administration
Telephone: 571-272-6095
Facsimile: 571-273-0459

Bryan Lin
PCT Legal Examiner
Office of PCT Legal Administration

UNITED STATES PATENT AND TRADEMARK OFFICE

OCT 20 2006

Commissioner for Patents
United States Patent and Trademark Office
P.O. Box 1450
Alexandria, VA 22313-1450
www.uspto.gov

DR. MELVIN BLECHER
4329 VAN NESS ST., NW
WASHINGTON DC 20016

In re Application of
Theoharis C. Theoharides
Serial No.: 10/811,828
Filed : March 20, 2004
Attorney Ref No.: 51275/149

Decision on Petition

This letter is in response to the Petition under 37 C.F.R. 1.144, filed on October 9, 2006, to request review of the requirement for restriction made final in the referenced application and request that that restriction requirement be withdrawn.

BACKGROUND

A review of the file history shows that the application was filed on March 20, 2004 with claims 40 to 45.

On May 4, 2006, a requirement under 35 U.S.C. 121, to elect a single disclosed species from each of the genera of flavonoid and proteogylcan was made from claims 40 to 44.

On June 21, 2006, applicant provisionally elected quercetin and chondroitin sulfate with traverse. However, applicant also pointed out that claim 45 was not referred to in the restriction requirement of May 4, 2006.

On June 29, 2006, the examiner mailed a supplemental restriction requirement under 35 U.S.C. 121, clarifying the record and requiring applicant to elect a single disclosed species from claims 40 to 45.

On August 28, 2006, the restriction requirement was deemed proper and made final and a first action was mailed to applicants. Claims 40 to 45 were rejected on the grounds of nonstatutory double patenting, claims 40 to 45 were rejected under 35 U.S. C. 112 first paragraph, and claims 40 to 43 and 45 were rejected under 35 U.S.C. 103(a) as unpatentable over Ronca et al. in view of Gelber et al. in view of Noblie et al. in view of Sang.

On October 9, 2006, applicant filed the petition discussed herein.

DISCUSSION

Applicant's petition under 37 C.F.R. 1.144, was filed on October 9, 2006, to request review of the requirement for restriction made final in the referenced application and request that that requirement to elect a species be withdrawn.

Applicant argues that, contrary to the examiner's assertion, all flavonoids have the same basic three-ring structure and that the flavonoid species listed in claim 42 are merely claimed members of the same family and differ only in relative strength.

Applicant also argues that that examiner has improperly ruled that the heavily sulfated proteoglycan component of claim 40 is too broad. Applicant argues that the chondroitin sulfate is merely one of a family of molecules more accurately called "glycosaminoglycans" because one of the two sugars is always an amino sugar and that all sulfated proteoglycans are generally known in the art to exhibit similar properties.

Applicant's argument is acknowledged and has been carefully considered, however, it is found not persuasive on the following basis.

Applicant apparently does not understand election of species practice, which is the only thing that the examiner has used. Even if the flavonoids have a common core structure (which they apparently do not), they do have different structures, and different functions/effects even if only by having different relative strengths. That is the essence of species. Also, applicant should understand that if the elected species is allowable, then the search will extend to non-elected species so applicant will not necessarily be precluded from getting an examination on the additional species.

Regarding proteoglycans, applicant's argument seems to be directed to a 112, 1st rejection and not to the election of species requirement, and thus, is also not persuasive.

DECISION

For these reasons, the Petition under 37 C.F.R. 1.144, filed on October 9, 2006, to request that the election of a single species from each of the genera of flavonoid and proteogylcan be withdrawn is **DENIED.**

Applicant remains under obligation to properly reply to the non-final Office action mailed August 28, 2006, within the time period set therein or as extended under 1.136 (a).

Any request for reconsideration of this petition decision must be filed within two (2) months of the mailing date of this decision.

Should there be any questions regarding this decision, please contact Special Program Examiner Marianne C. Seidel, by mail addressed to Director, Technology Center 1600, PO BOX 1450, ALEXANDRIA, VA 22313-1450, or by telephone at (571) 272-1600 or by Official Fax at 703-872-9306.

Bruce Kisliuk
Director, Technology Center 1600.

UNITED STATES PATENT AND TRADEMARK OFFICE

COMMISSIONER FOR PATENTS
UNITED STATES PATENT AND TRADEMARK OFFICE
P.O. BOX 1450
ALEXANDRIA, VA 22313-1450
www.uspto.gov

MATTINGLY, STANGER, MALUR &
BRUNDIDGE, P.C.
1800 Diagonal Road
Suite 370
Alexandria, VA 22314

MAILED

SEP 2 8 2005

Technology Center 2100

In re Application of:
Yukio NAKANO et al.
Application No. 10/811,856
Filed: March 30, 2004
For: STORAGE SYSTEM

DECISION ON PETITION
TO MAKE SPECIAL

This is a decision on the petition, filed on August 4, 2005 under 37 C.F.R. §102(d) and M.P.E.P. § 708.02(VIII): Accelerated Examination, to make the above-identified application special.

The petition is **GRANTED**.

M.P.E.P. § 708.02, Section VIII which sets out the prerequisites for a grantable petition for Accelerated Examination under 37 C.F.R. § 102(d) states in relevant part:

> A new application (one which has not received any examination by the examiner) may be granted special status provided that applicant (and this term includes applicant's attorney or agent) complies with each of the following items:
>
> (A) Submits a petition to make special accompanied by the fee set forth in 37 CFR 1.17(h);
>
> (B) Presents all claims directed to a single invention, or if the Office determines that all the claims presented are not obviously directed to a single invention, will make an election without traverse as a prerequisite to the grant of special status;
>
> (C) Submits a statement(s) that a pre-examination search was made, listing the field of search by class and subclass, publication, Chemical Abstracts, foreign patents, etc. A search made by a foreign patent office satisfies this requirement;
>
> (D) Submits one copy each of the references deemed most closely related to the subject matter encompassed by the claims if said references are not already of record; and
>
> (E) Submits a detailed discussion of the references, which discussion points out, with the particularity required by 37 CFR 1.111 (b) and (c), how the claimed subject matter is patentable over the references.

> In those instances where the request for this special status does not meet all the prerequisites set forth above, applicant will be notified and the defects in the request will be stated. The application will remain in the status of a new application awaiting action in its regular turn. In those instances where a request is defective in one or more respects, applicant will be given one opportunity to perfect the request in a renewed petition to make special. If perfected, the request will then be granted. If not perfected in the first renewed petition, any additional renewed petitions to make special may or may not be considered at the discretion of the Group Special Program Examiner.

Applicant's submission of August 4, 2005 meets all the criteria set out above. Accordingly, the petition is **GRANTED**. The application file is being forwarded to the Examiner for accelerated examination in accordance with M.P.E.P. § 708.02. If the application is subsequently allowed, it will be given priority for printing. See M.P.E.P. § 1309.

Vincent N. Trans
Special Program Examiner
Technology Center 2100
Computer Architecture, Software, and
Information Security
571-272-3613

UNITED STATES PATENT AND TRADEMARK OFFICE

COMMISSIONER FOR PATENTS
UNITED STATES PATENT AND TRADEMARK OFFICE
P.O. BOX 1450
ALEXANDRIA, VA 22313-1450
www.uspto.gov

Paper No.

Law Offices of Dr Melvin Blecher
4329 Van Ness St, NW
Washington DC 20016-5625

COPY MAILED

MAR 13 2007

OFFICE OF PETITIONS

In re Application of :
Theoharis Theoharides : DECISION ON PETITION
Application No. 10/811,859 :
Filed: March 30, 2004 :
Attorney Docket No. 51275/152 :

This is in response to the "PETITION TO REVIVE AN APPLICATION FOR PATENT ABANDONED UNAVOIDABLY UNDER 37 CFR 1.137(a)," filed December 7, 2006.

The petition under § 1.137(a) is **DISMISSED** without consideration on the merits.

Any renewed petition must be submitted within **TWO (2) MONTHS** from the mail date of this decision. The reconsideration request should include a cover letter entitled "Renewed Petition under 37 CFR §1.137(a)" or "Renewed Petition under 37 CFR §1.137(b)," as appropriate. Extensions of time under 37 CFR §1.136(a) are permitted.

The above-identified application became abandoned for failure to file a timely reply to the Office action mailed March 13, 2006. This Office action set a three-month period for reply, with extensions of time obtainable under § 1.136(a). No reply received and no extension obtained, the application became abandoned on June 14, 2006. A Notice of Abandonment was mailed on October 23, 2006.

In response, Applicant filed this petition, asserting that the delay in filing a reply to the Office action was unavoidable. Applicant asserts that the Office action was never received by

his attorney. The petition did not include payment of the petition fee or a response to the Office action.

37 CFR 1.137(a) provides, in pertinent part, that:

If the delay in reply by applicant or patent owner was unavoidable, a petition may be filed pursuant to this paragraph to revive an abandoned application. A grantable petition pursuant to this paragraph must be accompanied by:

> (1) The reply required to the outstanding Office action or notice, unless previously filed;
> (2) The petition fee as set forth in § 1.17(l);
> (3) A showing to the satisfaction of the Director that the entire delay in filing the required reply from the due date for the reply until the filing of a grantable petition pursuant to this paragraph was unavoidable; and
> (4) Any terminal disclaimer (and fee as set forth in § 1.20(d)) required pursuant to paragraph (d) of this section.

35 U.S.C. 41(a) (7) provides that a petition for the revival of an unintentionally abandoned application or for the unintentionally delayed payment of the issue fee must be accompanied by the petition fee set forth in 37 CFR 1.17(m), unless the petition is filed under 35 U.S.C. 133 or 151 (on the basis of unavoidable delay), in which case the fee is set forth in 37 CFR 1.17(l). Thus, unless the circumstances warrant the withdrawal of the holding of abandonment (i.e., it is determined that the application is not properly held abandoned), the payment of a petition fee to obtain the revival of an abandoned application is a statutory prerequisite to revival of the abandoned application, and cannot be waived.

In addition, the phrase "[o]n filing" in 35 U.S.C. 41(a)(7) means that the petition fee is required for the filing (and not merely the grant) of a petition under 37 CFR 1.137. See H.R. Rep. No. 542, 97th Cong., 2d Sess. 6 (1982), reprinted in 1982 U.S.C.C.A.N. 770 ("[t]he fees set forth in this section are due on filing the petition"). Therefore, the Office: (A) will not refund the petition fee required by 37 CFR 1.17(l) or 1.17(m), regardless of whether the petition under 37 CFR 1.137 is dismissed or denied; and (B) will not reach the merits of any petition under 37 CFR 1.137 lacking the requisite petition fee.

The circumstances do not warrant withdrawal of the holding of abandonment. The application is properly abandoned. The petition does not include an adequate showing of non-receipt. In the absence of demonstrated irregularities in mailing of an Office action, petitioner must submit evidence to overcome this presumption. The showing required to establish non-receipt of an Office communication must include a statement from the practitioner stating that the Office communication was not received by the practitioner and attesting to the fact that a search of the file jacket and docket records indicates that the Office communication was not received. In addition, a copy of the docket record where the non-received Office communication would have been entered had it been received and docketed must be attached to and referenced in practitioner's statement. The petition does not include the required docket records. More importantly, the record shows that, in contradiction to the conclusion that the Office action was not received, on September 13, 2006, attorney for applicant filed on September 13, 2006 a request for extension of time for response to the March 13, 2006 Office action.

The petition fee set forth in 37 CFR 1.17(l) is currently $250 for a small entity and $500 for a large entity. As petitioner has not submitted a petition fee, the Office will not reach the merits of the instant petition.

Further correspondence with respect to this decision should be addressed as follows:

By mail: Mail Stop Petition
Commissioner for Patents
P.O. Box 1450
Alexandria, VA 22313-1450

By fax: (571) 273-8300
ATTN: Office of Petitions

By hand: Customer Service Window
Randolph Building
401 Dulany Street
Alexandria, VA 22314

Telephone inquiries related to this decision may be directed to the undersigned at (571) 272-3219.

Nancy Johnson
Senior Petitions Attorney
Office of Petitions

UNITED STATES PATENT AND TRADEMARK OFFICE

Commissioner for Patents
United States Patent and Trademark Office
P.O. Box 1450
Alexandria, VA 22313-1450
www.uspto.gov

td

Mailed: 5/20/05

In re application of	:	
Stephanie Andes et al.	:	DECISION ON
Serial No. 10/811,867	:	PETITION
Filed: March 30, 2004	:	

For: MULTILAYER PIGMENTS BASED ON COATED METAL PLATELETS

This is a decision on the PETITION UNDER 37 CFR 1.181 TO WITHDRAW THE FINALITY OF THE OFFICE ACTION mailed October 15, 2004.

The instant application is a continuation of Application 10/453,479. A final office action was mailed to Applicants in that application on August 26, 2003. The instant application was filed on March 30, 2004. On October 15, 2004, a first action final office action was mailed. The examiner stated in the office action that all claims were drawn to the same invention claimed in the earlier application and could have been finally rejected on the grounds and art of record in the next office action if they had been entered in the earlier application.

On December 10, 2004, the instant petition was timely filed to formally request the withdrawal of the finality of the October 15, 2004 office action. The Office apologizes for the delay in processing the instant petition.

DECISION

As set forth in the petition, the standard for making an Office action final is set forth in section 706.07(b) of the MPEP which states:

> 706.07(b) Final Rejection, When Proper on First Action
> The claims of a new application may be finally rejected in the first Office action in those situations where (A) the new application is a continuing application of, or a substitute for, an earlier application, and (B) all claims of the new application (1) are drawn to the same invention claimed in the earlier application, and (2) would have been properly finally rejected on the grounds and art of record in the next Office action if they had been entered in the earlier application.

In the instant application, the examiner has rejected claim 11 (previous claim 17 in the '479 application) under 102(b) as being anticipated by Schmid et al. ('486). Additionally, claim 11 is also rejected under 35 USC 103 as being obvious over Schmid et al. ('504). However, it is noted that in the parent application, claim 17 (claim 11 in the current application) was only rejected under 35 USC 103 as being obvious over Schmid et al. ('486) and ('504). No rejection of this claim was made under 35 USC 102 as in the present application. Claim 11 of the instant

application has been rejected using a new ground of rejection that was not present in the parent application and therefore, the finality of the office action is improper.

Accordingly, the petition is **GRANTED**.

Because of the delays by the Office in granting this petition, the examiner is directed to send out a new non-final office action.

JMStone

Jacqueline M. Stone, Director
Technology Center 1700
Chemical and Materials Engineering

MILLEN, WHITE, ZELANO & BRANIGAN, P.C.
2200 CLARENDON BLVD.
SUITE 1400
ARLINGTON VA 22201

UNITED STATES PATENT AND TRADEMARK OFFICE

Commissioner for Patents
United States Patent and Trademark Office
P.O. Box 1450
Alexandria, VA 22313-1450
www.uspto.gov

MATTINGLY, STANGER, MALUR &
BRUNDIDGE, P.C.
1800 Diagonal Road
Suite 370
Alexandria, VA 22314

MAILED
DEC 15 2005
Technology Center 2100

In re Application of:
Y. KANEDA et al.
Application No. 10/811,868
Filed: March 30, 2004
For: MANAGEMENT COMPUTER AND METHOD OF MANAGING DATA STORAGE APPARATUS

DECISION ON PETITION TO MAKE SPECIAL

This is a decision on the petitions, filed on July 14, 2005 under 37 C.F.R. §102(d) and M.P.E.P. § 708.02(VIII): Accelerated Examination, to make the above-identified application special.

The petition is **GRANTED**.

M.P.E.P. § 708.02, Section VIII which sets out the prerequisites for a grantable petition for Accelerated Examination under 37 C.F.R. § 102(d) states in relevant part:

> A new application (one which has not received any examination by the examiner) may be granted special status provided that applicant (and this term includes applicant's attorney or agent) complies with each of the following items:
>
> (A) Submits a petition to make special accompanied by the fee set forth in 37 CFR 1.17(h);
>
> (B) Presents all claims directed to a single invention, or if the Office determines that all the claims presented are not obviously directed to a single invention, will make an election without traverse as a prerequisite to the grant of special status;
>
> (C) Submits a statement(s) that a pre-examination search was made, listing the field of search by class and subclass, publication, Chemical Abstracts, foreign patents, etc. A search made by a foreign patent office satisfies this requirement;
>
> (D) Submits one copy each of the references deemed most closely related to the subject matter encompassed by the claims if said references are not already of record; and
>
> (E) Submits a detailed discussion of the references, which discussion points out, with the particularity required by 37 CFR 1.111 (b) and (c), how the claimed subject matter is patentable over the references.

Applicant's submission of July 14, 2005 meets all the criteria set out above. Accordingly, the petition is **GRANTED**. The application file is being forwarded to the Examiner for accelerated examination in accordance with M.P.E.P. § 708.02. If the application is subsequently allowed, it will be given priority for printing. See M.P.E.P. § 1309.

Vincent N. Trans
Special Program Examiner
Technology Center 2100
Computer Architecture, Software, and
Information Security
571-272-3613

UNITED STATES PATENT AND TRADEMARK OFFICE

Commissioner for Patents
United States Patent and Trademark Office
P.O. Box 1450
Alexandria, VA 22313-1450
www.uspto.gov

MATTINGLY, STANGER, MALUR &
BRUNDIDGE, P.C.
1800 Diagonal Road
Suite 370
Alexandria, VA 22314

MAILED

MAR 22 2006

Technology Center 2100

In re Application of:
A. SATO, et al.
Application No. 10/811,878
Filed: March 30, 2004
For: INFORMATION PROCESSING SYSTEM AND MEHTOD

DECISION ON PETITION TO MAKE SPECIAL

This is a decision on the petition, filed on 25 July 2005 under 37 C.F.R. §102(d) and M.P.E.P. § 708.02(VIII): Accelerated Examination, to make the above-identified application special.

The petition is **GRANTED**.

M.P.E.P. § 708.02, Section VIII which sets out the prerequisites for a grantable petition for Accelerated Examination under 37 C.F.R. § 102(d) states in relevant part:

> A new application (one which has not received any examination by the examiner) may be granted special status provided that applicant (and this term includes applicant's attorney or agent) complies with each of the following items:
>
> (A) Submits a petition to make special accompanied by the fee set forth in 37 CFR 1.17(h);
>
> (B) Presents all claims directed to a single invention, or if the Office determines that all the claims presented are not obviously directed to a single invention, will make an election without traverse as a prerequisite to the grant of special status;
>
> (C) Submits a statement(s) that a pre-examination search was made, listing the field of search by class and subclass, publication, Chemical Abstracts, foreign patents, etc. A search made by a foreign patent office satisfies this requirement;
>
> (D) Submits one copy each of the references deemed most closely related to the subject matter encompassed by the claims if said references are not already of record; and
>
> (E) Submits a detailed discussion of the references, which discussion points out, with the particularity required by 37 CFR 1.111 (b) and (c), how the claimed subject matter is patentable over the references.

Applicant's submission of 25 July 2005 meets all the criteria set out above. Accordingly, the petition is **GRANTED**. The application file is being forwarded to the Examiner for accelerated examination in accordance with M.P.E.P. § 708.02. If the application is subsequently allowed, it will be given priority for printing. See M.P.E.P. § 1309.

Vincent N. Trans
Special Program Examiner
Technology Center 2100
Computer Architecture, Software, and
Information Security
571-272-3613

UNITED STATES PATENT AND TRADEMARK OFFICE

Commissioner for Patents
United States Patent and Trademark Office
P.O. Box 1450
Alexandria, VA 22313-1450
www.uspto.gov

MAIL

JUN 0 2 2005

DIRECTOR OFFICE
TECHNOLOGY CENTER 2600

MCDERMOTT WILL & EMERY LLP
600 13TH STREET, N.W.
WASHINGTON DC 20005-3096

In re Application of :
Hideki KUWAJIMA, et al. :
Application No. 10/811,895 : DECISION ON PETITION
Filed: March 30, 2004 : TO MAKE SPECIAL
For: **SPINDLE MOTOR AND DISK DRIVE UNIT** :

This is a decision on the petition filed April 19, 2006 under Manual of Patent Examination Procedure §708.02, VIII requesting accelerated examination.

The petition under Manual of Patent Examination Procedure §708.02, VIII, must:
(1) be filed prior to receiving any examination by the examiner,
(2) be accompanied by the required fee- $130,
(3) the claims should be directed to a single invention (if it is determined that the claims pertain to more than one invention, then applicant will have to make an election without traverse or forfeit accelerated examination status),
(4) state that a pre-examination search was made, and fully discuss the search method employed, such as classes and subclasses searched, publications, Chemical abstracts, patents, etc. A search made by a foreign patent office satisfies this requirement,
(5) be accompanied by a copy of each of the references most closely related to the subject matter encompassed by the claims if said references are not already of record,
(6) fully discuss the references, pointing out with the particularity required by 37 C.F.R. §1.111 (b) and (c), how the claimed subject matter is patentable over the references.

The petitioner meets all the above-listed requirements. Accordingly, the petition is **GRANTED**.

The application will retain its special status throughout its entire prosecution, including any appeal to the Board of Patent Appeals and Interferences, subject only to diligent prosecution by the applicant. The application file is being forwarded to the examiner for appropriate action in due course.

Krista Zele
Special Program Examiner
Technology Center 2600
Communications

UNITED STATES PATENT AND TRADEMARK OFFICE

UNITED STATES DEPARTMENT OF COMMERCE
United States Patent and Trademark Office
Address: COMMISSIONER FOR PATENTS
P.O. Box 1450
Alexandria, Virginia 22313-1450
www.uspto.gov

BACON & THOMAS, PLLC
625 SLATERS LANE
FOURTH FLOOR
ALEXANDRIA, VA 22314-1176

Mail Date: 05/11/2010

Applicant	: Yi-Chia Chen	: DECISION ON REQUEST FOR
Patent Number	: 7617174	: RECALCULATION of PATENT
Issue Date	: 11/10/2009	: TERM ADJUSTMENT IN VIEW
Application No	: 10/811,900	: OF WYETH AND NOTICE OF INTENT TO
Filed	: 03/30/2004	: ISSUE CERTIFICATE OF CORRECTION
		:

The Request for Recalculation is **GRANTED** to the extent indicated.

The patent term adjustment has been determined to be **1284** days. The USPTO will *sua sponte* issue a certificate of correction reflecting the amount of PTA days determined by the recalculation.

Prior to the issuance of the certificate of correction, the USPTO will afford patentee an opportunity to be heard and request reconsideration. Accordingly, patentee has **one month or thirty (30) days**, whichever is longer, to file a request for reconsideration of this patent term adjustment calculation. See 35 U.S.C. 154(b)(3)(B)(ii) and 37 CFR 1.322(a)(4). No extensions of time will be granted under 37 CFR 1.136.

Patentee should use document code PET.OP if electronically filing a request for reconsideration of this patent term adjustment calculation. The patentee must also include the information required by 37 CFR 1.705(b)(2) and the fee required by 37 CFR 1.18(e). If patentee does not file a timely request for reconsideration of this patent term adjustment calculation including the information required by 37 CFR 1.705(b)(2) and the fee required by 37 CFR 1.18(e), the USPTO will issue a certificate of correction reflecting the PTA determination noted above.

Patentee should be aware that in order to preserve the right to review in the United States District Court for the District of Columbia of the USPTO patent term adjustment determination, patentee must ensure that he or she also take the steps required under 35 U.S.C. 154(b)(4)(A) in a timely manner. Nothing in the request for recalculation should be construed as providing an alternative time frame for commencing a civil action under 35 U.S.C. 154(b)(4)(A).

Any questions concerning this decision should be directed to the Office of Patent Legal Administration at 571-272-7702.

UNITED STATES PATENT AND TRADEMARK OFFICE

COMMISSIONER FOR PATENTS
UNITED STATES PATENT AND TRADEMARK OFFICE
P.O. BOX 1450
ALEXANDRIA, VA 22313-1450
www.uspto.gov

MAIL

JUL 1 3 2005

DIRECTOR OFFICE
TECHNOLOGY CENTER 2100

MATTINGLY, STANGER, MALUR & BRUNDIDGE, P.C.
1800 DIAGONAL ROAD
SUITE 370
ALEXANDRIA VA 22314

In re Application of: HOSOUCHI, et al.
Application No. 10/811,923
Filed: March 30, 2004
For: REMOTE COPY CONTROL METHOD

DECISION ON PETITION
TO MAKE SPECIAL
(ACCELERATED EXAMINATION)
UNDER M.P.E.P. §708.02 (VIII)

This is a response to the petition filed 31 May 2005 and supplemented by the further submission of 13 June 2005 under 37 C.F.R. §1.102(d) and M.P.E.P. §708.02 (VIII): Accelerated Examination, to make the above-identified application special.

The Petition is **DISMISSED**.

M.P.E.P. §708.02, Section VIII which sets out the prerequisites for a grantable petition for Accelerated Examination under 37 C.F.R. §1.102(d) states in relevant part:

A new application (one which has not received any examination by the examiner) may be granted special status provided that applicant (and this term includes applicant's attorney or agent) complies with each of the following items:

(a) Submits a petition to make special accompanied by the fee set forth in **37 CFR 1.17(h)**;

(b) Presents all claims directed to a single invention, or if the Office determines that all the claims presented are not obviously directed to a single invention, will make an election without traverse as a prerequisite to the grant of special status;

(c) Submits a statement(s) that a pre-examination search was made, listing the field of search by class and subclass, publication, Chemical Abstracts, foreign patents, etc. The pre-examination search must be directed to the invention as claimed in the application for which special status is requested. A search made by a foreign patent office satisfies this requirement;

(d) Submits one copy each of the references deemed most closely related to the subject matter encompassed by the claims if said references are not already of record; and

(e) Submits a detailed discussion of the references, which discussion points out, with the particularity required by 37 CFR 1.111 (b) and (c), how the claimed subject matter is patentable over the references.

In those instances where the request for this special status does not meet all the prerequisites set forth above, **applicant will be notified and the defects in the request will be stated**. The application will remain in the status of a new application awaiting action in its regular turn. In those instances where a request is defective in one or more respects, applicant will be given one opportunity to perfect the request in a renewed petition to make special. If perfected, the request will then be granted. If not perfected in the first renewed petition, any additional renewed petitions to make special may or may not be considered at the discretion of the Technology Center (TC) Special Program Examiner.

The petition filed 31 May 2005 and supplemented on 13 June 2005 fails to adequately meet requirement (e) of the criteria set forth above. The discussion of the references does not point out with the particularity required by 37 CFR 1.111(b) and (c) how the claimed subject matter is patentable over the references.

The petition identifies a feature of each independent claim (i.e., a first feature of independent claim 1, . . ., a ninth feature of independent claim 20). However, in identifying this feature, the discussion states that the references "fail to disclose or suggest [the identified feature] *in combination* with the other limitations recited in the claims" (emphasis added). It is also stated in the discussion of each reference that the reference "does not disclose or suggest" the identified feature for each independent claim "*in combination* with the other limitations recited in each of the independent claims" (emphasis added). In effect, this statement indicates that the *entirety* of the nine independent claims is not disclosed by the five references purported to be most closely related. Such a statement is not a sufficient detailed description. Applicants may wish to consider deleting the portions of the discussion that indicate that the identified features *in combination* with the other limitations are not disclosed by the references. Also, it is suggested that if the identical statement is being made to distinguish each reference from the claims, as in the supplemental petition, then the statement should simply be made once in the petition. (E.g., "None of the references disclose . . . .")

Additionally, even if the identified features were not considered "in combination with the other limitations recited in each of the independent claims", the identified features represent a substantial portion, and in some cases essentially all, of the claimed features of the invention. A statement that most, and in some cases essentially all, of the claimed features of the nine independent claims are not disclosed by the five references purported to be most closely related is not a sufficient detailed description. While the discussion (pages 5-6) does state that "although the distinguishing feature(s) may represent a substantial portion of the claimed invention, the claimed invention including said feature(s) and their interoperation provides a novel storage system and system and method related to or implemented in or by said storage system not taught or suggested by any of the references of record", it is not clear what is intended by this statement. The statement fails to explain why "the distinguishing feature(s) may represent a substantial portion of the claimed invention".

The discussion also states that, for each of the references deemed most closely related, the reference fails to disclose a "registering an identifier of a plurality of second disk subsystems for relay as a command transmitting route for the first disk subsystem and a third disk subsystem." However, it is unclear what is intended by the discussion of this particular feature when this feature does not even appear in several of the independent claims. (The feature is recited *verbatim* in claim 1 but does not appear to be recited at all in at least independent claims 6 and 12.) The discussion also mentions several other features as not being shown by one or more of the references where the feature does not appear in all of the independent claims.

Petition to Make Special **DISMISSED**.

Petitioner is given one opportunity to perfect the petition. Any request for reconsideration must be filed within TWO MONTHS of the mail date of this decision.

Until the renewed petition is submitted, the application will be returned to the examiner's docket to await treatment on the merits in the normal order of examination.

Pinchus M. Laufer
Special Program Examiner
Technology Center 2100
Computer Architecture, Software and Information Security
571-272-3599

ds

UNITED STATES PATENT AND TRADEMARK OFFICE

Commissioner for Patents
United States Patent and Trademark Office
P.O. Box 1450
Alexandria, VA 22313-1450
www.uspto.gov

MATTINGLY, STANGER, MALUR & BRUNDIDGE, P.C.
1800 DIAGONAL ROAD
SUITE 370
ALEXANDRIA, VA 22314

MAILED
MAR 14 2006
TECHNOLOGY CENTER 2100

In re Application of: Hosouchi, et al.
Application No. 10/811,923
Filed: March 30, 2004
For: REMOTE COPY CONTROL METHOD

DECISION ON PETITION
TO MAKE SPECIAL
(ACCELERATED EXAMINATION)
UNDER M.P.E.P. §708.02 (VIII)

This is a decision on the Request for Reconsideration filed August 29, 2005 on the petition to make special under 37 C.F.R. §102(d) and M.P.E.P. §708.02(VIII): Accelerated Examination, originally filed on May 31, 2005, supplemented on June 13, 2005 and dismissed on July 13, 2005.

The Petition is **GRANTED**.

M.P.E.P. §708.02, Section VIII which sets out the prerequisites for a grantable petition for Accelerated Examination under 37 C.F.R. §1.102(d) states in relevant part:

A new application (one which has not received any examination by the examiner) may be granted special status provided that applicant (and this term includes applicant's attorney or agent) complies with each of the following items:

(a) Submits a petition to make special accompanied by the fee set forth in 37 CFR 1.17(h);

(b) Presents all claims directed to a single invention, or if the Office determines that all the claims presented are not obviously directed to a single invention, will make an election without traverse as a prerequisite to the grant of special status;

(c) Submits a statement(s) that a pre-examination search was made, listing the field of search by class and subclass, publication, Chemical Abstracts, foreign patents, etc. The pre-examination search must be directed to the invention as claimed in the application for which special status is requested. A search made by a foreign patent office satisfies this requirement;

(d) Submits one copy each of the references deemed most closely related to the subject matter encompassed by the claims if said references are not already of record; and

(e) Submits a detailed discussion of the references, which discussion points out, with the particularity required by 37 CFR 1.111 (b) and (c), how the claimed subject matter is patentable over the references.

Petition to Make Special **GRANTED** since all of the requirements for special status under MPEP § 708.02(VIII) have been met.

The application file is being forwarded to the Examiner for accelerated examination in accordance with M.P.E.P. §708.02, Section VIII. If the application is subsequently allowed, it will be given priority for printing. See M.P.E.P. §1309.

Brian L. Johnson
Special Program Examiner
Technology Center 2100
Computer Architecture, Software and Information Security
571-272-3595

UNITED STATES PATENT AND TRADEMARK OFFICE

COMMISSIONER FOR PATENTS
UNITED STATES PATENT AND TRADEMARK OFFICE
P.O. BOX 1450
ALEXANDRIA, VA 22313-1450
www.uspto.gov

COPY MAILED

SEP 29 2009

OFFICE OF PETITIONS

OBLON, SPIVAK, MCCLELLAND
MAIER & NEUSTADT, L.L.P.
1940 DUKE STREET
ALEXANDRIA VA 22314

In re Patent No. 7,457,014 :
Issued: November 25, 2008 :
Application No. 10/811,934 : PATENT TERM ADJUSTMENT
Filed: March 30, 2004 :
Dkt. No.: 251166US2 :

This is a decision on the "PETITION UNDER 37 C.F.R. §1.705(d) AND REQUEST FOR RECONSIDERATION OF PATENT TERM ADJUSTMENT," filed January 26, 2009.

The request for reconsideration of patent term adjustment (PTA) is **DISMISSED**.

The above-identified application matured into U.S. Pat. No. 7,457,014 on November 25, 2008. The patent issued with a PTA of 1,032 days. The request for reconsideration of patent term adjustment was timely filed within two months of the issue date of the patent. See, 37 CFR 1.705(d). Patentees request that the adjustment be increased from 1,032 days to 1,275 days.

Patentees request recalculation of the patent term adjustment based on the decision in Wyeth v. Dudas, 580 F. Supp. 2d 138, 88 U.S.P.Q. 2d 1538 (D.D.C. 2008). Patentees contend that pursuant to Wyeth, a PTO delay under 35 U.S.C. 154(b)(1)(A) overlaps with a delay under 35 U.S.C. 154(b)(1)(B) only if the delays occur on the same day.

Under 37 CFR 1.703(f), patentees are entitled to a period of patent term adjustment equal to the period of delays based on the grounds set forth in 37 CFR 1.702 reduced by the period of time equal to the period of time during which patentees failed to engage in reasonable efforts to conclude prosecution pursuant to 37 CFR 1.704. In other words, patentees are entitled to the period of Office delay reduced by the period of applicant delay.

Patentees do not dispute that the total period of Office delay is the sum of the period of three years delay and the period of examination delay, to the extent that these periods of delay are not overlapping. However, in effect, patentees contend that only a portion of the three year delay period overlaps with the period of examination delay. Accordingly, patentees submit that the total period of adjustment for Office delay is 1,275 days (deemed by applicants to be the sum of the period of three year delay (606 days) and the period of examination delay (1,032 days), reduced by 363 days of overlap). As such, patentees assert entitlement to a patent term

adjustment of 1,275 days (606 days *plus* 1,032 days *less* zero days of overlap *less* zero days of applicant delay).

The Office agrees that as of the time that at the time of issuance of the patent, the application was pending three years and 606 days after its filing date. The three years delay commences the day after the date that is three years after the date that an application is filed, and ends the date that the patent issues, notwithstanding any periods of time excluded pursuant to U.S.C. 154(b)(1)(B)(i)-(iii). The Office agrees that certain action was not taken within a specified time frame, and, thus, the entry of a period of adjustment of 1,032 days is correct. At issue is whether patentees should accrue an additional 606 days of patent term adjustment for the Office taking in excess of three years to issue the patent as well as 1,032 days for Office failure to take a certain action within a specified time frame (or examination delay).

The Office contends that the period of 606 days of delay in issuing the patent overlaps with the period of examination delay of 1,032 days. Patentees' calculation of the period of overlap is inconsistent with the Office's interpretation of this provision. 35 U.S.C. 154(b)(2)(A) limits the adjustment of patent term, as follows:

> To the extent that the periods of delay attributable to grounds specified in paragraph (1) overlap, the period of any adjustment granted under this subsection shall not exceed the actual number of days the issuance of the patent was delayed.

Likewise, 35 CFR 1.703(f) provides that:

> To the extent that periods of delay attributable to the grounds specified in § 1.702 overlap, the period of adjustment granted under this section shall not exceed the actual number of days the issuance of the patent was delayed.

As explained in Explanation of 37 CFR 1.703(f) and of the United States Patent and Trademark Office Interpretation of 35 U.S.C. 154(b)(2)(A), 69 Fed. Reg. 34283 (June 21, 2004), the Office interprets 35 U.S.C. 154(b)(2)(A) as permitting either patent term adjustment under 35 U.S.C. 154(b)(1)(A)(i)-(iv), or patent term adjustment under 35 U.S.C. 154(b)(1)(B), but not as permitting patent term adjustment under both 35 U.S.C. 154(b)(1)(A)(i)-(iv) and 154(b)(1)(B). Accordingly, the Office implements the overlap provision as follows:

> If an application is entitled to an adjustment under 35 U.S.C. 154(b)(1)(B), the entire period during which the application was pending (except for periods excluded under 35 U.S.C. 154(b)(1)(B)(i)-(iii)), and not just the period beginning three years after the actual filing date of the application, is the period of delay under 35 U.S.C. 154(b)(1)(B) in determining whether periods of delay overlap under 35 U.S.C. 154(b)(2)(A). Thus, any days of delay for Office issuance of the patent more than 3 years after the filing date of the application, which overlap with the days of patent term adjustment accorded prior to the issuance of the patent will not result in any additional patent term adjustment. See 35 U.S.C. 154(b)(1)(B), 35 U.S.C. 154(b)(2)(A), and 37 CFR § 1.703(f). *See Changes to Implement Patent Term Adjustment Under Twenty Year Term; Final Rule*, 65 Fed. Reg.

> 56366 (Sept. 18, 2000). See, also, Revision of Patent Term Extension and Patent Term Adjustment Provisions; Final Rule, 69 Fed. Reg. 21704 (April 22, 2004), 1282 Off. Gaz. Pat. Office 100 (May 18, 2004). See, also, Explanation of 37 CFR 1.703(f) and of the United States Patent and Trademark Office Interpretation of 35 U.S.C. 154(b)(2)(A), 69 Fed. Reg. 34283 (June 21, 2004).

The current wording of § 1.703(f) was revised in response to the misinterpretation of this provision by a number of Patentees. The rule was slightly revised to more closely track the corresponding language of 35 U.S.C. 154(b)(2)(A). The relevant portion differs only to the extent that the statute refers back to provisions of the statute whereas the rule refers back to sections of the rule. This was not a substantive change to the rule nor did it reflect a change of the Office's interpretation of 35 U.S.C. 154(b)(2)(A). As stated in the Explanation of 37 CFR 1.703(f) and of the United States Patent and Trademark Office Interpretation of 35 U.S.C. 154(b)(2)(A), the Office has consistently taken the position that if an application is entitled to an adjustment under the three-year pendency provision of 35 U.S.C. 154(b)(1)(B), the entire period during which the application was pending before the Office (except for periods excluded under 35 U.S.C. 154(b)(1)(B)(i)-(iii)), and not just the period beginning three years after the actual filing date of the application, is the relevant period under 35 U.S.C. 154(b)(1)(B) in determining whether periods of delay "overlap" under 35 U.S.C. 154(b)(2)(A).

This interpretation is consistent with the statute. Taken together the statute and rule provide that to the extent that periods of delay attributable to grounds specified in 35 U.S.C. 154(b)(1) and in corresponding § 1.702 overlap, the period of adjustment granted shall not exceed the actual number of days the issuance of the patent was delayed. The grounds specified in these sections cover the A) guarantee of prompt Patent and Trademark Office responses, B) guarantee of no more than 3-year application pendency, and C) guarantee or adjustments for delays due to interference, secrecy orders and appeals. A section by section analysis of 35 U.S.C. 154(b)(2)(A) specifically provides that:

> Section 4402 imposes limitations on restoration of term. In general, pursuant to [35 U.S.C.] 154(b)(2)(A)-(C), total adjustments granted for restorations under [35 U.S.C. 154](b)(1) are reduced as follows: (1) To the extent that there are multiple grounds for extending the term of a patent that may exist simultaneously (e.g., delay due to a secrecy order under [35 U.S.C.] 181 and administrative delay under [35 U.S.C.] 154(b)(1)(A)), the term should not be extended for each ground of delay but only for the actual number of days that the issuance of a patent was delayed; See, 145 Cong. Rec. S14,718[1].

As such, the period for over three-year pendency does not overlap only to the extent that the actual dates in the period beginning three years after the date on which the application was filed overlap with the actual dates in the periods for failure of the Office to take action within

[1] The AIPA is title IV of the Intellectual Property and Communications Omnibus Reform Act of 1999 (S. 1948), which was incorporated and enacted as law as part of Pub. L. 106-113. The Conference Report for H.R. 3194, 106th Cong. 1st Sess. (1999), which resulted in Pub. L. 106-113, does not contain any discussion (other than the incorporated language) of S. 1948. A section-by-section analysis of S. 1948, however, was printed in the Congressional Record at the request of Senator Lott, See 145 Cong. Rec. S14,708-26 (1999)(daily ed. Nov. 17, 1999).

specified time frames. In other words, consideration of the overlap does not begin three years after the filing date of the application.

In this instance, the relevant period under 35 U.S.C. 154(b)(1)(B) in determining whether periods of delay "overlap" under 35 U.S.C. 154(b)(2)(A) is the entire period during which the application was pending before the Office, March 30, 2004, to the date the patent issued on November 25, 2008. Prior to the issuance of the patent, 1,032 days of patent term adjustment were accorded for the Office failing to respond within a specified time frame during the pendency of the application. All of the 606 days for Office delay in issuing the patent overlap with the 1,032 days of Office delay. During that time, the issuance of the patent was delayed by 1,032 days. The Office did not delay 1,032 days and also delay an additional 606 days. Accordingly, as the 606 days attributable to the delay in the issuance of the patent overlaps with the adjustment of 1,032 days attributable to grounds specified in § 1.702(a), entry of both periods is not warranted.

In view thereof, no adjustment to the patent term will be made.

The Office acknowledges submission of the required application fee of $200.00.

Telephone inquiries specific to this matter should be directed to the undersigned at (571) 272-3205.

Alesia M. Brown
Petitions Attorney
Office of Petitions

UNITED STATES PATENT AND TRADEMARK OFFICE

COMMISSIONER FOR PATENTS
UNITED STATES PATENT AND TRADEMARK OFFICE
P.O. BOX 1450
ALEXANDRIA, VA 22313-1450
www.uspto.gov

SMITH PATENT OFFICE
1901 PENNSYLVANIA AVENUE, NW
SUITE 200
WASHINGTON, DC 20006-3433

COPY MAILED

APR 1 5 2004

OFFICE OF PETITIONS

In re Application of	:	
Kenji Kita et al	:	
Application No. 10/811,953	:	NOTICE
Filed: March 30, 2004	:	
Attorney Docket No. 0087/008001	:	

This is a notice regarding your request for acceptance of a fee deficiency submission under 37 CFR 1.28. On September 1, 1998, the Court of Appeals for the Federal Circuit held that 37 CFR 1.28(c) is the sole provision governing the time for correction of the erroneous payment of the issue fee as a small entity. **See DH Technology v. Synergystex International, Inc. 154 F.3d 1333, 47 USPQ2d 1865 (Fed. Cir. Sept. 1, 1998).**

The Office no longer investigates or rejects original or reissue applications under 37 CFR 1.56. **1098 Off. Gaz. Pat. Office 502 (January 3, 1989)**. Therefore, nothing in this Notice is intended to imply that an investigation was done.

Your fee deficiency submission under 37 CFR 1.28 is hereby **ACCEPTED**.

Inquiries related to this communication should be directed to the Office of Petitions Staff at (703) 305-9285.

This matter is being referred to the Office of Initial Patent Examination.

Wan Laymon

Wan Laymon
Petitions Examiner
Office of Petitions
Office of the Deputy Commissioner
for Patent Examination Policy

UNITED STATES PATENT AND TRADEMARK OFFICE

Commissioner for Patents
United States Patent and Trademark Office
P.O. Box 1450
Alexandria, VA 22313-1450
www.uspto.gov

WENDEROTH LIND & PONACK
2033 K STREET N.W., SUITE 800
WASHINGTON, DC 20006-1021

COPY MAILED

SEP 14 2005

OFFICE OF PETITIONS

In re Application of :
Mitsuo Kawaji et al :
Application No. 10/811,963 : ON PETITION
Filed: March 30, 2004 :
Attorney Docket No. 2004_0491A :

This is a decision on the petition under 37 CFR 1.313(c), filed September 13, 2005, which is being treated under 37 CFR 1.313(c)(2), to withdraw the above-identified application from issue after payment of the issue fee.

The petition is **GRANTED**.

The above-identified application is withdrawn from issue for consideration of a submission under 37 CFR 1.114 (request for continued examination). See 37 CFR 1.313(c)(2).

Petitioner is advised that the issue fee paid on July 7, 2005 in the above-identified application cannot be refunded. If, however, the above-identified application is again allowed, petitioner may request that it be applied towards the issue fee required by the new Notice of Allowance.[1]

Telephone inquiries should be directed to Wan Laymon at (571) 272-3220.

This matter is being referred to Technology Center AU 2837 for processing of the request for continued examination under 37 CFR 1.114 and for consideration of the concurrently filed IDS.

Wan Laymon
Wan Laymon
Petitions Examiner
Office of Petitions
Office of the Deputy Commissioner
for Patent Examination Policy

---

[1] The request to apply the issue fee to the new Notice may be satisfied by completing and returning the new Issue Fee Transmittal Form PTOL-85(b), which includes the following language thereon: "Commissioner for Patents is requested to apply the Issue Fee and Publication Fee (if any) or re-apply any previously paid issue fee to the application identified above." Petitioner is advised that, whether a fee is indicated as being due or not, the Issue Fee Transmittal Form **must** be completed and timely submitted to avoid abandonment. Note the language in bold text on the first page of the Notice of Allowance and Fee(s) Due (PTOL-85).

UNITED STATES PATENT AND TRADEMARK OFFICE

Commissioner for Patents
United States Patent and Trademark Office
P.O. Box 1450
Alexandria, VA 22313-1450
www.uspto.gov

WENDEROTH LIND & PONACK LLP
2033 K STREET NW, SUITE 800
WASHINGTON, DC 20006-1021

COPY MAILED

DEC 0 8 2005

OFFICE OF PETITIONS

In re Application of	:
Mitsuo Kawaji et al	:
Application No. 10/811,963	: DECISION GRANTING PETITION
Filed: March 30, 2004	: UNDER 37 CFR 1.313(c)(2)
Attorney Docket No. 2004_0491A	:

This is a decision on the petition, filed December 6, 2005, under 37 CFR 1.313(c)(2) to withdraw the above-identified application from issue after payment of the issue fee.

The petition is **GRANTED**.

The above-identified application is withdrawn from issue for consideration of a submission under 37 CFR 1.114 (request for continued examination). See 37 CFR 1.313(c)(2).

Petitioner is advised that the issue fee paid on November 15, 2005 in the above-identified application cannot be refunded. If, however, the above-identified application is again allowed, petitioner may request that it be applied towards the issue fee required by the new Notice of Allowance.[1]

Telephone inquiries should be directed to the undersigned at (571) 272-3218.

This matter is being referred to Technology Center AU 2837 for processing of the request for continued examination under 37 CFR 1.114 and for consideration of the Information Disclosure Statement.

Frances Hicks
Petitions Examiner
Office of Petitions

---

[1] *The request to apply the issue fee to the new Notice may be satisfied by completing and returning the new Issue Fee Transmittal Form PTOL-85(b) (along with any balance due at the time of payment), which includes the following language thereon: "Commissioner for Patents is requested to apply the Issue Fee and Publication Fee (if any) or re-apply any previously paid issue fee to the application identified above." Petitioner is advised that, whether a fee is indicated as being due or not, the Issue Fee Transmittal Form* ***must*** *be completed and timely submitted to avoid abandonment. Note the language in bold text on the first page of the Notice of Allowance and Fee(s) Due (PTOL-85).*

UNITED STATES PATENT AND TRADEMARK OFFICE

Commissioner for Patents
United States Patent and Trademark Office
P.O. Box 1450
Alexandria, VA 22313-1450
www.uspto.gov

Date: November 6, 2006

Patent No. : 7,111,782 B2
Issued : September 26, 2006
Inventor : Homewood, et al.
Title : **SYSTEMS AND METHODS FOR PROVIDING SECURITY IN A VOTING MACHINE**
Docket No : 115601

Re: Request for Certificate of Correction

Consideration has been given your request for the issuance of a certificate of correction, for the above-identified patent under the provision of Rule 1.322 or 1.323.

Respecting the alleged error, in the Assignee, or Firm is printed solely in accordance with the PTOL-85b (Issue Fee Transmittal), submitted at the time of payment of the base issue fee. Therefore, no correction(s) is in order here under United States Codes (U.S.C.) 254 or 255 and the Code of Federal Regulation (C.F.R.) 1.322 or 1.323.

In view of the foregoing your request is hereby denied.

Any petition under 37 CFR 1.183 should be directed to the attention of the Assistant Commissioner for Patents, using the following mailing address or FAX number.

By Mail: Mail Stop PETITIONS
Commissioner for Patents
Post Office Box 1450
Washington, D.C. 22313-1450

By Fax: (571) 273-8300
Attn.: Office of Petitions

If the Petition under 37 CFR 1.182 (required fee currently $130), is filed and granted, the Patentee would be entitled to certificate of correction under 37 CFR 1.323 (required fee currently 100).

Further correspondence concerning this matter should be filed and directed to Decisions and Certificates of Correction Branch. Any response must be filed within a four week period.

Elisha Evans
Newman Cecelia
Decisions & Certificates
of Correction Branch
(703) 308-9390

OLIFF & BERRIDGE, PLC
P.O. BOX 19928
ALEXANDRIA VA 22320

CBN /eme

UNITED STATES PATENT AND TRADEMARK OFFICE

Commissioner for Patents
United States Patent and Trademark Office
P.O. Box 1450
Alexandria, VA 22313-1450
www.uspto.gov

November 6, 2006

Patent No. : 7,111,782 B2
Ser. No. : 10/811969
Inventor(s) : Homewood, et al.
Issued : September 26, 2006
Title : **SYSTEMS AND METHODS FOR PROVIDING SECURITY IN A VOTING MACHINE**
Docket No. : 115601

Re: Request for Certificate of Correction

Consideration has been given your request for the issuance of a certificate of correction for the above-identified patent under the provisions of Rule(s) 1.322 and/or 1.323.

Assignees' names and addresses (assignment data) printed in a patent, are based *solely* on information supplied in the appropriate space for identifying the assignment data, i.e., item 3 of the Issue Fee Transmittal Form PTOL-85B. Granting of a request under 37 CFR 3.81(b) is required to correct applicant's error providing ***incorrect or erroneous*** assignment data, *before* issuance of a Certificate of Correction, under 37 CFR 1.323 *(see Manual of Patent Examining Procedures (M.P.E.P) Chp.1400, sect. 1481).* This procedure is required *at any time after the issue fee is paid*, including after issuance of the patent.

In view of the foregoing, your request, in this mater, is hereby denied.

A request to correct the Assignee under 37 CFR 3.81(b) should include:

A. **the processing fee set forth in 37 CFR 1.117(h) (currently $130);**
B. a statement that the failure to include the correct assignee name on the PTOL-85B was inadvertent; and
C. a copy of the Notice of Recordation of Assignment Document, reflecting the reel and frame number where the assignment(s) is recorded and/or reflecting proof of *the date* the assignment was submitted for recordation.

In the Request, Applicant(s) may request that the file be forwarded to Certificates of Correction Branch, for issuance of a Certificate of Correction, if the Request is granted.

Any request under 37 CFR 3.81(b) should be directed to the following address or facsimile number:

By mail: Mail Stop PETITIONS
Commissioner for Patents
Post Office Box 1450
Alexandria, VA 22313-1450

By hand: Customer Service Window
Mail Stop Petitions
Randolph Building
401 Dulany Street
Alexandria, VA 22314

By fax: (571) 273-8300
ATTN: Office of Petitions

If a fee (currently $100) was previously submitted for consideration of a Request for Certificate of Correction, under CFR 1.323, to correct assignment data, , no additional fee is required.

Elisha Evans
For Cecelia Newman
Decisions & Certificates
of Correction Branch
(703) 308-9390 ext. 110 or (703) 308-8309

OLIFF & BERRIDGE, PLC
P.O. BOX 19928
ALEXANDRIA VA 22320

CBN/eme

UNITED STATES PATENT AND TRADEMARK OFFICE

Commissioner for Patents
United States Patent and Trademark Office
P.O. Box 1450
Alexandria, VA 22313-1450
www.uspto.gov

OLIFF & BERRIDGE, PLC
P.O. BOX 19928
ALEXANDRIA, VA 22320

COPY MAILED

MAR 1 5 2007

OFFICE OF PETITIONS

In re Patent of Homewood et al. :
Patent No. 7,111,782 :
Issue Date: September 26, 2006 :
Application No. 10/811,969 :
Filing Date: March 30, 2004 :
Attorney Docket No. 115601 :

Decision on Petition

This is a decision in response to the paper filed November 27, 2006, which is being treated as a request under 37 CFR 3.81 to accept the correction of the assignee data on the front page of the above-identified patent.

The request under 37 CFR 3.81 is **GRANTED**.

37 CFR 3.81(b) reads:

> Any request for issuance of an application in the name of the assignee submitted after the date of payment of the issue fee, and any request for a patent to be corrected to state the name of the assignee, must state that the assignment was submitted for recordation as set forth in § 3.11 before issuance of the patent, and must include a request for a certificate of correction under § 1.323 of this chapter (accompanied by the fee set forth in § 1.20(a)) and the processing fee set forth in § 1.17(i) of this chapter.

In other words, the request under 37 CFR 3.81(b) will be granted when:

(1) a request under 37 CFR 3.81 and the fee set forth in 37 CFR 1.17(i) are filed,
(2) the assignment was submitted for recordation prior to issuance of the patent, and
(3) a request for a certificate of correction and the fee set forth in 37 CFR 1.20(a) are submitted.

Patentees have met the requirements set forth above. Therefore, the request is granted.

The Certificates of Correction Branch will issue the requested certificate of correction in due course.

Telephone inquiries regarding this communication should be directed to Petitions Attorney Steven Brantley at (571) 272-3203.

Charles Steven Brantley
Senior Petitions Attorney
Office of Petitions

UNITED STATES PATENT AND TRADEMARK OFFICE

UNITED STATES DEPARTMENT OF COMMERCE
United States Patent and Trademark Office
Address: COMMISSIONER FOR PATENTS
P.O. Box 1450
Alexandria, Virginia 22313-1450
www.uspto.gov

MINTZ, LEVIN, COHN, FERRIS, GLOVSKY & POPEO, P.C.
ONE FINANCIAL CENTER
BOSTON, MA 02111

Mail Date: 04/21/2010

Applicant	: Matthias Kaiser	: DECISION ON REQUEST FOR
Patent Number	: 7587324	: RECALCULATION of PATENT
Issue Date	: 09/08/2009	: TERM ADJUSTMENT IN VIEW
Appliction No	: 10/811,971	: OF WYETH AND NOTICE OF INTENT TO
Filed	: 03/30/2004	: ISSUE CERTIFICATE OF CORRECTION
		:

The Request for Recalculation is **GRANTED** to the extent indicated.

The patent term adjustment has been determined to be **1398** days. The USPTO will *sua sponte* issue a certificate of correction reflecting the amount of PTA days determined by the recalculation.

Prior to the issuance of the certificate of correction, the USPTO will afford patentee an opportunity to be heard and request reconsideration. Accordingly, patentee has **one month or thirty (30) days**, whichever is longer, to file a request for reconsideration of this patent term adjustment calculation. See 35 U.S.C. 154(b)(3)(B)(ii) and 37 CFR 1.322(a)(4). No extensions of time will be granted under 37 CFR 1.136.

Patentee should use document code PET.OP if electronically filing a request for reconsideration of this patent term adjustment calculation. The patentee must also include the information required by 37 CFR 1.705(b)(2) and the fee required by 37 CFR 1.18(e). If patentee does not file a timely request for reconsideration of this patent term adjustment calculation including the information required by 37 CFR 1.705(b)(2) and the fee required by 37 CFR 1.18(e), the USPTO will issue a certificate of correction reflecting the PTA determination noted above.

Patentee should be aware that in order to preserve the right to review in the United States District Court for the District of Columbia of the USPTO patent term adjustment determination, patentee must ensure that he or she also take the steps required under 35 U.S.C. 154(b)(4)(A) in a timely manner. Nothing in the request for recalculation should be construed as providing an alternative time frame for commencing a civil action under 35 U.S.C. 154(b)(4)(A).

Any questions concerning this decision should be directed to the Office of Patent Legal Administration at 571-272-7702.

UNITED STATES PATENT AND TRADEMARK OFFICE

UNITED STATES DEPARTMENT OF COMMERCE
United States Patent and Trademark Office
Address: COMMISSIONER FOR PATENTS
P.O. Box 1450
Alexandria, Virginia 22313-1450
www.uspto.gov

North Star Intellectual Property Law, PC
P.O. Box 34688
Washington, DC 20043

Mail Date: 04/21/2010

Applicant	: Hyun-kwon Chung	: DECISION ON REQUEST FOR
Patent Number	: 7596303	: RECALCULATION of PATENT
Issue Date	: 09/29/2009	: TERM ADJUSTMENT IN VIEW
Appliction No	: 10/811,976	: OF WYETH AND NOTICE OF INTENT TO
Filed	: 03/30/2004	: ISSUE CERTIFICATE OF CORRECTION
		:

The Request for Recalculation is **GRANTED** to the extent indicated.

The patent term adjustment has been determined to be **1583** days. The USPTO will *sua sponte* issue a certificate of correction reflecting the amount of PTA days determined by the recalculation.

Prior to the issuance of the certificate of correction, the USPTO will afford patentee an opportunity to be heard and request reconsideration. Accordingly, patentee has **one month or thirty (30) days**, whichever is longer, to file a request for reconsideration of this patent term adjustment calculation. See 35 U.S.C. 154(b)(3)(B)(ii) and 37 CFR 1.322(a)(4). No extensions of time will be granted under 37 CFR 1.136.

Patentee should use document code PET.OP if electronically filing a request for reconsideration of this patent term adjustment calculation. The patentee must also include the information required by 37 CFR 1.705(b)(2) and the fee required by 37 CFR 1.18(e). If patentee does not file a timely request for reconsideration of this patent term adjustment calculation including the information required by 37 CFR 1.705(b)(2) and the fee required by 37 CFR 1.18(e), the USPTO will issue a certificate of correction reflecting the PTA determination noted above.

Patentee should be aware that in order to preserve the right to review in the United States District Court for the District of Columbia of the USPTO patent term adjustment determination, patentee must ensure that he or she also take the steps required under 35 U.S.C. 154(b)(4)(A) in a timely manner. Nothing in the request for recalculation should be construed as providing an alternative time frame for commencing a civil action under 35 U.S.C. 154(b)(4)(A).

Any questions concerning this decision should be directed to the Office of Patent Legal Administration at 571-272-7702.

UNITED STATES PATENT AND TRADEMARK OFFICE

Commissioner for Patents
United States Patent and Trademark Office
P.O. Box 1450
Alexandria, VA 22313-1450
www.uspto.gov

KENYON & KENYON LLP
1500 K STREET N.W.
SUITE 700
WASHINGTON DC 20005

11/21/07

In re Application of Yoshikawa, Shigettaka et al Application No. 10~~/388,984~~ 10/811984 Filed: Mar. 30. 2004 Attorney Docket No. 010517/225 For: MOUNTING STRUCTURE AND METHOD FOR HEAT ACCUMULATION TANK	DECISION ON REQUEST TO PARTICIPATE IN PATENT PROSECUTION HIGHWAY PILOT PROGRAM AND PETITION 37 CFR 1.102(d)

This is a decision on the request to participate in the Patent Prosecution Highway (PPH) pilot program and the renewed petition under 37 CFR 1.102(d), filed Nov. 2, 2007, to make the above-identified application special.

The request and petition are **dismissed**.

A grantable request to participate in the PPH pilot program and petition to make special require:

(1) The U.S. application must validly claim priority under 35 U.S.C. 119(a) to one or more applications filed in the JPO;
(2) Applicant must submit a copy of the allowable/patentable claim(s) from the JPO application(s) along with an English translation thereof and a statement that the English translation is accurate;
(3) All the claims in the U.S. application must sufficiently correspond or be amended to sufficiently correspond to the allowable/patentable claim(s) in the JPO application(s);
(4) Examination of the U.S. application has not begun;
(5) Applicant must submit a copy of all the office actions from each of the JPO application(s) containing the allowable/patentable claim(s) along with an English translation thereof and a statement that the English translation is accurate;
(6) Applicant must submit an IDS listing the documents cited by the JPO examiner in the JPO office action along with copies of documents except U.S. patents or U.S. patent application publications; and
(7). The required petition fee under 37 CFR 1.17(h).

The request to participate in the PPH pilot program and petition met all conditions except Item #5 above. The request to participate in the PPH pilot program and petition fail to include: a copy of the Japanese language Office action (refusal) and its English translation.

Applicant is given a time period of **ONE MONTH or THIRTY DAYS**, whichever is longer, from the mailing date of this decision to correct the deficiencies. **NO EXTENSION OF TIME UNDER 37 CFR 1.136 IS PERMITTED.** If the deficiencies are not corrected with the time period given, the application will await action in its regular turn.

Response must be faxed to Henry C. Yuen, at 571-273-4856. Telephone inquiries concerning this decision should be directed to Henry C. Yuen, at 571-272-4856.

Henry C. Yuen
Special Programs Examiner
Technology Center 3700
Tel: 571-272-4856

UNITED STATES PATENT AND TRADEMARK OFFICE

Commissioner for Patents
United States Patent and Trademark Office
P.O. Box 1450
Alexandria, VA 22313-1450
www.uspto.gov

KENYON & KENYON LLP
1500 K STREET N.W.
SUITE 700
WASHINGTON DC 20005

In re Application of	:	
Yoshikawa, Shigettaka et al	:	DECISION ON REQUEST TO
Application No. 10/811,984	:	PARTICIPATE IN PATENT
Filed: Mar. 30. 2004	:	PROSECUTION HIGHWAY
Attorney Docket No. 010517/225	:	PILOT PROGRAM AND PETITION
For: MOUNTING STRUCTURE AND	:	37 CFR 1.102(d)
METHOD FOR HEAT	:	
ACCUMULATION TANK	:	

This is a decision on the renewed request to participate in the Patent Prosecution Highway (PPH) pilot program under 37 CFR 1.102(d), filed Dec. 7, 2007, to make the above-identified application special.

The request and petition are **GRANTED**.

A grantable request to participate in the PPH pilot program and petition to make special require:

(1) The U.S. application must validly claim priority under 35 U.S.C. 119(a) to one or more applications filed in the JPO;
(2) Applicant must submit a copy of the allowable/patentable claim(s) from the JPO application(s) along with an English translation thereof and a statement that the English translation is accurate;
(3) All the claims in the U.S. application must sufficiently correspond or be amended to sufficiently correspond to the allowable/patentable claim(s) in the JPO application(s);
(4) Examination of the U.S. application has not begun;
(5) Applicant must submit a copy of all the office actions from each of the JPO application(s) containing the allowable/patentable claim(s) along with an English translation thereof and a statement that the English translation is accurate;
(6) Applicant must submit an IDS listing the documents cited by the JPO examiner in the JPO office action along with copies of documents except U.S. patents or U.S. patent application publications; and
(7) The required petition fee under 37 CFR 1.17(h).

The request to participate in the PPH pilot program and petition comply with the above requirements. In particular, receipt of a copy of the Japanese language Office action (refusal) and its English translation is acknowledged. Accordingly, the above-identified application has been accorded "special" status.

Telephone inquiries concerning this decision should be directed to Henry C. Yuen, at 571-272-4856. All other inquiries concerning the examination or status of the application should be directed to Frantz Jules, SPE of Art Unit 3744, 571-272-6681. The application is being forwarded to the examiner for action on the merits commensurate with this decision.

Henry C. Yuen, Special Programs Examiner
Technology Center 3700 – Mechanical Engineering,
Manufacturing and Products
571-272-4856

UNITED STATES PATENT AND TRADEMARK OFFICE

Commissioner for Patents
United States Patent and Trademark Office
P.O. Box 1450
Alexandria, VA 22313-1450
www.uspto.gov

HUNTON & WILLIAMS LLP
INTELLECTUAL PROPERTY DEPARTMENT
1900 K STREET, N.W.
SUITE 1200
WASHINGTON DC 20006-1109

COPY MAILED
AUG 0 2 2006
OFFICE OF PETITIONS

In re Application of	:	
Yu et al.	:	
Application No. 10/811,998	:	ON PETITION
Filed: March 30, 2004	:	
Attorney Docket No. 59210.000052	:	

This is a decision on the petition under 37 CFR 1.102(c)(1), filed July 6, 2006, to make the above-identified application special based on applicant's age as set forth in M.P.E.P. § 708.02, Section IV.

The petition is **GRANTED**.

A grantable petition to make an application special under 37 CFR 1.102(c)(1) and MPEP § 708.02, Section IV: Applicant's Age must be accompanied by evidence showing that at least one of the applicants is 65 years of age, or more, such as a birth certificate or a statement by applicant. No fee is required.

The instant petition includes Affidavits from both applicants, Ruey Yu and Eugene Van Scott. Accordingly, the above-identified application has been accorded "special" status.

Telephone inquiries concerning this decision should be directed to the undersigned at 571-272-3206. All other inquiries concerning either the examination or status of the application should be directed to the Technology Center.

This matter is being referred to the Technology Center Art Unit 1616 for action on the merits commensurate with this decision.

Liana Chase
Petitions Examiner
Office of Petitions

UNITED STATES PATENT AND TRADEMARK OFFICE

Commissioner for Patents
United States Patent and Trademark Office
P.O. Box 1450
Alexandria, VA 22313-1450
www.uspto.gov

HARNESS, DICKEY & PIERCE, P.L.C.
P.O. BOX 8910
RESTON VA 20195

JAN 17 2007

In re Application of: Ku et al
Application No. 10/812,003
Filed: 03/30/2004
Attorney Docket No. 2421-000037/US

Decision on Petition

This is a decision on the petition filed under 37 C.F.R. § 1.48 (a) on January 3, 2007 to correct inventorship.

The petition is GRANTED.

37 C.F.R. § 1.48 Correction of inventorship in a patent application, other than a reissue application, pursuant to 35 U.S.C. 116.

§ 1.48 Correction of inventorship in a patent application, other than a reissue application, pursuant to 35 U.S.C. 116.
(a) Nonprovisional application after oath /declaration filed . If the inventive entity is set forth in error in an executed § 1.63 oath or declaration in a nonprovisional application, and such error arose without any deceptive intention on the part of the person named as an inventor in error or on the part of the person who through error was not named as an inventor, the inventorship of the nonprovisional application may be amended to name only the actual inventor or inventors. If the nonprovisional application is involved in an interference, the amendment must comply with the requirements of this section and must be accompanied by a motion under § 1.634. Amendment of the inventorship requires:

(1) A request to correct the inventorship that sets forth the desired inventorship change;
(2) A statement from each person being added as an inventor and from each person being deleted as an inventor that the error in inventorship occurred without deceptive intention on his or her part;
(3) An oath or declaration by the actual inventor or inventors as required by § 1.63 or as permitted by §§ 1.42, 1.43 or § 1.47;
(4) The processing fee set forth in § 1.17(i); and
(5) If an assignment has been executed by any of the original named inventors, the written consent of the assignee (see § 3.73(b) of this chapter).

Petitioner has complied with all the above requirements by submitting the required documents in conjunction with the processing fee to correct inventorship.

The inventorship will be corrected by adding inventors: Sug-Woo Jung and Sun-Pil Youn

The application file will be forwarded to the Technical Support staff for Technology Center 2800 for entry of the correction of inventorship.

Inquiries regarding this decision should be directed to Michael Lebentritt at (571) 272-1873.

Sharon Gibson, Director
Technology Center 2800
Semiconductors, Electrical and Optical
Systems and Components

UNITED STATES PATENT AND TRADEMARK OFFICE

UNITED STATES DEPARTMENT OF COMMERCE
United States Patent and Trademark Office
Address: COMMISSIONER FOR PATENTS
P.O. Box 1450
Alexandria, Virginia 22313-1450
www.uspto.gov

North Star Intellectual Property Law, PC
P.O. Box 34688
Washington, DC 20043

Mail Date: 04/21/2010

Applicant	: Hyun-kwon Chung	: DECISION ON REQUEST FOR
Patent Number	: 7627230	: RECALCULATION of PATENT
Issue Date	: 12/01/2009	: TERM ADJUSTMENT IN VIEW
Appliction No	: 10/812,010	: OF WYETH AND NOTICE OF INTENT TO
Filed	: 03/30/2004	: ISSUE CERTIFICATE OF CORRECTION
		:

The Request for Recalculation is **GRANTED** to the extent indicated.

The patent term adjustment has been determined to be **1619** days. The USPTO will *sua sponte* issue a certificate of correction reflecting the amount of PTA days determined by the recalculation.

Prior to the issuance of the certificate of correction, the USPTO will afford patentee an opportunity to be heard and request reconsideration. Accordingly, patentee has **one month or thirty (30) days**, whichever is longer, to file a request for reconsideration of this patent term adjustment calculation. See 35 U.S.C. 154(b)(3)(B)(ii) and 37 CFR 1.322(a)(4). No extensions of time will be granted under 37 CFR 1.136.

Patentee should use document code PET.OP if electronically filing a request for reconsideration of this patent term adjustment calculation. The patentee must also include the information required by 37 CFR 1.705(b)(2) and the fee required by 37 CFR 1.18(e). If patentee does not file a timely request for reconsideration of this patent term adjustment calculation including the information required by 37 CFR 1.705(b)(2) and the fee required by 37 CFR 1.18(e), the USPTO will issue a certificate of correction reflecting the PTA determination noted above.

Patentee should be aware that in order to preserve the right to review in the United States District Court for the District of Columbia of the USPTO patent term adjustment determination, patentee must ensure that he or she also take the steps required under 35 U.S.C. 154(b)(4)(A) in a timely manner. Nothing in the request for recalculation should be construed as providing an alternative time frame for commencing a civil action under 35 U.S.C. 154(b)(4)(A).

Any questions concerning this decision should be directed to the Office of Patent Legal Administration at 571-272-7702.

UNITED STATES PATENT AND TRADEMARK OFFICE

Commissioner for Patents
United States Patent and Trademark Office
P.O. Box 1450
Alexandria, VA 22313-1450
www.uspto.gov

OLIFF & BERRIDGE, PLC
P.O. BOX 19928
ALEXANDRIA, VA 22320

COPY MAILED
DEC 21 2006
OFFICE OF PETITIONS

In re Application of
Von Friedrich C. Paterro
Application No. 10/812,018
Filed: March 30, 2004
Attorney Docket No. 104148

DECISION ON REQUEST TO WITHDRAW FROM RECORD

This is a decision on the Request to Withdraw as attorney or agent of record under 37 CFR § 1.36(b), filed December 6, 2006.

The request is **APPROVED**.

A grantable request to withdraw as attorney/agent of record must be signed by every attorney/agent seeking to withdraw or contain a clear indication that one attorney is signing on behalf of another/others. A request to withdraw will not be approved unless at least 30 (thirty) days would remain between the date of approval and the later of the expiration date of a time to file a response or the expiration date of the maximum time period which can be extended under 37 CFR § 1.136(a).

The request was signed by James Oliff on behalf of all attorneys/agents of record.

James Oliff and all the attorney/agents of record have been withdrawn. Therefore, applicant is reminded that there are no attorneys/agents of record at this time.

The correspondence address of record has been changed and the new correspondence address is the address indicated below.

This application is being referred to Technology Center Art Unit 3644, for consideration of the Request for Continued Examination (RCE) filed November 9, 2006.

Telephone inquiries concerning this decision should be directed to the undersigned at (571) 272-3226.

Andrea Smith
Petitions Examiner
Office of Petitions

cc: Von Friedrich C. Paterro
23-B Makati Tuscany
6751 Ayala Avenue
Makati City, PHILLIPINES ZC-1226

UNITED STATES PATENT AND TRADEMARK OFFICE

UNITED STATES DEPARTMENT OF COMMERCE
United States Patent and Trademark Office
Address: COMMISSIONER FOR PATENTS
P.O. Box 1450
Alexandria, Virginia 22313-1450
www.uspto.gov

APPLICATION NUMBER	FILING OR 371 (c) DATE	FIRST NAMED APPLICANT	ATTY. DOCKET NO./TITLE
10/812,018	03/30/2004	Von Friedrich C. Paterro	104148

CONFIRMATION NO. 2793

OC000000021693392

25944
OLIFF & BERRIDGE, PLC
P.O. BOX 19928
ALEXANDRIA, VA 22320

Date Mailed: 12/21/2006

NOTICE REGARDING CHANGE OF POWER OF ATTORNEY

This is in response to the Power of Attorney filed 12/06/2006.

- The withdrawal as attorney in this application has been accepted. Future correspondence will be mailed to the new address of record. 37 CFR 1.33.

ANDREA M SMITH
OP (571) 272-3226

FORMER ATTORNEY/AGENT COPY

UNITED STATES PATENT AND TRADEMARK OFFICE

Commissioner for Patents
United States Patent and Trademark Office
P.O. Box 1450
Alexandria, VA 22313-1450
www.uspto.gov

July 2005

WENDEROTH, LIND, & PONACK, L.L.P.
2033 K STREET N.W.
SUITE 800
WASHINGTON, DC 20006-1021

AUG 26 2005

In re Application of: SHINOBU NAKAYA ET AL Serial No.: 10/812,026 Filed: 30 March 2004 Title: SURFACE ACOUSTIC WAVE DEVICE	DECISION ON PETITION TO MAKE SPECIAL UNDER 37 C.F.R. § 1.102(d)

This is a decision on the petition filed on February 02, 2005, to make the above-identified application special under the accelerated examination procedure set forth in MPEP § 708.02(VIII) in accordance with 37 C.F.R. § 1.102(d).

The petition to make the application special is **GRANTED**.

In support of the petition, petition provides: a) the applicable petition fee; b) a statement that a pre-examination search was made, including the search areas; c) a statement that all claims are directed towards a single invention, and an intent to elect without traverse should election be required; d) a copy of each of the references deemed most closely related to the claimed subject matter; and e) a detailed discussion of each of a number of references submitted as being pertinent to patentability, pointing out how the claimed subject matter is distinguishable over those references.

For accelerated examination under MPEP § 708.02(VIII) in accordance with 37 C.F.R. § 1.102(d), a petition with the following showing is required: a) a petition fee; b) all claims are directed to a single invention; c) a statement that a pre-examination search was made, including the search areas; d) a copy of each of the (non-US) references deemed most closely related to the claimed subject matter; and e) a detailed discussion of the references pointing out with the particularity required by 37 CFR 1.111 (b) and (c), how the claimed subject matter is distinguishable over the references.

The requirements of MPEP § 708.02(VIII)(a) – (e) are considered to have been met. Should the examiner determine that more than one invention is present, the special nature of the application remains dependent on applicant's election without traverse.

For the above-mentioned reasons, the petition is granted. The application will be advanced out of turn for examination, and will continue to be treated as special throughout the entire prosecution in the Office according to the procedure set forth in MPEP § 708.02(VIII).

The delay in considering the petition and issuance of this decision is regretted.

Any inquiry regarding this decision should be directed to Hien H. Phan, Special Program Examiner, at (571) 272-1606.

Hien H. Phan, Special Program Examiner
Technology Center 2800 - Semiconductors,
Electrical & Optical Systems & Components

UNITED STATES PATENT AND TRADEMARK OFFICE

Commissioner for Patents
United States Patent and Trademark Office
P.O. Box 1450
Alexandria, VA 22313-1450
www.uspto.gov

JONATHAN SPANGLER
NU VASIVE, INC.
4545 TOWNE CENTRE COURT
SAN DIEGO CA 92121

COPY MAILED

JAN 2 0 2006

OFFICE OF PETITIONS

In re Application of	:	
Hoey et al.	:	
Application No. 10/812,038	:	ON PETITION
Filed: March 29, 2004	:	
Attorney Docket No. 059US2	:	

This is a decision on the petition under 37 CFR 1.181, filed August 8, 2005, requesting the withdrawal of the holding of abandonment in the above-identified application. A petition under 37 CFR 1.137(b) has also been submitted, in the alternative.

The petition to withdraw the holding of abandonment is **GRANTED.**

The petition under 37 CFR 1.137(b) is **DISMISSED AS MOOT.**

The above-identified application was held abandoned for failure to timely reply to the non-final Office action mailed September 21, 2004, which set a shortened statutory period for reply of three (3) months. A reply was due on or before December 21, 2004. A Notice of Abandonment was mailed on May 4, 2005.

Petitioner states that the reply was in fact timely filed. To support this assertion, petitioner has submitted a copy of the return postcard, which acknowledges receipt by the U.S. Patent and Trademark Office (USTPO) on March 28, 2005 of 1. Transmittal Form; 2. Petition for Extension of Time; 3. Responsive Amendment; 4. Copy of Declaration from Patent Application; 5. Copy of Inventor Information Page from Parent Application; and 6. Return Postcard. Additionally, petitioner has supplied a copy of the previously mailed correspondence, which bears a certificate of mailing date of March 21, 2005.

A review of the application file confirms receipt of the reply submitted on March 28, 2001. However, the serial number was incorrectly listed as 10/812,**938**. Under current Office procedure, a response that has an incorrect application number is handled in accordance with MPEP 508.03. If a paper having an incorrect application number contains sufficient information to identify the correct application and was timely filed, the holding of abandonment will be withdrawn. In reviewing the papers submitted, it is concluded that the information contained thereon was sufficient to associate the papers with the instant file.

Petitioner is cautioned to ensure that the correct identifying data appears on all correspondence submitted to the USPTO to avoid situations of the nature which occurred in the present application.

In view of the above, the holding of abandonment is hereby withdrawn and the application restored to pending status.

A petition to withdraw the holding of abandonment under the provisions of 37 CFR 1.181 does not require a fee. Accordingly, the $750.00 petition fee will be credited to petitioner's deposit account as authorized.

The Office sincerely apologizes for the inconvenience caused the petitioner in this matter.

This matter is being referred to Technology Center AU 3736 for further examination on the merits.

Telephone inquiries concerning this decision should be directed to Petitions Examiner Liana Chase at (571) 272-3206. All other inquiries should be directed to the Technology Center.

Frances Hicks

Frances Hicks
Petitions Examiner
Office of Petitions

UNITED STATES PATENT AND TRADEMARK OFFICE

Commissioner for Patents
United States Patent and Trademark Office
P.O. Box 1450
Alexandria, VA 22313-1450
www.uspto.gov

DREIER LLP
499 PARK AVE.
NEW YORK NY 10022

COPY MAILED

APR 17 2008

OFFICE OF PETITIONS

In re Application of	:	
Colin H. Self et al	:	DECISION ON PETITIONS
Application No. 10/812,044	:	UNDER 37 CFR 1.78(a)(3)
Filed: March 29, 2004	:	AND 37 CFR 1.55(c)
Attorney Docket No. 602314-004	:	

This is a decision on the petition filed April 6, 2007, which is being treated under 37 CFR 1.78(a)(3) and 37 CFR 1.55(c) to accept an unintentionally delayed claim under 35 U.S.C. §§120 and 365(c) for the benefit of priority to the prior-filed PCT application, and under 35 U.S.C. § 119(a)-(d) for the benefit of priority to a prior-filed foreign application, as set forth in the amendment filed July 5, 2006.

The petitions are **DISMISSED.**

A petition for acceptance of a claim for late priority under 37 CFR 1.78(a)(3) is only applicable to those applications filed on or after November 29, 2000. Further, the petition is appropriate only after the expiration of the period specified in 37 CFR 1.78(a)(2)(ii). In addition, the petition under 37 CFR 1.78(a)(3) must be accompanied by:

(1) the reference required by 35 U.S.C. § 120 and 37 CFR 1.78(a)(2)(i) of the prior-filed application, unless previously submitted;
(2) the surcharge set forth in § 1.17(t); and
(3) a statement that the entire delay between the date the claim was due under 37 CFR 1.78(a)(2)(ii) and the date the claim was filed was unintentional. The Director may require additional information where there is a question whether the delay was unintentional.

The petition does not comply with item (1)

37 CFR 1.78(a)(2)(i) requires that any nonprovisional application claiming the benefit of one or more prior-filed copending nonprovisional applications must contain or be amended to contain a reference to each such prior-filed application, identifying it by application number (consisting of

the series code and serial number) and indicating the relationship of the applications. The relationship between the applications is whether the subject application is a continuation, divisional, or continuation-in-part of a prior-filed nonprovisional application. An example of a proper benefit claim is: "This application is a continuation of Application No. 10/---, filed---." A benefit claim that merely states: "This application claims the benefit of Application No. 10/---, filed---," does not comply with 37 CFR 1.72(a)(2)(i) since the proper relationship, which includes the type of continuing application, is not stated. Also, the status of each nonprovisional parent application (if it is patented or abandoned) should also be indicated, following the filing date of the parent nonprovisional application. *See* MPEP Section 201.11, Reference to Prior Nonprovisional Applications. The amendment fails to comply with the provisions of 37 CFR 1.78(a)(2)(i) and is therefore unacceptable. The relationship of the PCT application to the instant application not specified.

As to the benefit claim under 37 CFR 1.55(c):

A petition under 37 CFR 1.55(c) to accept an unintentionally delayed claim for priority requires:

(1) The nonprovisional application claiming the benefit of an earlier filing date must be filed on or after November 29, 2000;
(2) the claim submitted with the petition must identify the prior foreign application for which priority is claimed, as well as any foreign application for the same subject matter and having a filing date before that of the application for which priority is claimed, by the application number, country, and the filing date, **and be included either in an oath or declaration (37 CFR 1.63(c)(2)) or in an Application Data Sheet (37 CFR 1.76(b)(6);**
(3) the surcharge as set forth in 37 CFR 1.17(t);
(4) a statement that the entire delay between the date the claim was due under 37 CFR 1.55(a)(1) and the date the claim was filed was unintentional. (The Director may require additional information where there is a question whether the delay was unintentional); and
(5) the above-identified nonprovisional application must be filed within 12 months of the filing date of the foreign application.

The petition under 37 CFR 1.55(c) is **DISMISSED**.

The petition fails to comply with item (2) above. In this regard, a review of the file record fails to disclose that the priority information was included in an oath or declaration or in an Application Data Sheet (ADS) in accordance with 37 CFR 1.76(b)(6). Unless provided in an ADS, 37 CFR 1.63(c)(2) requires that the oath or declaration must identify the foreign application for patent (or inventor's certificate) for which priority is claimed under 37 CFR 1.55, and any foreign application having a filing date before that of the application on which priority is claimed, by specifying the application number, country, day, month, and year of its filing. *Note* MPEP 201.14.

Additionally, the amendment submitted with the instant petition improperly placed the claim for benefit to foreign Application No. 9322156.2, filed October 27, 1993 to be included with the domestic priority which is not in compliance with 37 CFR 1.63(c)(2).

Before the petition under 37 CFR § 1.78(a)(3) and 37 CFR § 1.55(c) can be granted, a renewed petition under 37 CFR § 1.78(a)(3) and 37 CFR § 1.55(c), in compliance with the above matters are required.

Further correspondence with respect to this matter should be addressed as follows:

By mail: Mail Stop PETITIONS
Commissioner for Patents
Post Office Box 1450
Alexandria, VA 22313-1450

By hand: Customer Service Window
Mail Stop Petitions
Randolph Building
401 Dulany Street
Alexandria, VA 22314

By fax: (571) 273-8300
ATTN: Office of Petitions

Any questions concerning this matter may be directed to the undersigned at (571) 272-3208.

Karen Creasy

Karen Creasy
Petitions Examiner
Office of Petitions

UNITED STATES PATENT AND TRADEMARK OFFICE

Commissioner for Patents
United States Patent and Trademark Office
P.O. Box 1450
Alexandria, VA 22313-1450
www.uspto.gov

DREIER LLP
499 PARK AVE.
NEW YORK NY 10022

COPY MAILED
AUG 19 2008

In re Application of	:	
Colin H. Self et al	:	DECISION ON PETITIONS
Application No. 10/812,044	:	UNDER 37 CFR 1.78(a)(3)
Filed: March 29, 2004	:	AND 37 CFR 1.55(c)
Attorney Docket No. 602314-004	:	

This is a decision on the renewed petition filed May 2, 2008, under 37 CFR 1.78(a)(3) and 37 CFR 1.55(c) to accept an unintentionally delayed claim under 35 U.S.C. §§120 and 365(c) for the benefit of priority to the prior-filed PCT application, and under 35 U.S.C. § 119(a)-(d) for the benefit of priority to a prior-filed foreign application.

The petitions are **DISMISSED.**

A petition for acceptance of a claim for late priority under 37 CFR 1.78(a)(3) is only applicable to those applications filed on or after November 29, 2000. Further, the petition is appropriate only after the expiration of the period specified in 37 CFR 1.78(a)(2)(ii). In addition, the petition under 37 CFR 1.78(a)(3) must be accompanied by:

(1) the reference required by 35 U.S.C. § 120 and 37 CFR 1.78(a)(2)(i) of the prior-filed application, unless previously submitted;
(2) the surcharge set forth in § 1.17(t); and
(3) a statement that the entire delay between the date the claim was due under 37 CFR 1.78(a)(2)(ii) and the date the claim was filed was unintentional. The Director may require additional information where there is a question whether the delay was unintentional.

The petition does not comply with item (1)

The amendment and ADS submitted with the instant petition improperly placed the claim for benefit to foreign Application No. PCTGB9402359, filed October 26, 1994 to be included with the domestic priority which is not in compliance with 37 CFR 1.63(c)(2). Additionally, PCTGB9402359 filing date is referenced as October 26, 1994 in the domestic benefit information and as October 16, 1994 in the foreign priority information. Clarification is required.

Before the petition under 37 CFR § 1.78(a)(3) and 37 CFR § 1.55(c) can be granted, a renewed petition under 37 CFR § 1.78(a)(3) and 37 CFR § 1.55(c), in compliance with the above matters are required.

Further correspondence with respect to this matter should be addressed as follows:

By mail: Mail Stop PETITIONS
Commissioner for Patents
Post Office Box 1450
Alexandria, VA 22313-1450

By hand: Customer Service Window
Mail Stop Petitions
Randolph Building
401 Dulany Street
Alexandria, VA 22314

By fax: (571) 273-8300
ATTN: Office of Petitions

Any questions concerning this matter may be directed to the undersigned at (571) 272-3208.

Karen Creasy

Karen Creasy
Petitions Examiner
Office of Petitions

UNITED STATES PATENT AND TRADEMARK OFFICE

UNITED STATES DEPARTMENT OF COMMERCE
United States Patent and Trademark Office
Address: COMMISSIONER FOR PATENTS
P.O. Box 1450
Alexandria, Virginia 22313-1450
www.uspto.gov

KENYON & KENYON LLP
1500 K STREET N.W.
SUITE 700
WASHINGTON, DC 20005

Mail Date: 04/21/2010

Applicant	: Reinhard H.H. Poetzsch	: DECISION ON REQUEST FOR
Patent Number	: 7653581	: RECALCULATION of PATENT
Issue Date	: 01/26/2010	: TERM ADJUSTMENT IN VIEW
Appliction No	: 10/812,055	: OF WYETH AND NOTICE OF INTENT TO
Filed	: 03/30/2004	: ISSUE CERTIFICATE OF CORRECTION
		:

The Request for Recalculation is **GRANTED** to the extent indicated.

The patent term adjustment has been determined to be **1119** days. The USPTO will *sua sponte* issue a certificate of correction reflecting the amount of PTA days determined by the recalculation.

Prior to the issuance of the certificate of correction, the USPTO will afford patentee an opportunity to be heard and request reconsideration. Accordingly, patentee has **one month or thirty (30) days**, whichever is longer, to file a request for reconsideration of this patent term adjustment calculation. See 35 U.S.C. 154(b)(3)(B)(ii) and 37 CFR 1.322(a)(4). No extensions of time will be granted under 37 CFR 1.136.

Patentee should use document code PET.OP if electronically filing a request for reconsideration of this patent term adjustment calculation. The patentee must also include the information required by 37 CFR 1.705(b)(2) and the fee required by 37 CFR 1.18(e). If patentee does not file a timely request for reconsideration of this patent term adjustment calculation including the information required by 37 CFR 1.705(b)(2) and the fee required by 37 CFR 1.18(e), the USPTO will issue a certificate of correction reflecting the PTA determination noted above.

Patentee should be aware that in order to preserve the right to review in the United States District Court for the District of Columbia of the USPTO patent term adjustment determination, patentee must ensure that he or she also take the steps required under 35 U.S.C. 154(b)(4)(A) in a timely manner. Nothing in the request for recalculation should be construed as providing an alternative time frame for commencing a civil action under 35 U.S.C. 154(b)(4)(A).

Any questions concerning this decision should be directed to the Office of Patent Legal Administration at 571-272-7702.

UNITED STATES PATENT AND TRADEMARK OFFICE

UNITED STATES DEPARTMENT OF COMMERCE
United States Patent and Trademark Office
Address: COMMISSIONER FOR PATENTS
P.O. Box 1450
Alexandria, Virginia 22313-1450
www.uspto.gov

STERNE, KESSLER, GOLDSTEIN & FOX P.L.L.C.
1100 NEW YORK AVENUE, N.W.
WASHINGTON, DC 20005

Mail Date: 04/21/2010

Applicant	: Simon Smith	: DECISION ON REQUEST FOR
Patent Number	: 7640151	: RECALCULATION of PATENT
Issue Date	: 12/29/2009	: TERM ADJUSTMENT IN VIEW
Appliction No	: 10/812,103	: OF WYETH AND NOTICE OF INTENT TO
Filed	: 03/30/2004	: ISSUE CERTIFICATE OF CORRECTION
		:

The Request for Recalculation is **GRANTED** to the extent indicated.

The patent term adjustment has been determined to be **1100** days. The USPTO will *sua sponte* issue a certificate of correction reflecting the amount of PTA days determined by the recalculation.

Prior to the issuance of the certificate of correction, the USPTO will afford patentee an opportunity to be heard and request reconsideration. Accordingly, patentee has **one month or thirty (30) days**, whichever is longer, to file a request for reconsideration of this patent term adjustment calculation. See 35 U.S.C. 154(b)(3)(B)(ii) and 37 CFR 1.322(a)(4). No extensions of time will be granted under 37 CFR 1.136.

Patentee should use document code PET.OP if electronically filing a request for reconsideration of this patent term adjustment calculation. The patentee must also include the information required by 37 CFR 1.705(b)(2) and the fee required by 37 CFR 1.18(e). If patentee does not file a timely request for reconsideration of this patent term adjustment calculation including the information required by 37 CFR 1.705(b)(2) and the fee required by 37 CFR 1.18(e), the USPTO will issue a certificate of correction reflecting the PTA determination noted above.

Patentee should be aware that in order to preserve the right to review in the United States District Court for the District of Columbia of the USPTO patent term adjustment determination, patentee must ensure that he or she also take the steps required under 35 U.S.C. 154(b)(4)(A) in a timely manner. Nothing in the request for recalculation should be construed as providing an alternative time frame for commencing a civil action under 35 U.S.C. 154(b)(4)(A).

Any questions concerning this decision should be directed to the Office of Patent Legal Administration at 571-272-7702.

UNITED STATES PATENT AND TRADEMARK OFFICE

UNITED STATES DEPARTMENT OF COMMERCE
United States Patent and Trademark Office
Address: COMMISSIONER FOR PATENTS
P.O. Box 1450
Alexandria, Virginia 22313-1450
www.uspto.gov

PVF -- SUN MICROSYSTEMS INC.
C/O PARK, VAUGHAN & FLEMING LLP
2820 FIFTH STREET
DAVIS, CA 95618-7759

Mail Date: 04/21/2010

Applicant	: James A. Mott	: DECISION ON REQUEST FOR
Patent Number	: 7609636	: RECALCULATION of PATENT
Issue Date	: 10/27/2009	: TERM ADJUSTMENT IN VIEW
Appliction No	: 10/812,109	: OF WYETH AND NOTICE OF INTENT TO
Filed	: 03/29/2004	: ISSUE CERTIFICATE OF CORRECTION
		:

The Request for Recalculation is **GRANTED** to the extent indicated.

The patent term adjustment has been determined to be **1212** days. The USPTO will *sua sponte* issue a certificate of correction reflecting the amount of PTA days determined by the recalculation.

Prior to the issuance of the certificate of correction, the USPTO will afford patentee an opportunity to be heard and request reconsideration. Accordingly, patentee has **one month or thirty (30) days**, whichever is longer, to file a request for reconsideration of this patent term adjustment calculation. See 35 U.S.C. 154(b)(3)(B)(ii) and 37 CFR 1.322(a)(4). No extensions of time will be granted under 37 CFR 1.136.

Patentee should use document code PET.OP if electronically filing a request for reconsideration of this patent term adjustment calculation. The patentee must also include the information required by 37 CFR 1.705(b)(2) and the fee required by 37 CFR 1.18(e). If patentee does not file a timely request for reconsideration of this patent term adjustment calculation including the information required by 37 CFR 1.705(b)(2) and the fee required by 37 CFR 1.18(e), the USPTO will issue a certificate of correction reflecting the PTA determination noted above.

Patentee should be aware that in order to preserve the right to review in the United States District Court for the District of Columbia of the USPTO patent term adjustment determination, patentee must ensure that he or she also take the steps required under 35 U.S.C. 154(b)(4)(A) in a timely manner. Nothing in the request for recalculation should be construed as providing an alternative time frame for commencing a civil action under 35 U.S.C. 154(b)(4)(A).

Any questions concerning this decision should be directed to the Office of Patent Legal Administration at 571-272-7702.

SPE RESPONSE FOR CERTIFICATE OF CORRECTION

Paper No.: _____

DATE : March 07, 2007

TO SPE OF : ART UNIT 2837

SUBJECT : Request for Certificate of Correction on Patent No.: **7169999 B2 – 10/812135**

A response is requested with respect to the accompanying request for a certificate of correction.

Please complete this form and return with file, within 7 days to:
Palm location **7580, Certificates of Correction Branch – South Tower – 9A22**
If response is for an IFW, **return to employee (named below) via PUBSCofC Team in MADRAS.**
With respect to the change(s) requested, correcting Office and/or Applicant's errors, should the patent read as shown in the certificate of correction (COCIN)? No new matter should be introduced, nor should the scope or meaning of the claims be changed.

Thank You For Your Assistance

Elisha Evans
Certificates of Correction Branch
Tel. No. 703-308-9390 EXT 110

The request for issuing the above-identified correction(s) is hereby:
Note your decision on the appropriate box.

- [x] **Approved** — All changes apply.
- [ ] **Approved in Part** — Specify below which changes **do not** apply.
- [ ] **Denied** — State the reasons for denial below.

Comments:

LINCOLN DONOVAN
SUPERVISORY PATENT EXAMINER

SPE

2837
Art Unit

UNITED STATES PATENT AND TRADEMARK OFFICE

Commissioner for Patents
United States Patent and Trademark Office
P.O. Box 1450
Alexandria, VA 22313-1450
www.uspto.gov

Paper No.

PLANTRONICS, INC.
IP Department/Legal
345 ENCINAL STREET
P.O. BOX 635
SANTA CRUZ CA 95060-0635

COPY MAILED

JUN 23 2008

OFFICE OF PETITIONS

In re Application of	:	
Kenneth Kannappan	:	
Application No. 10/812,175	:	DECISION ON PETITION
Filed: March 29, 2004	:	PURSUANT TO
Attorney Docket No. 01-7131	:	37 C.F.R. § 1.181(A)
Title: SPEECH TO DTMF	:	
CONVERSION	:	

This is a decision on the petition pursuant to 37 C.F.R. § 1.181(a) to withdraw the holding of abandonment, filed on April 22, 2008.

BACKGROUND

The above-identified application became abandoned for failure to reply in a timely manner to the non-final Office action, mailed June 18, 2007, which set a shortened statutory period for reply of three months. No response was received, and no extensions of time under the provisions of 37 C.F.R. § 1.136(a) were requested. Accordingly, the above-identified application became abandoned on December 19, 2007. A notice of abandonment was mailed on January 11, 2008.

RELEVANT PORTION OF THE C.F.R.

37 C.F.R. § 1.8(b) sets forth, *in toto*:

(b) In the event that correspondence is considered timely filed by being mailed or transmitted in accordance with paragraph (a) of this section, but not received in the U.S. Patent and Trademark Office after a reasonable amount of time has elapsed from the time of mailing or transmitting of the correspondence, or after the application is held to be abandoned, or after the proceeding is dismissed, terminated, or decided with prejudice, the correspondence will be considered timely if the party who forwarded such correspondence:

(1) Informs the Office of the previous mailing or transmission of the correspondence promptly after becoming aware that the Office has no evidence of receipt of the correspondence;

(2) Supplies an additional copy of the previously mailed or transmitted correspondence and certificate; and

(3) Includes a statement which attests on a personal knowledge basis or to the satisfaction of the Director to the previous timely mailing or transmission. If the correspondence was sent by facsimile transmission, a copy of the sending unit's report confirming transmission may be used to support this statement.

ANALYSIS

With the present petition, Petitioner has alleged that a response was timely filed. Petitioner has further included a copy of this response (an amendment along with a petition for a three-month extension of time), and it is noted that it contains a certificate of mailing dated December 18, 2007. Petitioner has also included a statement that attests on a personal knowledge basis to the previous timely mailing.

Furthermore, a copy of this response has been located in the electronic file (received in the Office on January 14, 2008, subsequent to the mailing of the notice of abandonment)[1].

Considering the facts and circumstances of the delay at issue, as set forth on petition, it is concluded that Petitioner has met his burden of establishing that a response was timely submitted, pursuant to 37 C.F.R. § 1.8.

Accordingly, the petition pursuant to 37 C.F.R. § 1.181(a) is **GRANTED**. The holding of abandonment is **WITHDRAWN**.

Petitioner may find it beneficial to view Private PAIR within a fortnight of the present decision to ensure that the withdrawal of the holding of abandonment has been acknowledged by the Technology Center in response to this decision. It is noted that all inquiries with regard to any failure of that change in status should be directed to the Technology Center where that

1 It is noted that Office records confirm that the fee that is associated with the filing of a petition for a three-month extension of time was received in the Office on January 15, 2008.

change of status must be effected - **the Office of Petitions cannot effectuate a change of status.**

The Technology Center will be notified of this decision. The Technology Center's support staff will notify the Examiner of this decision, so that the amendment that was received with the present petition (originally received in the Office on January 14, 2008) can be processed.

Telephone inquiries regarding this decision should be directed to the undersigned at (571) 272-3225[2]. All other inquiries concerning examination procedures or status of the application should be directed to the Technology Center.

/Paul Shanoski/
Paul Shanoski
Senior Attorney
Office of Petitions

2 Petitioner will note that all practice before the Office should be in writing, and the action of the Office will be based exclusively on the written record in the Office. See 37 C.F.R. § 1.2. As such, Petitioner is reminded that no telephone discussion may be controlling or considered authority for Petitioner's further action(s).

UNITED STATES PATENT AND TRADEMARK OFFICE

COMMISSIONER FOR PATENTS
UNITED STATES PATENT AND TRADEMARK OFFICE
P.O. BOX 1450
ALEXANDRIA, VA 22313-1450
WWW.USPTO.GOV

Paper No. None

Michael I. Kroll
171 Stillwell Lane
Syosset NY 11791

COPY MAILED

JUN 16 2006

OFFICE OF PETITIONS

In re Application of
Daniel Chen
Application No. 10/812,195
Filed: March 29, 2004
Attorney Docket Number: DC-2-AM
Title: OPTICAL LENS DRILL PRESS

DECISION ON PETITION
UNDER 37 C.F.R. §1.137(b)

This is a decision on the petition, pursuant to 37 C.F.R. §1.137(b)[1], to revive the above-identified application, filed on March 13, 2006.

The above-identified application became abandoned for failure to submit the issue and publication fees in a timely manner in reply to the Notice of Allowance and Issue Fee Due, mailed July 25, 2005, which set a shortened statutory period for reply of three (3) months. No extensions of time are permitted for transmitting issue or publication fees[2]. Accordingly, the above-identified application became abandoned on October 26, 2005. A notice of abandonment was mailed on December 14, 2005.

---

1 A grantable petition pursuant to 37 C.F.R. 1.137(b) must be accompanied by:
(1) The reply required to the outstanding Office action or notice, unless previously filed;
(2) The petition fee as set forth in § 1.17(m);
(3) A statement that the entire delay in filing the required reply from the due date for the reply until the filing of a grantable petition pursuant to this paragraph was unintentional. The Commissioner may require additional information where there is a question whether the delay was unintentional, and;
(4) Any terminal disclaimer (and fee as set forth in § 1.20(d)) required pursuant to paragraph (d) of this section.

2 See MPEP §710.02(e).

With the present petition, Petitioner has submitted the petition fee, the publication fee, the issue fee, and the proper statement of unintentional delay.

As such, the petition is **GRANTED**.

After the mailing of this decision, the Office of Patent Publications will be notified of the same so that the present application can be processed into a patent.

The phone number for the Office of Patent Publication is (571) 272-4200. Telephone inquiries regarding this decision should be directed to the undersigned at (571) 272-3225.

Paul Shanoski

Paul Shanoski
Senior Attorney
Office of Petitions
United States Patent and Trademark Office

UNITED STATES PATENT AND TRADEMARK OFFICE

Commissioner for Patents
United States Patent and Trademark Office
P.O. Box 1450
Alexandria, VA 22313-1450
www.uspto.gov

HEWLETT PACKARD COMPANY
P. O. BOX 272400, 3404 E. HARMONY ROAD
INTELLECTUAL PROPERTY ADMINISTRATION
FORT COLLINS, CO 80527-2400

COPY MAILED

AUG 22 2008

In re Application of	:	
Don R. James, Jr et al.	:	
Application No. 10/812,220	:	DECISION ON PETITION
Filed: March 29, 2004	:	
Attorney Docket No. 200313892-1	:	

This is a decision on the petition under the unintentional provisions of 37 CFR 1.137(b), filed May 30, 2008, to revive the above-identified application.

The petition is **GRANTED**.

This application became abandoned for failure to timely file a reply within the meaning of 37 CFR 1.113 to the final Office action of October 31, 2007. The proposed reply required for consideration of a petition to revive must be a Notice of Appeal (and appeal fee required by 37 CFR 41.20(b)(2)), an amendment that *prima facie* places the application in condition for allowance, a Request for Continued Examination (RCE) and submission (37 CFR 1.114), or the filing of a continuing application under 37 CFR 1.53(b). See MPEP 711.03(c)(III)(A)(2). A one month extension of time pursuant to the provisions of 37 CFR 1.136(a) was obtained. Accordingly, the date of abandonment of this application is March 1, 2008.

There is no indication that the person signing the petition was ever given a power of attorney or authorization of agent to prosecute the above-identified application. However, in accordance with 37CFR 1.34(a), the signature of Scott Lund appearing on the petition shall constitute a representation to the United States Patent and Trademark Office that he is authorized to represent the particular party in whose behalf he acts. If petitioner desires to receive future correspondence regarding this application, the appropriate power of attorney or authorization of agent must be submitted

It is not apparent whether the statement of unintentional delay was signed by a person who would have been in a position of knowing that the entire delay in filing the required reply from the due date for the reply until the filing of a grantable petition pursuant to 37 CFR 1.137(b) was unintentional. Nevertheless, in accordance with 37 CFR 10.18, the statement is accepted as constituting a certification of unintentional delay. However, in the event that petitioner has no knowledge that the delay was unintentional, petitioner must make such an inquiry to ascertain that, in fact, the delay was unintentional. If petitioner discovers that the delay was intentional, petitioner must so notify the Office.

As authorized, $1540 for the payment of the Petition to Revive Unintentionally Abandoned Application and $810 for a Request for Continued Examination (RCE) will be charged to petitioner's deposit account.

The petition satisfies the requirements of 37 CFR 1.137(b) in that petitioner has supplied (1) the reply in the form of a Request for Continued Examination (RCE) and fee of $810, and the submission required by 37 CFR 1.114; (2) the petition fee of $1540; and (3) a proper statement of unintentional delay.

Telephone inquiries concerning this decision should be directed to Denise Williams at (571) 272-8930.

This application is being referred to Technology Center AU 2191 for appropriate action by the Examiner in the normal course of business on the reply received.

Andrea Smith
Petitions Examiner
Office of Petitions

UNITED STATES PATENT AND TRADEMARK OFFICE

Commissioner for Patents
United States Patent and Trademark Office
P.O. Box 1450
Alexandria, VA 22313-1450
www.uspto.gov

MAILED

MAY 06 2009

OFFICE OF PETITIONS

DAVID E. LOVEJOY, REG. NO. 22,748
102 REED RANCH ROAD
TIBURON, CA 94920-2025

In re Application of Robert Eugene Stoddard, et al. Application No. 10/812,227 Filed: March 29, 2004 Attorney Docket No. AERO-01002US0	: : : : :	ON PETITION

This is a decision in response to the petition, filed March 10, 2009, to revive the above-identified application under the provisions of 37 CFR 1.137(b).

The petition is **GRANTED**.

The application became abandoned for failure to reply in a timely manner to the non-final Office action mailed September 3, 2008, which set a shortened statutory period for reply of three (3) months. No extension of time under the provisions of 37 CFR 1.136(a) was obtained. Accordingly, the application became abandoned on December 4, 2008. This decision precedes the mailing of a Notice of Abandonment.

The petition satisfies the conditions for revival pursuant to the provisions of 37 CFR 1.137(b) in that petitioner has supplied (1) a proposed reply in the form of an amendment; (2) the petition fee of $1,620; and (3) an adequate statement of unintentional delay.

The application is being referred to Technology Center AU 2618 for appropriate action by the Examiner in the normal course of business on the response filed March 10, 2009.

Telephone inquiries concerning this decision should be directed to the undersigned at (571) 272-3204. Inquiries relating to further prosecution should be directed to the Technology Center.

Sherry D. Brinkley
Petitions Examiner
Office of Petitions

UNITED STATES PATENT AND TRADEMARK OFFICE

Commissioner for Patents
United States Patent and Trademark Office
P.O. Box 1450
Alexandria, VA 22313-1450
www.uspto.gov

Woodcock Washburn LLP
Cira Centre, 12th Floor
2929 Arch Street
Philadelphia, PA 19104-2891

COPY MAILED

FEB 14 2008

OFFICE OF PETITIONS

In re Application of	:	
Mark James Batchelor et al.	:	
Application No. 10/812,293	:	DECISION ON PETITION
Filed: March 29, 2004	:	TO WITHDRAW
Attorney Docket No. CELL-0281	:	FROM RECORD
	:	

This is a decision on the Request to Withdraw as attorney or agent of record under 37 C.F.R. § 1.36(b), filed October 1, 2007.

The request is **NOT APPROVED**.

A grantable request to withdraw as attorney/agent of record must be signed by every attorney/agent seeking to withdraw or contain a clear indication that one attorney is signing on behalf of another/others. A request to withdraw will not be approved unless at least 30 (thirty) days would remain between the date of approval and the later of the expiration date of a time to file a response or the expiration date of the maximum time period which can be extended under 37 C.F.R. § 1.136(a).

The Office cannot approve the request at this time since the reasons provided do not meet any of the conditions under the mandatory or permissive categories enumerated in 37 CFR 10.40. Section 10.40 of Title 37 of the Code of Federal Regulation states, "[a] practitioner shall not withdraw from employment in a proceeding before the Office without permission from the Office[.]" More specifically, 37 CFR 10.40 states, "[i]f paragraph (b) of this section is not applicable, a practitioner may not request permission to withdraw in matter pending before the Office unless such request or such withdrawal is" for one the permissive reasons listed in 37 CFR 10.40(c). The reasons set forth in the request, ***Woodcock Washburn no longer represents this client***, do not meet any the conditions set forth in 37 CFR 10.40.

All future communications from the Office will continue to be directed to the above-listed address until otherwise notified by applicant.

Telephone inquiries concerning this decision should be directed to Terri Williams at 571-272- 2991.

T. Williams

Terri Williams
Petitions Examiner
Office of Petitions

cc: **Michael S. Greenfield**
McDonnell Boehnen Hulbert & Berghoff LLP
300 S. Wacker Drive
Chicago, IL 60606

UNITED STATES PATENT AND TRADEMARK OFFICE

UNITED STATES DEPARTMENT OF COMMERCE
United States Patent and Trademark Office
Address: COMMISSIONER FOR PATENTS
P.O. Box 1450
Alexandria, Virginia 22313-1450
www.uspto.gov

SPRINT COMMUNICATIONS COMPANY L.P.
6391 SPRINT PARKWAY
KSOPHT0101-Z2100
OVERLAND PARK, KS 66251-2100

Mail Date: 04/21/2010

Applicant	: John C. Stark	: DECISION ON REQUEST FOR
Patent Number	: 7647612	: RECALCULATION of PATENT
Issue Date	: 01/12/2010	: TERM ADJUSTMENT IN VIEW
Appliction No	: 10/812,299	: OF WYETH AND NOTICE OF INTENT TO
Filed	: 03/29/2004	: ISSUE CERTIFICATE OF CORRECTION
		:

The Request for Recalculation is **GRANTED** to the extent indicated.

The patent term adjustment has been determined to be **1328** days. The USPTO will *sua sponte* issue a certificate of correction reflecting the amount of PTA days determined by the recalculation.

Prior to the issuance of the certificate of correction, the USPTO will afford patentee an opportunity to be heard and request reconsideration. Accordingly, patentee has **one month or thirty (30) days**, whichever is longer, to file a request for reconsideration of this patent term adjustment calculation. See 35 U.S.C. 154(b)(3)(B)(ii) and 37 CFR 1.322(a)(4). No extensions of time will be granted under 37 CFR 1.136.

Patentee should use document code PET.OP if electronically filing a request for reconsideration of this patent term adjustment calculation. The patentee must also include the information required by 37 CFR 1.705(b)(2) and the fee required by 37 CFR 1.18(e). If patentee does not file a timely request for reconsideration of this patent term adjustment calculation including the information required by 37 CFR 1.705(b)(2) and the fee required by 37 CFR 1.18(e), the USPTO will issue a certificate of correction reflecting the PTA determination noted above.

Patentee should be aware that in order to preserve the right to review in the United States District Court for the District of Columbia of the USPTO patent term adjustment determination, patentee must ensure that he or she also take the steps required under 35 U.S.C. 154(b)(4)(A) in a timely manner. Nothing in the request for recalculation should be construed as providing an alternative time frame for commencing a civil action under 35 U.S.C. 154(b)(4)(A).

Any questions concerning this decision should be directed to the Office of Patent Legal Administration at 571-272-7702.

UNITED STATES PATENT AND TRADEMARK OFFICE

Commissioner for Patents
United States Patent and Trademark Office
P.O. Box 1450
Alexandria, VA 22313-1450
www.uspto.gov

CHRISTIE, PARKER & HALE, LLP
PO BOX 7068
PASADENA, CA 91109-7068

COPY MAILED

JUN 2 4 2004

OFFICE OF PETITIONS

In re Application of
Dong Tack Suh
Application No. 10/812,342
Filed: March 29, 2004
For: PULL PIN ASSEMBLY FOR CANOPY

DECISION GRANTING PETITION
UNDER 37 CFR 1.47(b)

This is in response to the "Petition Under 37 CFR 1.47(b)," filed March 29, 2004.

The petition is granted.

Petitioner has shown that the non-signing inventor has refused to join in the filing of the above-identified application after having been presented with the application papers. Specifically, the declarations of Stephen Burbach and Jun-Young Jeon establish that the inventor was mailed the application papers, including the specification, claims and drawings, but refused the request that he sign the declaration. In addition, petitioner has shown that Caravan Canopy International has a proprietary interest in the above-identified application with the assignment document. The petition fee has will be charged to petitioner's deposit account no. 03-1728. Lastly, petitioner has submitted a declaration in compliance with 37 CFR 1.63 and 1.64 and demonstrated that petitioner has shown that such action is necessary to prevent irreparable damage.

This application and papers have been reviewed and found in compliance with 37 CFR 1.47(b). This application is hereby accorded Rule 1.47(b) status.

As provided in Rule 1.47(b), this Office will forward notice of this application's filing to the non-signing inventor at the address given in the Declaration. Notice of the filing of this application will also be published in the Official Gazette.

The application will be forwarded to the Office of Initial Patent Examination for further processing.

Telephone inquiries regarding this communication should be directed to the undersigned at (703)306-9200

Edward J. Tannouse
Petitions Attorney
Office of Petitions
United States Patent and Trademark Office

UNITED STATES PATENT AND TRADEMARK OFFICE

Commissioner for Patents
United States Patent and Trademark Office
P.O. Box 1450
Alexandria, VA 22313-1450
www.uspto.gov

DONG TACK SUH
#731 SEONGKOK-DONG, SEONGDONG MAEUL,
LG VILLAGE 604-702
YONG-IN CITY, KYUNGGI-DO
KOREA

COPY MAILED

JUN 2 4 2004

OFFICE OF PETITIONS

In re Application of
Dong Tack Suh
Application No. 10/812,342
Filed: March 29, 2004
For: PULL PIN ASSEMBLY FOR CANOPY

Dear DONG TACK SUH:

You are named as the sole inventor in the above identified United States patent application, filed under the provisions of 35 U.S.C. 118 (United States Code), and 37 CFR 1.47(b), Rules of Practice in Patent Cases. Should a patent be granted on the application you will be designated therein as the sole inventor.

As a named inventor you are entitled to inspect any paper in the file wrapper of the application, order copies of all or any part thereof (at a prepaid cost per 37 CFR 1.19) or make your position of record in the application. Alternatively, you may arrange to do any of the preceding through a registered patent attorney or agent presenting written authorization from you. If you care to join the application, counsel of record (see below) would presumably assist you. Joining in the application would entail the filing of an appropriate oath or declaration by you pursuant to 37 CFR 1.63.

Telephone inquiries regarding this communication should be directed to the undersigned at (703)306-9200. Requests for information regarding your application should be directed to the File Information Unit at (703)308-2733. Information regarding how to pay for and order a copy of the application, or a specific paper in the application, should be directed to Certification Division at (703)308-9726 or 1(800)972-6382 (outside the Washington D.C. area).

Edward J. Tannouse
Petitions Attorney
Office of Petitions
United States Patent and Trademark Office

CHRISTIE, PARKER & HALE, LLP
PO BOX 7068
PASADENA, CA 91109-7068

UNITED STATES PATENT AND TRADEMARK OFFICE

Commissioner for Patents
United States Patent and Trademark Office
P.O. Box 1450
Alexandria, VA 22313-1450
www.uspto.gov

CHRISTIE, PARKER & HALE, LLP
PO BOX 7068
PASADENA CA 91109-7068

COPY MAILED

AUG 1 5 2008

OFFICE OF PETITIONS

In re Application of :
Dong Tack Suh :
Application No. 10/812,342 : ON PETITION
Filed: March 29, 2004 :
Attorney Docket No. **51278/RAH/C1015** :

This is a decision on the petition under 37 CFR 1.137(b)[1], filed November 5, 2007, to revive the above-identified application.

The petition is **GRANTED**.

This application became abandoned for failure to timely reply to the Final Office Action mailed May 4, 2006. A response was filed June 29, 2006, but by Advisory Action of August 19, 2006, petitioner was advised that the response did not place the application in condition for allowance. A second response was filed September 19, 2006 (certificate of mail date September 14, 2006) with a one month extension of time request. The request only extended the time for response to September 4, 2006, therefore since the response was filed September 19, 2006, the application became abandoned. Accordingly, a Notice of Abandonment was mailed September 6, 2006.

Petitioner has submitted a Request for Continued Examination (RCE) with the instant petition and a supplemental amendment on January 7, 2008 as the submission required under 37 CFR 1.114.

Additionally, a review of the record reveals that a two month extension of time was filed with the instant petition, however, pursuant to 37 CFR 1.136, an extension of time must be filed prior to the expiration of the maximum period obtainable for reply to avoid abandonment. Accordingly, since the $465.00 extension of time fee submitted with the petition on November 5, 2006, was subsequent to the maximum period obtainable for reply, this fee is unnecessary and will be credited to counsel's deposit account no. 03-1728.

---

[1]Effective December 1, 1997, the provisions of 37 CFR 1.137(b) now provide that where the delay in reply was unintentional, a petition may be filed to revive an abandoned application or a lapsed patent pursuant to 37 CFR 1.137(b). A grantable petition filed under the provisions of 37 CFR 1.137(b) must be accompanied by:

(1) the required reply, unless previously filed. In a nonprovisional application abandoned for failure to prosecute, the required reply may be met by the filing of a continuing application. In an application or patent, abandoned or lapsed for failure to pay the issue fee or any portion thereof, the required reply must be the payment of the issue fee or any outstanding balance thereof.

(2) the petition fee as set forth in 37 CFR 1.17(m);

(3) a statement that the entire delay in filing the required reply from the due date for the reply until the filing of a grantable petition pursuant to 37 CFR 1.137(b) was unintentional. The Commissioner may required additional information where there is a question whether the delay was unintentional; and

(4) any terminal disclaimer (and fee as set forth in 37 CFR 1.20(d)) required pursuant to 37 CFR 1.137(c)).

This matter is being referred to Technology Center 3679 for processing of the RCE.

Telephone inquiries related to this decision should be directed to the undersigned Petitions Attorney at (571) 272-3212.

Patricia Faison-Ball

Patricia Faison-Ball
Senior Petitions Attorney
Office of Petitions

UNITED STATES PATENT AND TRADEMARK OFFICE

Commissioner for Patents
United States Patent and Trademark Office
P.O. Box 1450
Alexandria, VA 22313-1450
www.uspto.gov

CHRISTIE, PARKER & HALE, LLP
PO BOX 7068
PASADENA CA 91109-7068

COPY MAILED

SEP 17 2008

OFFICE OF PETITIONS

In re Application of
Dong Tack Suh
Application No. 10/812,342
Filed: March 29, 2004
Attorney Docket No. **51278/RAH/C1015**

ON PETITION

This is a decision on the petition under 37 CFR 1.137(a)[1], filed November 5, 2007, to revive the above-identified application.

The petition is **DISMISSED**.
Any request for reconsideration of this decision must be submitted within TWO (2) MONTHS from the mail date of this decision. Extensions of time under 37 CFR 1.136(a) are permitted. The reconsideration request should include a cover letter entitled "Renewed Petition under 37 CFR 1.137(a)". This is **not** final agency action within the meaning of 5 U.S.C. § 704.

This application became abandoned for failure to timely reply to the Final Office Action mailed May 4, 2006. A response was filed June 29, 2006, but by Advisory Action of August 19, 2006, petitioner was advised that the response did not place the application in condition for allowance. A second response was filed September 19, 2006 (certificate of mail date September 14, 2006) with a one month extension of time request. The request only extended the time for response to September 4, 2006, therefore since the response was filed September 19, 2006, the application became abandoned. Accordingly, a Notice of Abandonment was mailed September 6, 2006.

PETITION UNDER 37 CFR 1.137(a)
The Commissioner may revive an abandoned application if the delay in responding to

---

[1]Effective December 1, 1997, the provisions of 37 CFR 1.137(b) now provide that where the delay in reply was unintentional, a petition may be filed to revive an abandoned application or a lapsed patent pursuant to 37 CFR 1.137(b). A grantable petition filed under the provisions of 37 CFR 1.137(b) must be accompanied by:

(1) the required reply, unless previously filed. In a nonprovisional application abandoned for failure to prosecute, the required reply may be met by the filing of a continuing application. In an application or patent, abandoned or lapsed for failure to pay the issue fee or any portion thereof, the required reply must be the payment of the issue fee or any outstanding balance thereof.

(2) the petition fee as set forth in 37 CFR 1.17(m);

(3) a statement that the entire delay in filing the required reply from the due date for the reply until the filing of a grantable petition pursuant to 37 CFR 1.137(b) was unintentional. The Commissioner may required additional information where there is a question whether the delay was unintentional; and

(4) any terminal disclaimer (and fee as set forth in 37 CFR 1.20(d)) required pursuant to 37 CFR 1.137(c)).

the relevant outstanding Office requirement is shown to the satisfaction of the Commissioner to be "unavoidable".[2] Decisions on reviving abandoned applications on the basis of "unavoidable" delay have adopted the reasonably prudent person standard in determining if the delay was unavoidable:

> The word 'unavoidable' . . . is applicable to ordinary human affairs, and requires no more or greater care or diligence than is generally used and observed by prudent and careful men in relation to their most important business. It permits them in the exercise of this care to rely upon the ordinary and trustworthy agencies of mail and telegraph, worthy and reliable employees, and such other means and instrumentalities as are usually employed in such important business. If unexpectedly, or through the unforeseen fault or imperfection of these agencies and instrumentalities, there occurs a failure, it may properly be said to be unavoidable, all other conditions of promptness in its rectification being present.[3]

The showing of record is inadequate to establish unavoidable delay within the meaning of 35 U.S.C. § 133 and 37 CFR 1.137(a).[4] Specifically, an application is "unavoidably" abandoned only where petitioner, or counsel for petitioner, takes all action necessary for a proper response to the outstanding Office action, but through the intervention of unforeseen circumstances, such as failure of mail, telegraph, facsimile, or the negligence of otherwise reliable employees, the response is not timely received in the Office.[5]

The petition notes that the petitioner confirmed with the Examiner over the telephone the status of the claims and therefore filed an amendment canceling the rejected claims and placing the allowable claims in allowable form. No other amendments were made. Petitioner further argues that since no amendments were made other than to cancel rejected claims and to place the objected claims in allowable form (as confirmed with the Examiner over the telephone, petitioner expected the amendment to be entered, and waited for a Notice of Allowance to be mailed.

---

[2]35 U.S.C. § 133.

[3]In re Mattullath, 38 App. D.C. 497, 514-15 (1912)(quoting Ex parte Pratt, 1887 Dec. Comm'r Pat. 31, 32-33 (1887)); see also Winkler v. Ladd, 221 F. Supp. 550, 552, 138 USPQ 666, 167-68 (D.D.C. 1963), aff'd, 143 USPQ 172 (D.C. Cir. 1963); Ex parte Henrich, 1913 Dec. Comm'r Pat. 139, 141 (1913). In addition, decisions on revival are made on a "case-by-case basis, taking all the facts and circumstances into account." Smith v. Mossinghoff, 671 F.2d 533, 538, 213 USPQ 977, 982 (D.C. Cir. 1982). Finally, a petition cannot be granted where a petitioner has failed to meet his or her burden of establishing that the delay was "unavoidable." Haines v. Quigg, 673 F. Supp. 314, 316-17, 5 USPQ2d 1130, 1131-32 (N.D. Ind. 1987).

[4]See MPEP 711(c)(III)(C)(2) for a discussion of the requirements for a showing of unavoidable delay.

[5]Ex parte Pratt, 1887 Dec. Comm'r Pat. 31 (Comm'r Pat. 1887).

Petitioner's arguments have been considered but are not persuasive.

It is the applicant's responsibility to take the necessary action in an application under a final Office action to provide a complete and proper reply. The fact that the examiner may or may not have entered an amendment in an application prior to the end of the period for reply does not relieve applicant of the responsibility to submit a complete and proper reply prior to the end of the statutory period for reply in order to avoid abandonment. Petitioner's failure to take any action in furtherance of the required reply by the due date is the cause of the delay which if Petitioner had been diligent in ensuring that the amendment was entered could have avoided the abandonment. Rather, the failure to act represents a showing of a lack of diligence on the part of the petitioner.

A delay resulting from the lack of knowledge or improper application of the patent statute, rules of practice or the MPEP does not constitute an "unavoidable"delay.[6] A delay caused by an applicant's lack of knowledge or improper application of the patent statute, rules of practice or the MPEP is not rendered "unavoidable" due to: (1) the applicant's reliance upon oral advice from Office employees; or (2) the Office's failure to advise the applicant of any deficiency in sufficient time to permit the applicant to take corrective action.[7]

In summary, the showing of record is that rather than unavoidable delay, the delay in filing a response to the Final Office Action was due to a lack of diligence on the part of petitioner in prosecution of the application. As petitioner has presented no showing of unavoidable delay, the petition will be dismissed.

As the present petition was filed and decided under both 37 CFR 1.137(a) and (b) petitioner's deposit account no. 03-1728 has been charged in the amount of $255.00 for treatment of the petition under 37 CFR 1.137(a)

Further correspondence with respect to this matter should be addressed as follows:

By mail: Mail Stop Petitions
Commissioner for Patents
P.O. Box 1450
Alexandria VA 22313-1450

---

[6]See Haines v. Quigg, 673 F. Supp. 314, 317, 5 USPQ2d 1130, 1132 (N.D. Ind. 1987), Vincent v. Mossinghoff, 230 USPQ 621, 624 (D.D.C. 1985); Smith v. Diamond, 209 USPQ 1091 (D.D.C. 1981); Potter v. Dann, 201 USPQ 574 (D.D.C. 1978); Ex parte Murray, 1891 Dec. Comm'r Pat. 130, 131 (1891).

[7]See In re Sivertz, 227 USPQ 255, 256 (Comm'r Pat. 1985); see also In re Colombo, Inc., 33 USPQ2d 1530, 1532 (Comm'r Pat. 1994)(while the Office attempts to notify applicants of deficiencies in their responses in a manner permitting a timely correction, the Office has no obligation to notify parties of deficiencies in their responses in a manner permitting a timely correction).

By FAX: (571) 273-8300
Attn: Office of Petitions

Telephone inquiries concerning this matter may be directed to the undersigned Petitions Attorney at (571) 272-3212.

Patricia Faison-Ball

Patricia Faison-Ball
Senior Petitions Attorney
Office of Petitions

UNITED STATES PATENT AND TRADEMARK OFFICE

Commissioner for Patents
United States Patent and Trademark Office
P.O. Box 1450
Alexandria, VA 22313-1450
www.uspto.gov

PATTERSON, THUENTE, SKAAR & CHRISTENSEN
4800 IDS CENTER
80 SOUTH 8TH STREET
MINNEAPOLIS MN 55402-2100

COPY MAILED

APR 27 2006

OFFICE OF PETITIONS

In re Application of	:	
Stephen D. Kuslich	:	
Application No. 10/812,345	:	ON PETITION
Filed: March 29, 2004	:	
Attorney Docket No. 3110.07US06	:	

This is a decision on the petition under 37 CFR 1.137(b), filed January 9, 2006, to revive the above-identified application.

The petition is **GRANTED**.

The above-identified application became abandoned for failure to submit the issue fee and publication fee in a timely manner in reply to the Notice of Allowance mailed September 9, 2005, which set a statutory period for reply of three (3) months. Accordingly, the above-identified application became abandoned on December 10, 2005.

Telephone inquiries concerning this decision should be directed to the undersigned at (571) 272-3208.

This matter is being referred to Patent Publication.

Karen Creasy

Karen Creasy
Petitions Examiner
Office of Petitions

UNITED STATES PATENT AND TRADEMARK OFFICE

Commissioner for Patents
United States Patent and Trademark Office
P.O. Box 1450
Alexandria, VA 22313-1450
www.uspto.gov

Nazir A Khan MD
150 Glenmora Drive
Burr Ridge IL 60527

MAILED

JUL 20 2009

OFFICE OF PETITIONS

In re Application of	:	
Iftikhar Khan, et al.	:	
Application No. 10/812,380	:	DECISION ON PETITION
Filed: March 29, 2004	:	TO MAKE SPECIAL UNDER
Attorney Docket No. 1800-000001	:	37 CFR 1.102(c)(1)
	:	

This is a decision on the petition under 37 CFR 1.102(c)(1), filed June 10, 2009, to make the above-identified application special based on applicant's age as set forth in M.P.E.P. § 708.02, Section IV.

The petition is **GRANTED**.

A grantable petition to make an application special under 37 CFR 1.102(c)(1) and MPEP § 708.02, Section IV: Applicant's Age, must be accompanied by evidence showing that at least one of the applicants is 65 years of age, or more, such as a birth certificate or a statement by applicant. No fee is required.

The instant petition includes a statement from the applicant, Nazir Ahmad Khan, declaring that he is 65 years of age or older. Accordingly, the above-identified application has been accorded "special" status.

Telephone inquiries concerning this decision should be directed to Terri Williams at 571-272-2991.

All other inquiries concerning either the examination or status of the application should be directed to the Technology Center.

The application is being forwarded to the Technology Center Art Unit 3761 for action on the merits commensurate with this decision.

Terri Williams

Terri Williams
Petitions Examiner
Office of Petitions

UNITED STATES PATENT AND TRADEMARK OFFICE

Commissioner for Patents
United States Patent and Trademark Office
P.O. Box 1450
Alexandria, VA 22313-1450
www.uspto.gov

COPY MAILED

JUL 23 2007

OFFICE OF PETITIONS

MORRISON & FOERSTER LLP
1650 TYSONS BOULEVARD
SUITE 400
MCLEAN VA 22102

In re Application of	:	
FOCKE, JURGEN	:	
Application No. 10/812,396	:	DECISION ON PETITION
Filed: March 30, 2004	:	TO WITHDRAW
Attorney Docket No. **449122069700**	:	FROM RECORD
	:	

This is a decision on the Request to Withdraw as attorney or agent of record under 37 C.F.R. § 1.36(b), filed May 25, 2007.

The request is **APPROVED**.

A grantable request to withdraw as attorney/agent of record must be signed by every attorney/agent seeking to withdraw or contain a clear indication that one attorney is signing on behalf of another/others. A request to withdraw will not be approved unless at least 30 (thirty) days would remain between the date of approval and the later of the expiration date of a time to file a response or the expiration date of the maximum time period which can be extended under 37 C.F.R. § 1.136(a).

The request was signed by Deborah S. Gladstein on behalf of all attorneys of record who are associated with customer No. 25227. All attorneys/agents associated have been withdrawn. Applicant is reminded that there is no attorney of record at this time.

The request to change the correspondence of record is not acceptable as the requested correspondence address is not that of: (1) the first named signing inventor; or (2) an intervening assignee of the entire interest under 37 C.F.R 3.71. All future communications from the Office will be directed to the first named signing inventor.

There are no outstanding office actions at this time.

Telephone inquiries concerning this decision should be directed to Michelle R. Eason at 571-272-4231.

TWilliams

Terri Williams
Petitions Examiner
Office of Petitions

cc: **JURGEN FOCKE**
LISSABONALLEE 11
BERLIN, GERMANY 14163

cc: **KEVIN SPIVAK**
BELL BOYD & LLOYD
70 WEST MADISON STREET
SUITE 3100
CHICAGO, ILLINOIS 60602-4207

UNITED STATES PATENT AND TRADEMARK OFFICE

Commissioner for Patents
United States Patent and Trademark Office
P.O. Box 1450
Alexandria, VA 22313-1450
www.uspto.gov

Morrison & Foerster LLP
1650 Tysons Boulevard
Suite 400
McLean, VA 22102

COPY MAILED

SEP 07 2007

OFFICE OF PETITIONS

In re Application of	:	
Steve Wang et al.	:	
Application No. 10/812,412	:	DECISION ON PETITION
Filed: March 30, 2004	:	TO WITHDRAW
Attorney Docket No. 543822005300	:	FROM RECORD
	:	

This is a decision on the Request to Withdraw as attorney or agent of record under 37 C.F.R. § 1.36(b), filed April 13, 2007.

The request is **NOT APPROVED** as moot.

A review of the file record indicates that the power of attorney to Morrison & Foerster LLP has been revoked by the assignee of the patent application on July 20, 2007. Accordingly, the request to withdraw under 37 C.F.R. § 1.36(b) is moot.

All future communications from the Office will continue to be directed to the below-listed address until otherwise notified by applicant.

Telephone inquires concerning this decision should be directed to Terri Williams at 571-272-2991.

T. Williams

Terri Williams
Petitions Examiner
Office of Petitions

cc: **Eschweiler & Associates LLC**
National City Bank Building
Cleveland, OH 44114

UNITED STATES PATENT AND TRADEMARK OFFICE

COMMISSIONER FOR PATENTS
UNITED STATES PATENT AND TRADEMARK OFFICE
P.O. BOX 1450
ALEXANDRIA, VA 22313-1450
www.uspto.gov

FISH & RICHARDSON P.C.
PO BOX 1022
MINNEAPOLIS MN 55440-1022

MAILED

FEB 24 2010

OFFICE OF PETITIONS

In re Patent No. 7,533,090	:	DECISION ON REQUEST FOR
AGARWAL et al.	:	RECONSIDERATION OF
Issue Date: May 12, 2009	:	PATENT TERM ADJUSTMENT AND
Application No. 10/812,417	:	NOTICE OF INTENT TO ISSUE
Filed: March 30, 2004	:	CERTIFICATE OF CORRECTION
Docket No. 16113-641001	:	

This is a decision on the petition filed on July 9, 2009, which is being treated as a petition under 37 CFR 1.705(d) requesting that the patent term adjustment indicated on the above-identified patent be corrected to indicate that the term of the above-identified patent is extended or adjusted by six hundred three (603) days.

The petition to correct the patent term adjustment indicated on the above-identified patent is **GRANTED to the extent** that the term of the above-identified patent is extended or adjusted by six hundred two (602) days.

As the period from the filing date of the request for continued examination (RCE) to the issue date of the patent is not included in the "B" delay period, the over three year period begins on March 31, 2007, and ends on October 8, 2007, the day before the RCE was filed, and is 192 (not 193) days. See 35 U.S.C. 154(b)(1)(B)(i). As such, the patent term adjustment is 602, not 603 days.

The Office will *sua sponte* issue a certificate of correction. Pursuant to 37 CFR 1.322, the Office will not issue a certificate of correction without first providing assignee or

patentee an opportunity to be heard. Accordingly, patentee is given **one (1) month or thirty (30) days**, whichever is longer, from the mail date of this decision to respond. No extensions of time will be granted under § 1.136.

The Office acknowledges the submission of the $200.00 fee set forth in 37 CFR 1.18(e). No additional fees are required.

This matter is being referred to the Certificates of Branch for issuance of a certificate of correction. The Office will issue a certificate of correction indicating that the term of the above-identified patent is extended or adjusted by **six hundred two (602) days.**

Telephone inquiries specific to this matter should be directed to the undersigned at (571) 272-3211.

Christina Tartera Donnell

Christina Tartera Donnell
Senior Petitions Attorney
Office of Petitions

Enclosure: Copy of DRAFT Certificate of Correction

UNITED STATES PATENT AND TRADEMARK OFFICE

CERTIFICATE OF CORRECTION

PATENT : 7,533,090 B2

DATED : May 12, 2009 **DRAFT**

INVENTOR(S) : Agarwal et al.

It is certified that error appears in the above-identified patent and that said Letters Patent is hereby corrected as shown below:

On the cover page,

[*] Notice: Subject to any disclaimer, the term of this patent is extended or adjusted under 35 USC 154(b) by 410 days

Delete the phrase "by 410 days" and insert – by 602 days--

DATE 5/25/05 APPLICATION NUMBER 10/812426

DOC CODE PET.DEC.OIPE DOC DATE

DELIVER THE ATTACHED FIFLE/DOCUMENT TO THE TC SCANNING CENTER

CONTRACTOR: THE ATTACHED FILE/DOCUMENT MUST BE INDEXED AND SCANNED INTO IFW WITHIN **8** WORK HOURS; UPLOADING OF THE SCANNED IMAGES SHOULD OCCUR NO LATER THAN **16** WORK HOURS FOLLOWING RECEIPT OF THIS REQUEST

AFTER SCANNING, ORIGINAL DOCUMENTS SHOULD BE BOXED IN ACCORDANCE WITH INSTRUCTIONS

UNITED STATES PATENT AND TRADEMARK OFFICE

Commissioner for Patents
United States Patent and Trademark Office
P.O. Box 1450
Alexandria, VA 22313-1450
www.uspto.gov

COPY MAILED

MAY 2 6 2005

OFFICE OF PETITIONS

PHILIP S. JOHNSON
JOHNSON & JOHNSON
ONE JOHNSON & JOHNSON PLAZA
NEW BRUNSWICK, NJ 08933-7003

In re Application of :
Tony A. Cutshall, et al. :
Application No. 10/812,426 : ON PETITION
Filed: March 30, 2004 :
Attorney Docket No. DEP-5069 :

This is a decision on the petition under 37 CFR 1.137(b), filed February 18, 2005, to revive the above-identified application.

The petition is **GRANTED**.

The application became abandoned for failure to timely respond to a Notice to File Corrected Application Papers mailed June 15, 2004. This decision precedes the mailing of a Notice of Abandonment. On February 18, 2005, the present petition was filed, along with replacement drawings and a petition for extension of time.

Extensions of time under 37 CFR 1.136 are available only if asked for prior to or with the response. In no case, however, may an applicant respond later than the maximum time period set by statute. Accordingly, if the question of abandonment arises when the provisions of 37 CFR 1.136 can no longer be used, then the application is abandoned when the unextended time for response has expired. Since, no extension of time fees are due on a petition for revival, the $2160 extension fees are being credited to counsel's deposit account.

The application is being referred to the Office of Initial Patent Examination (OIPE) for further consideration of the replacement drawings filed February 18, 2005.

Telephone inquires related to this decision should be directed to the undersigned at (571) 272-3204. Telephone inquiries related to OIPE processing should be directed to their hotline at (703) 308-1202.

Sherry D. Brinkley
Petitions Examiner
Office of Petitions
Office of the Deputy Commissioner
for Patent Examination Policy

UNITED STATES PATENT AND TRADEMARK OFFICE

COMMISSIONER FOR PATENTS
UNITED STATES PATENT AND TRADEMARK OFFICE
P.O. BOX 1450
ALEXANDRIA, VA 22313-1450
www.uspto.gov

EMC CORPORATION
OFFICE OF THE GENERAL COUNSEL
176 SOUTH STREET
HOPKINTON, MA 01748

COPY MAILED

JAN 25 2005

OFFICE OF PETITIONS

In re Application of :
Michael A, Faulkner, et al. :
Application No. 10/812,429 : DECISION GRANTING PETITION
Filed: March 30, 2004 :
Attorney Docket No. EMC-04-008 :

This is a decision on the petition styled "Petition to Correct Official Filing Receipt" filed November 1, 2004, requesting that the above-identified application be accorded a filing date of March 30, 2004, instead of the presently accorded date of March 31, 2004.

Applicants request the earlier filing date on the basis that the application was purportedly deposited with the U. S. Postal Service (USPS) as Express Mail on March 30, 2004. In support, applicants provide, inter alia, a copy of the Express Mail label, No. EK900599147US and a copy of the USPS Track/Confirm record. The same Express Mail receipt number appears on the application papers found in the file. It is noted that while the "date-in" entered on the present copy of the Express Mail mailing label is not clear, the copy of the USPS Track/Confirm record clearly shows that the package bearing Express Mail label No. EK900599147US was accepted on March 30, 2004 at the USPS in HOPKINTON, MA 01748 at 4:46pm.

In view of the above, the evidence is convincing that the application was deposited as "Express Mail" with the U.S. Postal Service on March 30, 2004.

The petition is GRANTED.

The application is being referred to Initial Patent Examination Division for correction of the filing date to **March 30, 2004**, and issuance of a Corrected Official Filing Receipt.

Telephone inquires related to this decision should be directed to the undersigned at (571) 272-3204. Telephone inquiries related to OIPE processing should be directed to their hotline at (703) 308-1202.

Sherry D. Brinkley
Petitions Examiner
Office of Petitions
Office of the Deputy Commissioner
for Patent Examination Policy

UNITED STATES PATENT AND TRADEMARK OFFICE

UNITED STATES DEPARTMENT OF COMMERCE
United States Patent and Trademark Office
Address: COMMISSIONER FOR PATENTS
P.O. Box 1450
Alexandria, Virginia 22313-1450
www.uspto.gov

ALSTON & BIRD LLP
BANK OF AMERICA PLAZA
101 SOUTH TRYON STREET, SUITE 4000
CHARLOTTE, NC 28280-4000

Mail Date: 04/21/2010

Applicant	: Bruce Ahrens	: DECISION ON REQUEST FOR
Patent Number	: 7571111	: RECALCULATION of PATENT
Issue Date	: 08/04/2009	: TERM ADJUSTMENT IN VIEW
Appliction No	: 10/812,484	: OF WYETH AND NOTICE OF INTENT TO
Filed	: 03/29/2004	: ISSUE CERTIFICATE OF CORRECTION
		:

The Request for Recalculation is **GRANTED** to the extent indicated.

The patent term adjustment has been determined to be **924** days. The USPTO will *sua sponte* issue a certificate of correction reflecting the amount of PTA days determined by the recalculation.

Prior to the issuance of the certificate of correction, the USPTO will afford patentee an opportunity to be heard and request reconsideration. Accordingly, patentee has **one month or thirty (30) days**, whichever is longer, to file a request for reconsideration of this patent term adjustment calculation. See 35 U.S.C. 154(b)(3)(B)(ii) and 37 CFR 1.322(a)(4). No extensions of time will be granted under 37 CFR 1.136.

Patentee should use document code PET.OP if electronically filing a request for reconsideration of this patent term adjustment calculation. The patentee must also include the information required by 37 CFR 1.705(b)(2) and the fee required by 37 CFR 1.18(e). If patentee does not file a timely request for reconsideration of this patent term adjustment calculation including the information required by 37 CFR 1.705(b)(2) and the fee required by 37 CFR 1.18(e), the USPTO will issue a certificate of correction reflecting the PTA determination noted above.

Patentee should be aware that in order to preserve the right to review in the United States District Court for the District of Columbia of the USPTO patent term adjustment determination, patentee must ensure that he or she also take the steps required under 35 U.S.C. 154(b)(4)(A) in a timely manner. Nothing in the request for recalculation should be construed as providing an alternative time frame for commencing a civil action under 35 U.S.C. 154(b)(4)(A).

Any questions concerning this decision should be directed to the Office of Patent Legal Administration at 571-272-7702.

UNITED STATES PATENT AND TRADEMARK OFFICE

Commissioner for Patents
United States Patent and Trademark Office
P.O. Box 1450
Alexandria, VA 22313-1450
www.uspto.gov

HEWLETT PACKARD COMPANY
P.O. BOX 272400, 3404 E. HARMONY ROAD
INTELLECTUAL PROPERTY ADMINISTRATION
FORT COLLINS, CO 80527-2400

COPY MAILED

MAR 3 1 2008

OFFICE OF PETITIONS

In re Application of	:	
Alan M. Green, et. al.	:	
Application No. 10/812,486	:	ON PETITION
Filed: March 30, 2004	:	
Attorney Docket No. 200314746-1	:	

This is a decision on the petition under 37 CFR 1.137(b), filed March 27, 2007, to revive the above-identified application.

The application became abandoned for failure to respond to the Notice of Drawing Inconsistency with Specification mailed February 15, 2007. A Notice of Abandonment was mailed on July 13, 2007.

It is not apparent whether the person signing the instant petition was ever given a power of attorney or authorization of agent to prosecute the above-identified application. However, in accordance with 37 CFR 1.34(a), the signature of L. Jon Lindsay shall constitute a representation to the United States Patent and Trademark Office that he/she is authorized to represent the particular party in whose behalf he/she acts.

The petition satisfies the requirements of 37 CFR 1.137(b), in that, petitioner has supplied (1) the reply in the form of a replacement specification; (2) the petition fee of $1,500; and (3) a proper statement of unintentional delay. Therefore, the petition is **GRANTED**.

This application file is being referred to the Office of Data Management for further processing into a patent.

Telephone inquiries concerning this decision should be directed to the undersigned at (571) 272-3226.

Andrea Smith
Petitions Examiner
Office of Petitions

UNITED STATES PATENT AND TRADEMARK OFFICE

UNITED STATES DEPARTMENT OF COMMERCE
United States Patent and Trademark Office
Address: COMMISSIONER FOR PATENTS
P.O. Box 1450
Alexandria, Virginia 22313-1450
www.uspto.gov

APPL NO.	FILING OR 371 (c) DATE	ART UNIT	FIL FEE REC'D	ATTY.DOCKET NO	DRAWINGS	TOT CLMS	IND CLMS
10/812,490	03/30/2004	2115	1230	EMC-04-010	2	36	5

CONFIRMATION NO. 3257

CORRECTED FILING RECEIPT

OC000000014336796

EMC Corporation
Office of the General Counsel
176 South Street
Hopkinton, MA 01748

Date Mailed: 11/10/2004

Receipt is acknowledged of this regular Patent Application. It will be considered in its order and you will be notified as to the results of the examination. Be sure to provide the U.S. APPLICATION NUMBER, FILING DATE, NAME OF APPLICANT, and TITLE OF INVENTION when inquiring about this application. Fees transmitted by check or draft are subject to collection. Please verify the accuracy of the data presented on this receipt. **If an error is noted on this Filing Receipt, please write to the Office of Initial Patent Examination's Filing Receipt Corrections, facsimile number 703-746-9195. Please provide a copy of this Filing Receipt with the changes noted thereon. If you received a "Notice to File Missing Parts" for this application, please submit any corrections to this Filing Receipt with your reply to the Notice. When the USPTO processes the reply to the Notice, the USPTO will generate another Filing Receipt incorporating the requested corrections (if appropriate).**

Applicant(s)

Phillip J. Roux, Sutton, MA;
Michael A. Faulkner, Grafton, MA;
Paul H. Maier JR., Athol, MA;

Power of Attorney:

John Gunther–26175
William Clark–29523
Penelope S. Wilson–29751
Robert Kevin Perkins–36634
Krishnendu Gupta–37977
Scott Ouellette–38573
Leanne Fitzgerald–40606

Domestic Priority data as claimed by applicant

Foreign Applications

If Required, Foreign Filing License Granted: 06/10/2004

The country code and number of your priority application, to be used for filing abroad under the Paris Convention, is US10/812,490

Projected Publication Date: Request for Non-Publication Acknowledged

Non-Publication Request: Yes

Early Publication Request: No

Title

Method and system for providing redundant power to a disk drive system

Preliminary Class

713

LICENSE FOR FOREIGN FILING UNDER
Title 35, United States Code, Section 184
Title 37, Code of Federal Regulations, 5.11 & 5.15

GRANTED

The applicant has been granted a license under 35 U.S.C. 184, if the phrase "IF REQUIRED, FOREIGN FILING LICENSE GRANTED" followed by a date appears on this form. Such licenses are issued in all applications where the conditions for issuance of a license have been met, regardless of whether or not a license may be required as set forth in 37 CFR 5.15. The scope and limitations of this license are set forth in 37 CFR 5.15(a) unless an earlier license has been issued under 37 CFR 5.15(b). The license is subject to revocation upon written notification. The date indicated is the effective date of the license, unless an earlier license of similar scope has been granted under 37 CFR 5.13 or 5.14.

This license is to be retained by the licensee and may be used at any time on or after the effective date thereof unless it is revoked. This license is automatically transferred to any related applications(s) filed under 37 CFR 1.53(d). This license is not retroactive.

The grant of a license does not in any way lessen the responsibility of a licensee for the security of the subject matter as imposed by any Government contract or the provisions of existing laws relating to espionage and the national security or the export of technical data. Licensees should apprise themselves of current regulations especially with respect to certain countries, of other agencies, particularly the Office of Defense Trade Controls, Department of State (with respect to Arms, Munitions and Implements of War (22 CFR 121-128)); the Office of Export Administration, Department of Commerce (15 CFR 370.10 (j)); the Office of Foreign Assets Control, Department of Treasury (31 CFR Parts 500+) and the Department of Energy.

NOT GRANTED

No license under 35 U.S.C. 184 has been granted at this time, if the phrase "IF REQUIRED, FOREIGN FILING LICENSE GRANTED" DOES NOT appear on this form. Applicant may still petition for a license under 37 CFR 5.12, if a license is desired before the expiration of 6 months from the filing date of the application. If 6 months has lapsed from the filing date of this application and the licensee has not received any indication of a secrecy order under 35 U.S.C. 181, the licensee may foreign file the application pursuant to 37 CFR 5.15(b).

United States
Patent And
Trademark Office

P.O. Box 1450, Alexandria, Virginia 22313-1450 – www.uspto.gov

PETITION DECISION

05/11/04

Bromberg & Sunstein LLP
Barbara J. Carter
125 Summer Street
Boston MA 02110-1618

Dear Applicant:

The Box PG Pub replacement drawings for application number 10/812495 received on 04/27/04 by the U. S. Patent and Trademark Office will be included for patent publication.

Telephone inquiries should be directed to Kaletus King, Office of Pre-Grant Publication 703 605-4283.

Kaletus King

Signature of Reviewer, Office of Pre-Grant Publication

UNITED STATES PATENT AND TRADEMARK OFFICE

Commissioner for Patents
United States Patent and Trademark Office
P.O. Box 1450
Alexandria, VA 22313-1450
www.uspto.gov
DIW Apr-08

BARRY W. CHAPIN
CHAPIN INTELLECTUAL PROPERTY LAW, LLC
WESTBOROUGH OFFICE PARK
1700 WEST PARK DRIVE, SUITE 280
WESTBOROUGH MA 01581

COPY MAILED

APR 16 2008

In re Application of	:	
Yehuda et al.	:	DECISION ON PETITION
Application Number: 10/812511	:	
Filing Date: 03/30/2004	:	
Attorney Docket Number: EMC04-07(04031)	:	

This is a decision on the petition filed on March 18, 2008, under 37 CFR 1.137(b)[1] to revive the above-identified application.

The petition is **GRANTED**.

---

[1] Effective December 1, 1997, the provisions of 37 CFR 1.137(b) now provide that where the delay in reply was unintentional, a petition may be filed to revive an abandoned application or a lapsed patent pursuant to 37 CFR 1.137(b). A grantable petition filed under the provisions of 37 CFR 1.137(b) must be accompanied by:

(1) the required reply, unless previously filed. In a nonprovisional application abandoned for failure to prosecute, the required reply may be met by the filing of a continuing application. In a nonprovisional application filed on or after June 8, 1995, and abandoned for failure to prosecute, the required reply may also be met by the filing of a request for continued examination in compliance with § 1.114. In an application or patent, abandoned or lapsed for failure to pay the issue fee or any portion thereof, the required reply must be the payment of the issue fee or any outstanding balance thereof. In an application abandoned for failure to pay the publication fee, the required reply must include payment of the publication fee.

(2) the petition fee as set forth in 37 CFR 1.17(m);

(3) a statement that the entire delay in filing the required reply from the due date for the reply until the filing of a grantable petition pursuant to 37 CFR 1.137(b) was unintentional. The Director may required additional information where there is a question whether the delay was unintentional; and

(4) any terminal disclaimer (and fee as set forth in 37 CFR 1.20(d)) required pursuant to 37 CFR 1.137(d)).

This application became abandoned on March 15, 2008, for failure to timely submit the issue fee in response to the Notice of Allowance and Fee(s) Due mailed on December 14, 2007, which set a three (3) month statutory period for reply. Notice of Abandonment was mailed on March 26, 2008.

Receipt of the issue fee filed with the present petition is acknowledged.

The application is being referred to the Office of Data Management for processing into a patent.

Telephone inquiries concerning this matter may be directed to the undersigned at (571) 272-3231.

DWood

Douglas I. Wood
Senior Petitions Attorney
Office of Petitions

United States
Patent And
Trademark Office

P.O. Box 1450, Alexandria, Virginia 22313-1450 – www.uspto.gov

PETITION DECISION

05/11/04

Bromberg & Sunstein LLP
Barbara J. Carter
125 Summer Street
Boston MA 02110-1618

Dear Applicant:

The Box PG Pub replacement drawings for application number 10/812513 received on 04/27/04 by the U. S. Patent and Trademark Office will be included for patent publication.

Telephone inquiries should be directed to Kaletus King, Office of Pre-Grant Publication 703 605-4283.

Kaletus King

Signature of Reviewer, Office of Pre-Grant Publication

UNITED STATES PATENT AND TRADEMARK OFFICE

COMMISSIONER FOR PATENTS
UNITED STATES PATENT AND TRADEMARK OFFICE
P.O. BOX 1450
ALEXANDRIA, VA 22313-1450
www.uspto.gov

KATHY MANKE
AVAGO TECHNOLOGIES LIMITED
4380 ZIEGLER ROAD
FORT COLLINS CO 80525

COPY MAILED

AUG 15 2007

OFFICE OF PETITIONS

In re Application of	:	
Kong Weng Lee, et al.	:	
Application No. 10/812,526	:	DECISION ON PETITION
Filed: March 29, 2004	:	UNDER 37 CFR 1.78(a)(3)
Attorney Docket No. 70030845-1		

This is a decision on the petition under 37 CFR 1.78(a)(3), filed on March 29 2007, to accept an unintentionally delayed claim under 35 U.S.C. § 120 for the benefit of priority to the prior-filed nonprovisional application set forth in the amendment filed with the petition.

There is no indication that the petition is signed by a registered patent attorney or patent agent of record. However, in accordance with 37 CFR 1.34, the signature of Reginald A. Ratliff appearing on the correspondence shall constitute a representation to the United States Patent and Trademark Office that he is authorized to represent the particular party on whose behalf he acts. A courtesy copy of this decision is being mailed to Mr. Ratliff, however; if Mr. Ratliff desires to receive correspondence regarding this file, the appropriate power of attorney documents must be submitted. All future correspondence regarding this application file will be directed solely to the address of record.

The petition is **DISMISSED**.

A petition for acceptance of a claim for late priority under 37 CFR 1.78(a)(3) is only applicable to those applications filed on or after November 29, 2000. Further, the petition is appropriate only after the expiration of the period specified in 37 CFR 1.78(a)(2)(ii). In addition, the petition under 37 CFR 1.78(a)(3) must be accompanied by:

(1) the reference required by 35 U.S.C. § 120 and 37 CFR 1.78(a)(2)(i) and (iii) of the prior-filed application, unless previously submitted;
(2) the surcharge set forth in § 1.17(t); and
(3) a statement that the entire delay between the date the claim was due under 37 CFR 1.78(a)(2)(ii) and the date the claim was filed was

unintentional. The Director may require additional information where there is a question whether the delay was unintentional.

The petition does not satisfy items (1) and (2) above.

As to item (1) The reference to add the above-noted, prior-filed application on page one following the first sentence of the specification is not acceptable as drafted since it improperly incorporates by reference the prior-filed application. An incorporation by reference statement added after an application's filing date is not effective because no new matter can be added to an application after its filing date (*see* 35 U.S.C. § 132(a)). If an incorporation by reference statement is included in an amendment to the specification to add a benefit claim under 35 U.S.C. § 120 after the filing date of the application, the amendment would not be proper. When a benefit claim under 35 U.S.C. § 120 is submitted after the filing of an application, the reference to the prior application cannot include an incorporation by reference statement of the prior application. *See* Dart Industries v. Banner, 636 F.2d 684, 207 USPQ 273 (C.A.D.C. 1980). *Note* MPEP §§ 201.06(c) and 608.04(b).

As to item (2) Petitioner submitted authorization to charge the requisite surcharge to a deposit account; however, the deposit account identified in not active.

Before the petition under 37 CFR § 1.78(a)(3) can be granted, a renewed petition, the 1,370 surcharge, and either an Application Data Sheet or an amendment (complying with the provisions of 37 CFR 1.121 and 37 CFR 1.76(b)(5)) to correct the above matters are required.

Further correspondence with respect to this matter should be addressed as follows:

By mail: Mail Stop PETITIONS
Commissioner for Patents
Post Office Box 1450
Alexandria, VA 22313-1450

By hand: Customer Service Window
Mail Stop Petitions
Randolph Building
401 Dulany Street
Alexandria, VA 22314

By fax: (571) 273-8300
ATTN: Office of Petitions

Telephone inquiries concerning this decision should be directed to Sherry Brinkley at (571) 272-3204.

Sherry D. Brinkley
Petitions Examiner
Office of Petitions

cc: REGINALD A. RATLIFF
WAGNER, MURABITO & HAO LLP
TWO NORTH MARKET STREET
THIRD FLOOR
SAN JOSE, CA 95113

UNITED STATES PATENT AND TRADEMARK OFFICE

COMMISSIONER FOR PATENTS
UNITED STATES PATENT AND TRADEMARK OFFICE
P.O. BOX 1450
ALEXANDRIA, VA 22313-1450
www.uspto.gov

KATHY MANKE
AVAGO TECHNOLOGIES LIMITED
4380 ZIEGLER ROAD
FORT COLLINS CO 80525

COPY MAILED
OCT 25 2007
OFFICE OF PETITIONS

In re Application of
Kong Weng Lee, et al.
Application No. 10/812,526
Filed: March 29, 2004
Attorney Docket No. 70030845-1

DECISION ON PETITION
UNDER 37 CFR 1.78(a)(3)

This is a decision on the renewed petition under 37 CFR 1.78(a)(3), filed on September 10, 2007, to accept an unintentionally delayed claim under 35 U.S.C. § 120 for the benefit of priority to the prior-filed nonprovisional application set forth in the amendment filed with the petition.

There is no indication that the petition is signed by a registered patent attorney or patent agent of record. However, in accordance with 37 CFR 1.34, the signature of Nellie C. Kaufman appearing on the correspondence shall constitute a representation to the United States Patent and Trademark Office that she is authorized to represent the particular party on whose behalf she acts. A courtesy copy of this decision is being mailed to M. Kaufman, however; if Ms. Kaufman desires to receive correspondence regarding this file, the appropriate power of attorney documents must be submitted. All future correspondence regarding this application file will be directed solely to the address of record.

The petition is **GRANTED**.

A petition for acceptance of a claim for late priority under 37 CFR 1.78(a)(3) is only applicable to those applications filed on or after November 29, 2000. Further, the petition is appropriate only after the expiration of the period specified in 37 CFR 1.78(a)(2)(ii). In addition, the petition under 37 CFR 1.78(a)(3) must be accompanied by:

> (1) the reference required by 35 U.S.C. § 120 and 37 CFR 1.78(a)(2)(i) and (iii) of the prior-filed application(s), unless previously submitted;[1]

[1] Any nonprovisional application or international application designating the United States of America claiming the benefit of one or more prior-filed copending applications or international applications designating the United States of America must contain or be amended to contain a reference (amendment to the first line of the specification following the title or in an application data sheet (ADS) to each such prior-filed application, identifying it by application number (consisting of the series code and serial number) or international application number and international filing date filing date and indicating the relationship of the applications. Cross references to other related applications may be made when appropriate (*see* § 1.14).

(2) the surcharge set forth in § 1.17(t); and
(3) a statement that the entire delay between the date the claim was due under 37 CFR 1.78(a)(2)(ii) and the date the claim was filed was unintentional. The Director may require additional information where there is a question whether the delay was unintentional.

All of the above requirements having been satisfied, the late claim for priority under 35 U.S.C. § 120 is accepted as being unintentionally delayed.

The granting of the petition to accept the delayed benefit claim to the prior-filed application(s) under 37 CFR 1.78(a)(3) should not be construed as meaning that this application is entitled to the benefit of the prior-filed application(s). In order for this application to be entitled to the benefit of the prior-filed application(s), all other requirements under 35 U.S.C. § 120 and 37 CFR 1.78(a)(1) and (a)(2) must be met. Similarly, the fact that the corrected Filing Receipt accompanying this decision on petition includes the prior-filed application(s) should not be construed as meaning that applicant is entitled to the claim for benefit of priority to the prior-filed application(s) noted thereon. Accordingly, the examiner will, in due course, consider this benefit claim and determine whether the application is entitled to the benefit of the earlier filing date.

A corrected Filing Receipt, which includes the priority claim to the prior-filed nonprovisional application, accompanies this decision on petition.

Any inquiries concerning this decision may be directed to the undersigned at (571) 272-3204. All other inquiries concerning either the examination procedures or status of the application should be directed to the Technology Center.

This application is being forwarded to Technology Center Art Unit 2885 for consideration by the examiner of applicant's entitlement to claim benefit of priority under 35 U.S.C. § 120 to the prior-filed application.

Sherry D. Brinkley
Petitions Examiner
Office of Petitions

Attachment: Corrected Filing Receipt

cc: NELLIE KAUFMAN
KLAAS LAW O'MEARA AND MALKIN PC
1999 BROADWAY STE 2225
DENVER, CO 80202

UNITED STATES PATENT AND TRADEMARK OFFICE

UNITED STATES DEPARTMENT OF COMMERCE
United States Patent and Trademark Office
Address: COMMISSIONER FOR PATENTS
P.O. Box 1450
Alexandria, Virginia 22313-1450
www.uspto.gov

APPLICATION NUMBER	FILING or 371(c) DATE	GRP ART UNIT	FIL FEE REC'D	ATTY.DOCKET.NO	TOT CLAIMS	IND CLAIMS
10/812,526	03/29/2004	2885	770	70030845-1	19	2

CONFIRMATION NO. 3297

CORRECTED FILING RECEIPT

OC000000026387184

57299
Kathy Manke
Avago Technologies Limited
4380 Ziegler Road
Fort Collins, CO 80525

Date Mailed: 10/22/2007

Receipt is acknowledged of this non-provisional patent application. The application will be taken up for examination in due course. Applicant will be notified as to the results of the examination. Any correspondence concerning the application must include the following identification information: the U.S. APPLICATION NUMBER, FILING DATE, NAME OF APPLICANT, and TITLE OF INVENTION. Fees transmitted by check or draft are subject to collection. Please verify the accuracy of the data presented on this receipt. **If an error is noted on this Filing Receipt, please write to the Office of Initial Patent Examination's Filing Receipt Corrections. Please provide a copy of this Filing Receipt with the changes noted thereon. If you received a "Notice to File Missing Parts" for this application, please submit any corrections to this Filing Receipt with your reply to the Notice. When the USPTO processes the reply to the Notice, the USPTO will generate another Filing Receipt incorporating the requested corrections**

Applicant(s)

Kong Weng Lee, Penang, MALAYSIA;
Kee Yean Ng, Penang, MALAYSIA;
Meng Ee Lee, Penang, MALAYSIA;
Kian Shin Lee, Penang, MALAYSIA;
Janet Bee Yin Chua, Penang, MALAYSIA;

Power of Attorney: The patent practitioners associated with Customer Number 022878

Domestic Priority data as claimed by applicant

This application is a CIP of 10/669,986 09/23/2003

Foreign Applications

If Required, Foreign Filing License Granted: 06/10/2004

The country code and number of your priority application, to be used for filing abroad under the Paris Convention, is **US 10/812,526**

Projected Publication Date: Not Applicable

Non-Publication Request: No

Early Publication Request: No

Title

Ceramic packaging for high brightness LED devices

Preliminary Class

362

PROTECTING YOUR INVENTION OUTSIDE THE UNITED STATES

Since the rights granted by a U.S. patent extend only throughout the territory of the United States and have no effect in a foreign country, an inventor who wishes patent protection in another country must apply for a patent in a specific country or in regional patent offices. Applicants may wish to consider the filing of an international application under the Patent Cooperation Treaty (PCT). An international (PCT) application generally has the same effect as a regular national patent application in each PCT-member country. The PCT process **simplifies** the filing of patent applications on the same invention in member countries, but **does not result** in a grant of "an international patent" and does not eliminate the need of applicants to file additional documents and fees in countries where patent protection is desired.

Almost every country has its own patent law, and a person desiring a patent in a particular country must make an application for patent in that country in accordance with its particular laws. Since the laws of many countries differ in various respects from the patent law of the United States, applicants are advised to seek guidance from specific foreign countries to ensure that patent rights are not lost prematurely.

Applicants also are advised that in the case of inventions made in the United States, the Director of the USPTO must issue a license before applicants can apply for a patent in a foreign country. The filing of a U.S. patent application serves as a request for a foreign filing license. The application's filing receipt contains further information and guidance as to the status of applicant's license for foreign filing.

Applicants may wish to consult the USPTO booklet, "General Information Concerning Patents" (specifically, the section entitled "Treaties and Foreign Patents") for more information on timeframes and deadlines for filing foreign patent applications. The guide is available either by contacting the USPTO Contact Center at 800-786-9199, or it can be viewed on the USPTO website at http://www.uspto.gov/web/offices/pac/doc/general/index.html.

For information on preventing theft of your intellectual property (patents, trademarks and copyrights), you may wish to consult the U.S. Government website, http://www.stopfakes.gov. Part of a Department of Commerce initiative, this website includes self-help "toolkits" giving innovators guidance on how to protect intellectual property in specific countries such as China, Korea and Mexico. For questions regarding patent enforcement issues, applicants may call the U.S. Government hotline at 1-866-999-HALT (1-866-999-4158).

LICENSE FOR FOREIGN FILING UNDER

Title 35, United States Code, Section 184

Title 37, Code of Federal Regulations, 5.11 & 5.15

GRANTED

The applicant has been granted a license under 35 U.S.C. 184, if the phrase "IF REQUIRED, FOREIGN FILING LICENSE GRANTED" followed by a date appears on this form. Such licenses are issued in all applications where the conditions for issuance of a license have been met, regardless of whether or not a license may be required as

set forth in 37 CFR 5.15. The scope and limitations of this license are set forth in 37 CFR 5.15(a) unless an earlier license has been issued under 37 CFR 5.15(b). The license is subject to revocation upon written notification. The date indicated is the effective date of the license, unless an earlier license of similar scope has been granted under 37 CFR 5.13 or 5.14.

This license is to be retained by the licensee and may be used at any time on or after the effective date thereof unless it is revoked. This license is automatically transferred to any related applications(s) filed under 37 CFR 1.53(d). This license is not retroactive.

The grant of a license does not in any way lessen the responsibility of a licensee for the security of the subject matter as imposed by any Government contract or the provisions of existing laws relating to espionage and the national security or the export of technical data. Licensees should apprise themselves of current regulations especially with respect to certain countries, of other agencies, particularly the Office of Defense Trade Controls, Department of State (with respect to Arms, Munitions and Implements of War (22 CFR 121-128)); the Bureau of Industry and Security, Department of Commerce (15 CFR parts 730-774); the Office of Foreign AssetsControl, Department of Treasury (31 CFR Parts 500+) and the Department of Energy.

NOT GRANTED

No license under 35 U.S.C. 184 has been granted at this time, if the phrase "IF REQUIRED, FOREIGN FILING LICENSE GRANTED" DOES NOT appear on this form. Applicant may still petition for a license under 37 CFR 5.12, if a license is desired before the expiration of 6 months from the filing date of the application. If 6 months has lapsed from the filing date of this application and the licensee has not received any indication of a secrecy order under 35 U.S.C. 181, the licensee may foreign file the application pursuant to 37 CFR 5.15(b).

UNITED STATES PATENT AND TRADEMARK OFFICE

Commissioner for Patents
United States Patent and Trademark Office
P.O. Box 1450
Alexandria, VA 22313-1450
www.uspto.gov

REED SMITH, LLP
TWO EMBARCADERO CENTER
SUITE 2000
SAN FRANCISCO CA 94111

COPY MAILED

OCT 12 2006

OFFICE OF PETITIONS

In re Application of	:	
Berman	:	
Application No. 10/812,528	:	DECISION ON PETITION
Filed: March 29, 2004	:	TO WITHDRAW
Attorney Docket No. 356508.02001	:	FROM RECORD
	:	

This is a decision on the Request to Withdraw as attorney or agent of record under 37 C.F.R. § 1.36(b), filed June 14, 2006.

The request is **APPROVED**.

A grantable request to withdraw as attorney/agent of record must be signed by every attorney/agent seeking to withdraw or contain a clear indication that one attorney is signing on behalf of another/others. A request to withdraw will not be approved unless at least 30 (thirty) days would remain between the date of approval and the later of the expiration date of a time to file a response or the expiration date of the maximum time period which can be extended under 37 C.F.R. § 1.136(a).

The request was signed by Doyle Johnson on behalf of all attorneys of record who are associated with this application.

All attorneys/agents associated with this application have been withdrawn.

Applicant is reminded that there is no attorney of record at this time.

The request to change the correspondence of record is not acceptable as the requested correspondence address is not that of: (1) the first named signing inventor; or (2) an intervening assignee of the entire interest under 37 C.F.R 3.71. All future communications from the Office will be directed to the first named signing inventor at the first copied address below until otherwise properly notified by the applicant.

In order to request or take action in a patent matter, the assignee must establish its ownership of the patent to the satisfaction of the Director. In this regard, a Statement under 37 CFR 3.73(b) must have either: (i) documentary evidence of a chain of title from the original owner to the assignee (*e.g.*, copy of an executed assignment), and a statement affirming that the documentary evidence of the chain of title from the original owner to the assignee was or concurrently is being submitted for recordation pursuant to § 3.11; or (ii) a statement specifying where documentary evidence of a chain of title from the original owner to the assignee is recorded in the assignment records of the Office (*e.g.*, reel and frame number).

There is an outstanding Office action mailed July 27, 2006 that requires a reply from the applicant.

Telephone inquiries concerning this decision should be directed to April Wise at 571-272-1642.

April M. Wise
Petitions Examiner
Office of Petitions

cc: ARTHUR BERMAN
5635 SNOWDON PLACE
SAN JOSE, CA 95138

cc: ARTHUR BERMAN
10440 BUBB ROAD
SUITE B
CUPERTINO, CA 95014

UNITED STATES PATENT AND TRADEMARK OFFICE

UNITED STATES DEPARTMENT OF COMMERCE
United States Patent and Trademark Office
Address: COMMISSIONER FOR PATENTS
P.O. Box 1450
Alexandria, Virginia 22313-1450
www.uspto.gov

APPLICATION NUMBER	FILING OR 371 (c) DATE	FIRST NAMED APPLICANT	ATTY. DOCKET NO./TITLE
10/812,528	03/29/2004	Arthur Berman	356508.02001

CONFIRMATION NO. 3305

OC000000020729949

OC000000020729949

58076
REED SMITH, LLP
TWO EMBARCADERO CENTER
SUITE 2000
SAN FRANCISCO, CA 94111

Date Mailed: 10/06/2006

NOTICE REGARDING CHANGE OF POWER OF ATTORNEY

This is in response to the Power of Attorney filed 06/14/2006.

- The withdrawal as attorney in this application has been accepted. Future correspondence will be mailed to the new address of record. 37 CFR 1.33.

April M Wise

APRIL M WISE
OP (571) 272-1642

FORMER ATTORNEY/AGENT COPY

UNITED STATES PATENT AND TRADEMARK OFFICE

Commissioner for Patents
United States Patent and Trademark Office
P.O. Box 1450
Alexandria, VA 22313-1450
www.uspto.gov

Dan Swayze
Texas Instruments Incorporated
M/S 3999
P.O. Box 655474
Dallas TX 75265

COPY MAILED

OCT 2 1 2004

OFFICE OF PETITIONS

In re Application of :
Martins :
Application No. 10/812,530 : DECISION GRANTING PETITION
Filed: March 30, 2004 :
Attorney Docket No. TI-35630 :

This is a decision on the petition under 37 CFR 1.53, filed October 4, 2004 (certificate of mailing September 29, 2004), requesting that the above-identified application be accorded a filing date of March 30, 2004, with 5 sheets of drawings (Figs. 1-5) described in the specification as part of the original disclosure.

On March 30, 2004, applicant deposited the above-identified application. On July 30, 2004, the Office mailed a Notice of Incomplete Nonprovisional Application, stating that the application was deposited without drawings and that the filing date would be the date of receipt of the drawings.

In response, on October 4, 2004 (certificate of mailing September 29, 2004), applicant filed the present petition and a copy of applicant's postcard receipt acknowledging receipt of "Informal Drawings 5 pgs" on March 30, 2004. Additionally, applicant submitted 5 sheets of drawings with the present petition.

Upon review of the record, the 5 sheets of drawings, deposited on March 30, 2004, have not been located among the application papers. However, the evidence is convincing that the application papers deposited on March 30, 2004, included 5 sheets of drawings, which were subsequently misplaced in the United States Patent and Trademark Office. Therefore, the application, including the 5 sheets of drawings, was complete on filing and will be granted a filing date of March 30, 2004.

Accordingly, the petition is granted.

The Notice of Incomplete Nonprovisional Application was sent in error and is hereby vacated. Accordingly, the $130.00 petition fee is unnecessary and will be credited to Deposit Account No. 20-0668.

The Office of Initial Patent Examination is directed to accorded the above-identified application a filing date of March 30, 2004, using the 5 sheets of drawings (Figs. 1-5) submitted with the present petition as part of the original disclosure.

Any inquiries related to this decision should be directed to the undersigned at (571) 272-3211.

Christina Tartera Donnell

Christina Tartera Donnell
Senior Petitions Attorney
Office of Petitions

UNITED STATES PATENT AND TRADEMARK OFFICE

COMMISSIONER FOR PATENTS
UNITED STATES PATENT AND TRADEMARK OFFICE
P.O. BOX 1450
ALEXANDRIA, VA 22313-1450
www.uspto.gov

MAILED

NOV - 8 2005

Technology Center 2100

TOWNSEND AND TOWNSEND AND CREW, LLP
TWO EMBARCADERO CENTER
EIGHTH FLOOR
SAN FRANCISCO CA 94111-3834

In re Application of: KANO
Application No. 10/812,537
Filed: March 29, 2004
For: METHOD AND APPARATUS FOR MULTISTAGE VOLUME LOCKING

DECISION ON PETITION TO MAKE SPECIAL (ACCELERATED EXAMINATION) UNDER MPEP §708.02 (VIII)

This is a response to the petition filed 08 September 2005, under 37 CFR §1.102(d) and MPEP §708.02 (VIII): Accelerated Examination, to make the above-identified application special.

The Petition is **GRANTED**.

MPEP §708.02, Section VIII which sets out the prerequisites for a grantable petition for Accelerated Examination under 37 C.F.R. §1.102(d) states in relevant part:

A new application (one which has not received any examination by the examiner) may be granted special status provided that applicant (and this term includes applicant's attorney or agent) complies with each of the following items:

(a) Submits a petition to make special accompanied by the fee set forth in **37 CFR 1.17(h)**;

(b) Presents all claims directed to a single invention, or if the Office determines that all the claims presented are not obviously directed to a single invention, will make an election without traverse as a prerequisite to the grant of special status;

(c) Submits a statement(s) that a pre-examination search was made, listing the field of search by class and subclass, publication, Chemical Abstracts, foreign patents, etc. The pre-examination search must be directed to the invention as claimed in the application for which special status is requested. A search made by a foreign patent office satisfies this requirement;

(d) Submits one copy each of the references deemed most closely related to the subject matter encompassed by the claims if said references are not already of record; and

(e) Submits a detailed discussion of the references, which discussion points out, with the particularity required by 37 CFR 1.111 (b) and (c), how the claimed subject matter is patentable over the references.

Applicant's submission meets all the criteria set out above. Accordingly, the petition is **GRANTED**. However, it is suggested that if the identical statement is being made to distinguish each reference from an independent claim, as in the instant petition, then the statement should simply be made once in the petition. (E.g., "Regarding independent claim 1, none of the references disclose . . . .")

The application file is being forwarded to the Examiner of Record for accelerated examination according to the procedures set forth in MPEP § 708.02, Section VIII.

Pinchus M. Laufer
Special Program Examiner
Technology Center 2100
Computer Architecture, Software and Information Security
571-272-3599

ds

UNITED STATES PATENT AND TRADEMARK OFFICE

COMMISSIONER FOR PATENTS
UNITED STATES PATENT AND TRADEMARK OFFICE
P.O. BOX 1450
ALEXANDRIA, VA 22313-1450
www.uspto.gov

JUL 14 2004

In re Application of
Bill Chee
Application No. 10/812,539
Filed: March 30, 2004
Attorney Docket No. 03124

DECISION ON PETITION

This is a decision on the petition to make special filed on June 9, 2004. The $130.00 petition fee has been received.

The petition is granted.

The petition to make special is based upon the existence of an actual infringement. A review of the petition shows that all of the requirements established in MPEP § 708.02(II) for a petition on that grounds have been satisfied. Therefore, petitioner is entitled to have this application handled special in accordance with MPEP § 708.02, subsection styled "Handling of Petitions to Make Special".

Accordingly, the examiner will treat this application as special throughout its prosecution. Prior to the first action on the merits, the examiner will conduct a rigorous search for potentially interfering applications. The interference search will be brought up to date prior to each successive action.

The Supervisory Patent Examiner of Patent Examining Art Unit 3724 is being advised of the granting of the instant petition, and will in turn advise the examiner to whom the application is assigned of the special status of this application and the need for action consistent with this Decision.

PETITION GRANTED.

Stephen Marcus, Special Program Examiner,
Patent Examining Groups 3710 and 3720

Bohan, Mathers & Associates, LLC
P.O. Box 17707
Portland, ME 04112-8707

SPE RESPONSE FOR CERTIFICATE OF CORRECTION

Paper No.: _____

DATE : 4/7/06

TO SPE OF : ART UNIT 3727

SUBJECT : Request for Certificate of Correction for Appl. No.: 10812539 Patent No.: 6905051

Please respond to this request for a certificate of correction within 7 days.

Please review the requested changes/corrections as shown in the **COCIN** document(s) in the IFW application image. No new matter should be introduced, nor should the scope or meaning of the claims be changed.

Please complete the response (see below) and forward the completed response to scanning using document code **COCX**.

Valerie Jackson
Certificates of Correction Branch
703-308-9390 ext. 114

Thank You For Your Assistance

The request for issuing the above-identified correction(s) is hereby:

Note your decision on the appropriate box.

- ☒ **Approved** — All changes apply.
- ☐ **Approved in Part** — Specify below which changes **do not** apply.
- ☐ **Denied** — State the reasons for denial below.

Comments: _____

NATHAN J. NEWHOUSE
SUPERVISORY PATENT EXAMINER

SPE

3727
Art Unit

UNITED STATES PATENT AND TRADEMARK OFFICE

Commissioner for Patents
United States Patent and Trademark Office
P.O. Box 1450
Alexandria, VA 22313-1450
www.uspto.g

WILLIAM J. DAVIS
BUILDING MATERIALS INVESTMENT CORPORATION
LEGAL DEPARTMENT
1361 ALPS ROAD
WAYNE, NJ 07470

COPY MAILED

AUG 14 2008

In re Application of	:	
Kerkar et al.	:	
Application No. 10/812,541	:	DECISION ON PETITION
Filed: March 30, 2004	:	
Attorney Docket No. FDN-2831	:	

This is a decision on the petition under the unintentional provisions of 37 CFR 1.137(b), filed February 6, 2008, to revive the above-identified application.

The petition is **GRANTED**.

The application became abandoned for failure to timely reply within the meaning of 37 CFR 1.113 to the final Office action mailed July 25, 2007, which set a shortened statutory period for reply of three (3) months. A one month extension of time under the provisions of 37 CFR 1.136(a) was obtained. Accordingly, the application became abandoned on November 26, 2007. A Notice of Abandonment was mailed February 11, 2008.

The petition satisfies the requirements of 37 CFR 1.137(b) in that petitioner has supplied (1) the reply in the form of a Notice of Appeal and fee of $510.00; (2) the petition fee of $1,540.00; and (3) a proper statement of unintentional delay.

The two-month period for filing an appeal brief under 37 CFR 41.37 (accompanied by the fee required by 37 CFR 41.20(b)(2)), runs from the date of this decision.

Further, the file does not indicate a change of address has been submitted, although the address given on the petition differs from the address of record. If appropriate, a request to change the address of record should be filed. A courtesy copy of this decision is being mailed to the address given on the petition; however, the Office will mail all future correspondence solely to the address of record.

Telephone inquiries concerning this decision should be directed to Joan Olszewski at (571) 272-7751.

This application is being referred to Technology Center AU 1794 to await the filing of an appeal brief or for such other appropriate reply as may be submitted to continue prosecution of the application.

Liana Walsh
Petitions Examiner
Office of Petitions

cc: Aasheesh Shravah
One Riverfront Plaza
Newark, New Jersey 07102-5400

PTO/SB/66 (03-09)
Approved for use through 03/31/2012. OMB 0651-0016
U.S. Patent and Trademark Office: U.S. DEPARTMENT OF COMMERCE
Under the Paperwork Reduction Act of 1995, no persons are required to respond to a collection of information unless it displays valid OMB control number.

PETITION TO ACCEPT UNINTENTIONALLY DELAYED PAYMENT OF MAINTENANCE FEE IN AN EXPIRED PATENT (37 CFR 1.378(c))

Patent Number	Issue Date (YYYY-MM-DD)	Application Number	Filing Date (YYYY-MM-DD)	Docket Number (if applicable)
6960032	2005-11-01	10812554	2004-03-30	O013 P00820-US1

CAUTION: Maintenance fee (and surcharge, if any) payment must correctly identify: (1) the patent number and (2) the application number of the actual U.S. application leading to issuance of that patent to ensure the fee(s) is/are associated with the correct patent. 37 CFR 1.366(c) and (d).

SMALL ENTITY
☐ Patentee claims, or has previously claimed, small entity status. See 37 CFR 1.27.

LOSS OF ENTITLEMENT TO SMALL ENTITY STATUS
☐ Patentee is no longer entitled to small entity status. See 37 CFR 1.27(g)

NOT Small Entity		Small Entity	
Fee	Code	Fee	Code
◉ 3 ½ year	(1551)	○ 3 ½ year	(2551)
○ 7 ½ year	(1552)	○ 7 ½ year	(2552)
○ 11 ½ year	(1553)	○ 11 ½ year	(2553)

SURCHARGE
The surcharge required by 37 CFR 1.20(i)(2) (Fee Code 1558) must be paid as a condition of accepting unintentionally delayed payment of the maintenance fee.

MAINTENANCE FEE (37 CFR 1.20(e)-(g))
The appropriate maintenance fee must be submitted with this petition.

STATEMENT
THE UNDERSIGNED CERTIFIES THAT THE DELAY IN PAYMENT OF THE MAINTENANCE FEE TO THIS PATENT WAS UNINTENTIONAL

PETITIONER(S) REQUEST THAT THE DELAYED PAYMENT OF THE MAINTENANCE FEE BE ACCEPTED AND THE PATENT REINSTATED

THIS PORTION MUST BE COMPLETED BY THE SIGNATORY OR SIGNATORIES

37 CFR 1.378(d) states: "Any petition under this section must be signed by an attorney or agent registered to practice before the Patent and Trademark Office, or by the patentee, the assignee, or other party in interest."

I certify, in accordance with 37 CFR 1.4(d)(4) that I am

◉ An attorney or agent registered to practice before the Patent and Trademark Office

○ A sole patentee

○ A joint patentee; I certify that I am authorized to sign this submission on behalf of all the other patentees.

○ A joint patentee; all of whom are signing this e-petition

○ The assignee of record of the entire interest

Patent Practitioner			
A signature of the applicant or representative is required in accordance with 37 CFR 1.33 and 10.18. Please see 37 CFR 1.4(d) for the form of the signature			
Signature	/stephen holmes/	Date (YYYY-MM-DD)	2010-05-28
Name	Stephen Holmes	Registration Number	34621

This collection of information is required by 37 CFR 1.378(c). The information is required to obtain or retain a benefit by the public which is to file (and by the USPTO to process) an application. Confidentiality is governed by 35 U.S.C. 122 and 37 CFR 1.11 and 1.14. This collection is estimated to take 1 hour to complete, including gathering, preparing, and submitting the completed application form to the USPTO. Time will vary depending upon the individual case. Any comments on the amount of time you require to complete this form and/ or suggestions for reducing this burden, should be sent to the Chief Information Officer, U.S. Patent and Trademark Office, U.S. Department of Commerce, P.O. Box 1450, Alexandria, VA 22313-1450. DO NOT SEND FEES OR COMPLETED FORMS TO THIS ADDRESS. **This form can only be used when in conjunction with EFS-Web. If this form is mailed to the USPTO, it may cause delays in reinstating the patent.**

Privacy Act Statement

The Privacy Act of 1974 (P.L. 93-579) requires that you be given certain information in connection with your submission of the attached form related to a patent application or patent. Accordingly, pursuant to the requirements of the Act, please be advised that: (1) the general authority for the collection of this information is 35 U.S.C. 2(b)(2); (2) furnishing of the information solicited is voluntary; and (3) the principal purpose for which the information is used by the U.S. Patent and Trademark Office is to process and/or examine your submission related to a patent application or patent. If you do not furnish the requested information, the U.S. Patent and Trademark Office may not be able to process and/or examine your submission, which may result in termination of proceedings or abandonment of the application or expiration of the patent.

The information provided by you in this form will be subject to the following routine uses:

1. The information on this form will be treated confidentially to the extent allowed under the Freedom of Information Act (5 U.S.C. 552) and the Privacy Act (5 U.S.C. 552a). Records from this system of records may be disclosed to the Department of Justice to determine whether the Freedom of Information Act requires disclosure of these records.

2. A record from this system of records may be disclosed, as a routine use, in the course of presenting evidence to a court, magistrate, or administrative tribunal, including disclosures to opposing counsel in the course of settlement negotiations.

3. A record in this system of records may be disclosed, as a routine use, to a Member of Congress submitting a request involving an individual, to whom the record pertains, when the individual has requested assistance from the Member with respect to the subject matter of the record.

4. A record in this system of records may be disclosed, as a routine use, to a contractor of the Agency having need for the information in order to perform a contract. Recipients of information shall be required to comply with the requirements of the Privacy Act of 1974, as amended, pursuant to 5 U.S.C. 552a(m).

5. A record related to an International Application filed under the Patent Cooperation Treaty in this system of records may be disclosed, as a routine use, to the International Bureau of the World Intellectual Property Organization, pursuant to the Patent Cooperation Treaty.

6. A record in this system of records may be disclosed, as a routine use, to another federal agency for purposes of National Security review (35 U.S.C. 181) and for review pursuant to the Atomic Energy Act (42 U.S.C. 218(c)).

7. A record from this system of records may be disclosed, as a routine use, to the Administrator, General Services, or his/her designee, during an inspection of records conducted by GSA as part of that agency's responsibility to recommend improvements in records management practices and programs, under authority of 44 U.S.C. 2904 and 2906. Such disclosure shall be made in accordance with the GSA regulations governing inspection of records for this purpose, and any other relevant (i.e., GSA or Commerce) directive. Such disclosure shall not be used to make determinations about individuals.

8. A record from this system of records may be disclosed, as a routine use, to the public after either publication of the application pursuant to 35 U.S.C. 122(b) or issuance of a patent pursuant to 35 U.S.C. 151. Further, a record may be disclosed, subject to the limitations of 37 CFR 1.14, as a routine use, to the public if the record was filed in an application which became abandoned or in which the proceedings were terminated and which application is referenced by either a published application, an application open to public inspections or an issued patent.

9. A record from this system of records may be disclosed, as a routine use, to a Federal, State, or local law enforcement agency, if the USPTO becomes aware of a violation or potential violation of law or regulation.

UNITED STATES PATENT AND TRADEMARK OFFICE

Commissioner for Patents
United States Patent and Trademark Office
P.O. Box 1450
Alexandria, VA 22313-1450
www.uspto.gov

In re Patent No. 6960032
Issue Date: November 1,2005
Application No. 10812554
Filed: March 30,2004
Attorney Docket No. P00820-US1

:DECISION GRANTING PETITION
:UNDER 37 CFR 1.378(c)

This is a decision on the electronic petition, filed May 28,2010 ,under 37 CFR 1.378(c) to accept the unintentionally delayed payment of the 3.5 year maintenance fee for the above-identified patent.

The petition is **GRANTED**.

The maintenance fee is accepted, and the above-identified patent reinstated as of May 28,2010 . This decision also constitutes notice that the fee has been accepted. An electronic copy of the petition and this decision has been created as an entry in the Image File Wrapper. Nevertheless, petitioner should print and retain an independent copy.

Telephone inquiries related to this electronic decision should be directed to the Electronic Business Center at 1-866-217-9197.

SPE RESPONSE FOR CERTIFICATE OF CORRECTION

Paper No.: _____

DATE : August 17, 2006

TO SPE OF : ART UNIT 3766

SUBJECT : Request for Certificate of Correction for Appl. No.: 10/812577 Patent No.: 7,055,631 B2

Please respond to this request for a certificate of correction within 7 days.

Please review the requested changes/corrections as shown in the **COCIN** document(s) in the IFW application image. No new matter should be introduced, nor should the scope or meaning of the claims be changed.

Please complete the response (see below) and forward the completed response to scanning using document code **COCX**.

Elisha Evans

Certificates of Correction Branch

703-308-9390 ext. 110

Thank You For Your Assistance

The request for issuing the above-identified correction(s) is hereby:

Note your decision on the appropriate box.

- [X] **Approved** — All changes apply.
- [ ] **Approved in Part** — Specify below which changes **do not** apply.
- [ ] **Denied** — State the reasons for denial below.

Comments: _____

_____

_____

_____

_____

SPE

3766
Art Unit

PTOL-306 (REV. 7/03)

U.S. DEPARTMENT OF COMMERCE Patent and Trademark Office

ROBERT E. PEZZUTO
SUPERVISORY PRIMARY EXAMINER

PTO/SB/44 (04-05)
Approved for use through 04/30/2007. OMB 0651-0033
U.S. Patent and Trademark Office; U.S. DEPARTMENT OF COMMERCE
Under the Paperwork Reduction Act of 1995, no persons are required to respond to a collection of information unless it displays a valid OMB control number.
(Also Form PTO-1050)

UNITED STATES PATENT AND TRADEMARK OFFICE
CERTIFICATE OF CORRECTION

PATENT NO. : 7,055,631
APPLICATION NO.: 10/812,577
ISSUE DATE : Jun. 6, 2006
INVENTOR(S) : Mitchell et al.

It is certified that an error appears or errors appear in the above-identified patent and that said Letters Patent is hereby corrected as shown below:

In the Claims

Column 20, lines 3-14, Claim 12

Delete Claim 12

"12. A protective sleeve for installation around a drill pipe used to drill a wellbore in an underground formation, the protective sleeve preferentially contacting the I.D. of a well casing or bore when the drill pipe deflects off center in the casing or bore to protect the casing or bore from contact with the drill pipe or its tool joints during rotation of the drill pipe, and which the sleeve has a generally cylindrical configuration with an internal I.D. for contact with the O.D. of the drill pipe wherein the sleeve is a multi-component construction comprising an outer shell and a liner positioned within the shell wherein the shell has a hardness in the range of 75 to 123 Rockwell R and is greater than the liner."

MAILING ADDRESS OF SENDER (Please do not use customer number below):
CHRISTIE, PARKER & HALE, LLP.
P.O. Box 7068
Pasadena, California 91109-7068

This collection of information is required by 37 CFR 1.322, 1.323, and 1.324. The information is required to obtain or retain a benefit by the public which is to file (and by the USPTO to process) an application. Confidentiality is governed by 35 U.S.C. 122 and 37 CFR 1.14. This collection is estimated to take 1.0 hour to complete, including gathering, preparing, and submitting the completed application form to the USPTO. Time will vary depending upon the individual case. Any comments on the amount of time you require to complete this form and/or suggestions for reducing this burden, should be sent to the Chief Information Officer, U.S. Patent and Trademark Office, U.S. Department of Commerce, P.O. Box 1450, Alexandria, VA 22313-1450. DO NOT SEND FEES OR COMPLETED FORMS TO THIS ADDRESS. SEND TO: **Attention Certificate of Corrections Branch, Commissioner for Patents, P.O. Box 1450, Alexandria, VA 22313-1450.**

If you need assistance in completing the form, call 1-800-PTO-9199 and select option 2.

PTO/SB/44 (04-05)
Approved for use through 04/30/2007. OMB 0651-0033
U.S. Patent and Trademark Office; U.S. DEPARTMENT OF COMMERCE
Under the Paperwork Reduction Act of 1995, no persons are required to respond to a collection of information unless it displays a valid OMB control number.
(Also Form PTO-1050)

UNITED STATES PATENT AND TRADEMARK OFFICE
CERTIFICATE OF CORRECTION

PATENT NO. : 7,055,631
APPLICATION NO.: 10/812,577
ISSUE DATE : Jun. 6, 2006
INVENTOR(S) : Mitchell et al.

It is certified that an error appears or errors appear in the above-identified patent and that said Letters Patent is hereby corrected as shown below:

In the Claims

Column 20, lines 3-14, Claim 12

Delete Claim 12

"12. A protective sleeve for installation around a drill pipe used to drill a wellbore in an underground formation, the protective sleeve preferentially contacting the I.D. of a well casing or bore when the drill pipe deflects off center in the casing or bore to protect the casing or bore from contact with the drill pipe or its tool joints during rotation of the drill pipe, and which the sleeve has a generally cylindrical configuration with an internal I.D. for contact with the O.D. of the drill pipe wherein the sleeve is a multi-component construction comprising an outer shell and a liner positioned within the shell wherein the shell has a hardness in the range of 75 to 123 Rockwell R and is greater than the liner."

MAILING ADDRESS OF SENDER (Please do not use customer number below):

CHRISTIE, PARKER & HALE, LLP.
P.O. Box 7068
Pasadena, California 91109-7068

This collection of information is required by 37 CFR 1.322, 1.323, and 1.324. The information is required to obtain or retain a benefit by the public which is to file (and by the USPTO to process) an application. Confidentiality is governed by 35 U.S.C. 122 and 37 CFR 1.14. This collection is estimated to take 1.0 hour to complete, including gathering, preparing, and submitting the completed application form to the USPTO. Time will vary depending upon the individual case. Any comments on the amount of time you require to complete this form and/or suggestions for reducing this burden, should be sent to the Chief Information Officer, U.S. Patent and Trademark Office, U.S. Department of Commerce, P.O. Box 1450, Alexandria, VA 22313-1450. DO NOT SEND FEES OR COMPLETED FORMS TO THIS ADDRESS. SEND TO: **Attention Certificate of Corrections Branch, Commissioner for Patents, P.O. Box 1450, Alexandria, VA 22313-1450.**

If you need assistance in completing the form, call 1-800-PTO-9199 and select option 2.

UNITED STATES PATENT AND TRADEMARK OFFICE

Commissioner for Patents
United States Patent and Trademark Office
P.O. Box 1450
Alexandria, VA 22313-1450
www.uspto.gov

HAVERSTOCK & OWENS LLP
162 NORTH WOLFE ROAD
SUNNYVALE, CA 94086

COPY MAILED

SEP 16 2004

OFFICE OF PETITIONS

In re Application of :
Sharon Zohar :
Application No. 10/812,579 :
Filed: March 29, 2004 :
Attorney Docket No. MAGMA-00702 :

ON PETITION

This is a notice regarding your request for acceptance of a fee deficiency submission under 37 CFR 1.28. On September 1, 1998, the Court of Appeals for the Federal Circuit held that 37 CFR 1.28(c) is the sole provision governing the time for correction of the erroneous payment of the issue fee as a small entity. **See DH Technology v. Synergystex International, Inc. 154 F.3d 1333, 47 USPQ2d 1865 (Fed. Cir. Sept. 1, 1998).**

The Office no longer investigates or rejects original or reissue applications under 37 CFR 1.56. **1098 Off. Gaz. Pat. Office 502 (January 3, 1989)**. Therefore, nothing in this Notice is intended to imply that an investigation was done.

Your fee deficiency submission under 37 CFR 1.28 is hereby **ACCEPTED**.

Telephone inquiries concerning this decision should be directed to the undersigned at (703) 306-5594.

Retta Williams

Retta Williams
Petitions Examiner
Office of Petitions
Office of the Deputy Commissioner
for Patent Examination Policy

UNITED STATES PATENT AND TRADEMARK OFFICE

Commissioner for Patents
United States Patent and Trademark Office
P.O. Box 1450
Alexandria, VA 22313-1450
www.uspto.gov

KATHRYN A. MARRA
GENERAL MOTORS CORPORATION
LEGAL STAFF, MAIL CODE 482-c23-b21
P.O. BOX 300
DETROIT MI 48265-3000

COPY MAILED
MAY 1 8 2006
OFFICE OF PETITIONS

In re Application of	:	
Sanjee M. Naik	:	
Application No. 10/812,584	:	ON PETITION
Filed: March 30, 2004	:	
Attorney Docket No. GP-303148	:	

This is a decision on the petition, filed May 15, 2006, under 37 CFR 1.313(c)(2) to withdraw the above-identified application from issue after payment of the issue fee.

The petition is **GRANTED**.

The above-identified application is withdrawn from issue for consideration of a submission under 37 CFR 1.114 (request for continued examination). See 37 CFR 1.313(c)(2).

Petitioner is advised that the issue fee paid on April 19, 2006, in the above-identified application cannot be refunded. If, however, the above-identified application is again allowed, petitioner may request that it be applied towards the issue fee required by the new Notice of Allowance.[1]

The instant petition under 37 CFR 1.313(c)(2), the RCE, and the IDS are not signed by an attorney of record. However, in accordance with 37 CFR 1.34(a), the signature of Vincent A. Cichosz appearing on the correspondence shall constitute a representation to the United States Patent and Trademark Office that he is authorized to represent the particular party in whose behalf he act. However, if Mr. Cichosz desires to receive correspondence regarding this file, the appropriate power of attorney documentation must be submitted. A courtesy copy of this decision is being mailed to Mr. Cichosz, the petitioner herein. Until otherwise instructed, all future correspondence regarding this application file will be directed solely to the

---

[1] The request to apply the issue fee to the new Notice may be satisfied by completing and returning the new Issue Fee Transmittal Form PTOL-85(b), which includes the following language thereon: "Commissioner for Patents is requested to apply the Issue Fee and Publication Fee (if any) or re-apply any previously paid issue fee to the application identified above." Petitioner is advised that, whether a fee is indicated as being due or not, the issue Fee Transmittal Form **must** be completed and timely submitted to avoid abandonment. Note the language in bold text on the first page of the Notice of Allowance and Fee(s) Due (PTOL-85).

above-noted correspondence address of record.

Telephone inquiries should be directed to the undersigned at (571) 272-3208.

This matter is being referred to Technology Center Art Unit 3748 for processing of the request for continued examination under 37 CFR 1.114 filed May 15, 2006.

Karen Creasy
Petitions Examiner
Office of Petitions

cc:

CICHOSZ AND CICHOSZ PLLC
532 N. MAIN STREET
MILFORD, MI 48381

UNITED STATES PATENT AND TRADEMARK OFFICE

COMMISSIONER FOR PATENTS
UNITED STATES PATENT AND TRADEMARK OFFICE
P.O. BOX 1450
ALEXANDRIA, VA 22313-1450
www.uspto.gov

Rutan & Tucker, LLP.
Hani Z. Sayed
611 Anton Boulevard - Suite 1400
Costa Mesa, CA 92626

COPY MAILED

NOV 21 2007

OFFICE OF PETITIONS

In re Application of	:	
Sundergopal Sridhar, et. al.	:	
Application No. 10/812,586	:	NOTICE
Filed: March 29, 2004	:	
Attorney Docket No. 101090.0004US	:	

This is a notice regarding your request for acceptance of a fee deficiency submission under 37 CFR 1.28, filed by facsimile transmission on September 7, 2007. On September 1, 1998, the Court of Appeals for the Federal Circuit held that 37 CFR 1.28(c) is the sole provision governing the time for correction of the erroneous payment of the issue fee as a small entity. **See DH Technology v. Synergystex International, Inc. 154 F.3d 1333, 47 USPQ2d 1865 (Fed. Cir. Sept. 1, 1998).**

The Office no longer investigates or rejects original or reissue applications under 37 CFR 1.56. **1098 Off. Gaz. Pat. Office 502 (January 3, 1989)**. Therefore, nothing in this Notice is intended to imply that an investigation was done.

In view of the above, your fee deficiency submission under 37 CFR 1.28 is hereby **ACCEPTED**, and status as a small entity has been removed. All future fees must be paid at the large entity rate.

Inquiries related to this communication should be directed to the undersigned at (571) 272-3226.

Andrea Smith
Petitions Examiner
Office of Petitions

UNITED STATES PATENT AND TRADEMARK OFFICE

Commissioner for Patents
United States Patent and Trademark Office
P.O. Box 1450
Alexandria, VA 22313-1450
www.uspto.gov

Rutan & Tucker, LLP.
Hani Z. Sayed
611 Anton Blvd. - Suite 1400
Costa Mesa, CA 92626

COPY MAILED

NOV 20 2007

OFFICE OF PETITIONS

In re Application of	:	
Sundergopal Sridhar, et. al.	:	
Application No. 10/812,586	:	ON PETITION
Filed: March 29, 2004	:	
Attorney Docket No. 101090.0004US	:	

This is a decision on the petition under 37 CFR 1.137(b), filed on September 7, 2007, to revive the above-identified application.

The application became abandoned for failure to timely respond to the Notice of Allowance and Fee(s) Due mailed January 19, 2007. A Notice of Abandonment was mailed on August 8, 2007.

The petition satisfies the requirements of 37 CFR 1.137(b), in that, petitioner has supplied (1) the reply in the form of $1,400 for payment of the issue fee and $300 for payment of the publication fee; (2) the petition fee of $1,500; and (3) a proper statement of unintentional delay. Therefore, the petition is **GRANTED**.

This application file is being referred to the Office of Publications for further processing into a patent.

Telephone inquiries concerning this decision should be directed to the undersigned at (571) 272-3226.

Andrea Smith
Petitions Examiner
Office of Petitions

UNITED STATES PATENT AND TRADEMARK OFFICE

Commissioner for Patents
United States Patent and Trademark Office
P.O. Box 1450
Alexandria, VA 22313-1450
www.uspto.gov

MOTOROLA, INC.
1303 EAST ALGONQUIN ROAD
IL01/3RD
SCHAUMBURG IL 60196

COPY MAILED
APR 25 2006
OFFICE OF PETITIONS

In re Application of
J. Yu Huinan et al.
Application No. 10/812,601
Filed: March 30, 2004
Attorney Docket No.: CML01085T

: DECISION GRANTING PETITION

This is a decision on the paper titled "Response to Notice to File Missing Parts", filed September 10, 2004, which is treated as a petition under 37 CFR 1.182.

The instant application was filed March 30, 2004 and a filing date was accorded. However, a Notice to File Missing Parts mailed June 8, 2004 indicated that the Oath or Declaration was unsigned.

In response thereof, on August 2, 2004, petitioner filed an executed Oath or Declaration. A review of the file reveals that the oath or declaration filed only includes the signatures of two of the five inventors. Petitioner files the instant petition to correct the response filed August 2, 2004 with an indication that the response filed August 2, 2004 was received in the USPTO with some of the pages missing. Petitioner submits a postcard receipt to show that a complete Oath or Declaration, containing 12 pages, was mailed. The petition also includes an Oath or Declaration executed by five inventors.

The argument and evidence supplied with the petition have been carefully considered, but are not persuasive. The USPTO has a well-established and well-publicized practice of providing a receipt for papers filed in the USPTO to any applicant desiring a receipt. The practice requires that any paper for which a receipt is desired be filed in the USPTO with a self-addressed postcard identifying the paper. A postcard receipt which itemizes and properly identifies the papers which are being filed serves as prima facie evidence of receipt in the USPTO of all the items listed thereon on the date stamped thereon by the USPTO. See section 503, Manual of Patent Examining Procedure (MPEP 503). Unfortunately, petitioners' postcard receipt does not bear an Office-date stamp from the USPTO. As such, the postcard receipt does not serve as evidence that the items listed therein were received in the USPTO and no other proof has been submitted to prove that a complete response to the Notice to File Missing Parts was submitted on August 2, 2004.

However, since the response filed August 2, 2004 was incomplete, and since the petition and supplemental declaration filed September 10, 2004 were after the two month period set for response, to avoid abandonment, petitioner's deposit account no. 50-2117 has been charged in the amount of $420.00 for a two month extension of time, per the authorization found in the petition to charge any additional fees.

In view thereof, the supplemental oath or declaration to complete the response filed August 2, 2004 is accepted and the petition is **GRANTED** and a corrected filing receipt is included with this decision.

This matter is being referred to the Publishing Division to be processed into a patent.

Telephone inquiries regarding this decision should be directed to the undersigned Petitions Attorney at (571) 272-3212.

Patricia Faison-Ball

Patricia Faison-Ball
Senior Petitions Attorney
Office of Petitions

UNITED STATES DEPARTMENT OF COMMERCE
Patent and Trademark Office
ASSISTANT SECRETARY OF COMMERCE AND
COMMISSIONER OF PATENTS AND TRADEMARKS
Washington, DC 20231

9/4/08

Patent No. :7083823
Inventor(s) : PETER W. ESTELLE
Issued : 8/1/2006
Title : MONITORING SYSTEM AND METHOD FOR FLUID DISPENSING SYSTEM
Atty.doc./File No.

Request for Certificates of Correction

Consideration has been given to your request for the issuance of a Certificate of Correction, for the above – identified patent under the provisions of CFR 1.322.

Inspection of the application for the patent reveals that col. 6 equation is printed in accordance with the record. Therefore being no fault on the Patent and Trademark Office, It has no authority to issue a certificate of correction under the provision of 1.322.

In view of the forgoing, your request in this matter, is hereby denied.

Future written correspondence concerning this matter should be filed and directed to Decisions & Certificates of Correction Branch.

Henry Randall
Cecelia Newman
Decisions & Certificates
of Correction Branch
(703) 308-9390 Ext. 108

WOOD HERRON & EVANS, LLP
2700 CAREW TOWER
CINCINNATI, OH 45202

HR/MD

UNITED STATES PATENT AND TRADEMARK OFFICE

COMMISSIONER FOR PATENTS
UNITED STATES PATENT AND TRADEMARK OFFICE
P.O. BOX 1450
ALEXANDRIA, VA 22313-1450
www.uspto.gov

Stephen M. Nipper
DYKAS, SHAVER & NIPPER, LLP
P O Box 877
Boise, ID 83701-0877

MAILED
FROM DIRECTORS OFFICE

JAN 26 2005

TECHNOLOGY CENTER 3600

In re Application of:
Michael J. Mitrovich
Serial No. 10/812,666
Filed: March 29, 2004
For: STICK LUBRICANT AND APPLICATOR

DECISION ON PETITION TO MAKE SPECIAL (INFRINGEMENT & ENERGY)

This is a decision on the petition filed November 11, 2004 under 37 CFR 1.102 (c) and 37 C.F.R §1.102(d) to make the above-identified application special under the accelerated examination procedure set forth in MPEP 708.02, Section II: Infringement and VI: Energy.

A grantable petition to make an application special under 37 C.F.R. 1.102 (c), MPEP 708.02, Section VI for an invention which materially contributes to (A) the discovery or development of energy resources, or (B) the more efficient utilization and conservation of energy resources must be accompanied by statements under 37 CFR 1.102 by applicant or his attorney explaining how the invention materially contributes to category (A) or (B) set forth above.

The petition states that the present invention conserves energy in that it reduces rail car friction thereby increasing fuel efficiency of the railroad industry. However, applicant has not provided any facts in support of this statement. The petition should include an explanation describing the features and/or uses of the claimed invention which result in the conservation of energy. Additionally, the petition itself should provide all the facts necessary to render a decision. For example, it is unclear what is meant or encompassed by "reduced rail car friction" or "increasing fuel efficiency". The statement is inadequate to establish for the record the discovery or development of energy resources, or more efficient utilization and conservation of energy resources.

For the above stated reasons, the petition to make special under 37 C.F.R. 1.102 (c), MPEP 708.02, Section VI: Energy is **DISMISSED**.

MPEP 708.02 states that a Petition to Make Special based on Infringement must have the following: (1) the appropriate petition fee under 37 CFR 1.17(h); (2) a statement by the assignee, applicant, or attorney alleging: (A) that there is an infringing device or product actually on the market or method in use; (B) that a rigid comparison of the

alleged infringing device, product or method with the claims of the application has been made, and that, in his or her opinion, some of the claims are unquestionably infringed; and (C) that he or she has made a careful and thorough search of the prior art, or has good knowledge of the prior art, and has sent a copy of the references deemed most closely related to the subject matter encompassed by the claims.

The petition lacks requirement 2(C) above. While applicant states that he has made a thorough search of the prior art and has good knowledge of the pertinent prior art no copies or list of the art has been provided. Applicant should provide a listing of the pertinent prior art or most closely related subject matter. If pertinent prior art or the most closely related subject matter is provided such is a sufficient showing for the petition process. However, for examination purposes applicant should provide the pertinent prior art in an IDS.

In view of these deficiencies, the petition to make under 37 C.F.R §1.102(d), MPEP 708.02, Section II: Infringement is **DISMISSED**.

Any request for reconsideration must be filed within TWO MONTHS of the date of this decision. Extensions of time under 37 CFR 1.136(a) are permitted. Should petitioner desire reconsideration, he should supplement this petition by a declaration or statement giving the information as outlined above. Applicant should promptly submit a renewed petition to the

Commissioner of Patents and Trademarks, Washington, D.C. 20231. The envelope should indicate that the correspondence be brought to the attention of Technology Center 3600.

Until the renewed petition is submitted, the application will be returned to the examiner's docket to await treatment on the merits in the normal order of examination.

Randolph A. Reese
Special Programs Examiner
Technology Center 3600
(703) 308-2121

RAR/jwk 1/24/05

UNITED STATES PATENT AND TRADEMARK OFFICE

COMMISSIONER FOR PATENTS
UNITED STATES PATENT AND TRADEMARK OFFICE
P.O. BOX 1450
ALEXANDRIA, VA 22313-1450
www.uspto.gov

Stephen M. Nipper
DYKAS, SHAVER & NIPPER, LLP
P O Box 877
Boise, ID 83701-0877

MAILED
FROM DIRECTORS OFFICE

JAN 26 2005

TECHNOLOGY CENTER 3600

JAN 31 2005

In re Application of:
Michael J. Mitrovich
Serial No. 10/812,666
Filed: March 29, 2004
For: STICK LUBRICANT AND APPLICATOR

CALENDAR
DUE 3/26/05
BY 880

DECISION ON PETITION TO MAKE SPECIAL (INFRINGEMENT & ENERGY)

This is a decision on the petition filed November 11, 2004 under 37 CFR 1.102 (c) and 37 C.F.R §1.102(d) to make the above-identified application special under the accelerated examination procedure set forth in MPEP 708.02, Section II: Infringement and VI: Energy.

A grantable petition to make an application special under 37 C.F.R. 1.102 (c), MPEP 708.02, Section VI for an invention which materially contributes to (A) the discovery or development of energy resources, or (B) the more efficient utilization and conservation of energy resources must be accompanied by statements under 37 CFR 1.102 by applicant or his attorney explaining how the invention materially contributes to category (A) or (B) set forth above.

The petition states that the present invention conserves energy in that it reduces rail car friction thereby increasing fuel efficiency of the railroad industry. However, applicant has not provided any facts in support of this statement. The petition should include an explanation describing the features and/or uses of the claimed invention which result in the conservation of energy. Additionally, the petition itself should provide all the facts necessary to render a decision. For example, it is unclear what is meant or encompassed by "reduced rail car friction" or "increasing fuel efficiency". The statement is inadequate to establish for the record the discovery or development of energy resources, or more efficient utilization and conservation of energy resources.

For the above stated reasons, the petition to make special under 37 C.F.R. 1.102 (c), MPEP 708.02, Section VI: Energy is **DISMISSED**.

MPEP 708.02 states that a Petition to Make Special based on Infringement must have the following: (1) the appropriate petition fee under 37 CFR 1.17(h); (2) a statement by the assignee, applicant, or attorney alleging: (A) that there is an infringing device or product actually on the market or method in use; (B) that a rigid comparison of the

alleged infringing device, product or method with the claims of the application has been made, and that, in his or her opinion, some of the claims are unquestionably infringed; and (C) that he or she has made a careful and thorough search of the prior art, or has good knowledge of the prior art, and has sent a copy of the references deemed most closely related to the subject matter encompassed by the claims.

The petition lacks requirement 2(C) above. While applicant states that he has made a thorough search of the prior art and has good knowledge of the pertinent prior art no copies or list of the art has been provided. Applicant should provide a listing of the pertinent prior art or most closely related subject matter. If pertinent prior art or the most closely related subject matter is provided such is a sufficient showing for the petition process. However, for examination purposes applicant should provide the pertinent prior art in an IDS.

In view of these deficiencies, the petition to make under 37 C.F.R §1.102(d), MPEP 708.02, Section II: Infringement is **DISMISSED**.

Any request for reconsideration must be filed within TWO MONTHS of the date of this decision. Extensions of time under 37 CFR 1.136(a) are permitted. Should petitioner desire reconsideration, he should supplement this petition by a declaration or statement giving the information as outlined above. Applicant should promptly submit a renewed petition to the

Commissioner of Patents and Trademarks, Washington, D.C. 20231. The envelope should indicate that the correspondence be brought to the attention of Technology Center 3600.

Until the renewed petition is submitted, the application will be returned to the examiner's docket to await treatment on the merits in the normal order of examination.

Randolph A. Reese
Special Programs Examiner
Technology Center 3600
(703) 308-2121

RAR/jwk 1/24/05

UNITED STATES PATENT AND TRADEMARK OFFICE

Commissioner for Patents
United States Patent and Trademark Office
P.O. Box 1450
Alexandria, VA 22313-1450
www.uspto.gov

AUG - 1 2005

STEPHEN M. NIPPER
DYKAS, SHAVER & NIPPER, LLP
PO BOX 877
BOISE, ID 83701-0877

In re application of	:	**DECISION ON PETITION**
Michael J. Mitrovich	:	**TO MAKE SPECIAL**
Application No. 10/812,666	:	**(INFRINGEMENT)**
Filed: March 29, 2004	:	
For: STICK LUBRICANT AND APPLICATOR	:	

This is a decision on the renewed petition under 37 C.F.R § 1.102(d) filed July 25, 2005 to make the above-identified application special.

The petition requests that the above-identified application be made special under the procedure set forth in M.P.E.P. § 708.02, item II: Infringement.

MPEP 708.02 states that a Petition to Make Special based on Infringement must have the following: (1) the appropriate petition fee under 37 CFR 1.17(i); (2) a statement by the assignee, applicant, or attorney alleging: (A) that there is an infringing device or product actually on the market or method in use; (B) that a rigid comparison of the alleged infringing device, product or method with the claims of the application has been made, and that, in his or her opinion, some of the claims are unquestionably infringed; and (C) that he or she has made a careful and thorough search of the prior art, or has good knowledge of the prior art, and has sent a copy of the references deemed most closely related to the subject matter encompassed by the claims.

The renewed petition filed July 25, 2005 meets all of the requirements above and, therefore, the petition is **GRANTED**.

The examiner is directed (1) to make an interference search for possible interfering applications; (2) to promptly examine this application out of turn; and (3) if any interfering application is discovered, to examine such application simultaneously and state in the first official letter of such application that it is being taken out of turn because of a possible interference.

Petitioner is advised that this application will continue to be special, throughout its entire prosecution and pendency, including interference and appeal, if any, only if petitioner makes a prompt *bona fide* effort, in response to each Office action, to place the application in condition for allowance, even if it is necessary to conduct an interview with the examiner to accomplish this purpose.

Steven N. Meyers
Special Programs Examiner
Technology Center 3600
(571) 272-6611

SNM/dew: 07/29/05

UNITED STATES PATENT AND TRADEMARK OFFICE

Commissioner for Patents
United States Patent and Trademark Office
P.O. Box 1450
Alexandria, VA 22313-1450
www.uspto.gov

JAGTIANI + GUTTAG
10363-A DEMOCRACY LANE
FAIRFAX VA 22030

COPY MAILED

AUG 2 6 2008

OFFICE OF PETITIONS

In re Application of

Theodore John Cole, et al.
Application No. 10/812,672
Filed: March 30, 2004
Attorney Docket No. VIBP-0001-UT1

DECISION ON PETITION
TO WITHDRAW
FROM RECORD

This is a decision on the Request to Withdraw as attorney or agent of record under 37 C.F.R. § 1.36(b), filed April 30, 2008.

The request is **NOT APPROVED**.

A grantable request to withdraw as attorney/agent of record must be signed by every attorney/agent seeking to withdraw or contain a clear indication that one attorney is signing on behalf of another/others. A request to withdraw will not be approved unless at least 30 (thirty) days would remain between the date of approval and the later of the expiration date of a time to file a response or the expiration date of the maximum time period which can be extended under 37 C.F.R. § 1.136(a).

The Office cannot approve the request at this time since the reasons provided do not meet any of the conditions under the mandatory or permissive categories enumerated in 37 CFR 10.40. Section 10.40 of Title 37 of the Code of Federal Regulation states, "[a] practitioner shall not withdraw from employment in a proceeding before the Office without permission from the Office[.]" More specifically, 37 CFR 10.40 states, "[i]f paragraph (b) of this section is not applicable, a practitioner may not request permission to withdraw in matter pending before the Office unless such request or such withdrawal is" for one the permissive reasons listed in 37 CFR 10.40(c). The reasons set forth in the request, ***attorney submits this request because the registrant attorney has been unable to receive direction/authorization from registrant on proceeding***, do not meet any the conditions set forth in 37 CFR 10.40.

All future communications from the Office will continue to be directed to the above-listed address until otherwise notified by applicant.

Telephone inquiries concerning this decision should be directed to Terri Williams at 571-272- 2991.

T. Williams

Terri Williams
Petitions Examiner
Office of Petitions

cc: **Dr. Theodore J. Cole**
Vibrational Pathways
11974 Lebanon Road, Suite 228
Cincinnati, OH 45241

UNITED STATES PATENT AND TRADEMARK OFFICE

Commissioner for Patents
United States Patent and Trademark Office
P.O. Box 1450
Alexandria, VA 22313-1450
www.uspto.gov

FEB 14 2005

LEYENDECKER LEMIRE & DALEY, LLC
C/O PORTFOLIO IP P.O BOX 52057
MINNEAPOLIS MN 55402

In re Application of	:	
Arvin Liester	:	DECISION ON PETITION
Serial No.: 10/812,677	:	
Filed: December 28, 2004	:	
For: Wireless Egg System	:	

This is in response to applicants' petition filed December 29, 2004, to make the above-identified application special under the provisions of 37 CFR 1.102(c), based on the age of the applicant.

Applicant has satisfied the provisions set forth in M.P.E.P. 708.02, IV. Therefore the petition is **GRANTED**.

The application will be forwarded to the examiner for action on the merits commensurate with this decision.

Should there be any questions with regard to this letter please contact Esther M. Kepplinger by letter addressed to the Director, Technology Center 3700, P.O. Box 1450 Alexandria, VA 22313-1450 Washington, DC 20231, or by telephone at (571) 272-2975 or by facsimile transmission at (571)273-0275.

Esther M Kepplinger

Esther M. Kepplinger
Director,
Technology Center 3700

UNITED STATES PATENT AND TRADEMARK OFFICE

Commissioner for Patents
United States Patent and Trademark Office
P.O. Box 1450
Alexandria, VA 22313-1450
www.uspto.gov

MARTINE PENILLA & GENCARELLA, LLP
710 LAKEWAY DRIVE
SUITE 200
SUNNYVALE CA 94085

COPY MAILED

NOV 06 2008

OFFICE OF PETITIONS

In re Application of	:	
Nobuhisa Takabayashi, et al.	:	
Application No. 10/812,691	:	DECISION GRANTING PETITION
Filed: March 29, 2004	:	UNDER 37 CFR 1.313(c)(2)
Attorney Docket No. ITECP010	:	

This is a decision on the petition under 37 CFR 1.313(c)(2), filed November 6, 2008, to withdraw the above-identified application from issue after payment of the issue fee.

The petition is **GRANTED**.

The above-identified application is withdrawn from issue for consideration of a submission under 37 CFR 1.114 (request for continued examination). *See* 37 CFR 1.313(c)(2).

Petitioner is advised that the issue fee paid on September 29, 2008 cannot be refunded. If, however, this application is again allowed, petitioner may request that it be applied towards the issue fee required by the new Notice of Allowance.[1]

Telephone inquiries should be directed to Terri Williams at (571) 272-2991.

This application is being referred to Technology Center AU 2625 for processing of the request for continued examination under 37 CFR 1.114 and for consideration of the concurrently filed information disclosure statement.

Terri Williams
Petitions Examiner
Office of Petitions

---

[1] *The request to apply the issue fee to the new Notice may be satisfied by completing and returning the new Part B – Fee(s) Transmittal Form (along with any balance due at the time of submission). Petitioner is advised that the Issue Fee Transmittal Form must be completed and timely submitted to avoid abandonment of the application.*

UNITED STATES PATENT and TRADEMARK OFFICE

COMMISSIONER FOR PATENTS
UNITED STATES PATENT AND TRADEMARK OFFICE
P.O. BOX 1450
ALEXANDRIA, VA 23313-1450
WWW.USPTO.GOV

Mailed: 1-17-07

Attomey Docket No.: 84927AEK

In re Application of Brown et al.
Serial No.: 10/812,692
Filed: March 30, 2004

DECISION ON PETITION UNDER *37 CFR 1.48(a)*

Title: SYNTHESIS FOR POLYCYCLIC AROMOATIC HYDROCARBON COMPOUNDS

This is a decision on the PETITION TO CORRECT INVENTORSHIP IN A NON-PROVISIONAL PATENT APPLICATION filed March 30, 2004 to correct inventorship under 37 CFR 1.48(a) by adding the name of James R. Matz to the list of inventors of the instant application.

It is noted that the applicant has met the requirements of 37 C.F.R. § 1.48(a) by (1) submitting a request to correct the inventorship that sets forth the desired inventorship change; (2) providing a statement from each person being added as an inventor that the error in inventorship occurred without deceptive intention on his or her part; (3) providing a declaration of the actual inventors as required by 37 C.F.R. § 1.63; (4) providing the processing fee set forth in 1.17(i); and, (5) providing the written consent of the assignee.

The request is **GRANTED**.

The application file is being forwarded to the appropriate section of the Patent and Trademark Office for correction of the record.

Glenn A. Caldarola
Supervisory Patent Examiner
Art Unit 1764
Technology Center 1700

Arthur E. Klugel
Patent Legal Staff
Eastman Kodak Company
343 State Street
Rochester NY 14650-2201

UNITED STATES PATENT AND TRADEMARK OFFICE

Commissioner for Patents
United States Patent and Trademark Office
P.O. Box 1450
Alexandria, VA 22313-1450
www.uspto.gov

MYERS BIGEL SIBLEY & SAJOVEC, P.A
PO BOX 37428
RALEIGH NC 27627

COPY MAILED

OCT 14 2008

OFFICE OF PETITIONS

In re Application of:
ASOKAN, Ram
Application No.: 10/812,700
Filed: March 30, 2004
Attorney Docket No.: 9314-70

DECISION APPROVING
WITHDRAWAL OF ATTORNEY

This is a decision on the Request to Withdraw as Attorney/Agent of Record under 37 CFR § 1.36, filed October 2, 2008.

The Request is **APPROVED**.

Debra K. Stephens requests that she alone be withdrawn as an attorney under 37 CFR § 1.36, pursuant to the reason set forth under 37 CFR § 10.40(b)(2), because of her current employment by the United States Patent and Trademark Office. Since the Request satisfies all of the requirements for withdrawal, it is appropriate to approve the Request and withdraw only Ms. Stephens as an attorney of record.

All future communications from the Office will continue to be directed to the above-identified correspondence address.

A courtesy copy of this decision is being mailed to Ms. Stephens at the address identified in the Request.

Telephone inquiries relating to this decision should be directed Brian W. Brown at (571) 272-5338.

Brian W. Brown
Petitions Examiner
Office of Petitions

Cc: Debra K. Stephens
301 Edgemore Avenue
Cary, NC 27519

UNITED STATES PATENT AND TRADEMARK OFFICE

Commissioner for Patents
United States Patent and Trademark Office
P.O. Box 1450
Alexandria, VA 22313-1450
www.uspto.gov

PHILIP H. ALBERT
TOWNSEND AND TOWNSEND AND CREW, LLP
TWO EMBARCADERO CENTER
EIGHTH FLOOR
SAN FRANCISCO, CA 94111-3834

COPY MAILED

MAY 29 2009

OFFICE OF PETITIONS

In re Application of	:	
Pavel Berkhin	:	DECISION ON PETITION
Application No. 10/812,719	:	TO WITHDRAW
Filed: March 29, 2004	:	FROM RECORD
Attorney Docket No. 50269-0690	:	

This is a decision on the Request to Withdraw as attorney or agent of record under 37 C.F.R. § 1.36(b), filed August 29, 2005.

The request is **NOT APPROVED** because it is moot.

A review of the file record indicates that on September 6, 2005 the power of attorney was revoked by the assignee of the patent application. Accordingly, the request to withdraw under 37 C.F.R. § 1.36(b) is moot.

All future communications from the Office will be directed to the below-listed address until otherwise notified by applicant.

Telephone inquires concerning this decision should be directed to the undersigned at 571-272- 7751. All other inquires concerning either the examination or status of the application should be directed to the Technology Center.

Joan Olszewski
Petitions Examiner
Office of Petitions

cc: Hickman, Palermo Truong & Becker
LLP/Yahoo! Inc.
2055 Gateway Place
Suite 550
San Jose CA 95110-1083

UNITED STATES PATENT AND TRADEMARK OFFICE

COMMISSIONER FOR PATENTS
UNITED STATES PATENT AND TRADEMARK OFFICE
P.O. BOX 1450
ALEXANDRIA, VA 22313-1450
www.uspto.gov

MAIL

APR 2 5 2005

DIRECTOR OFFICE
TECHNOLOGY CENTER 2600

Kenneth L. Sherman, Esq.
Myers Dawes Andras & Sherman, LLP
11th Floor
19900 MacArthur Blvd.
Irvine CA 92612

In re Application of :
HOU, JASON S.C. :
Application No. 10/812,721 : DECISION ON PETITION
Filed: March 30, 2004 : TO MAKE SPECIAL
For: **SOUND SYSTEM WITH DEDICATED VOCAL CHANNEL** :

This is a decision on the petition filed March 24, 2005 under Manual of Patent Examination Procedure §708.02, VIII requesting accelerated examination.

The petition under Manual of Patent Examination Procedure §708.02, VIII, must:
(1) be filed prior to receiving any examination by the examiner,
(2) be accompanied by the required fee- $130,
(3) the claims should be directed to a single invention (if it is determined that the claims pertain to more than one invention, then applicant will have to make an election without traverse or forfeit accelerated examination status),
(4) state that a pre-examination search was made, and fully discuss the search method employed, such as classes and subclasses searched, publications, Chemical abstracts, patents, etc. A search made by a foreign patent office satisfies this requirement,
(5) be accompanied by a copy of each of the references most closely related to the subject matter encompassed by the claims if said references are not already of record,
(6) fully discuss the references, pointing out with the particularity required by 37 C.F.R. §1.111 (b) and (c), how the claimed subject matter is patentable over the references.

The petitioner meets all the above-listed requirements. Accordingly, the petition is **GRANTED**.

The application will retain its special status throughout its entire prosecution, including any appeal to the Board of Patent Appeals and Interferences, subject only to diligent prosecution by the applicant. The application file is being forwarded to the examiner for appropriate action in due course.

Kenneth A. Wieder
Special Program Examiner
Technology Center 2600
Communications

UNITED STATES PATENT AND TRADEMARK OFFICE

Commissioner for Patents
United States Patent and Trademark Office
P.O. Box 1450
Alexandria, VA 22313-1450
www.uspto.gov

COPY MAILED
MAR 02 2010

CANTOR COLBURN, LLP
20 CHURCH STREET
22ND FLOOR
HARTFORD CT 06103

In re Application of	:	
Louis GARNEAU	:	
Application No. 10/812,730	:	ON PETITION
Filed: March 29, 2004	:	
Attorney Docket No. GLO0004US	:	

This is a decision on the petition under the unintentional provisions of 37 CFR 1.137(b), filed December 7, 2009, to revive the above-identified application.

The petition is **GRANTED**.

The application became abandoned for failure to timely file a reply within the meaning of 37 CFR 1.113 to the final Office action of March 24, 2009. The proposed reply required for consideration of a petition to revive must be a Notice of Appeal (and appeal fee required by 37 CFR 41.20(b)(2), an amendment that *prima facie* places the application in condition for allowance, a Request for Continued Examination and submission (37 CFR 1.114), or the filing of a continuing application under 37 CFR 1.53(b). See MPEP 711.03(c)(II)(A)(2). A three (3) month extension of time pursuant to the provisions of 37 CFR 1.136(a) was obtained. Accordingly, the date of abandonment of this application is September 25, 2009.

The petition satisfies the requirements of 37 CFR 1.137(b) in that petitioner has supplied (1) the reply in the form of a Request for Continued Examination (RCE) and fee of $405, and the submission required by 37 CFR 1.114; (2) the petition fee of $810; and (3) a proper statement of unintentional delay.

Telephone inquiries concerning this decision should be directed to the undersigned at (571) 272-6735.

This application is being referred to Technology Center AU 3765 for processing of the RCE and for appropriate action by the Examiner in the normal course of business on the amendment submitted in accordance with 37 CFR 1.114.

/DCG/
Diane C. Goodwyn
Petitions Examiner
Office of Petitions

UNITED STATES PATENT AND TRADEMARK OFFICE

Commissioner for Patents
United States Patent and Trademark Office
P.O. Box 1450
Alexandria, VA 22313-1450
www.uspto.gov

MARSHALL, GERSTEIN & BORUN LLP
233 S. WACKER DRIVE, SUITE 6300
SEARS TOWER
CHICAGO IL 60606

COPY MAILED

JUN 0 9 2008

In re Application of	:	
Eryurek et al.	:	
Application No. 10/812, 752	:	DECISION ON PETITION
Filed: March 30, 2004	:	
Attorney Docket No. 30203,37866	:	

This is a decision on the petition, filed May 15, 2008, which is being treated as a petition under 37 CFR 1.181 (no fee) requesting withdrawal of the holding of abandonment in the above-identified application.

The petition is **GRANTED**.

This application was held abandoned for failure to timely pay the issue and publication fees on or before April 3, 2008, as required by the Notice of Allowance and Fee(s) Due (Notice), mailed

Petitioner asserts that the Notice dated January 3, 2008 was not received.

A review of the written record indicates no irregularity in the mailing of the Office action, and, in the absence of any irregularity, there is a strong presumption that the Office action was properly mailed to the practitioner at the address of record. This presumption may be overcome by a showing that the Office action was not in fact received. In this regard, the showing required to establish the failure to receive the Office action must consist of the following:

1. a statement from practitioner stating that the Office action was not received by the practitioner. The statement should also describe the system used for recording an Office action received at the correspondence address of record and establish that the docketing system was sufficiently reliable;

2. a statement from the practitioner attesting to the fact that a search of the file jacket and docket records indicates that the Office action was not received; and

3. a copy of the master docket for the firm docket record where the nonreceived Office action would have been entered had it been received must be attached to and referenced in the practitioner's statement. If no master docket exists, the practitioner should so state and provide other evidence such, as but not limited: to the application

file jacket, incoming mail log; calendar; reminder system or individual docket record for the application in question

See MPEP § 711.03(c) under subheading "Petition to Withdraw Holding of Abandonment Based on Failure to Receive Office Action," and "Withdrawing the Holding of Abandonment When Office Actions Are Not Received," 1156 Official Gazette 53 (November 16, 1993).

The petition satisfies the above-stated requirements. Accordingly, the application was not abandoned in fact.

In view of the above, the Notice of Abandonment is hereby vacated and the holding of abandonment withdrawn.

This application is being referred to the Technology Center AU 2121 technical support staff for **re-mailing** the Notice of Allowability and the Notice of Allowance and Fee(s) Due of . The period for paying the issue and publication fees and submitting corrected drawings will be reset to expire three (3) months from the date the Notices are re-mailed. This period is not extendable under the provisions of 37 CFR 1.136.

Charlema Grant

Charlema Grant
Petitions Attorney
Office of Petitions

UNITED STATES PATENT AND TRADEMARK OFFICE

COMMISSIONER FOR PATENTS
UNITED STATES PATENT AND TRADEMARK OFFICE
P.O. BOX 1450
ALEXANDRIA, VA 22313-1450
www.uspto.gov

Sanders N. Hillis
BRINKS HOFER GILSON & LIONE
Suite 1600
One Indiana Square
Indianapolis, IN 46204

COPY MAILED

JUL 2 8 2004

OFFICE OF PETITIONS

In re Application of :
Adrian Kiermasz, et al. :
Application No. 10/812,824 : DECISION GRANTING PETITION
Filed: March 30, 2004 :
Attorney Docket No. 7103/409 (P1249) :

This is a decision on the communication filed July 9, 2004 requesting that the above-identified application be accorded a filing date of March 30, 2004, instead of the presently accorded date of March 29, 2004. The communication is properly being treated as a petition under 37 CFR 1.10(d).

Petitioners request the later filing date on the basis that the application was purportedly deposited in Express Mail service with the U. S. Postal Service, on March 30, 2004. In support, petitioners provided, inter alia, a copy of the Express Mail label, receipt No. EV425068526, as well as a copy of a copy of a US Postal Service (USPS) record styled "Pickup Service Statement for Express Mail, Global Express Guaranteed, Priority Mail, or Parcel Post" showing that a package bearing Express Mail label No. EV425068526US was picked up by the USPS from counsel's office on "3-30-04". It is noted that the transmittal letter found in the file includes the same Express Mail receipt number, as well as a statement of express mailing under 37 CFR 1.10 dated March 30, 2004. A review of the USPS Track/Confirm system indicates that the Express Mail package in question was enroute March 30, 2004 at 5:55 pm. (see copy attached)

Paragraph (d) of 37 CFR 1.10 states that:

> Any person filing correspondence under this section that was received by the Office and delivered by the "Express Mail Post Office to Addressee" service of the USPS, who can show that the "date-in" on the "Express Mail" mailing label or other official notation entered by the USPS was incorrectly entered or omitted by the USPS, may petition the Commissioner to accord the correspondence a filing date as of the date the correspondence is shown to have been deposited with the USPS, provided that:
>
> (1) The petition is filed promptly after the person becomes aware that the Office has accorded, or will accord, a filing date based upon an incorrect entry by the USPS;
>
> (2) The number of the "Express Mail" mailing label was placed on the paper(s) or fee(s) that constitute the correspondence prior to the original mailing by "Express Mail"; and
>
> (3) The petition includes a showing which establishes, to the satisfaction of the Commissioner, that the requested filing date was the date the correspondence was deposited in "Express Mail Post Office to Addressee" service prior to the last scheduled pickup for that day. Any showing pursuant to this paragraph must be corroborated by

evidence from the USPS or that came into being after deposit and within one business day of the deposit of the correspondence in the "Express Mail Post Office to Addressee" service of the USPS. Any statement submitted in support of such a showing pursuant to this paragraph must be a verified statement if made by a person other than an employee of the USPS or a practitioner as defined in ' 10.1(r) of this chapter.

A grantable petition under 37 CFR 1.10(d) must include "a showing which establishes, to the satisfaction of the Commissioner, that the requested filing date was the date the correspondence was deposited in "Express Mail Post Office to Addressee" service prior to the last scheduled pickup for that day." In addition, the showing "must be corroborated by evidence from the USPS or that came into being after deposit and within one business day of the deposit of the correspondence in the "Express Mail Post Office to Addressee" service of the USPS."

Petitioners' evidence shows that the package in question was accepted on March 30, 2004, not March 29, 2004. As the USPS Pickup Service Statement and, more importantly, the Track/Confirm record corroborates a "date-in" of March 30, 2004, the petition is GRANTED. Under the circumstances, no petition fee is required.

The application is being returned to Initial Patent Examination Division (OIPE) for further processing and correction of the filing date to **March 30, 2004**.

Telephone inquires related to this decision should be directed to the undersigned at (703) 305-9220. Telephone inquiries related to OIPE processing should be directed to their hotline at (703) 308-1202.

Sherry D. Brinkley

Sherry D. Brinkley
Petitions Examiner
Office of Petitions
Office of the Deputy Commissioner
for Patent Examination Policy

Attachment: USPS Track Confirm record

UNITED STATES PATENT AND TRADEMARK OFFICE

Commissioner for Patents
United States Patent and Trademark Office
P.O. Box 1450
Alexandria, VA 22313-1450
www.uspto.gov

PATRICK G. BURNS, ESQ.
GREER, BURNS & CRAIN, LTD.
300 S. WACKER DRIVE, SUITE 2500
CHICAGO, IL 60606

COPY MAILED

APR 29 2008

OFFICE OF PETITIONS

In re Application of	:	
YOSHIDA, et al.	:	
Application No. 10/812,828	:	DECISION GRANTING PETITION
Filed: March 30, 2004	:	UNDER 37 CFR 1.313(c)(2)
Attorney Docket No.**1324.70220**	:	

This is a decision on the petition under 37 CFR 1.313(c)(2), filed April 25, 2008, to withdraw the above-identified application from issue after payment of the issue fee.

The petition is **GRANTED.**

The above-identified application is withdrawn from issue for consideration of a submission under 37 CFR 1.114 (request for continued examination). *See* 37 CFR 1.313(c)(2).

Petitioner is advised that the issue fee paid on November 2, 2007 cannot be refunded. If, however, this application is again allowed, petitioner may request that it be applied towards the issue fee required by the new Notice of Allowance.[1]

There is no indication that the person signing the petition was ever given a power of attorney or authorization of agent to prosecute the above-identified application. However, the signature of Mr. Joseph P. Fox appearing on the petition shall constitute a representation to the United States Patent and Trademark Office that he is authorized to represent the particular party on whose behalf he acts in accordance with 37 CFR 1.34(a).

Telephone inquiries should be directed to Monica A. Graves at (571) 272-7253.

This application is being referred to Technology Center AU 2871 for processing of the request for continued examination under 37 CFR 1.114 and for consideration of the concurrently filed information disclosure statement.

Monica A. Graves
Petitions Examiner
Office of Petitions

---

[1] *The request to apply the issue fee to the new Notice may be satisfied by completing and returning the new Part B – Fee(s) Transmittal Form (along with any balance due at the time of submission). Petitioner is advised that the Issue Fee Transmittal Form* ***must*** *be completed and timely submitted to avoid abandonment of the application.*

UNITED STATES PATENT AND TRADEMARK OFFICE

COMMISSIONER FOR PATENTS
UNITED STATES PATENT AND TRADEMARK OFFICE
P.O. BOX 1450
ALEXANDRIA, VA 22313-1450
www.uspto.gov

James H. Morris
Wolf, Greenfield & Sacks, P.C.
Federal Reserve Plaza
600 Atlantic Avenue
Boston MA 02210

COPY MAILED
AUG 18 2005
OFFICE OF PETITIONS

Applicant: Moreau
Appl. No.: 10/812,843
Filing Date: March 30, 2004
Title: CRT VERTICAL SCANNING CIRCUIT WITH A LOW POWER STANDBY
Attorney Docket No.: S1022.81042US01
Pub. No.: US 2004/0257008 A1
Pub. Date: December 23, 2004

This is a decision on the request for corrected of patent application publication under 37 CFR 1.221(b), filed on January 11, 2005, for the above-identified application

The request is DISMISSED.

Applicant requests that the application be republished because the patent application publication contains a material error wherein the phrase "the largest zone being the collector CS of transitor T5. Collectors C5, C6 and C7 are separated by N-type zones" is misprinted as "the largest zone being the collector CS of transitor T5. Collectors C5, C6 and C7 are separated by N-type zones" in the description of Figure 4.

37 CFR 1.221 (b) is applicable "only when the Office makes a material mistake which is apparent from Office records." A material mistake must affect the public's ability to appreciate the technical disclosure of the patent application publication, to determine the scope of the patent application publication, or to determine the scope of the provisional rights that an applicant may seek to enforce upon issuance of a patent. [1]

The error noted by requestor wherein the phrase "the largest zone being the collector CS of transitor T5" is an Office error but the mistake is a minor typographical error, which is clearly understandable to one of ordinary skill in reading the specification and the claims. The mistake is a minor typographical error, which is clearly understandable from reading the specification and referring to the drawing in which the phrase is used, as terms are not read in a vacuum. The mistake does not affect the public's ability to appreciate the technical disclosure of the patent application publication, or determine the scope of the patent application publication or determine

[1] Changes to Implement Eighteen-Month Publication of Patent Applications, 65 FR 57023, 57038 (Sept. 20, 2000), 1239, Off. Gaz. Pat. Office Notices 63, 75 (Oct 10, 2000) (final rule).

the scope of the provisional rights that an applicant may seek to enforce upon issuance of a patent.

Furthermore, this is a not material error since the Image File Wrapper (IFW) for this application is available to the public, as of its publication date.

The applicant is advised that a "request for republication of an application previously published" may be filed under 37 CFR 1.221 (a). Such a request for republication "must include a copy of the application compliance with the Office's electronic filing system requirements and be accompanied by the publication fee set forth in § 1.18 (d) and the processing fee set forth in § 1.17 (i)." If the request for republication does not comply with the electronic filing system requirements, the republication will not take place and the publication fee set forth in § 1.18 (d) will be refunded. The processing fee will be retained.

Any request for republication under 37 CFR 1.221(a), must be submitted via the EFS system and questions or request for reconsideration of the decision, should be addressed as follows:

By mail to: Mail Stop PGPUB
Commissioner for Patents
P.O. Box 1450
Alexandria, Va. 22313-1450

By facsimile: 571-273-8300

Inquiries relating to this matter may be directed to Mark Polutta at (571) 272-7709 (voice).

Mark Polutta
Senior Legal Advisor
Office of Patent Legal Administration
Office of the Deputy Commissioner
for Patent Examination Policy

UNITED STATES DEPARTMENT OF COMMERCE
Patent and Trademark Office
ASSISTANT SECRETARY OF COMMERCE AND
COMMISSIONER OF PATENTS AND TRADEMARKS
Washington, DC 20231

1/16/08

Patent No. : 7023149
Inventor(s) : Moreau
Issued : 4/4/06
Title : CRT VERTICAL SCANNING CIRCUIT WITH A LOW POWER STANDBY
Atty.doc./File No.

Request for Certificates of Correction

Consideration has been given to your request for the issuance of a Certificate of Correction, for the above – identified patent under the provisions of CFR 1.322.

Inspection of the application for the patent reveals that item [63], is printed in accordance with the record. Therefore being no fault on the Patent and Trademark Office, It has no authority to issue a certificate of correction under the provision of 1.322.

In view of the forgoing, your request in this matter, is hereby denied.

Future written correspondence concerning this matter should be filed and directed to Decisions & Certificates of Correction Branch.

Henry Randall
Cecelia Newman
Decisions & Certificates
of Correction Branch
(703) 308-9390 Ext. 108

WOLF,GREENFIELD & SACKS, P.C.
FEDERAL RESERVE PLAZA
600 ATLANTIC AVENUE
BOSTON, MA 02210

HR/CBN

UNITED STATES PATENT AND TRADEMARK OFFICE

Commissioner for Patents
United States Patent and Trademark Office
P.O. Box 1450
Alexandria, VA 22313-1450
www.uspto.gov

MACMILLAN SOBANSKI & TODD, LLC
ONE MARITIME PLAZA FOURTH FLOOR
720 WATER STREET
TOLEDO OH 43604-1619

COPY MAILED

SEP 21 2004

OFFICE OF PETITIONS

In re Application of :
Brian Boyle :
Application No. 10/812,844 : ON PETITION
Filed: March 30, 2004 :
Attorney Docket No.: 1-24766 :

This is a decision on the petition filed August 16, 2004, requesting in effect, that a Notice to File Missing Parts in a Nonprovisional Application ("Notice") mailed June 16, 2004, be withdrawn.

The application was filed on March 30, 2004. However, on June 14, 2004, the Office of Initial Patent Examination (OIPE) mailed a Notice stating that the application had been accorded a filing date of March 30, 2004 but figure 16 as described in the specification appeared to have been omitted.

In response, the present petition was filed wherein Petitioner contends figure 16 as described in the specification were filed on March 30, 2004. In support, petitioner has provided a copy of page 7 of the drawings which contains figure 16.

On September 10, 2004 OIPE mailed a Notice withdrawing the Notice to File Missing Parts which was mailed on June 14, 2004.

Accordingly, the Petition is **dismissed as moot**. The $130.00 petition fee has been refunded.

Since figure 16 as described in the specification have been located in the File and the Notice of Missing Parts has been withdrawn the application retains the filing date of March 30, 2004.

The application will be returned to the Office of Initial Patent Examination for further processing with a filing date of March 30, 2004, using 9 sheets of drawings including figure 16 as submitted with the original disclosure on March 30, 2004.

Telephone inquiries related to this decision may be directed to the undersigned at (703) 306-0251.

Charlema R. Grant
Petition Attorney
Office of Petitions

UNITED STATES PATENT AND TRADEMARK OFFICE

UNITED STATES DEPARTMENT OF COMMERCE
United States Patent and Trademark Office
Address: COMMISSIONER FOR PATENTS
P.O. Box 1450
Alexandria, Virginia 22313-1450
www.uspto.gov

MARSHALL, GERSTEIN & BORUN LLP
233 SOUTH WACKER DRIVE
6300 WILLIS TOWER
CHICAGO, IL 60606-6357

Mail Date: 04/21/2010

Applicant	: Todd Zankel	: DECISION ON REQUEST FOR
Patent Number	: 7569544	: RECALCULATION of PATENT
Issue Date	: 08/04/2009	: TERM ADJUSTMENT IN VIEW
Appliction No	: 10/812,849	: OF WYETH AND NOTICE OF INTENT TO
Filed	: 03/30/2004	: ISSUE CERTIFICATE OF CORRECTION
		:

The Request for Recalculation is **GRANTED** to the extent indicated.

The patent term adjustment has been determined to be **251** days. The USPTO will *sua sponte* issue a certificate of correction reflecting the amount of PTA days determined by the recalculation.

Prior to the issuance of the certificate of correction, the USPTO will afford patentee an opportunity to be heard and request reconsideration. Accordingly, patentee has **one month or thirty (30) days**, whichever is longer, to file a request for reconsideration of this patent term adjustment calculation. See 35 U.S.C. 154(b)(3)(B)(ii) and 37 CFR 1.322(a)(4). No extensions of time will be granted under 37 CFR 1.136.

Patentee should use document code PET.OP if electronically filing a request for reconsideration of this patent term adjustment calculation. The patentee must also include the information required by 37 CFR 1.705(b)(2) and the fee required by 37 CFR 1.18(e). If patentee does not file a timely request for reconsideration of this patent term adjustment calculation including the information required by 37 CFR 1.705(b)(2) and the fee required by 37 CFR 1.18(e), the USPTO will issue a certificate of correction reflecting the PTA determination noted above.

Patentee should be aware that in order to preserve the right to review in the United States District Court for the District of Columbia of the USPTO patent term adjustment determination, patentee must ensure that he or she also take the steps required under 35 U.S.C. 154(b)(4)(A) in a timely manner. Nothing in the request for recalculation should be construed as providing an alternative time frame for commencing a civil action under 35 U.S.C. 154(b)(4)(A).

Any questions concerning this decision should be directed to the Office of Patent Legal Administration at 571-272-7702.

UNITED STATES PATENT AND TRADEMARK OFFICE

Commissioner for Patents
United States Patent and Trademark Office
P.O. Box 1450
Alexandria, VA 22313-1450
www.uspto.gov
DIW 11-04

ANTONELLI, TERRY, STOUT & KRAUS, LLP
1300 NORTH SEVENTEENTH STREET
SUITE 1800
ARLINGTON VA 22209-9889

COPY MAILED

NOV 0 1 2004

OFFICE OF PETITIONS

In re Application of	:
Wada, Oroku, and Maki	:
Application No. 10/812,869	: DECISION ACCORDING STATUS
Filed: 31 March, 2004	: UNDER 37 CFR 1.47(a)
Attorney Docket No. 501.43640X00	:

This is in response to the petition filed under 37 CFR 1.47(a) on 14 September, 2004.

The petition is **GRANTED**.

The above-identified application was filed on 31 March, 2004, without an executed oath or declaration.

Accordingly, on 14 June, 2004, Initial Patent Examination Division mailed a Notice to File Missing Parts of Nonprovisional Application, requiring an executed oath or declaration and a surcharge for its late filing.

In response, on 14 September, 2004, the present petition was filed, along with a one (1) month extension of time and a declaration naming Takashi Wada, Noriyuki Oroku, and Hiroshi Maki as joint inventors and signed by joint inventors Oroku and Maki on behalf of themselves and non-signing joint inventor Wada.

Petitioners have shown that the non-signing inventor cannot be found. Specifically, petitioners have shown, via the declaration of Yoshitsugu Harada, that a copy of the application was sent to non-signing joint inventor Wada at his last known address and at his parents' address. Petitioners have enclosed copies of the envelopes showing that the applications were returned as undeliverable by the Japan post office. Accordingly, despite diligent efforts, the non-signing inventor could not be located.

This application and papers have been reviewed and found in compliance with 37 CFR 1.47(a). This application is hereby accorded Rule 1.47(a) status.

As provided in Rule 1.47(c), this Office will forward notice of this application's filing to the non-signing inventor at the address given in the petition, not the declaration. Notice of the filing of this application will also be published in the Official Gazette.

The application is being referred to Technology Center 2800 for examination in due course.

Telephone inquiries related to this decision should be directed to the undersigned at 571-272-3231.

D Wood

Douglas I. Wood
Senior Petitions Attorney
Office of Petitions

UNITED STATES PATENT AND TRADEMARK OFFICE

Commissioner for Patents
United States Patent and Trademark Office
P.O. Box 1450
Alexandria, VA 22313-1450
www.uspto.gov

REED SMITH LLP
3110 Fairview Park Drive
Suite 1400
Falls Church, Virginia 22042

MAILED

DEC 1 5 2005

Technology Center 2100

In re Application of:
YAMAZAKI et al
Application No. 10/812,893
Filed: March 31, 2004
For: DISK ARRAY APPARATUS AND DISK ARRAY APPARATUS CONTROLLING METHOD

DECISION ON PETITION TO MAKE SPECIAL

This is a decision on the petition, filed on July 11, 2005 under 37 C.F.R. §102(d) and M.P.E.P. § 708.02(VIII): Accelerated Examination, to make the above-identified application special.

The petition is **GRANTED**.

M.P.E.P. § 708.02, Section VIII which sets out the prerequisites for a grantable petition for Accelerated Examination under 37 C.F.R. § 102(d) states in relevant part:

> A new application (one which has not received any examination by the examiner) may be granted special status provided that applicant (and this term includes applicant's attorney or agent) complies with each of the following items:
>
> (A) Submits a petition to make special accompanied by the fee set forth in 37 CFR § 1.17(h);
>
> (B) Presents all claims directed to a single invention, or if the Office determines that all the claims presented are not obviously directed to a single invention, will make an election without traverse as a prerequisite to the grant of special status;
>
> (C) Submits a statement(s) that a pre-examination search was made, listing the field of search by class and subclass, publication, Chemical Abstracts, foreign patents, etc. A search made by a foreign patent office satisfies this requirement;
>
> (D) Submits one copy each of the references deemed most closely related to the subject matter encompassed by the claims if said references are not already of record; and

(E) Submits a detailed discussion of the references, which discussion points out, with the particularity required by 37 CFR §§ 1.111 (b) and (c), how the claimed subject matter is patentable over the references.

Applicant's submission of July 11, 2005 meets all the criteria set out above.

Accordingly, the petition is **GRANTED**. The application is being forwarded to the examiner for accelerated examination in accordance with M.P.E.P. § 708.02. If the application is subsequently allowed, it will be given priority for printing. See M.P.E.P. § 1309.

Vincent N. Trans
Special Program Examiner
Technology Center 2100
Computer Architecture, Software, and
Information Security
571-272-3613

UNITED STATES PATENT AND TRADEMARK OFFICE

Commissioner for Patents
United States Patent and Trademark Office
P.O. Box 1450
Alexandria, VA 22313-1450
www.uspto.gov

MAR 10 2005

MAILED

MAR 10 2005

OFFICE OF THE DIRECTOR
TC 3600

KILPATRICK STOCKTON LLP
607 14TH STREET, N.W.
WASHINGTON, DC 20005

In re application of	:	**DECISION ON PETITION**
Craig Farr	:	**TO MAKE SPECIAL**
Application No. 10/812,902	:	**(ACCELERATED**
Filed: March 31, 2004	:	**EXAMINATION)**
For: METHOD AND SYSTEM FOR PROVIDING DIVIDEND ENHANCED CONVERTIBLE STOCKS WITH ACCELERATION TRIGGERS		

This is in response to the petition filed on February 01, 2005 to make the above-identified application special on the basis of special examining procedure for certain new applications - accelerated examination as set forth in MPEP § 708.02 VIII.

The requirements for granting special status under this section are: (A) a petition to make special accompanied by the fee set forth in 37 CFR 1.17(i); (B) all claims being directed to a single invention, or an election without traverse if the Office determines that all the claims are not directed to a single invention; (C) a statement that a pre-examination search was made listing the field of search; (D) one copy of each of the references deemed most closely related to the subject matter encompassed by the claims if said references are not already of record; and (E) a detailed discussion of how the claimed subject matter is patentable over the references in accordance with 37 CFR 1.111 (b) and (c).

Since all of the requirements for special status under MPEP § 708.02 VIII have been met, the petition is **GRANTED**.

The examiner is directed (1) to make an interference search for possible interfering applications, (2) to promptly examine this application out of turn, and (3) if any interfering application is discovered, to examine such application simultaneously and state in the first official letter of such application that it is being taken out of turn because of a possible interference.

Petitioner is advised that this application will continue to be special, throughout its entire prosecution and pendency, including interference or appeal, if any, only if petitioner makes a prompt ***bona fide*** effort, in response to each Office action, to place the application in condition for allowance, even if it is necessary to conduct an interview with the examiner to accomplish this purpose.

SUMMARY: Petition to Make Special **GRANTED.**

Kenneth J. Dorner
Special Programs Examiner
Technology Center 3600
(703) 308-0866

KJD/slb: 02/17/05

UNITED STATES PATENT AND TRADEMARK OFFICE

COMMISSIONER FOR PATENTS
UNITED STATES PATENT AND TRADEMARK OFFICE
P.O. BOX 1450
ALEXANDRIA, VA 22313-1450
www.uspto.gov

MAIL

JAN 25 2005

DIRECTOR OFFICE
TECHNOLOGY CENTER 2600

YOUNG & THOMPSON
745 SOUTH 23RD STREET
2ND FLOOR
ARLINGTON VA 22202

In re Application of :
Alan STILLMAN :
Application No. 10/812,909 :
Filed: March 31, 2004 :
For: **METHOD AND APPARATUS FOR COMMUNICATING USING PICTOGRAMS** :

DECISION ON PETITION TO MAKE SPECIAL

This is a decision on the petition filed November 1, 2004, under 37 CFR §1.102(d) to make the application special and treated as pursuant to MPEP §708.02, section II (Infringement),.

A grantable petition under 37 CFR §1.102(d) and MPEP §708.02, section II (Infringement), must be accompanied by the required fee and a statement alleging:

(1) that there is an infringing device or product actually on the market or method in use;
(2) that a rigid comparison of the alleged infringing device, product, or method with the claims of the application has been made, and that, in his or her opinion, some of the claims are unquestionably infringed; and
(3) that he or she has made or caused to be made a careful and thorough search of the prior art or has a good knowledge of the pertinent prior art. Further, Applicant must provide a copy of each of the references deemed most closely related to the subject matter encompassed by the claims if the references are not already of record.

The petitioner meets all the above-listed requirements. Accordingly, the petition is **GRANTED**.

The application will retain its special status throughout its entire prosecution, including any appeal to the Board of Patent Appeals and Interferences, subject only to diligent prosecution by the applicant.

The application is being forwarded to the examiner for expedited prosecution.

Kenneth A. Wieder
Special Program Examiner
Technology Center 2600
Communications

UNITED STATES PATENT AND TRADEMARK OFFICE

Commissioner for Patents
United States Patent and Trademark Office
P.O. Box 1450
Alexandria, VA 22313-1450
www.uspto.gov

NIXON & VANDERHYE, PC
901 NORTH GLEBE ROAD, 11TH FLOOR
ARLINGTON VA 22203

In re Application of	:	
Begg, Michael Colin	:	
Appl. No.: 10/812,917	:	DECISION ON PETITION
Filed: Mar. 31, 2004	:	
For: MANUFACTURE OF SHIM WINDINGS	:	

This is a decision on the petition filed on May 16, 2008 by which petitioner request withdrawal of the finality of the Office action dated May 12, 2008. The petition is considered pursuant to 37 CFR 1.181 and no fee is required.

The petition is granted.

In the petition, petitioner argues that in response to the Appeal Brief filed on Feb. 6, 2008, the examiner re-opened prosecution by issuing a final rejection with new grounds on May 12, 2008, which was not necessitated by any amendment. In particular, petitioner argues that the last amendment was presented pursuant to 37 C.F.R. § 1.116 on May 15, 2007 which amendment was only to claim 7 for the purpose of obviating a ground of formality-based objection made in the final Office Action dated Feb. 15, 2007. In essence, petitioner argues that the second final rejection of May 12, 2008 was not necessitated by any amendment to the claims and only necessitated by the appeal brief of Feb. 6. 2008.

While the examiner states that new grounds of rejection were necessitated by amendment filed on Aug. 3, 2006, it is noted that certain grounds of rejection with respect to the applied references remain the same, i.e., the combination of Heke '214 and AAPA, as in the non-final rejection mailed Feb. 14, 2006. However, the application of new references, US Pat. 6,175,237 to Doty and U.S. Pat. 6,615,481 to LaPlante, in the latest final rejection of May 12, 2008, clearly indicates that the references were necessitated by the appeal brief rather than previously amendment.

In finding petitioner's points of argument persuasive, the requested relief is granted. The finality of the last Office action mailed May 12, 2008 is hereby withdrawn and the period to respond remains unchanged. The examiner has been directed to treat the next applicant's response to the Office action of May 12, 2008 as 37 CFR § 1.111 amendment.

This application is being returned to the SPE of Art Unit 3729 waiting for applicant's response to the last Office action. Should petitioner have any further questions, he is invited to contact Henry Yuen, Special Programs Examiner, at (571) 272-4856.

PETITION GRANTED.

Frederick R. Schmidt, Director
Technology Center 3700

UNITED STATES PATENT AND TRADEMARK OFFICE

Commissioner for Patents
United States Patent and Trademark Office
P.O. Box 1450
Alexandria, VA 22313-1450
www.uspto.gov

NIXON & VANDERHYE, PC
901 NORTH GLEBE ROAD, 11TH FLOOR
ARLINGTON VA 22203

In re Application of:
BEGG, MICHAEL COLIN
Serial No.: 10/812,917
Filed: Mar. 31, 2004
Docket: 34-125
Title: MANUFACTURE OF SHIM WINDINGS

DECISION ON PETITION

This is a decision on the petition filed on Sep. 11, 2008 by which petitioner requests reconsideration and withdrawal of the restriction requirement mailed Apr. 5, 2006, and that non-elected claims 5, 6 and 8-10 be rejoined, if generic claims 1 and 6 are determined to be allowable. Claims 1-4 and 6-7 were elected for prosecution. Non-elected claims 5 and 8-10 stand withdrawn from consideration. This petition is being considered pursuant to 37 CFR 1.144 and 37 CFR 1.181, and no fee is required.

The petition is **GRANTED IN PART**.

A review of the record reveals that in response to the amendment of Aug. 3, 2006, a second restriction requirement, mailed on Oct. 13, 2006, was made between two disclosed and claimed related inventions: I) Claims 5 and 10, drawn to a product of an MRI shim coil, classified in class 336, subclass 200; and II) Claims 1 through 4 and 6 through 9, drawn to a process of making an MRI shim coil, classified in class 29, subclass 602.1. In the restriction requirement, additionally, an election of species was required among the Species A, B and C. On Nov. 13, 2006, the applicant elected, with traverse, the Group II invention and Species A which is directed to claims 1-4 and 6-7 for examination. Since the second restriction requirement is same as the first restriction requirement mailed on Apr. 5, 2006, then, this petition will only address the later restriction requirement of Oct. 13, 2006.

In judging the propriety of the restriction requirement, the related inventions, as claimed, must be shown to be distinct. See MPEP 802.01. The inventions can be shown to be distinct if either or both of the following can be shown: (1) the process as claimed can be used to make another and

materially different product or (2) the product as claimed can be made by another and materially different process. See MPEP 806.05(f)[1].

In the instant application, the distinctness between the claimed inventions was justified in that the product as claimed can be made by another and materially different process, such as one the forms the required coil pattern by deposition and coating techniques, e.g. plating, CVD, etc., as opposed to cutting or punching of conductive material, as required by Group II.

On Nov. 13, 2006, the applicant traversed the rationale set forth above by basically arguing that the claimed product in claims 5 and 10 as manufactured by the methodology of the independent claim 1 cannot be made by a materially different process as alleged by the examiner , e.g., by a deposition and/or coating technique. The applicant is essentially saying that the examiner has not met the required burden of demonstrating that the product as claimed can be made by another materially different process. The applicant also stated that there would be no distinction between the method of making claims and the product claims. In the current petition, petitioner also argues the product of the process claims 5 and 10 can only be made by the claimed process of the respective parent claims 1 and 6. In the Office action of Feb. 15, 2007, the examiner rebutted these arguments by stating that the final structure of the product by process claims in Group I is not limited to the process steps recited in Group II because product by process claims are not limited to the manipulations of the recited steps in accordance with MPEP § 2113.

The examiner only has to show one-way distinction in accordance with MPEP § 806.05(f). As pointed out by the examiner the product as claimed can be made by another and materially different process, such as by deposition and coating techniques, e.g. plating, CVD, etc., as opposed to cutting or punching of conductive material, as required by Group II. Other alternative methods are possible as well, for example, extruding the metal and forming into a coil during the extrusion process. Further formulating in any of the above suggested processes can be enhanced by machining such as grinding or stretching and compression techniques. For applicant to state unequivocally that the claimed method is unique and that desired properties are provided that cannot be duplicated within the claimed product by other methods would appear unlikely particularly when no unique properties are seen or have been claimed that cannot be duplicated by other methods. Cutting and punching, per se, are not unique operations by themselves and certainly if some unique property is caused in the forming of the shim coil that other methods cannot duplicate, none is seen presently, and again, none is claimed.

---

[1] MPEP § 806.05(f) [R-5] Process of Making and Product Made A process of making and a product made by the process can be shown to be distinct inventions if either or both of the following can be shown: (A) that the process as claimed is not an obvious process of making the product and the process as claimed can be used to make another materially different product; or (B) that the product as claimed can be made by another materially different process. Allegations of different processes or products need not be documented. A product defined by the process by which it can be made is still a product claim (In re Bridgeford, 357 F.2d 679, 149 USPQ 55 (CCPA 1966)) and can be restricted from the process if the examiner can demonstrate that the product as claimed can be made by another materially different process; defining the product in terms of a process by which it is made is nothing more than a permissible technique that applicant may use to define the invention. If applicant convincingly traverses the requirement, the burden shifts to the examiner to document a viable alternative process or product, or withdraw the requirement.

In addition, the examiner required an election of species between the embodiments represented by Species A, B and C (claims 7, 8 and 9, respectively). In this regard, petitioner correctly points out that if the generic claim 6 is found allowable, then, dependent claims 8 and 9 would be rejoined and also allowable (see last paragraph of page 3 of the Office action of Oct. 13, 2006). With regard to the non-elected product by process claims 5 and 10, they will not be rejoined because the are found to be independent or distinct from the process claims 1 and 6 in accordance with MPEP 806.5 (f).

Conclusion

For the reasons outlined above, the restriction requirement promulgated on Oct. 13, 2006 is in accordance with proper Office procedure. Therefore, the examiner's restriction requirement is proper. The requested relief to withdraw the restriction requirement under MPEP 806.05(f) will not be granted. The requested relief for rejoinder of non-elected claims 8 and 9 upon the allowance of the generic claim 6 is granted.

The application is being forwarded to Supervisory Patent Examiner of Art Unit 3729 for further consideration of amendment filed on Sep. 11, 2008. Any request for reconsideration of this decision must be submitted within TWO (2) MONTHS from the mail date of this decision, 37 CFR 1.181(f). No extension of time under 37 CFR 1.136(a) is permitted. The reconsideration request should include a cover letter entitled "Renewed Petition under 37 CFR 1.181". Any inquiry regarding this decision should be directed to Henry C. Yuen, Special Programs Examiner, at (571) 272-4856.

Accordingly, the petition is GRANTED IN PART.

Frederick R. Schmidt, Director
Technology Center 3700

UNITED STATES PATENT AND TRADEMARK OFFICE

Commissioner for Patents
United States Patent and Trademark Office
P.O. Box 1450
Alexandria, VA 22313-1450
www.uspto.gov

BACON & THOMAS, PLLC
625 SLATERS LANE
FOURTH FLOOR
ALEXANDRIA, VA 22314

COPY MAILED

NOV 1 5 2004

OFFICE OF PETITIONS

In re Application of
Jen-Ho Kang
Application No. 10/812,931
Filed: March 31, 2004
Attorney Docket No. KANG3013/EM

NOTICE

This is a notice regarding your request for acceptance of a fee deficiency submission under 37 CFR 1.28. On September 1, 1998, the Court of Appeals for the Federal Circuit held that 37 CFR 1.28(c) is the sole provision governing the time for correction of the erroneous payment of the issue fee as a small entity. **See DH Technology v. Synergystex International, Inc. 154 F.3d 1333, 47 USPQ2d 1865 (Fed. Cir. Sept. 1, 1998).**

The Office no longer investigates or rejects original or reissue applications under 37 CFR 1.56. **1098 Off. Gaz. Pat. Office 502 (January 3, 1989)**. Therefore, nothing in this Notice is intended to imply that an investigation was done.

Your fee deficiency submission under 37 CFR 1.28 is hereby **ACCEPTED**.

Inquiries related to this communication should be directed to the Office of Petitions Staff at (571) 272-3201.

This file is being forwarded to Technology Center 1754 for examination in due course.

Sherry D. Brinkley
Petitions Examiner
Office of Petitions
Office of the Deputy Commissioner
for Patent Examination Policy

UNITED STATES PATENT AND TRADEMARK OFFICE

Commissioner for Patents
United States Patent and Trademark Office
P.O. Box 1450
Alexandria, VA 22313-1450
www.uspto.gov

MCGINN INTELLECTUAL PROPERTY LAW GROUP, PLLC
8321 OLD COURTHOUSE ROAD
SUITE 200
VIENNA VA 22182-3817

COPY MAILED

FEB 15 2006

OFFICE OF PETITIONS

In re Application of	:	
Ueda, Osamu	:	
Application No. 10/812,932	:	ON PETITION
Filed: March 31, 2004	:	
Attorney Docket No. C14-170999M/TRK	:	

This is a decision on the petition under 37 C.F.R. § 1.137(b), filed February 8, 2006, to revive the above-identified application.

The petition is **GRANTED.**

The petition satisfies the conditions for revival pursuant to the provisions of 37 CFR 1.137(b) in that (1) the reply in the form of the Issue Fee Transmittal with payment of the issue and publication fees; (2) the petition fee; and (3) the required statement of unintentional delay have been received. Accordingly, the response has been accepted as having been unintentionally delayed.

This matter is being referred to the Publishing Division for processing into a patent.

Telephone inquiries regarding this decision should be directed to the undersigned at (571) 272-3282.

Liana Chase
Petitions Examiner
Office of Petitions

SPE RESPONSE FOR CERTIFICATE OF CORRECTION

DATE : 3/24/09 Paper No.: _____

TO SPE OF : ART UNIT 2167

SUBJECT : Request for Certificate of Correction for Appl. No.: 10812944 Patent No.: 7496598

Please respond to this request for a certificate of correction within 7 days.

FOR IFW FILES:

Please review the requested changes/corrections as shown in the **COCIN** document(s) in the IFW application image. No new matter should be introduced, nor should the scope or meaning of the claims be changed.

Please complete the response (see below) and forward the completed response to scanning using document code **COCX**.

FOR PAPER FILES:

Please review the requested changes/corrections as shown in the attached certificate of correction. Please complete this form (see below) and forward it with the file to:

Certificates of Correction Branch (CofC)
South Tower - 9A22
Palm Location 7580

Valerie Jackson
Certificates of Correction Branch
703-308-9390 ext. 114

Thank You For Your Assistance

The request for issuing the above-identified correction(s) is hereby:
Note your decision on the appropriate box.

- ☑ **Approved** — All changes apply.
- ☐ **Approved in Part** — Specify below which changes do not apply.
- ☐ **Denied** — State the reasons for denial below.

Comments: The DISQ dated 9/9/2005 was scanned into the wrong application.

JOHN COTTINGHAM
SUPERVISORY PATENT EXAMINER
TECHNOLOGY CENTER 2100

SPE

2167
Art Unit

PTOL-306 (REV. 7/03)

U.S. DEPARTMENT OF COMMERCE Patent and Trademark Office

UNITED STATES PATENT AND TRADEMARK OFFICE

Commissioner for Patents
United States Patent and Trademark Office
P.O. Box 1450
Alexandria, VA 22313-1450
www.uspto.gov

OBLON, SPIVAK, MCCLELLAND, MAIER & NEUSTADT, P.C.
1940 DUKE STREET
ALEXANDRIA VA 22314

COPY MAILED
JUL 14 2006
OFFICE OF PETITIONS

In re Application of :
Yoshida :
Application No. 10/812,947 : ON PETITION
Filed: March 31, 2004 :
Attorney Docket No. 257079US8 :

This is a decision on the petition under 37 CFR §1.181(a) to withdraw the holding of abandonment, filed June 20, 2006.

The petition to withdraw the holding of abandonment is **GRANTED**.

This application became abandoned for failure to timely submit a response to the non-final Office Action mailed August 26, 2005. The Notice set an extendable 3 month period for reply. No extensions of time pursuant to 37 CFR 1.136(a) were obtained. Accordingly, this application was held abandoned on November 27, 2005. A Notice of Abandonment was mailed on April 20, 2006.

Petitioner asserts that the non-final Office Action mailed on August 26, 2005 was never received. A review of the record indicates the non-final Office Action was mailed to an incorrect correspondence address. Petitioner submitted a Power of Attorney, change of correspondence address and statement under 37 CFR 3.73(b) on September 30, 2004. A review of the record shows that a copy of the change of correspondence address was received but not entered. Thus, the non-final Office Action was improperly mailed.

This application is being forwarded to Art Unit 2822 for re-mailing of the non-final Office Action to the current correspondence address of record. The non-final Office Action extendable period for reply will start upon the re-mailing of the Office Action.

Telephone inquiries concerning this matter should be directed to the undersigned at (571) 272-3215.

Charlema R. Grant
Petitions Attorney
Office of Petitions

UNITED STATES PATENT AND TRADEMARK OFFICE

Commissioner for Patents
United States Patent and Trademark Office
P.O. Box 1450
Alexandria, VA 22313-1450
www.uspto.gov

COPY MAILED
NOV 28 2006
OFFICE OF PETITIONS

EDWARD W. BULCHIS, ESQ.
DORSEY & WHITNEY LLP
SUITE 3400
1420 FIFTH AVENUE
SEATTLE WA 98101

In re Application of	:	
Joseph M. Jeddeloh	:	
Application No. 10/812,950	:	ON PETITION
Filed: March 29, 2004	:	
Attorney Docket No. 33582/US	:	

This is a decision on the petition, filed November 27, 2006, under 37 CFR 1.313(c)(2) to withdraw the above-identified application from issue after payment of the issue fee.

The petition is **GRANTED**.

The above-identified application is withdrawn from issue for consideration of a submission under 37 CFR 1.114 (request for continued examination). See 37 CFR 1.313(c)(2).

Petitioner is advised that the issue fee paid on March 6, 2006 in the above-identified application cannot be refunded. If, however, the above-identified application is again allowed, petitioner may request that it be applied towards the issue fee required by the new Notice of Allowance.[1]

Telephone inquiries should be directed to the undersigned at (571) 272-3208.

The examiner of Technology Center AU 2181 will consider the request for continued examination under 37 CFR 1.114.

Karen Creasy
Petitions Examiner
Office of Petitions

---

[1] The request to apply the issue fee to the new Notice may be satisfied by completing and returning the new Issue Fee Transmittal Form PTOL-85(b), which includes the following language thereon: "Commissioner for Patents is requested to apply the Issue Fee and Publication Fee (if any) or re-apply any previously paid issue fee to the application identified above." Petitioner is advised that, whether a fee is indicated as being due or not, the Issue Fee Transmittal Form **must** be completed and timely submitted to avoid abandonment. Note the language in bold text on the first page of the Notice of Allowance and Fee(s) Due (PTOL-85).

SPE RESPONSE FOR CERTIFICATE OF CORRECTION

Paper No.: _____

DATE : 06/27/07

TO SPE OF : ART UNIT 2877

SUBJECT : Request for Certificate of Correction for Appl. No.: 10/812977 Patent No.: 7153616

Please respond to this request for a certificate of correction within 7 days.

Please review the requested changes/corrections as shown in the **COCIN** document(s) in the IFW application image. No new matter should be introduced, nor should the scope or meaning of the claims be changed.

Please complete the response (see below) and forward the completed response to scanning using document code **COCX**.

A. Green

Angela Green
Certificates of Correction Branch
703.308.9380 ext. 123

Thank You For Your Assistance

The request for issuing the above-identified correction(s) is hereby:
Note your decision on the appropriate box.

- [x] **Approved** — **All** changes apply.
- [ ] **Approved in Part** — Specify below which changes **do not** apply.
- [ ] **Denied** — State the reasons for denial below.

Comments: Admit. J.H. 7/11/07

Zachary Smith — **SPE**

2822 — **Art Unit**

UNITED STATES PATENT AND TRADEMARK OFFICE

Commissioner for Patents
United States Patent and Trademark Office
P.O. Box 1450
Alexandria, VA 22313-1450
www.uspto.gov
DIW 07-04

STERNE, KESSLER, GOLDSTEIN & FOX PLLC
1100 NEW YORK AVENUE, N.W.
WASHINGTON DC 20005

COPY MAILED

JUL 2 6 2004

OFFICE OF PETITIONS

In re Application of	:
Coston et al.	:
Application No. 10/812,978	: DECISION DISMISSING
Filed: 31 March, 2004	: PETITION
Atty Docket No. 1857.0700003	:

This is a decision on the petition filed on 2 July, 2004, requesting that the above-identified application be accorded a filing date of 31 March, 2004, with drawing Figures 4c and 5d as a part of the original disclosure.

On 31 March, 2004, the application was filed.

On 14 June, 2004, the Office of Initial Patent Examination (OIPE) mailed a Notice of Omitted Items in a Nonprovisional Application stating that the application had been accorded a filing date of 31 March, 2004, but that Figures 4c and 4d described in the specification appeared to have been omitted from the application.

In response, on 2 July, 2004, the present petition was filed. Petitioner concedes that Figures 4c and 4d were inadvertently omitted from the application, but states that the above-identified application is a continuation-in-part of Application No. 10/270,556, and incorporated the entire disclosure of the prior application by reference.

The petition is dismissed.

The mailing of a "Notice of Omitted Items" permits the applicant to either: (1) promptly establish prior receipt in the PTO of the drawing(s) at issue (generally by way of a date-stamped postcard receipt (MPEP 503)), or (2) promptly submit the omitted drawing(s) in a nonprovisional application and accept the date of such submission as the application filing date. An applicant asserting that the missing drawings were in fact deposited in the PTO with the application papers must file a petition (and the

appropriate petition fee) with evidence of such deposit. An applicant desiring to submit the omitted drawings in a nonprovisional application and accept the date of such submission as the application filing date must file any omitted drawing(s) with an oath or declaration in compliance with 37 CFR 1.63 and 1.64 referring to such drawing(s) and a petition under 37 CFR 1.182 (with the petition fee under 37 CFR 1.17(h)) requesting the later filing date within two months of the date of the "Notice of Omitted Items" (37 CFR 1.181(f)).

In this case, however, petitioner neither asserts that the missing drawings were deposited on 31 March, 2004, nor request the 2 July, 2004 (the date the drawings were supplied), filing date. Rather, petitioners state in the first sentence of the specification that the present application is a continuation-in-part of Application No. 10/270,556 "which [is] incorporated herein by reference in [its] entirety."

MPEP 201.06(c) states that:

> . . . an applicant may incorporate by reference the prior application by including, in the application-as-filed, a statement that such specifically enumerated prior application or applications are "hereby incorporated herein by reference." The statement may appear in the specification or in the application transmittal letter. The inclusion of this incorporation by reference of the prior application(s) will permit an applicant to amend the continuing application to include any subject matter in such prior application(s), <u>without the need for a petition</u>. (emphasis supplied)

Obviously, in view of the incorporation by reference of the prior application, the drawing of Figures 4c and 4d is not new matter if it was a part of the disclosure of the prior application.

Petitioner should file the drawing of Figures 4c and 4d as a preliminary amendment. If Figures 4c and 4d are filed as a preliminary amendment, they will be reviewed by the examiner for new matter.

The application will be processed using only the application papers present on filing. The one (1) sheet of drawings containing Figures 4c and 4d will not be processed for examination, but will be retained in the application file.

As this petition was necessitated by applicants' filing error rather than an error on the part of the Office, the petition fee will not be refunded.

The application is being returned to Initial Patent Examination Division for further processing with a filing date of 31 March, 2004, using only the application papers filed on that date.

Telephone inquiries concerning this matter may be directed to the undersigned at (703)308-6918.

D Wood

Douglas I. Wood
Senior Petitions Attorney
Office of Petitions

UNITED STATES PATENT AND TRADEMARK OFFICE

Commissioner for Patents
United States Patent and Trademark Office
P.O. Box 1450
Alexandria, VA 22313-1450
www.uspto.gov

COPY MAILED

FEB 24 2006

OFFICE OF PETITIONS

FINNEGAN, HENDERSON, FARABOW,
GARRETT & DUNNER
901 NEW YORK AVENUE, NW
WASHINGTON DC 20001-4413

In re Application of	:	
Yoshio Ozawa et al	:	
Application No. 10/812,987	:	ON PETITION
Filed: March 31, 2004	:	
Attorney Docket No. 04329.3298	:	

This is a decision on the petition, filed February 22, 2006, under 37 CFR 1.313(c)(2) to withdraw the above-identified application from issue after payment of the issue fee.

The petition is **GRANTED.**

The above-identified application is withdrawn from issue for consideration of a submission under 37 CFR 1.114 (request for continued examination). See 37 CFR 1.313(c)(2).

Petitioner is advised that the issue fee paid on January 13, 2006, in the above-identified application cannot be refunded. If, however, the above-identified application is again allowed, petitioner may request that it be applied towards the issue fee required by the new Notice of Allowance.[1]

Telephone inquiries should be directed to the undersigned at (571) 272-3208.

The examiner of Technology Center AU 2822 will consider the request for continued examination under 37 CFR 1.114.

Karen Creasy

Karen Creasy
Petitions Examiner
Office of Petitions
Office of the Deputy Commissioner
for Patent Examination Policy

---

[1] The request to apply the issue fee to the new Notice may be satisfied by completing and returning the new Issue Fee Transmittal Form PTOL-85(b), which includes the following language thereon: "Commissioner for Patents is requested to apply the Issue Fee and Publication Fee (if any) or re-apply any previously paid issue fee to the application identified above." Petitioner is advised that, whether a fee is indicated as being due or not, the Issue Fee Transmittal Form **must** be completed and timely submitted to avoid abandonment. Note the language in bold text on the first page of the Notice of Allowance and Fee(s) Due (PTOL-85).

UNITED STATES PATENT AND TRADEMARK OFFICE

Commissioner for Patents
United States Patent and Trademark Office
P.O. Box 1450
Alexandria, VA 22313-1450
www.uspto.gov

ANTONELLI, TERRY, STOUT & KRAUS
1300 NORTH SEVENTEENTH STREET
SUITE 1800
ARLINGTON VA 22209-3873

COPY MAILED

MAR 2 5 2005

OFFICE OF PETITIONS

In re Application of	:	
Kazuhiro Ohnishi et al	:	
Application No. 10/812,995	:	ON PETITION
Filed: March 31, 2004	:	
Attorney Docket No. 500.40010VX1	:	

This is a decision on the petition, filed March 24, 2005, under 37 CFR 1.313(c)(3) to withdraw the above-identified application from issue after payment of the issue fee.

The petition is **GRANTED**.

The above-identified application is withdrawn from issue for express abandonment. See 37 CFR 1.313(c)(3). The above-identified application is expressly abandoned in favor of a continuing application filed March 24, 2005.

The application is hereby withdrawn from issue, and the abandonment is hereby recognized.

Telephone inquiries should be directed to the undersigned at (571) 272-3208.

This matter is being forwarded to Files Repository.

Karen Creasy

Karen Creasy
Petitions Examiner
Office of Petitions
Office of the Deputy Commissioner
for Patent Examination Policy

UNITED STATES PATENT AND TRADEMARK OFFICE

COMMISSIONER FOR PATENTS
UNITED STATES PATENT AND TRADEMARK OFFICE
P.O. BOX 1450
ALEXANDRIA, VA 22313-1450
www.uspto.gov

Paper No. _____

Date : March 25, 2005

TO : Director, Office of Patent Publication

FROM : Office of the Deputy Commissioner
for Patent Examination Policy

SUBJECT : Withdrawal from Issue of

Applicant(s) :Kazuhiro Ohnishi et al
Application No. :10/812,995
Filed :March 31, 2004

The above-identified application has been assigned Patent No. 6,872,615 and an issue date of March 29, 2005.

It is hereby directed that this application be withdrawn from issue at the request of the applicant.

Do not refund the issue fee.

The following erratum should be published in the Official Gazette if the above-identified application is published in the OG of March 29, 2005:

> "All reference to Patent No. 6,872,615 to Kazuhiro Ohnishi et al of Japan for SEMICONDUCTOR DEVICE AND PROCESS FOR PRODUCING THE SAME appearing in the Official Gazette of March 29, 2005 should be deleted since no patent was granted."

Karen Creasy

Karen Creasy
Petitions Examiner
Office of Petitions
Office of the Deputy Commissioner
for Patent Examination Policy

cc: Paul Harrison, Crystal Park 3-441 (FAX-306-2737)
Deneise Boyd, Crystal Park 2, Suite 1100 (FAX-308-5413)
Mary Louise McAskill, Crystal Park 3-910 (FAX 305-4372)
Niomi Farmer, Crystal Park 3-910 (FAX-305-4372)
Mary E. Johnson (Cookie), P/OCS, CM1-6D07
Duane Davis (CDS), CM1-6A07
Tamara Greene, Crystal Park 3-908

UNITED STATES PATENT AND TRADEMARK OFFICE

Commissioner for Patents
United States Patent and Trademark Office
P.O. Box 1450
Alexandria, VA 22313-1450
www.uspto.gov

STEVEN S. PAYNE
8027 ILIFF DRIVE
DUNN LORING, VA 22027

COPY MAILED

MAR 17 2009

OFFICE OF PETITIONS

In re Application of	:	
Anders Hanson	:	
Application No. 10/812,997	:	ON PETITION
Filed: March 31, 2004	:	
Attorney Docket No. 150-153	:	

This is a decision on the petition under the unintentional provisions of 37 CFR 1.137(b), filed February 17, 2009, to revive the above-identified application.

The petition is **GRANTED**.

The application became abandoned for failure to timely file a reply within the meaning of 37 CFR 1.113 to the final Office action of March 20, 2007. The proposed reply required for consideration of a petition to revive must be a Notice of Appeal (and appeal fee required by 37 CFR 41.20(b)(2), an amendment that prima facie places the application in condition for allowance, a Request for Continued Examination and submission (37 CFR 1.114), or the filing of a continuing application under 37 CFR 1.53(b). See MPEP 711.03(c)(II)(A)(2). No extensions of time pursuant to the provisions of 37 CFR 1.136(a) were obtained. Accordingly, the date of abandonment of this application is June 21, 2007. A Notice of Abandonment was mailed November 1, 2007.

The petition satisfies the requirements of 37 CFR 1.137(b) in that petitioner has supplied (1) the reply in the form of a Request for Continued Examination (RCE) and fee of $405, (2) the petition fee of $810, and (3) an adequate statement of unintentional delay.

The file does not indicate a change of address has been submitted, although the address given on the petition differs from the address of record. If appropriate, a change of address should be filed in accordance with MPEP 601.03. A courtesy copy of this decision is being mailed to the address given on the petition; however, the Office will mail all future correspondence solely to the address of record.

Telephone inquiries concerning this decision should be directed to Alicia Kelley at (571) 272-6059.

This application is being referred to Technology Center AU 3724 for processing of the RCE and for appropriate action by the Examiner in the normal course of business in accordance with 37 CFR 1.114.

/SDB/

Sherry D. Brinkley
Petitions Examiner
Office of Petitions

cc: STEVEN S. PAYNE
ARATOR IP LAW GROUP PLLC
P.O. BOX 65024
WASHINGTON, DC 20035

UNITED STATES PATENT AND TRADEMARK OFFICE

Commissioner for Patents
United States Patent and Trademark Office
P.O. Box 1450
Alexandria, VA 22313-1450
www.uspto.gov

WILSON DANIEL SWAYZE, JR.
3804 CLEARWATER COURT
PIANO, TX 75025

COPY MAILED

JUN 30 2009

OFFICE OF PETITIONS

In re Application of :
Lee Melvin Hinman :
Application No. 10/812,998 : ON PETITION
Filed: March 31, 2004 :
Title: System and Method for a Made To :
Specification E-commerce Quoting and Orders
Processing System on a Stand Alone or
Integrated Portal

This is a decision on the petition filed June 10, 2009, under 37 CFR 1.137(b) to revive the above-identified application.

The petition is **GRANTED**.

A Final Office Action was mailed December 31, 2007 setting a three month shortened statutory period for reply. A response was filed March 24, 2008, but by Advisory Action of August 6, 2008, petitioner was advised that the response did not place the application in condition for allowance. Accordingly, the Notice of Abandonment was mailed September 19, 2008.

In response thereof, petitioner has submitted a Request for Continued Examination (RCE) and an amendment as the submission required under 37 CFR 1.114.

37 CFR 1.137(b)(3) however, requires a statement that the entire delay in filing the required reply from the due date for the reply until the filing of a grantable petition pursuant to 37 CFR 1.137(b) was unintentional. Since the statement contained in the petition varies from the language required by 37 CFR 1.137(b)(3), the statement contained in the petition is being construed as the statement required by 37 CFR 1.137(b)(3). Petitioner must notify the Office if this is **not** a correct interpretation of the statement contained in the petition.

Additionally, however, there is no indication that petitioner herein was ever empowered to prosecute the instant application. If petitioner desires to receive future correspondence regarding this application, the appropriate power of attorney documentation must be submitted. A courtesy copy of this decision is being mailed to petitioner. However, all future correspondence will be directed to the address of record until such time as appropriate instructions are received to the contrary.

This matter is being referred to Technology Center 3625 for processing of the RCE.

Telephone inquiries related to this decision should be directed to the undersigned Petitions Attorney at (571) 272-3212.

Patricia Faison-Ball

Patricia Faison-Ball
Senior Petitions Attorney
Office of Petitions

UNITED STATES PATENT AND TRADEMARK OFFICE

Commissioner for Patents
United States Patent and Trademark Office
P.O. Box 1450
Alexandria, VA 22313-1450
www.uspto.gov

FITZPATRICK CELLA HARPER & SCINTO
30 ROCKEFELLER PLAZA
NEW YORK NY 10112-3800

MAIL

FEB - 6 2007

DIRECTOR OFFICE
TECHNOLOGY CENTER 2600

In re Application of	:	
MICHIHIRO IZUORI	:	DECISION ON REQUEST TO
Application No. 10/813006	:	PARTICIPATE IN PATENT
Filed: March 31, 2004	:	PROSECUTION HIGHWAY
Attorney Docket No. 00862.023522	:	PILOT PROGRAM AND PETITION
	:	TO MAKE SPECIAL UNDER
	:	37 CFR 1.102(d)

This is a decision on the request to participate in the Patent Prosecution Highway (PPH) pilot program and the petition under 37 CFR 1.102(d), filed January 23, 2007, to make the above-identified application special.

The request and petition are **GRANTED**.

A grantable request to participate in the PPH pilot program and petition to make special require:

(1) The U.S. application must validly claim priority under 35 U.S.C. 119(a) to one or more applications filed in the JPO;
(2) Applicant must submit a copy of the allowable/patentable claim(s) from the JPO application(s) along with an English translation thereof and a statement that the English translation is accurate;
(3) All the claims in the U.S. application must sufficiently correspond or be amended to sufficiently correspond to the allowable/patentable claim(s) in the JPO application(s);
(4) Examination of the U.S. application has not begun;
(5) Applicant must submit a copy of all the office actions from each of the JPO application(s) containing the allowable/patentable claim(s) along with an English translation thereof and a statement that the English translation is accurate;
(6) Applicant must submit an IDS listing the documents cited by the JPO examiner in the JPO office action along with copies of documents except U.S. patents or U.S. patent application publications; and
(7) The required petition fee under 37 CFR 1.17(h).

The request to participate in the PPH pilot program and petition comply with the above requirements. Accordingly, the above-identified application has been accorded "special" status.

Telephone inquiries concerning this decision should be directed to John Peng at 571-272-7272.

All other inquiries concerning the examination or status of the application should be directed to Patent Application Information Retrieval (PAIR) system.

The application is being forwarded to the examiner for action on the merits commensurate with this decision.

John Peng
TC 2600
Quality Assurance Specialist

UNITED STATES PATENT AND TRADEMARK OFFICE

Commissioner for Patents
United States Patent and Trademark Office
P.O. Box 1450
Alexandria, VA 22313-1450
www.uspto.gov

MAIL

DEC 02 2008

DIRECTOR OFFICE
TECHNOLOGY CENTER 2400

PEARL COHEN ZEDEK LATZER, LLP
1500 Broadway, 12th floor
New York, NY 10036

In re Application of Boris Ginzburg et al. :
Appl. No.: 10/813,027 :
Filed: March 31, 2004 :
Attorney Docket No.: P-6388-US :
For: METHOD AND APPARATUS TO MULTICAST :
TRANSMISSION :

DECISION ON PETITION
UNDER 37 C.F.R. §1.6

This is a decision on the petition under 37 C.F.R. § 1.6 and 1.181, filed July 3, 2008 , which is being treated as a petition under 37 C.F.R. 1.6 and 1.8 to accept a Request for Continued Examination (RCE), filed via facsimile transmission, in response to a Final Office Action as timely filed.

The petition is GRANTED.

Petitioner asserts that on April 11, 2006, Applicants' attorney transmitted via facsimile 16 pages including a facsimile cover sheet, RCE, and Amendment in response to the Final Office Action dated January 11, 2008. Applicants' attorney facsimile machine printed a report confirming the transmission of 16 pages to the Office's centralized facsimile number (571) 273-8300. The facsimile cover sheet also includes a Certificate of Transmission signed by Adi Stav-Golding in accordance with 37 C.F.R. 1.8. The above 16 pages of facsimile transmission, however, was never entered into the record.

The petition satisfies the requirements of 37 C.F.R. 1.6 and 1.8 in that the petition has supplied (1) a copy of the Auto-Reply Facsimile Transmission from the Office indicating receipt of the 16 pages including the facsimile cover sheet originally sent, (2) a copy of the above-mentioned Certificate of Transmission, and (3) a copy of the original 16-page response. Accordingly, the Request for Continued Examination, resubmitted concurrently with the petition on July 3, 2008, is accepted as being timely and no extension-of-time fee will be charged.

This application is being referred to the Technical Support Staff for processing of the Request for Continued Examination.

Any inquiry regarding this decision should be directed to Chi Pham, Supervisory Patent Examiner, at (571) 272-3179.

Valencia Martin-Wallace, TC Director
Technology Center 2400

UNITED STATES PATENT AND TRADEMARK OFFICE

Commissioner for Patents
United States Patent and Trademark Office
PO BOX 1450
ALEXANDRIA, VA 22313-1450
www.uspto.gov

STERNE, KESSLER, GOLDSTEIN & FOX PLLC
1100 NEW YORK AVENUE, N.W.
WASHINGTON DC 20005

COPY MAILED

SEP 14 2004

OFFICE OF PETITIONS

In re Application of :
Howard et al. :
Application No. 10/813,032 : DECISION ON PETITION
Filed: March 31, 2004 :
Attorney Docket No. 1487.0100002 :

This is in response to the petition filed under 37 CFR 1.47(a) on August 12, 2004.

In accordance with 37 CFR 1.63(d), petitioner has submitted a copy of the executed oath or declaration filed in Application No. 09/590,588, filed on June 8, 2000. The present application is a divisional application of Application No. 09/590,588. Furthermore, a copy of the decision, mailed on April 13, 2001, granting a petition in Application No. 09/590,588 to accord § 1.47(a) status to the prior application has been placed in the file of the present application.

As Rule 1.47(a) status was granted in the prior application, this application is hereby accorded Rule 1.47(a) status. The Notice to File Missing Parts of June 14, 2004, was mailed in error.

As no petition is necessary to accord Rule 1.47(a) status in this application, the petition is **dismissed**, as involving a moot issue.

As provided in Rule 1.47(c), because notice was provided after the grant of Rule 1.47(a) status in the prior application, the Office is dispensing with the notice provision in this divisional application.

Any inquiries related to this decision should be directed to the undersigned at (703) 306-5589.

Christina Tartera Donnell

Christina Tartera Donnell
Senior Petitions Attorney
Office of Petitions

UNITED STATES PATENT AND TRADEMARK OFFICE

Commissioner for Patents
United States Patent and Trademark Office
P.O. Box 1450
Alexandria, VA 22313-1450
www.uspto.gov

Paper No. 120904

DEC 20 2004

OBLON, SPIVAK, MCCLELLAND,
MAIER & NEUSTADT, P.C.
1940 Duke Street
Alexandria, VA 22314

In re Application of:
HIRANO *et al.*
Serial No.: 10/813,038
Filed: March 31, 2004
Attorney Docket No.: **251076US**

NOTICE OF WITHDRAWAL
FROM ISSUE
UNDER 37 CFR § 1.313

The purpose of this communication is to inform you that the above-identified application is being withdrawn from issue pursuant to 37 CFR § 1.313.

The above-identified application is hereby withdrawn from issue. The Notice of Allowance and Issue Fee Due and the Notice of Allowability mailed September 29, 2004, are hereby vacated.

The application is being withdrawn to permit reopening of prosecution. The reasons therefor will be communicated to you by the examiner in the next Office action.

Upon receipt of a new Notice of Allowance and Issue Fee Due, applicant may request that any previously submitted issue fee be applied toward payment of the issue fee in the amount identified on the new Notice of Allowance and Issue Fee Due. If the application is abandoned, applicant may request either a refund, or a credit to a Deposit Account.

Telephone inquires should be directed to Tom Thomas at (571) 272-1664.

The above-identified application is being forwarded to the examiner for prompt appropriate action.

James L. Dwyer, Director
Technology Center 2800
Semiconductors, Electrical and Optical
Systems and Components

Mr. Dwyer,

Attached is the memo that you must sign and action to withdraw Application No. 10/813,038 from issue. The Applicants sent in an IDS after the Notice of Allowance with the proper fee and statement. One of the patents read directly on some of the claims. They would not accept a simple Examiner's Amendment and therefore the case must be withdrawn form issue. I showed it to Tom Thomas before he left.

Sincerely,

Allan Wilson

Primary Examiner

AU 2815

SPE RESPONSE FOR CERTIFICATE OF CORRECTION

Paper No.: _____

DATE : 4/19/06

TO SPE OF : ART UNIT 2815

SUBJECT : Request for Certificate of Correction for Appl. No.: 10/813038 Patent No.: 6975041

Please respond to this request for a certificate of correction within 7 days.

Please review the requested changes/corrections as shown in the **COCIN** document(s) in the IFW application image. No new matter should be introduced, nor should the scope or meaning of the claims be changed.

Check Claims

Please complete the response (see below) and forward the completed response to scanning using document code **COCX**.

Certificates of Correction Branch

703-308-9390 ext. _____

Thank You For Your Assistance

The request for issuing the above-identified correction(s) is hereby:

Note your decision on the appropriate box.

- ☒ **Approved** — All changes apply.
- ☐ **Approved in Part** — Specify below which changes do not apply.
- ☐ **Denied** — State the reasons for denial below.

Comments: CORRECTION CONTAINS THE CORRECT CLAIMS.

SPE

2815
Art Unit

UNITED STATES PATENT AND TRADEMARK OFFICE

UNITED STATES DEPARTMENT OF COMMERCE
United States Patent and Trademark Office
Address: COMMISSIONER FOR PATENTS
P.O. Box 1450
Alexandria, Virginia 22313-1450
www.uspto.gov

APPL NO.	FILING OR 371 (c) DATE	ART UNIT	FIL FEE REC'D	ATTY.DOCKET NO	DRAWINGS	TOT CLMS	IND CLMS
10/813,040	03/29/2004	2115	1460	501292.01 (30263/US)	4	44	6

CONFIRMATION NO. 4142

CORRECTED FILING RECEIPT

OC000000013788786

Edward W. Bulchis, Esq.
DORSEY & WHITNEY LLP
Suite 3400
1420 Fifth Avenue
Seattle, WA 98101

Date Mailed: 09/13/2004

Receipt is acknowledged of this regular Patent Application. It will be considered in its order and you will be notified as to the results of the examination. Be sure to provide the U.S. APPLICATION NUMBER, FILING DATE, NAME OF APPLICANT, and TITLE OF INVENTION when inquiring about this application. Fees transmitted by check or draft are subject to collection. Please verify the accuracy of the data presented on this receipt. **If an error is noted on this Filing Receipt, please write to the Office of Initial Patent Examination's Filing Receipt Corrections, facsimile number 703-746-9195. Please provide a copy of this Filing Receipt with the changes noted thereon. If you received a "Notice to File Missing Parts" for this application, please submit any corrections to this Filing Receipt with your reply to the Notice. When the USPTO processes the reply to the Notice, the USPTO will generate another Filing Receipt incorporating the requested corrections (if appropriate).**

Applicant(s)

Ralph James, Andover, MN;

Power of Attorney: The patent practitioners associated with Customer Number **27076**.

Domestic Priority data as claimed by applicant

Foreign Applications

If Required, Foreign Filing License Granted: 06/08/2004

The number of your priority application, to be used for filing abroad under the Paris Convention is,
US10/813,040

Projected Publication Date: 09/29/2005

Non-Publication Request: No

Early Publication Request: No

Title

Method and system for synchronizing communications links in a hub-based memory system

Preliminary Class

713

LICENSE FOR FOREIGN FILING UNDER
Title 35, United States Code, Section 184
Title 37, Code of Federal Regulations, 5.11 & 5.15

GRANTED

The applicant has been granted a license under 35 U.S.C. 184, if the phrase "IF REQUIRED, FOREIGN FILING LICENSE GRANTED" followed by a date appears on this form. Such licenses are issued in all applications where the conditions for issuance of a license have been met, regardless of whether or not a license may be required as set forth in 37 CFR 5.15. The scope and limitations of this license are set forth in 37 CFR 5.15(a) unless an earlier license has been issued under 37 CFR 5.15(b). The license is subject to revocation upon written notification. The date indicated is the effective date of the license, unless an earlier license of similar scope has been granted under 37 CFR 5.13 or 5.14.

This license is to be retained by the licensee and may be used at any time on or after the effective date thereof unless it is revoked. This license is automatically transferred to any related applications(s) filed under 37 CFR 1.53(d). This license is not retroactive.

The grant of a license does not in any way lessen the responsibility of a licensee for the security of the subject matter as imposed by any Government contract or the provisions of existing laws relating to espionage and the national security or the export of technical data. Licensees should apprise themselves of current regulations especially with respect to certain countries, of other agencies, particularly the Office of Defense Trade Controls, Department of State (with respect to Arms, Munitions and Implements of War (22 CFR 121-128)); the Office of Export Administration, Department of Commerce (15 CFR 370.10 (j)); the Office of Foreign Assets Control, Department of Treasury (31 CFR Parts 500+) and the Department of Energy.

NOT GRANTED

No license under 35 U.S.C. 184 has been granted at this time, if the phrase "IF REQUIRED, FOREIGN FILING LICENSE GRANTED" DOES NOT appear on this form. Applicant may still petition for a license under 37 CFR 5.12, if a license is desired before the expiration of 6 months from the filing date of the application. If 6 months has lapsed from the filing date of this application and the licensee has not received any indication of a secrecy order under 35 U.S.C. 181, the licensee may foreign file the application pursuant to 37 CFR 5.15(b).

UNITED STATES PATENT AND TRADEMARK OFFICE

Commissioner for Patents
United States Patent and Trademark Office
P.O. Box 1450
Alexandria, VA 22313-1450
www.uspto.gov

RADER FISHMAN & GRAUER PLLC
LION BUILDING
1233 20TH STREET N.W., SUITE 501
WASHINGTON DC 20036

COPY MAILED

JAN 0 9 2007

OFFICE OF PETITIONS

In re Application of	:
Jose Pascual Garcia Jr. et al	:
Application No. 10/813,044	: DECISION ON PETITION
Filed: March 31, 2004	: UNDER 37 CFR 1.78(a)(6)
Attorney Docket No. SOA-0385	:

This is a decision on the petition under 37 CFR 1.78(a)(6), filed August 4, 2006, to accept an unintentionally delayed claim under 35 U.S.C. § 119 for the benefit of priority to the prior-filed provisional application set forth in the amendment filed with the petition.

The petition is **GRANTED**.

A petition for acceptance of a claim for late priority under 37 CFR 1.78(a)(6) is only applicable to those applications filed on or after November 29, 2000. Further, the petition is appropriate only after the expiration of the period specified in 37 CFR 1.78(a)(5)(ii). In addition, the petition under 37 CFR 1.78(a)(6) must be accompanied by:

(1) the reference required by 35 U.S.C. § 119 and 37 CFR 1.78(a)(5)(i) of the prior-filed application, unless previously submitted;
(2) the surcharge set forth in § 1.17(t); and
(3) a statement that the entire delay between the date the claim was due under 37 CFR 1.78(a)(5)(ii) and the date the claim was filed was unintentional. The Director may require additional information where there is a question whether the delay was unintentional.

All the above requirements having been satisfied, the late claim for priority under 35 U.S.C. § 119 is accepted as being unintentionally delayed.

The granting of the petition to accept the delayed benefit claim to the prior-filed application under 37 CFR 1.78(a)(6) should not be construed as meaning that this application is entitled to the benefit of the prior-filed application. In order for this application to be entitled to the benefit of the prior-filed application, all other requirements under 35 U.S.C. § 119 and 37

CFR 1.78(a)(4) and (a)(5) must be met. Similarly, the fact that the corrected Filing Receipt accompanying this decision on petition includes the prior-filed application should not be construed as meaning that applicant is entitled to the claim for benefit of priority to the prior-filed application noted thereon. Accordingly, the examiner will, in due course, consider this benefit claim and determine whether the application is entitled to the benefit of the earlier filing date.

A corrected Filing Receipt, which includes the priority claim to the prior-filed provisional application, accompanies this decision on petition.

It is noted in the amendment filed with the instant petition that the filing date of prior-filed Provisional Application No. 60/530,070 reference a filing date of December 15, 2003 instead of the actual filing date of December 16, 2003. (Correction is required)

Any inquiries concerning this decision may be directed to the undersigned at (571) 272-3208. All other inquiries concerning either the examination procedures or status of the application should be directed to the Technology Center.

This application is being forwarded to Technology Center Art Unit 3728 to consider the amendment filed August 4, 2006, including consideration by the examiner of applicant's entitlement to claim benefit of priority under 35 U.S.C. § 119 to the prior-filed application.

Karen Creasy

Karen Creasy
Petitions Examiner
Office of Petitions

ATTACHMENT: Corrected Filing Receipt

UNITED STATES PATENT AND TRADEMARK OFFICE

UNITED STATES DEPARTMENT OF COMMERCE
United States Patent and Trademark Office
Address: COMMISSIONER FOR PATENTS
P.O. Box 1450
Alexandria, Virginia 22313-1450
www.uspto.gov

APPL NO.	FILING OR 371 (c) DATE	ART UNIT	FIL FEE REC'D	ATTY.DOCKET NO	DRAWINGS	TOT CLMS	IND CLMS
10/813,044	03/31/2004	3728	1414	SOA-0385	5	28	3

CONFIRMATION NO. 4867

CORRECTED FILING RECEIPT

OC000000021891408

OC000000021891408

23353
RADER FISHMAN & GRAUER PLLC
LION BUILDING
1233 20TH STREET N.W., SUITE 501
WASHINGTON, DC 20036

Date Mailed: 01/08/2007

Receipt is acknowledged of this regular Patent Application. It will be considered in its order and you will be notified as to the results of the examination. Be sure to provide the U.S. APPLICATION NUMBER, FILING DATE, NAME OF APPLICANT, and TITLE OF INVENTION when inquiring about this application. Fees transmitted by check or draft are subject to collection. Please verify the accuracy of the data presented on this receipt. **If an error is noted on this Filing Receipt, please mail to the Commissioner for Patents P.O. Box 1450 Alexandria Va 22313-1450. Please provide a copy of this Filing Receipt with the changes noted thereon. If you received a "Notice to File Missing Parts" for this application, please submit any corrections to this Filing Receipt with your reply to the Notice. When the USPTO processes the reply to the Notice, the USPTO will generate another Filing Receipt incorporating the requested corrections (if appropriate).**

Applicant(s)

Jose Pascual Garcia JR., Terre Haute, IN;
Michael John Brown, Terre Haute, IN;

Power of Attorney:

Richard Grauer--22388
Ronald Kananen--24104
Ralph Rader--28772
Carl Schaukowitch--29211
Michael Fishman--31951
Joseph Coppola Sr--33373
Michael Stewart--36018
Peter Toto--36293
Frederick Zustak--36728
Alexander Rabinovich--37425

Domestic Priority data as claimed by applicant

This appln claims benefit of 60/530,070 12/16/2003 .

Foreign Applications

If Required, Foreign Filing License Granted: 06/08/2004

The country code and number of your priority application, to be used for filing abroad under the Paris Convention, is US10/813,044

Projected Publication Date: Not Applicable

Non-Publication Request: No

Early Publication Request: No

Title

DISC CARTRIDGE STORAGE CASE HAVING PRESENTATION STAND

Preliminary Class

206

PROTECTING YOUR INVENTION OUTSIDE THE UNITED STATES

Since the rights granted by a U.S. patent extend only throughout the territory of the United States and have no effect in a foreign country, an inventor who wishes patent protection in another country must apply for a patent in a specific country or in regional patent offices. Applicants may wish to consider the filing of an international application under the Patent Cooperation Treaty (PCT). An international (PCT) application generally has the same effect as a regular national patent application in each PCT-member country. The PCT process **simplifies** the filing of patent applications on the same invention in member countries, but **does not result** in a grant of "an international patent" and does not eliminate the need of applicants to file additional documents and fees in countries where patent protection is desired.

Almost every country has its own patent law, and a person desiring a patent in a particular country must make an application for patent in that country in accordance with its particular laws. Since the laws of many countries differ in various respects from the patent law of the United States, applicants are advised to seek guidance from specific foreign countries to ensure that patent rights are not lost prematurely.

Applicants also are advised that in the case of inventions made in the United States, the Director of the USPTO must issue a license before applicants can apply for a patent in a foreign country. The filing of a U.S. patent application serves as a request for a foreign filing license. The application's filing receipt contains further information and guidance as to the status of applicant's license for foreign filing.

Applicants may wish to consult the USPTO booklet, "General Information Concerning Patents" (specifically, the section entitled "Treaties and Foreign Patents") for more information on timeframes and deadlines for filing foreign patent applications. The guide is available either by contacting the USPTO Contact Center at 800-786-9199, or it can be viewed on the USPTO website at http://www.uspto.gov/web/offices/pac/doc/general/index.html.

For information on preventing theft of your intellectual property (patents, trademarks and copyrights), you may wish to consult the U.S. Government website, http://www.stopfakes.gov. Part of a Department of Commerce initiative, this website includes self-help "toolkits" giving innovators guidance on how to protect intellectual property in specific countries such as China, Korea and Mexico. For questions regarding patent enforcement issues, applicants may call the U.S. Government hotline at 1-866-999-HALT (1-866-999-4158).

LICENSE FOR FOREIGN FILING UNDER
Title 35, United States Code, Section 184
Title 37, Code of Federal Regulations, 5.11 & 5.15

GRANTED

The applicant has been granted a license under 35 U.S.C. 184, if the phrase "IF REQUIRED, FOREIGN FILING LICENSE GRANTED" followed by a date appears on this form. Such licenses are issued in all applications where the conditions for issuance of a license have been met, regardless of whether or not a license may be required as set forth in 37 CFR 5.15. The scope and limitations of this license are set forth in 37 CFR 5.15(a) unless an earlier license has been issued under 37 CFR 5.15(b). The license is subject to revocation upon written notification. The

date indicated is the effective date of the license, unless an earlier license of similar scope has been granted under 37 CFR 5.13 or 5.14.

This license is to be retained by the licensee and may be used at any time on or after the effective date thereof unless it is revoked. This license is automatically transferred to any related applications(s) filed under 37 CFR 1.53(d). This license is not retroactive.

The grant of a license does not in any way lessen the responsibility of a licensee for the security of the subject matter as imposed by any Government contract or the provisions of existing laws relating to espionage and the national security or the export of technical data. Licensees should apprise themselves of current regulations especially with respect to certain countries, of other agencies, particularly the Office of Defense Trade Controls, Department of State (with respect to Arms, Munitions and Implements of War (22 CFR 121-128)); the Bureau of Industry and Security, Department of Commerce (15 CFR parts 730-774); the Office of Foreign Assets Control, Department of Treasury (31 CFR Parts 500+) and the Department of Energy.

NOT GRANTED

No license under 35 U.S.C. 184 has been granted at this time, if the phrase "IF REQUIRED, FOREIGN FILING LICENSE GRANTED" DOES NOT appear on this form. Applicant may still petition for a license under 37 CFR 5.12, if a license is desired before the expiration of 6 months from the filing date of the application. If 6 months has lapsed from the filing date of this application and the licensee has not received any indication of a secrecy order under 35 U.S.C. 181, the licensee may foreign file the application pursuant to 37 CFR 5.15(b).

UNITED STATES PATENT AND TRADEMARK OFFICE

Commissioner for Patents
United States Patent and Trademark Office
P.O. Box 1450
Alexandria, VA 22313-1450
www.uspto.gov

MCGINN INTELLECTUAL PROPERTY LAW GROUP, PLLC
8321 OLD COURTHOUSE ROAD
SUITE 200
VIENNA VA 22182-3817

MAR 02 2007

In re Application of: FUKUSHIMA et al	:
Appl. No.: 10/813,054	: DECISION ON PETITION
Filed: March 31, 2004	:
For: FUEL TANK STRUCTURE	:

This is a decision on the petition filed on January 23, 2007 by which petitioners request acceptance of a duplicate paper. The petition is considered pursuant to 37 CFR 1.181, and no fee is required.

The petition is granted.

On September 26, 2006 a Final Office Action was issued in the instant file. An amendment under 37 CFR 1.116 was filed by petitioner on November 27, 2006. This paper was not completely received by the Office, as the file wrapper does not show receipt of a certified translation of the priority document.

Petitioner has submitted an evidentiary copy of the November 27, 2006 certified translation along with a copy of a post card receipt clearly indicating a certified translation of a priority document was received by the office on November 27, 2006. Petitioner has also included a statement attesting the duplicate papers represent a true copy of the papers filed on November 27, 2006. Based upon this evidence, the duplicate paper is accepted.

The file will be forwarded to the examiner of record for consideration of the November 27, 2006 amendment under 37 CFR 1.116, including the certified translation of the priority document.

PETITION GRANTED

Karen M. Young

Karen M. Young, Director
Technology Center 3700

UNITED STATES PATENT AND TRADEMARK OFFICE

Commissioner for Patents
United States Patent and Trademark Office
P.O. Box 1450
Alexandria, VA 22313-1450
www.uspto.gov

BLANK ROME LLP
600 NEW HAMPSHIRE AVENUE, N.W.
WASHINGTON DC 20037

COPY MAILED

JUN 0 2 2008

OFFICE OF PETITIONS

In re Application of :
Jung-Seon Park :
Application No. 10/813086 :
Filing or 371(c) Date: 03/31/2004 :
Attorney Docket Number: :
116511-00135 : ON PETITION

This is a decision on the "Request to Withdraw Holding of Abandonment Under 37 C.F.R. § 1.181", filed January 8, 2008. The delay in treating this petition is regretted.

This Petition is hereby **granted**.

The above-identified application became abandoned for failure to timely and properly reply to the non-final Office action, mailed April 27, 2007. The Office action set a three (3) month period for reply, and provided for extensions of time under 37 CFR 1.136(a). No response having been received, the application became abandoned on July 28, 2007. A Notice of Abandonment was mailed November 30, 2007.

Applicant's Assertion

Applicant files the instant petition and asserts that a timely reply to the Office action was filed on July 24, 2007. In support of this assertion applicant files a copy of the reply, along with a copy of his return-receipt postcard which acknowledges receipt by this Office of a Reply and Amendment, and Amendment Cover Sheet on July 24, 2007.

Office records

A review of Office records also reveals that the Office received an amendment, and an authorization to charge any required fees on July 24, 2007.

Conclusion

In view of the foregoing, the petition is granted. The holding of abandonment is hereby withdrawn.

The application will be referred to Technology Center Art Unit 3723 for processing of the Amendment, and for continued examination in due course.

Telephone inquiries concerning this matter should be directed to the undersigned at (571) 272-3232.

Derek L. Woods
Attorney
Office of Petitions

UNITED STATES PATENT AND TRADEMARK OFFICE

Commissioner for Patents
United States Patent and Trademark Office
P.O. Box 1450
Alexandria, VA 22313-1450
www.uspto.gov

Patrick S. Yoder
FLETCHER YODER
P.O. Box 692289
Houston TX 77269-2289

COPY MAILED
APR 2 0 2006
OFFICE OF PETITIONS

In re Application of :
Ghasripoor, et al. :
Application No. 10/813,102 :
Filed: March 30, 2004 :
Attorney Docket No. 129274-1/YOD :
GERD:0084
For: SEALING DEVICE AND METHOD
FOR TURBOMACHINERY

ON PETITION

This is a decision on the petition, filed February 27, 2006 (certificate of mailing date August 2, 2005), under 37 CFR 1.137(b) to revive the above-identified application.

The above-identified application became abandoned for failure to timely submit a reply within 30 days of the mailing of the February 11, 2005 Office action. No response being received, this application became abandoned on March 14, 2005. A Notice of Abandonment was mailed on May 23, 2005.

Applicants have submitted a property rights declaration in reply to the February 11, 2005 Office action, an acceptable statement of the unintentional nature of the delay in responding to the February 11, 2005 Office action, and authorization to charge the petition fee to deposit account no. 07-0868. Pursuant to petitioners' authorization, the Office will charge the required $1,500.00 petition fee to the aforementioned deposit account.

The petition is **GRANTED**.

After the mailing of this decision the application will be forwarded to Technology Center AU 3745.

Telephone inquiries should be directed to the undersigned at (571) 272-3230.

E. Shirene Willis
Senior Petitions Attorney
Office of Petitions

UNITED STATES PATENT AND TRADEMARK OFFICE

Commissioner for Patents
United States Patent and Trademark Office
P.O. Box 1450
Alexandria, VA 22313-1450
www.uspto.gov

MORRISON & FOERSTER LLP
1650 TYSONS BOULEVARD
SUITE 400
MCLEAN VA 22102

COPY MAILED

JUN 0 1 2007

OFFICE OF PETITIONS

In re Application of :

GIRT, Erol :
Application No. 10/813,117 :
Filed: March 31, 2004 :
Attorney Docket No. **146712004800** :

DECISION ON PETITION
TO WITHDRAW
FROM RECORD

This is a decision on the Request to Withdraw as attorney or agent of record under 37 C.F.R. § 1.36(b), filed March 30, 2007.

The request is **APPROVED**.

A grantable request to withdraw as attorney/agent of record must be signed by every attorney/agent seeking to withdraw or contain a clear indication that one attorney is signing on behalf of another/others. A request to withdraw will not be approved unless at least 30 (thirty) days would remain between the date of approval and the later of the expiration date of a time to file a response or the expiration date of the maximum time period which can be extended under 37 C.F.R. § 1.136(a).

The request was signed by Peter J. Davis on behalf of all attorneys of record. Applicant is reminded that there is no attorney of record at this time.

The request to change the correspondence of record is not acceptable as the requested correspondence address is not that of: (1) the first named signing inventor; or (2) an intervening assignee of the entire interest under 37 C.F.R 3.71. All future communications from the Office will be directed to the first named signing inventor at the first copied address below until otherwise properly notified by the applicant.

There is an outstanding Office action mailed February 26, 2007 that requires a reply from the applicant.

Telephone inquiries concerning this decision should be directed to Tredelle Jackson at 571-272-2783.

Monica A. Graves
Petitions Examiner
Office of Petitions

cc: **EROL GIRT**
2704 COLLEGE AVE., #4
BERKELEY, CA 94705

cc: **RAJ S. DAVE**
DARBY & DARBY P.C.
1500 K STREET, N.W.
SUITE 250
WASHINGTON, DC 20005-1714

UNITED STATES PATENT AND TRADEMARK OFFICE

COMMISSIONER FOR PATENTS
UNITED STATES PATENT AND TRADEMARK OFFICE
P.O. BOX 1450
ALEXANDRIA, VA 22313-1450
www.uspto.gov

GENE M. GARNER II
STAAS & HALSEY LLP
1201 NEW YORK AVE., NW, 7TH FLOOR
WASHINGTON DC 20005

COPY MAILED
DEC 12 2007
OFFICE OF PETITIONS

In re Patent No. 7,178,016	:	
Issue Date: February 13, 2007	:	
Application No. 10/813,125	:	DECISION ON PETITION
Filed: March 31, 2004	:	
Attorney Docket No. 1572.1231	:	

This is a decision on the petition under 37 CFR 1.182, filed August 22, 2007, requesting issuance of a duplicate Letters Patent for the above-identified patent.

The petition is **GRANTED**.

The Publishing Division is directed to issue a duplicate Letters Patent.

As authorized, the $400 fee for the petition under 37 CFR 1.182 has been assessed to petitioner's deposit account.

Telephone inquiries concerning this decision may be directed to the undersigned at (571) 272-3204. Inquiries regarding the issuance of a duplicate Letters Patent may be directed to Krystal Paige in the Publishing Division at (703) 308-9250, Ext. 139.

A copy of this decision is being faxed to Publishing Division for issuance of a duplicate Letters Patent.

Sherry D. Brinkley
Petitions Examiner
Office of Petitions

cc: Krystal Paige, South Tower, 8th Floor, Room C32 (Fax No. (571) 270-9937)

UNITED STATES PATENT AND TRADEMARK OFFICE

Commissioner for Patents
United States Patent and Trademark Office
P.O. Box 1450
Alexandria, VA 22313-1450
www.uspto.gov

COPY MAILED

JUL 23 2007

OFFICE OF PETITIONS

NATIONAL STARCH AND CHEMICAL COMPANY
P.O. BOX 6500
BRIDGEWATER, NJ 08807-3300

In re Application of	:	
Jean-Pierre Leblanc et al	:	
Application No. 10/813,153	:	ON PETITION
Filed: March 30, 2004	:	
Attorney Docket No. 2022D.PC	:	

This is a decision on the petition under 37 CFR 1.137(b), filed January 22, 2007, to revive the above-identified application.

The petition is **GRANTED**.

This application became abandoned as a result of petitioner's failure to file an appeal brief (and fee required by 37 CFR 41.20(b)(2)) within the time period provided in 37 CFR 41.37(a)(1). As an appeal brief (and appeal brief fee) was not filed within two (2) months of the Notice of Appeal filed July 18, 2006, and no extensions of time under the provisions of 37 CFR 1.136(a) were obtained, the appeal was dismissed and the proceedings as to the rejected claims were terminated. See 37 CFR 1.197(b). As no claim was allowed, the application became abandoned on September 19, 2006. *See* MPEP 1215.04.

The file does not indicate a change of address has been submitted, although the address given on the petition differs from the address of record. If appropriate, a change of address should be filed in accordance with MPEP 601.03. A courtesy copy of this decision is being mailed to the address given on the petition; however, the Office will mail all future correspondence solely to the address of record.

Telephone inquiries concerning this decision should be directed to Irvin Dingle at (571) 272-3210.

This matter is being referred to Technology Center AU 1615 for further processing.

Irvin Dingle
Petitions Examiner
Office of Petitions

cc: David P. LeCroy
National Starch and Chemical Company
10 Finderne Avenue
Bridgewater, NJ 08807

UNITED STATES PATENT AND TRADEMARK OFFICE

Commissioner for Patents
United States Patent and Trademark Office
P.O. Box 1450
Alexandria, VA 22313-1450
www.uspto.gov

RADER FISHMAN & GRAUER PLLC
LION BUILDING
1233 20TH STREET N.W., SUITE 501
WASHINGTON DC 20036

COPY MAILED

MAR 28 2008

OFFICE OF PETITIONS

In re Application of :
Mindru Kawahara :
Application No. 10/813,174 :
Filed: March 31, 2004 :
Attorney Docket No.SON-2966 :

ON PETITION

This is a decision on the petition under the unintentional provisions of 37 CFR 1.137(b), filed February 5, 2008, to revive the above-identified application.

The petition is **GRANTED**.

The application became abandoned for failure to timely file a reply within the meaning of 37 CFR 1.113 to the final Office action of July 11, 2007. The proposed reply required for consideration of a petition to revive must be a Notice of Appeal (and appeal fee required by 37 CFR 41.20(b)(2), an amendment that *prima facie* places the application in condition for allowance, a Request for Continued Examination and submission (37 CFR 1.114), or the filing of a continuing application under 37 CFR 1.53(b). See MPEP 711.03(c)(III)(A)(2). Three months extensions of time pursuant to the provisions of 37 CFR 1.136(a) were obtained. Accordingly, the date of abandonment of this application is January 13, 2008.

The petition satisfies the requirements of 37 CFR 1.137(b) in that petitioner has supplied (1) the reply in the form of a Request for Continued Examination (RCE) and fee of $810.00, and the submission required by 37 CFR 1.114; (2) the petition fee of $1540.00; and (3) a proper statement of unintentional delay.

Telephone inquiries concerning this decision should be directed to the undersigned at (571) 272-3215.

This application is being referred to Technology Center AU 2627 for processing of the RCE and

for appropriate action by the Examiner in the normal course of business on the amendment submitted in accordance with 37 CFR 1.114.

Charlema Grant
Petitions Attorney
Office of Petitions

SPE RESPONSE FOR CERTIFICATE OF CORRECTION

Paper No.: _____

DATE : November 2, 2006

TO SPE OF : ART UNIT 2879

SUBJECT : Request for Certificate of Correction for Appl. No.: 10/813204 patent No.: 6,953,375

Please respond to this request for a certificate of correction within 7 days.

Please review the requested changes/corrections as shown in the **COCIN** document(s) in the IFW application image. No new matter should be introduced, nor should the scope or meaning of the claims be changed.

Please complete the response (see below) and forward the completed response to scanning using document code **COCX**.

Magdalene Talley

Certificates of Correction Branch

703-308-9390 ext. 116

Thank You For Your Assistance

The request for issuing the above-identified correction(s) is hereby:

Note your decision on the appropriate box.

- [X] **Approved** — All changes apply.
- [ ] **Approved in Part** — Specify below which changes **do not** apply.
- [ ] **Denied** — State the reasons for denial below.

Comments: _____

MARICELI SANTIAGO
PRIMARY EXAMINER

SPE

2879
Art Unit

PTOL-306 (REV. 7/03)

U.S. DEPARTMENT OF COMMERCE Patent and Trademark Office

UNITED STATES PATENT AND TRADEMARK OFFICE

Commissioner for Patents
United States Patent and Trademark Office
P.O. Box 1450
Alexandria, VA 22313-1450
www.uspto.gov

Daniel M. Chambers
BioTechnology Law Group
658 Marsolan Avenue
Solana Beach, CA 92075-1931

COPY MAILED

DEC 28 2005

OFFICE OF PETITIONS

In re Application of

Hofmann, et al.

Application No. 10/813,209

Filed: March 29, 2004

Attorney Docket No. GTI 1360-3

DECISION ON PETITION

This is a decision on the petition under 37 CFR 1.137(b), filed December 8, 2005, to revive the above-identified application.

The petition is **GRANTED**.

The above-identified application became abandoned for failure to reply to the "Notice of Non-compliant Amendment" mailed May 17, 2005, which set a shortened period for reply of one (1) month from its mailing date. Extensions of time were available pursuant to 37 CFR 1.136(a). No extensions of time were obtained within the allowable period, and no response was received within the allowable period. The application became abandoned on June 18, 2005. A Notice of Abandonment was mailed on November 25, 2005.

The amendment filed December 8, 2005, is noted.

The application is being forwarded to Technology Center 3700, GAU 3742 for further processing. (571) 272-3222.

Kenya A. McLaughlin
Petitions Attorney
Office of Petitions

UNITED STATES PATENT AND TRADEMARK OFFICE

UNITED STATES DEPARTMENT OF COMMERCE
United States Patent and Trademark Office
Address: COMMISSIONER FOR PATENTS
P.O. Box 1450
Alexandria, Virginia 22313-1450
www.uspto.gov

TOWNSEND AND TOWNSEND AND CREW, LLP
TWO EMBARCADERO CENTER
EIGHTH FLOOR
SAN FRANCISCO, CA 94111-3834

Mail Date: 04/21/2010

Applicant	: Takuro Eika	: DECISION ON REQUEST FOR
Patent Number	: 7601055	: RECALCULATION of PATENT
Issue Date	: 10/13/2009	: TERM ADJUSTMENT IN VIEW
Appliction No	: 10/813,211	: OF WYETH AND NOTICE OF INTENT TO
Filed	: 03/29/2004	: ISSUE CERTIFICATE OF CORRECTION
		:

The Request for Recalculation is **GRANTED** to the extent indicated.

The patent term adjustment has been determined to be **842** days. The USPTO will *sua sponte* issue a certificate of correction reflecting the amount of PTA days determined by the recalculation.

Prior to the issuance of the certificate of correction, the USPTO will afford patentee an opportunity to be heard and request reconsideration. Accordingly, patentee has **one month or thirty (30) days**, whichever is longer, to file a request for reconsideration of this patent term adjustment calculation. See 35 U.S.C. 154(b)(3)(B)(ii) and 37 CFR 1.322(a)(4). No extensions of time will be granted under 37 CFR 1.136.

Patentee should use document code PET.OP if electronically filing a request for reconsideration of this patent term adjustment calculation. The patentee must also include the information required by 37 CFR 1.705(b)(2) and the fee required by 37 CFR 1.18(e). If patentee does not file a timely request for reconsideration of this patent term adjustment calculation including the information required by 37 CFR 1.705(b)(2) and the fee required by 37 CFR 1.18(e), the USPTO will issue a certificate of correction reflecting the PTA determination noted above.

Patentee should be aware that in order to preserve the right to review in the United States District Court for the District of Columbia of the USPTO patent term adjustment determination, patentee must ensure that he or she also take the steps required under 35 U.S.C. 154(b)(4)(A) in a timely manner. Nothing in the request for recalculation should be construed as providing an alternative time frame for commencing a civil action under 35 U.S.C. 154(b)(4)(A).

Any questions concerning this decision should be directed to the Office of Patent Legal Administration at 571-272-7702.

UNITED STATES PATENT AND TRADEMARK OFFICE

Commissioner for Patents
United States Patent and Trademark Office
P.O. Box 1450
Alexandria, VA 22313-1450
www.uspto.gov

RADER FISHMAN & GRAUER PLLC
1233 20TH STREET NW, SUITE 501
WASHINGTON DC 20036

COPY MAILED

JAN 16 2008

OFFICE OF PETITIONS

In re Application of :
FURUKAWA, et al. :
Application No. 10/813,215 :
Filed: March 31, 2004 :
Attorney Docket No. **SON-2965** :

DECISION ON PETITION

This is a decision on the petition under 37 CFR 1.137(b), filed March 14, 2007, to revive the above-identified application.

The petition is **GRANTED.**

The application became abandoned for failure to reply in a timely manner to the non-final Office action mailed, April 21, 2006, which set a shortened statutory period for reply of three (3) months. No extensions of time under the provisions of 37 CFR 1.136(a) were obtained. Accordingly, the application became abandoned on July 22, 2006.

The petition satisfies the requirements of 37 CFR 1.137(b) in that petitioner has supplied (1) the reply in the form of an amendment; (2) the petition fee of $1500; and (3) an adequate statement of unintentional delay.

Telephone inquiries concerning this decision should be directed to Monica A. Graves at (571) 272-7253.

The application file is being referred to Technology Center Art Unit 2621 for consideration of the amendment filed March 14, 2007

Sherry D. Brinkley
Petitions Examiner
Office of Petitions

UNITED STATES PATENT AND TRADEMARK OFFICE

UNITED STATES DEPARTMENT OF COMMERCE
United States Patent and Trademark Office
Address: COMMISSIONER FOR PATENTS
P.O. Box 1450
Alexandria, Virginia 22313-1450
www.uspto.gov

APPLICATION NO.	FILING DATE	FIRST NAMED INVENTOR	ATTORNEY DOCKET NO.	CONFIRMATION NO.
10/813,219	03/30/2004	Tatsuhito Mutoh	O11.2-11521-US01	3864

490 7590 03/15/2005

VIDAS, ARRETT & STEINKRAUS, P.A.
6109 BLUE CIRCLE DRIVE
SUITE 2000
MINNETONKA, MN 55343-9185

EXAMINER
MARCHESCHI, MICHAEL A

ART UNIT	PAPER NUMBER
1755	

DATE MAILED: 03/15/2005

Please find below and/or attached an Office communication concerning this application or proceeding.

UNITED STATES PATENT AND TRADEMARK OFFICE

Commissioner for Patents
United States Patent and Trademark Office
P.O. Box 1450
Alexandria, VA 22313-1450
www.uspto.gov

MAR 1 5 2005

In re Application of	:	
Tatsuhito Mutoh, et al.	:	NOTICE OF WITHDRAWAL
Serial No. 10/813,219	:	FROM ISSUE
Filed: March 30, 2004	:	UNDER 37 CFR 1.313(b)
For: POLISHING COMPOUNDS	:	

The above-identified application is withdrawn from issue after payment of the issue fee due to reopening of prosecution. See 37 CFR 1.313 (b).

The above-identified application is hereby withdrawn from issue.

The issue fee is refundable upon written request. If, however, the application is again found allowable, the issue fee can be applied toward payment of the issue fee in the amount identified on the new Notice of Allowance and Issue Fee Due upon written request. This request and any balance due must be received on or before the due date noted in the new Notice of Allowance in order to prevent abandonment of the application.

Telephone inquiries should be directed to Jerry Lorengo at (571) 272-1233.

The above-identified application is being forwarded to the examiner for prompt appropriate action, including notifying applicant of the new status of this application.

JMStone

Jacqueline Stone, Director
Technology Center 1700
Chemical and Materials Engineering

VIDAS, ARRETT & STEINKRAUS, P. A.
6109 Blue Circle Drive
Suite 2000
Minnetonka, MN 55343-9185

UNITED STATES PATENT AND TRADEMARK OFFICE

Commissioner for Patents
United States Patent and Trademark Office
P.O. Box 1450
Alexandria, VA 22313-1450
www.uspto.gov

STERNE, KESSLER, GOLDSTEIN & FOX P.L.L.C.
1100 NEW YORK AVENUE, N.W.
WASHINGTON DC 20005

COPY MAILED
SEP 23 2008

In re Application of	:	
Abbas Amirichimeh, et al.	:	
Application No. 10/813,235	:	DECISION GRANTING PETITION
Filed: March 31, 2004	:	UNDER 37 CFR 1.313(c)(2)
Attorney Docket No. 1875.5630000	:	

This is a decision on the petition under 37 CFR 1.313(c)(2), filed September 22, 2008, to withdraw the above-identified application from issue after payment of the issue fee.

The petition is **GRANTED**.

The above-identified application is withdrawn from issue for consideration of a submission under 37 CFR 1.114 (request for continued examination). *See* 37 CFR 1.313(c)(2).

Petitioner is advised that the issue fee paid on August 8, 2008 cannot be refunded. If, however, this application is again allowed, petitioner may request that it be applied towards the issue fee required by the new Notice of Allowance.[1]

Telephone inquiries should be directed to Terri Williams at (571) 272-2991.

This application is being referred to Technology Center AU 2611 for processing of the request for continued examination under 37 CFR 1.114 and for consideration of the concurrently filed information disclosure statement.

Terri Williams
Petitions Examiner
Office of Petitions

---

[1] *The request to apply the issue fee to the new Notice may be satisfied by completing and returning the new Part B – Fee(s) Transmittal Form (along with any balance due at the time of submission). Petitioner is advised that the Issue Fee Transmittal Form* ***must*** *be completed and timely submitted to avoid abandonment of the application.*

UNITED STATES PATENT AND TRADEMARK OFFICE

Commissioner for Patents
United States Patent and Trademark Office
P.O. Box 1450
Alexandria, VA 22313-1450
www.uspto.gov

STERNE, KESSLER, GOLDSTEIN & FOX, PLLC
1100 NEW YORK AVENUE, N.W.
WASHINGTON, DC 20005

MAILED

JAN 30 2009

OFFICE OF PETITIONS

In re Application of	:	
Abbas Amirichimeh, et al.	:	
Application No. 10/813,235	:	DECISION GRANTING PETITION
Filed: March 31, 2004	:	UNDER 37 CFR 1.313(c)(2)
Attorney Docket No. 1875.5630000	:	

This is a decision on the petition under 37 CFR 1.313(c)(2), filed January 28, 2009, to withdraw the above-identified application from issue after payment of the issue fee.

The petition is **GRANTED**.

The above-identified application is withdrawn from issue for consideration of a submission under 37 CFR 1.114 (request for continued examination). *See* 37 CFR 1.313(c)(2).

Petitioner is advised that the issue fee paid on January 5, 2009 cannot be refunded. If, however, this application is again allowed, petitioner may request that it be applied towards the issue fee required by the new Notice of Allowance.[1]

Telephone inquiries regarding this decision should be directed to undersigned at (571) 272-1642.

This application is being referred to Technology Center AU 2611 for processing of the request for continued examination under 37 CFR 1.114 and for consideration of the concurrently filed information disclosure statement.

/AMW/
April M. Wise
Petitions Examiner
Office of Petitions

---

[1] *The request to apply the issue fee to the new Notice may be satisfied by completing and returning the new Part B – Fee(s) Transmittal Form (along with any balance due at the time of submission). Petitioner is advised that the Issue Fee Transmittal Form must be completed and timely submitted to avoid abandonment of the application.*

UNITED STATES PATENT AND TRADEMARK OFFICE

Commissioner for Patents
United States Patent and Trademark Office
P.O. Box 1450
Alexandria, VA 22313-1450
www.uspto.gov

STERNE, KESSLER, GOLDSTEIN & FOX P.L.L.C.
1100 NEW YORK AVENUE, N.W.
WASHINGTON, DC 20005

MAILED

APR 22 2009

OFFICE OF PETITIONS

In re Application of	:	
Hung-Ming Chien	:	
Application No. 10/813,266	:	DECISION GRANTING PETITION
Filed: March 31, 2004	:	UNDER 37 CFR 1.313(c)(2)
Attorney Docket No. 2875.2890000	:	

This is a decision on the petition under 37 CFR 1.313(c)(2), filed April 20, 2009, to withdraw the above-identified application from issue after payment of the issue fee.

The petition is **GRANTED**.

The above-identified application is withdrawn from issue for consideration of a submission under 37 CFR 1.114 (request for continued examination). *See* 37 CFR 1.313(c)(2).

Petitioner is advised that the issue fee paid on April 6, 2009 cannot be refunded. If, however, this application is again allowed, petitioner may request that it be applied towards the issue fee required by the new Notice of Allowance.[1]

Telephone inquiries regarding this decision should be directed to undersigned at (571) 272-1642. All other inquiries regarding the examination or status of this application should be directed to the Technology Center.

This application is being referred to Technology Center AU 2618 for processing of the request for continued examination under 37 CFR 1.114 and for consideration of the concurrently filed information disclosure statement.

/AMW/
April M. Wise
Petitions Examiner
Office of Petitions

---

[1] *The request to apply the issue fee to the new Notice may be satisfied by completing and returning the new Part B – Fee(s) Transmittal Form (along with any balance due at the time of submission). Petitioner is advised that the Issue Fee Transmittal Form* ***must*** *be completed and timely submitted to avoid abandonment of the application.*

UNITED STATES PATENT AND TRADEMARK OFFICE

UNITED STATES DEPARTMENT OF COMMERCE
United States Patent and Trademark Office
Address: COMMISSIONER FOR PATENTS
P.O. Box 1450
Alexandria, Virginia 22313-1450
www.uspto.gov

STERNE, KESSLER, GOLDSTEIN & FOX P.L.L.C.
1100 NEW YORK AVENUE, N.W.
WASHINGTON, DC 20005

Mail Date: 04/21/2010

Applicant	: Hung-Ming Chien	: DECISION ON REQUEST FOR
Patent Number	: 7599677	: RECALCULATION of PATENT
Issue Date	: 10/06/2009	: TERM ADJUSTMENT IN VIEW
Appliction No	: 10/813,266	: OF WYETH AND NOTICE OF INTENT TO
Filed	: 03/31/2004	: ISSUE CERTIFICATE OF CORRECTION
		:

The Request for Recalculation is **GRANTED** to the extent indicated.

The patent term adjustment has been determined to be **1099** days. The USPTO will *sua sponte* issue a certificate of correction reflecting the amount of PTA days determined by the recalculation.

Prior to the issuance of the certificate of correction, the USPTO will afford patentee an opportunity to be heard and request reconsideration. Accordingly, patentee has **one month or thirty (30) days**, whichever is longer, to file a request for reconsideration of this patent term adjustment calculation. See 35 U.S.C. 154(b)(3)(B)(ii) and 37 CFR 1.322(a)(4). No extensions of time will be granted under 37 CFR 1.136.

Patentee should use document code PET.OP if electronically filing a request for reconsideration of this patent term adjustment calculation. The patentee must also include the information required by 37 CFR 1.705(b)(2) and the fee required by 37 CFR 1.18(e). If patentee does not file a timely request for reconsideration of this patent term adjustment calculation including the information required by 37 CFR 1.705(b)(2) and the fee required by 37 CFR 1.18(e), the USPTO will issue a certificate of correction reflecting the PTA determination noted above.

Patentee should be aware that in order to preserve the right to review in the United States District Court for the District of Columbia of the USPTO patent term adjustment determination, patentee must ensure that he or she also take the steps required under 35 U.S.C. 154(b)(4)(A) in a timely manner. Nothing in the request for recalculation should be construed as providing an alternative time frame for commencing a civil action under 35 U.S.C. 154(b)(4)(A).

Any questions concerning this decision should be directed to the Office of Patent Legal Administration at 571-272-7702.

UNITED STATES PATENT AND TRADEMARK OFFICE

UNITED STATES DEPARTMENT OF COMMERCE
United States Patent and Trademark Office
Address: COMMISSIONER FOR PATENTS
P.O. Box 1450
Alexandria, Virginia 22313-1450
www.uspto.gov

STERNE, KESSLER, GOLDSTEIN & FOX P.L.L.C.
1100 NEW YORK AVENUE, N.W.
WASHINGTON, DC 20005

Mail Date: 04/21/2010

Applicant	: Meng-An Pan	: DECISION ON REQUEST FOR
Patent Number	: 7603098	: RECALCULATION of PATENT
Issue Date	: 10/13/2009	: TERM ADJUSTMENT IN VIEW
Appliction No	: 10/813,270	: OF WYETH AND NOTICE OF INTENT TO
Filed	: 03/31/2004	: ISSUE CERTIFICATE OF CORRECTION
		:

The Request for Recalculation is **GRANTED** to the extent indicated.

The patent term adjustment has been determined to be **1189** days. The USPTO will *sua sponte* issue a certificate of correction reflecting the amount of PTA days determined by the recalculation.

Prior to the issuance of the certificate of correction, the USPTO will afford patentee an opportunity to be heard and request reconsideration. Accordingly, patentee has **one month or thirty (30) days**, whichever is longer, to file a request for reconsideration of this patent term adjustment calculation. See 35 U.S.C. 154(b)(3)(B)(ii) and 37 CFR 1.322(a)(4). No extensions of time will be granted under 37 CFR 1.136.

Patentee should use document code PET.OP if electronically filing a request for reconsideration of this patent term adjustment calculation. The patentee must also include the information required by 37 CFR 1.705(b)(2) and the fee required by 37 CFR 1.18(e). If patentee does not file a timely request for reconsideration of this patent term adjustment calculation including the information required by 37 CFR 1.705(b)(2) and the fee required by 37 CFR 1.18(e), the USPTO will issue a certificate of correction reflecting the PTA determination noted above.

Patentee should be aware that in order to preserve the right to review in the United States District Court for the District of Columbia of the USPTO patent term adjustment determination, patentee must ensure that he or she also take the steps required under 35 U.S.C. 154(b)(4)(A) in a timely manner. Nothing in the request for recalculation should be construed as providing an alternative time frame for commencing a civil action under 35 U.S.C. 154(b)(4)(A).

Any questions concerning this decision should be directed to the Office of Patent Legal Administration at 571-272-7702.

UNITED STATES PATENT AND TRADEMARK OFFICE

UNITED STATES DEPARTMENT OF COMMERCE
United States Patent and Trademark Office
Address: COMMISSIONER FOR PATENTS
P.O. Box 1450
Alexandria, Virginia 22313-1450
www.uspto.gov

STERNE, KESSLER, GOLDSTEIN & FOX P.L.L.C.
1100 NEW YORK AVENUE, N.W.
WASHINGTON, DC 20005

Mail Date: 05/18/2010

Applicant : Meng-An Pan
Patent Number : 7603098
Issue Date : 10/13/2009
Application No : 10/813,270
Filed : 03/31/2004

: NOTICE CONCERNING IMPROPER
: CALCULATION OF PATENT TERM
: ADJUSTMENT BASED UPON USPTO
: IMPROPERLY MEASURING REDUCTION
: PERIOD UNDER 37 CFR 1.704(c)(10).

The United States Patent and Trademark Office (USPTO) discovered that in processing the recent recalculation decisions mailed in response to patentee's filed Request for Recalculation of Patent Term Adjustment in view of Wyeth, the USPTO improperly measured the reduction period for reductions under 37 CFR 1.704(c)(10). Pursuant to 37 CFR 1.704(c)(10), patentee's reduction begins on the date of filing the amendment under 37 CFR 1.312 ("1.312 amendment") or other related paper and ends on the date that the Office mails a response to the filing of the 1.312 amendment or other paper. It has been discovered that during the recalculation, the calculation failed to the limit the reduction to the mail date of the response to the 1.312 amendment or other paper. Accordingly, patentee's reductions were greater than warranted.

This notice **VACATES** the previous GRANTED request for recalculation and provides patentee with a revised GRANTED recalculation.

The patent term adjustment has been determined to be **1235** days. The USPTO will *sua sponte* issue a certificate of correction reflecting the amount of patent term adjustment (PTA) days determined by the recalculation.

Prior to the issuance of the certificate of correction, the USPTO will afford patentee an opportunity to be heard and request reconsideration. Accordingly, patentee has **one month or thirty (30) days** from the mail date of this notice, whichever is longer, to file a request for reconsideration of this PTA calculation. See 35 U.S.C. § 154(b)(3)(B)(ii) and 37 CFR 1.322(a)(4).

Patentee should use document code PET.OP if electronically filing a request for reconsideration of this PTA calculation. The patentee must also include the information required by 37 CFR 1.705(b)(2), and the fee required by 37 CFR 1.18(e). If patentee does not file a timely request for reconsideration of this PTA calculation, including the information required by 37 CFR 1.705(b)(2) and the fee required by 37 CFR 1.18(e), the USPTO will issue a certificate of correction reflecting the PTA determination noted above.

Patentee should be aware that in order to preserve the right of review of the USPTO's PTA determination in the United States District Court for the District of Columbia, patentee must ensure that the steps required under 35 U.S.C. § 154 (b)(4) are taken in a timely manner. Nothing in the request for recalculation should be construed as providing an alternative time frame for commencing a civil action under 35 U.S.C. § 154(b)(4).

UNITED STATES PATENT AND TRADEMARK OFFICE

UNITED STATES DEPARTMENT OF COMMERCE
United States Patent and Trademark Office
Address: COMMISSIONER FOR PATENTS
P.O. Box 1450
Alexandria, Virginia 22313-1450
www.uspto.gov

MINTZ, LEVIN, COHN, FERRIS, GLOVSKY AND POPEO, P.C
ONE FINANCIAL CENTER
BOSTON, MA 02111

Mail Date: 07/26/2010

Applicant	: Kalle Tammi	: DECISION ON REQUEST FOR
Patent Number	: 7650149	: RECALCULATION of PATENT
Issue Date	: 01/19/2010	: TERM ADJUSTMENT IN VIEW
Application No	: 10/813,277	: OF WYETH AND NOTICE OF INTENT TO
Filed	: 03/31/2004	: ISSUE CERTIFICATE OF CORRECTION
		:

The Request for Recalculation is **GRANTED** to the extent indicated.

The patent term adjustment has been determined to be **966** days. The USPTO will *sua sponte* issue a certificate of correction reflecting the amount of PTA days determined by the recalculation.

Prior to the issuance of the certificate of correction, the USPTO will afford patentee an opportunity to be heard and request reconsideration. Accordingly, patentee has **one month or thirty (30) days**, whichever is longer, to file a request for reconsideration of this patent term adjustment calculation. See 35 U.S.C. 154(b)(3)(B)(ii) and 37 CFR 1.322(a)(4). No extensions of time will be granted under 37 CFR 1.136.

Patentee should use document code PET.OP if electronically filing a request for reconsideration of this patent term adjustment calculation. The patentee must also include the information required by 37 CFR 1.705(b)(2) and the fee required by 37 CFR 1.18(e). If patentee does not file a timely request for reconsideration of this patent term adjustment calculation including the information required by 37 CFR 1.705(b)(2) and the fee required by 37 CFR 1.18(e), the USPTO will issue a certificate of correction reflecting the PTA determination noted above.

Patentee should be aware that in order to preserve the right to review in the United States District Court for the District of Columbia of the USPTO patent term adjustment determination, patentee must ensure that he or she also take the steps required under 35 U.S.C. 154(b)(4)(A) in a timely manner. Nothing in the request for recalculation should be construed as providing an alternative time frame for commencing a civil action under 35 U.S.C. 154(b)(4)(A).

Any questions concerning this decision should be directed to the Office of Patent Legal Administration at 571-272-7702.

UNITED STATES PATENT AND TRADEMARK OFFICE

Commissioner for Patents
United States Patent and Trademark Office
P.O. Box 1450
Alexandria, VA 22313-1450
www.uspto.gov

MAILED

FEB 19 2010

OFFICE OF PETITIONS

CHA & REITER, LLC
210 ROUTE 4 EAST STE 103
PARAMUS, NJ 07652

In re Patent No. 7,576,730 :
Issue Date: August 18, 2009 :
Application No. 10/813,285 : NOTICE
Filed: March 29, 2004 :
Attorney Docket No. 5000-1-1279

This is a notice regarding your request for acceptance of a fee deficiency submission under 37 CFR 1.28. On September 1, 1998, the Court of Appeals for the Federal Circuit held that 37 CFR 1.28(c) is the sole provision governing the time for correction of the erroneous payment of the issue fee as a small entity. **See DH Technology v. Synergystex International, Inc. 154 F.3d 1333, 47 USPQ2d 1865 (Fed. Cir. Sept. 1, 1998).**

The Office no longer investigates or rejects original or reissue applications under 37 CFR 1.56. **1098 Off. Gaz. Pat. Office 502 (January 3, 1989)**. Therefore, nothing in this Notice is intended to imply that an investigation was done.

Your fee deficiency submission under 37 CFR 1.28 is hereby **ACCEPTED**.

Inquiries related to this communication should be directed to Irvin Dingle at (571) 272-3210.

Irvin Dingle
Petitions Examiner
Office of Petitions

UNITED STATES PATENT AND TRADEMARK OFFICE

Commissioner for Patents
United States Patent and Trademark Office
P.O. Box 1450
Alexandria, VA 22313-1450
www.uspto.gov

Townsend and Townsend and Crew, LLP
Two Embarcadero Center
Eighth Floor
San Francisco, CA 94111-3834

COPY MAILED
SEP 0 5 2006
OFFICE OF PETITIONS

In re Application of	:	
Jonathan Castle et al.	:	
Application No. 10/813,288	:	DECISION ON PETITION
Filed: March 29, 2004	:	TO WITHDRAW
Attorney Docket No. 022048-000100US	:	FROM RECORD
	:	

This is a decision on the Request to Withdraw as attorney or agent of record under 37 C.F.R. § 1.36(b), filed April 19, 2006.

The request is **NOT APPROVED**.

A grantable request to withdraw as attorney/agent of record must be signed by every attorney/agent seeking to withdraw or contain a clear indication that one attorney is signing on behalf of another/others. A request to withdraw will not be approved unless at least 30 (thirty) days would remain between the date of approval and the later of the expiration date of a time to file a response or the expiration date of the maximum time period which can be extended under 37 C.F.R. § 1.136(a).

The Office cannot approve the request at this time since the reasons provided do not meet any of the conditions under the mandatory or permissive categories enumerated in 37 CFR 10.40. Section 10.40 of Title 37 of the Code of Federal Regulation states, "[a] practitioner shall not withdraw from employment in a proceeding before the Office without permission from the Office[.]" More specifically, 37 CFR 10.40 states, "[i]f paragraph (b) of this section is not applicable, a practitioner may not request permission to withdraw in matter pending before the Office unless such request or such withdrawal is" for one the permissive reasons listed in 37 CFR 10.40(c). The reasons set forth in the request, **discontinuation of attorney/client relationship**, do not meet any the conditions set forth in 37 CFR 10.40.

All future communications from the Office will continue to be directed to the above-listed address until otherwise notified by applicant.

Telephone inquiries concerning this decision should be directed to Terri Williams at 571-272- 2991.

David Bucci
Petitions Examiner
Office of Petitions

cc: Kevin LeMond at Schwabe
Williamson & Wyatt
1211 SW 5th Avenue
Suites 1600-1900
Portland, OR 97204

UNITED STATES PATENT AND TRADEMARK OFFICE

Commissioner for Patents
United States Patent and Trademark Office
P.O. Box 1450
Alexandria, VA 22313-1450
www.uspto.gov

BARNES & THORNBURG
11 SOUTH MERIDIAN
INDIANAPOLIS IN 46204

COPY MAILED

FEB 08 2005

OFFICE OF PETITIONS

In re Application of
Gregory C. Moser et al.
Application No. 10/813,297
Filed: March 30, 2004
Attorney Docket Number: 20341-73310

ON PETITION

This is a decision on the petition filed October 27, 2004, requesting that the above-identified application be accorded a filing date of March 30, 2004, instead of the presently accorded filing date of March 29, 2004.

Petitioners request the later filing date on the basis that the application was deposited in Express Mail service on March 30, 2004, pursuant to the requirements of 37 CFR 1.10(d).

Petitioners acknowledge that the date of the deposit in Express Mail shown on petitioners' Express Mail receipt is March 29, 2004, but argue that the application was actually deposited with the USPS on March 30, 2004.

In support, petitioners have provided a copy of Express Mail Customer label No. EL735255393US (the same Express Mail number appearing on the itemized transmittal sheet accompanying the original application papers located in the Official file) showing a "date-in" of March 29, 2004, a copy of information found in the USPS Internet Track & Confirm Database and a certificate of Express Mail. The evidence from the USPS Internet Track & Confirm Database corroborates that an item bearing Express Mail Label No. EL735255393US was "enroute" on March 30, 2004 and not March 29, 2004. In view thereof, it is concluded that the correct date of deposit in Express Mail service is March 30, 2004. Therefore, the application is entitled to a filing date of March 30, 2004. Petitioner should note that there is no requirement of 37 CFR 1.10(d) for a certificate of mailing by "Express Mail",[1]

The petition is **GRANTED**. In view thereof, no petition fee is due and none has been charged.

---

[1] See 1174 O.G. Pat. Of. 92 (May 16, 1995).

The application is being returned to Office of Initial Patent Examination for further processing with a filing date of March 30, 2004, not March 29, 2004.

Telephone inquiries related to this matter should be directed to the undersigned Petitions Attorney at (571) 272-3212.

Patricia Faison-Ball
Senior Petitions Attorney
Office of Petitions

UNITED STATES PATENT AND TRADEMARK OFFICE

OFFICE

SERIAL NUMBER	FILING DATE	FIRST NAMED APPLICANT	ATTORNEY DOCKET NO.
10813297	03/30/04	MOSER, GREGORY C.	20341-73310

BARNES & THORNBURG LLP
11 SOUTH MERIDIAN
INDIANAPOLIS IN 46204

EXAMINER	
THOMPSON, HUGH	
ART UNIT	PAPER NUMBER
3634	

DATE MAILED: 9/10/07

NOTICE OF RESCINDED ABANDONMENT

☐ **In response to your communication filed** 2/13/06

☒ **Through inadvertence, a Notice of Abandonment was mailed in the above-identified application. The Notice of Abandonment is hereby rescinded.**

For Cheryl McBride
Manager, Publications Division
Office of Patent Publication
571-272-4200

UNITED STATES PATENT AND TRADEMARK OFFICE

Commissioner for Patents
United States Patent and Trademark Office
P.O. Box 1450
Alexandria, VA 22313-1450
www.uspto.gov

OLIFF & BERRIDGE PLC
P O BOX 19928
ALEXANDRIA, VA 22320

COPY MAILED
SEP 13 2006
OFFICE OF PETITIONS

In re Application of
Shigeki Miyashita
Application No. 10/813,302
Filed: March 31, 2004
Attorney Docket No. 119315

DECISION GRANTING PETITION
UNDER 37 CFR 1.313(c)(2)

This is a decision on the petition, filed September 11, 2006, under 37 CFR 1.313(c)(2) to withdraw the above-identified application from issue after payment of the issue fee.

The petition is **GRANTED**.

The above-identified application is withdrawn from issue for consideration of a submission under 37 CFR 1.114 (request for continued examination). See 37 CFR 1.313(c)(2).

Petitioner is advised that the issue fee paid on July 25, 2006 in the above-identified application cannot be refunded. If, however, the above-identified application is again allowed, petitioner may request that it be applied towards the issue fee required by the new Notice of Allowance.[1]

Telephone inquiries should be directed to the undersigned at (571) 272-3218.

This matter is being referred to Technology Center AU 3747 for processing of the request for continued examination under 37 CFR 1.114 and for consideration of the Information Disclosure Statement.

Frances Hicks
Petitions Examiner
Office of Petitions

C:\Documents and Settings\FHicks\My Documents\470\Sept9\813302.wpd

---

[1] *The request to apply the issue fee to the new Notice may be satisfied by completing and returning the new Part B – Fee(s) Transmittal Form (along with any balance due at the time of submission). Petitioner is advised that the Issue Fee Transmittal Form must be completed and timely submitted to avoid abandonment.*

ARG

SPE RESPONSE FOR CERTIFICATE OF CORRECTION

Paper No.:20070515

DATE : May 15, 2007

TO SPE OF : ART UNIT 3732

SUBJECT : Request for Certificate of Correction on Patent No.: 7,074,040

A response is requested with respect to the accompanying request for a certificate of correction.

Please complete this form and return with file, within **7** days to:
Certificates of Correction Branch - PK 3-910
Palm location **7590** - Tel. No. 305-8201

With respect to the change(s) requested, correcting Office and/or Applicant's errors, should the patent read as shown in the certificate of correction? No new matter should be introduced, nor should the scope or meaning of the claims be changed.

Thank You For Your Assistance **Certificates of Correction Branch**

The request for issuing the above-identified correction(s) is hereby:
Note your decision on the appropriate box.

☒ **Approved** **All** changes apply.

☐ **Approved in Part** Specify below which changes **do not** apply.

☐ **Denied** State the reasons for denial below.

Comments:

Chris A Rodriguez

SPE: Chris Rodriguez **Art Unit** 3732

UNITED STATES PATENT AND TRADEMARK OFFICE

UNITED STATES DEPARTMENT OF COMMERCE
United States Patent and Trademark Office
Address: COMMISSIONER FOR PATENTS
P.O. Box 1450
Alexandria, Virginia 22313-1450
www.uspto.gov

Pearl Cohen Zedek Latzer, LLP
1500 Broadway
12th Floor
New York, NY 10036

Mail Date: 06/30/2010

Applicant	: David A. Dinsmoor	: DECISION ON REQUEST FOR
Patent Number	: 7654985	: RECALCULATION of PATENT
Issue Date	: 02/02/2010	: TERM ADJUSTMENT IN VIEW
Application No	: 10/813,307	: OF WYETH AND NOTICE OF INTENT TO
Filed	: 03/30/2004	: ISSUE CERTIFICATE OF CORRECTION
		:

The Request for Recalculation is **GRANTED** to the extent indicated.

The patent term adjustment has been determined to be **279** days. The USPTO will *sua sponte* issue a certificate of correction reflecting the amount of PTA days determined by the recalculation.

Prior to the issuance of the certificate of correction, the USPTO will afford patentee an opportunity to be heard and request reconsideration. Accordingly, patentee has **one month or thirty (30) days**, whichever is longer, to file a request for reconsideration of this patent term adjustment calculation. See 35 U.S.C. 154(b)(3)(B)(ii) and 37 CFR 1.322(a)(4). No extensions of time will be granted under 37 CFR 1.136.

Patentee should use document code PET.OP if electronically filing a request for reconsideration of this patent term adjustment calculation. The patentee must also include the information required by 37 CFR 1.705(b)(2) and the fee required by 37 CFR 1.18(e). If patentee does not file a timely request for reconsideration of this patent term adjustment calculation including the information required by 37 CFR 1.705(b)(2) and the fee required by 37 CFR 1.18(e), the USPTO will issue a certificate of correction reflecting the PTA determination noted above.

Patentee should be aware that in order to preserve the right to review in the United States District Court for the District of Columbia of the USPTO patent term adjustment determination, patentee must ensure that he or she also take the steps required under 35 U.S.C. 154(b)(4)(A) in a timely manner. Nothing in the request for recalculation should be construed as providing an alternative time frame for commencing a civil action under 35 U.S.C. 154(b)(4)(A).

Any questions concerning this decision should be directed to the Office of Patent Legal Administration at 571-272-7702.

UNITED STATES PATENT AND TRADEMARK OFFICE

Commissioner for Patents
United States Patent and Trademark Office
P.O. Box 1450
Alexandria, VA 22313-1450
www.uspto.gov

MARK KRIETZMAN
P.O. BOX 3185
PALOS VERDES, CA 90274

COPY MAILED

JUL 0 6 2006

OFFICE OF PETITIONS

In re Application of	:	
Krietzman, Mark Howard	:	
Application No. 10/813,333	:	ON PETITION
Filed: March 29, 2004	:	
Attorney Docket No. CHIWORKS STICK 01	:	

This is a decision on the petition under 37 C.F.R. § 1.137(b), filed May 15, 2006, to revive the above-identified application.

The petition is **GRANTED.**

The petition satisfies the conditions for revival pursuant to the provisions of 37 CFR 1.137(b) in that (1) the reply in the form of payment of the issue and publication fees; (2) the petition fee; and (3) the required statement of unintentional delay have been received. Accordingly, the response has been accepted as having been unintentionally delayed.

There is no indication that the person signing the instant petition was ever given a power of attorney or authorization of agent to prosecute the above-identified application. If the person signing the instant petition desires to receive future correspondence regarding this application, the appropriate power of attorney or authorization of agent must be submitted. While a courtesy copy of this decision is being mailed to the person signing the instant petition, all future correspondence will be directed solely to the address currently of record until such time as appropriate instructions are received to the contrary.

There is no indication that petitioner has submitted an Issue Fee Transmittal Form (PTOL-85b). Accordingly, if petitioner desires to have the information normally found thereon printed on the patent, the attached blank Issue Fee Transmittal Form should be completed and returned to the Publishing Division within **ONE MONTH** from the mail date of this decision.

This matter is being referred to the Publishing Division for processing into a patent.

Telephone inquiries regarding this decision should be directed to the undersigned at (571) 272-3282.

Liana Chase
Petitions Examiner
Office of Petitions

Enclosure:

PTOL-85b

Cc:

GREENBERG TRAURIG LLP
2450 COLORADO AVENUE, SUITE 400E
SANTA MONICA, CA 90404

PART B - FEE(S) TRANSMITTAL

Complete and send this form, together with applicable fee(s), to: Mail **Mail Stop ISSUE FEE**
Commissioner for Patents
P.O. Box 1450
Alexandria, Virginia 22313-1450
or Fax (571) 273-2885

INSTRUCTIONS: This form should be used for transmitting the ISSUE FEE and PUBLICATION FEE (if required). Blocks 1 through 5 should be completed where appropriate. All further correspondence including the Patent, advance orders and notification of maintenance fees will be mailed to the current correspondence address as indicated unless corrected below or directed otherwise in Block 1, by (a) specifying a new correspondence address; and/or (b) indicating a separate "FEE ADDRESS" for maintenance fee notifications.

CURRENT CORRESPONDENCE ADDRESS (Note: Use Block 1 for any change of address)

Note: A certificate of mailing can only be used for domestic mailings of the Fee(s) Transmittal. This certificate cannot be used for any other accompanying papers. Each additional paper, such as an assignment or formal drawing, must have its own certificate of mailing or transmission.

Certificate of Mailing or Transmission

I hereby certify that this Fee(s) Transmittal is being deposited with the United States Postal Service with sufficient postage for first class mail in an envelope addressed to the Mail Stop ISSUE FEE address above, or being facsimile transmitted to the USPTO (571) 273-2885, on the date indicated below.

(Depositor's name)
(Signature)
(Date)

APPLICATION NO.	FILING DATE	FIRST NAMED INVENTOR	ATTORNEY DOCKET NO.	CONFIRMATION NO.

TITLE OF INVENTION:

APPLN. TYPE	SMALL ENTITY	ISSUE FEE	PUBLICATION FEE	TOTAL FEE(S) DUE	DATE DUE

EXAMINER	ART UNIT	CLASS-SUBCLASS

1. Change of correspondence address or indication of "Fee Address" (37 CFR 1.363).

☐ Change of correspondence address (or Change of Correspondence Address form PTO/SB/122) attached.

☐ "Fee Address" indication (or "Fee Address" Indication form PTO/SB/47; Rev 03-02 or more recent) attached. **Use of a Customer Number is required.**

2. For printing on the patent front page, list

(1) the names of up to 3 registered patent attorneys or agents OR, alternatively,

(2) the name of a single firm (having as a member a registered attorney or agent) and the names of up to 2 registered patent attorneys or agents. If no name is listed, no name will be printed.

1 _____

2 _____

3 _____

3. ASSIGNEE NAME AND RESIDENCE DATA TO BE PRINTED ON THE PATENT (print or type)

PLEASE NOTE: Unless an assignee is identified below, no assignee data will appear on the patent. If an assignee is identified below, the document has been filed for recordation as set forth in 37 CFR 3.11. Completion of this form is NOT a substitute for filing an assignment.

(A) NAME OF ASSIGNEE (B) RESIDENCE: (CITY and STATE OR COUNTRY)

Please check the appropriate assignee category or categories (will not be printed on the patent) : ☐ Individual ☐ Corporation or other private group entity ☐ Government

4a. The following fee(s) are enclosed:

☐ Issue Fee

☐ Publication Fee (No small entity discount permitted)

☐ Advance Order - # of Copies _____

4b. Payment of Fee(s):

☐ A check in the amount of the fee(s) is enclosed.

☐ Payment by credit card. Form PTO-2038 is attached.

☐ The Director is hereby authorized by charge the required fee(s), or credit any overpayment, to Deposit Account Number _____ (enclose an extra copy of this form).

5. **Change in Entity Status** (from status indicated above)

☐ a. Applicant claims SMALL ENTITY status. See 37 CFR 1.27.

☐ b. Applicant is no longer claiming SMALL ENTITY status. See 37 CFR 1.27(g)(2).

The Director of the USPTO is requested to apply the Issue Fee and Publication Fee (if any) or to re-apply any previously paid issue fee to the application identified above.
NOTE: The Issue Fee and Publication Fee (if required) will not be accepted from anyone other than the applicant; a registered attorney or agent; or the assignee or other party in interest as shown by the records of the United States Patent and Trademark Office.

Authorized Signature _____ Date _____

Typed or printed name _____ Registration No. _____

This collection of information is required by 37 CFR 1.311. The information is required to obtain or retain a benefit by the public which is to file (and by the USPTO to process) an application. Confidentiality is governed by 35 U.S.C. 122 and 37 CFR 1.14. This collection is estimated to take 12 minutes to complete, including gathering, preparing, and submitting the completed application form to the USPTO. Time will vary depending upon the individual case. Any comments on the amount of time you require to complete this form and/or suggestions for reducing this burden, should be sent to the Chief Information Officer, U.S. Patent and Trademark Office, U.S. Department of Commerce, P.O. Box 1450, Alexandria, Virginia 22313-1450. DO NOT SEND FEES OR COMPLETED FORMS TO THIS ADDRESS. SEND TO: Commissioner for Patents, P.O. Box 1450, Alexandria, Virginia 22313-1450.

Under the Paperwork Reduction Act of 1995, no persons are required to respond to a collection of information unless it displays a valid OMB control number.

UNITED STATES PATENT AND TRADEMARK OFFICE

Commissioner for Patents
United States Patent and Trademark Office
P.O. Box 1450
Alexandria, VA 22313-1450
www.uspto.gov

KODA & ANDROLIA
2029 CENTURY PARK EAST
SUITE 1140
LOS ANGELES CA 90067

COPY MAILED
SEP 27 2006
OFFICE OF PETITIONS

In re Application of :
Tomio Satoh :
Application No. 10/813,342 : ON PETITION
Filed: March 30, 2004 :
Attorney Docket Number: 172A 3559 :
Title of Invention: Emitter Coupled Logic Oscillator Circuit :

This is a decision on the petition filed August 1, 2006, under 37 CFR 1.137(b) to revive the above-identified application. Petitioner has also requested that the petition be treated under 37 CFR 1.181.

The petition to withdraw the holding of abandonment is **GRANTED**.

The petition under 37 CFR 1.137(b) is **DISMISSED AS MOOT**.

This application was held abandoned on March 23, 2006 for failure to timely submit the issue fee, as required by the Notice of Allowance and Issue Fee Due which was mailed December 22, 2005 and set a 3 month statutory period for reply. Petitioner was informed of the above-identified application's abandonment by a Notice of Abandonment mailed on May 8, 2006.

Petitioner maintains the issue fee transmittal authorizing the payment of the issue fee was submitted on March 22, 2006. In support, Petitioner provided a copy of the Issue Fee Transmittal Form (PTOL-85) which has a certificate of mailing date of March 22, 2006. Pursuant 37 CFR 1.8 the Issue Fee Transmittal Form will be treated as having been received timely. Based on the facts as stated in the instant petition, and the corroborative evidence provided, it is concluded that the holding of abandonment was improperly imposed.

The Notice of Abandonment is hereby vacated and the holding of abandonment withdrawn.

Since the petition has been granted under 37 CFR §1.181, the Petitioner's request to have the petition considered under 37 CFR §1.137(b) is **dismissed as moot**. No petition fee is required for a petition to withdraw the holding of abandonment under 37 CFR §1.181.

This application is being forwarded to the Office of Patent Publication for processing into a patent.

Telephone inquiries should be directed to the undersigned at (571) 272-3215.

Charlema R. Grant

Charlema R. Grant
Petitions Attorney
Office of Petitions

UNITED STATES PATENT AND TRADEMARK OFFICE

UNITED STATES DEPARTMENT OF COMMERCE
United States Patent and Trademark Office
Address: COMMISSIONER FOR PATENTS
P.O. Box 1450
Alexandria, Virginia 22313-1450
www.uspto.gov

SHAY GLENN LLP
2755 CAMPUS DRIVE
SUITE 210
SAN MATEO, CA 94403

Mail Date: 04/21/2010

Applicant	: John M. Adams	: DECISION ON REQUEST FOR
Patent Number	: 7608102	: RECALCULATION of PATENT
Issue Date	: 10/27/2009	: TERM ADJUSTMENT IN VIEW
Appliction No	: 10/813,354	: OF WYETH AND NOTICE OF INTENT TO
Filed	: 03/29/2004	: ISSUE CERTIFICATE OF CORRECTION
		:

The Request for Recalculation is **GRANTED** to the extent indicated.

The patent term adjustment has been determined to be **1527** days. The USPTO will *sua sponte* issue a certificate of correction reflecting the amount of PTA days determined by the recalculation.

Prior to the issuance of the certificate of correction, the USPTO will afford patentee an opportunity to be heard and request reconsideration. Accordingly, patentee has **one month or thirty (30) days**, whichever is longer, to file a request for reconsideration of this patent term adjustment calculation. See 35 U.S.C. 154(b)(3)(B)(ii) and 37 CFR 1.322(a)(4). No extensions of time will be granted under 37 CFR 1.136.

Patentee should use document code PET.OP if electronically filing a request for reconsideration of this patent term adjustment calculation. The patentee must also include the information required by 37 CFR 1.705(b)(2) and the fee required by 37 CFR 1.18(e). If patentee does not file a timely request for reconsideration of this patent term adjustment calculation including the information required by 37 CFR 1.705(b)(2) and the fee required by 37 CFR 1.18(e), the USPTO will issue a certificate of correction reflecting the PTA determination noted above.

Patentee should be aware that in order to preserve the right to review in the United States District Court for the District of Columbia of the USPTO patent term adjustment determination, patentee must ensure that he or she also take the steps required under 35 U.S.C. 154(b)(4)(A) in a timely manner. Nothing in the request for recalculation should be construed as providing an alternative time frame for commencing a civil action under 35 U.S.C. 154(b)(4)(A).

Any questions concerning this decision should be directed to the Office of Patent Legal Administration at 571-272-7702.

UNITED STATES PATENT AND TRADEMARK OFFICE

UNITED STATES DEPARTMENT OF COMMERCE
United States Patent and Trademark Office
Address: COMMISSIONER FOR PATENTS
P.O. Box 1450
Alexandria, Virginia 22313-1450
www.uspto.gov

STERNE, KESSLER, GOLDSTEIN & FOX P.L.L.C.
1100 NEW YORK AVENUE, N.W.
WASHINGTON, DC 20005

Mail Date: 04/21/2010

Applicant	: Abbas Amirichimeh	: DECISION ON REQUEST FOR
Patent Number	: 7593457	: RECALCULATION of PATENT
Issue Date	: 09/22/2009	: TERM ADJUSTMENT IN VIEW
Appliction No	: 10/813,363	: OF WYETH AND NOTICE OF INTENT TO
Filed	: 03/31/2004	: ISSUE CERTIFICATE OF CORRECTION
		:

The Request for Recalculation is **GRANTED** to the extent indicated.

The patent term adjustment has been determined to be **1519** days. The USPTO will *sua sponte* issue a certificate of correction reflecting the amount of PTA days determined by the recalculation.

Prior to the issuance of the certificate of correction, the USPTO will afford patentee an opportunity to be heard and request reconsideration. Accordingly, patentee has **one month or thirty (30) days**, whichever is longer, to file a request for reconsideration of this patent term adjustment calculation. See 35 U.S.C. 154(b)(3)(B)(ii) and 37 CFR 1.322(a)(4). No extensions of time will be granted under 37 CFR 1.136.

Patentee should use document code PET.OP if electronically filing a request for reconsideration of this patent term adjustment calculation. The patentee must also include the information required by 37 CFR 1.705(b)(2) and the fee required by 37 CFR 1.18(e). If patentee does not file a timely request for reconsideration of this patent term adjustment calculation including the information required by 37 CFR 1.705(b)(2) and the fee required by 37 CFR 1.18(e), the USPTO will issue a certificate of correction reflecting the PTA determination noted above.

Patentee should be aware that in order to preserve the right to review in the United States District Court for the District of Columbia of the USPTO patent term adjustment determination, patentee must ensure that he or she also take the steps required under 35 U.S.C. 154(b)(4)(A) in a timely manner. Nothing in the request for recalculation should be construed as providing an alternative time frame for commencing a civil action under 35 U.S.C. 154(b)(4)(A).

Any questions concerning this decision should be directed to the Office of Patent Legal Administration at 571-272-7702.

UNITED STATES PATENT AND TRADEMARK OFFICE

UNITED STATES DEPARTMENT OF COMMERCE
United States Patent and Trademark Office
Address: COMMISSIONER FOR PATENTS
P.O. Box 1450
Alexandria, Virginia 22313-1450
www.uspto.gov

STERNE, KESSLER, GOLDSTEIN & FOX P.L.L.C.
1100 NEW YORK AVENUE, N.W.
WASHINGTON, DC 20005

Mail Date: 05/18/2010

Applicant : Abbas Amirichimeh
Patent Number : 7593457
Issue Date : 09/22/2009
Application No : 10/813,363
Filed : 03/31/2004

: NOTICE CONCERNING IMPROPER
: CALCULATION OF PATENT TERM
: ADJUSTMENT BASED UPON USPTO
: IMPROPERLY MEASURING REDUCTION
: PERIOD UNDER 37 CFR 1.704(c)(10).

The United States Patent and Trademark Office (USPTO) discovered that in processing the recent recalculation decisions mailed in response to patentee's filed Request for Recalculation of Patent Term Adjustment in view of Wyeth, the USPTO improperly measured the reduction period for reductions under 37 CFR 1.704(c)(10). Pursuant to 37 CFR 1.704(c)(10), patentee's reduction begins on the date of filing the amendment under 37 CFR 1.312 ("1.312 amendment") or other related paper and ends on the date that the Office mails a response to the filing of the 1.312 amendment or other paper. It has been discovered that during the recalculation, the calculation failed to the limit the reduction to the mail date of the response to the 1.312 amendment or other paper. Accordingly, patentee's reductions were greater than warranted.

This notice **VACATES** the previous GRANTED request for recalculation and provides patentee with a revised GRANTED recalculation.

The patent term adjustment has been determined to be **1551** days. The USPTO will *sua sponte* issue a certificate of correction reflecting the amount of patent term adjustment (PTA) days determined by the recalculation.

Prior to the issuance of the certificate of correction, the USPTO will afford patentee an opportunity to be heard and request reconsideration. Accordingly, patentee has **one month or thirty (30) days** from the mail date of this notice, whichever is longer, to file a request for reconsideration of this PTA calculation. See 35 U.S.C. § 154(b)(3)(B)(ii) and 37 CFR 1.322(a)(4).

Patentee should use document code PET.OP if electronically filing a request for reconsideration of this PTA calculation. The patentee must also include the information required by 37 CFR 1.705(b)(2), and the fee required by 37 CFR 1.18(e). If patentee does not file a timely request for reconsideration of this PTA calculation, including the information required by 37 CFR 1.705(b)(2) and the fee required by 37 CFR 1.18(e), the USPTO will issue a certificate of correction reflecting the PTA determination noted above.

Patentee should be aware that in order to preserve the right of review of the USPTO's PTA determination in the United States District Court for the District of Columbia, patentee must ensure that the steps required under 35 U.S.C. § 154 (b)(4) are taken in a timely manner. Nothing in the request for recalculation should be construed as providing an alternative time frame for commencing a civil action under 35 U.S.C. § 154(b)(4).

UNITED STATES PATENT AND TRADEMARK OFFICE

UNITED STATES DEPARTMENT OF COMMERCE
United States Patent and Trademark Office
Address: COMMISSIONER FOR PATENTS
P.O. Box 1450
Alexandria, Virginia 22313-1450
www.uspto.gov

BRINKS HOFER GILSON & LIONE/PML
PO BOX 10395
CHICAGO, IL 60610

Mail Date: 04/21/2010

Applicant	: Douglas S. Ransom	: DECISION ON REQUEST FOR
Patent Number	: 7644290	: RECALCULATION of PATENT
Issue Date	: 01/05/2010	: TERM ADJUSTMENT IN VIEW
Appliction No	: 10/813,369	: OF WYETH AND NOTICE OF INTENT TO
Filed	: 03/30/2004	: ISSUE CERTIFICATE OF CORRECTION
		:

The Request for Recalculation is **GRANTED** to the extent indicated.

The patent term adjustment has been determined to be **828** days. The USPTO will *sua sponte* issue a certificate of correction reflecting the amount of PTA days determined by the recalculation.

Prior to the issuance of the certificate of correction, the USPTO will afford patentee an opportunity to be heard and request reconsideration. Accordingly, patentee has **one month or thirty (30) days**, whichever is longer, to file a request for reconsideration of this patent term adjustment calculation. See 35 U.S.C. 154(b)(3)(B)(ii) and 37 CFR 1.322(a)(4). No extensions of time will be granted under 37 CFR 1.136.

Patentee should use document code PET.OP if electronically filing a request for reconsideration of this patent term adjustment calculation. The patentee must also include the information required by 37 CFR 1.705(b)(2) and the fee required by 37 CFR 1.18(e). If patentee does not file a timely request for reconsideration of this patent term adjustment calculation including the information required by 37 CFR 1.705(b)(2) and the fee required by 37 CFR 1.18(e), the USPTO will issue a certificate of correction reflecting the PTA determination noted above.

Patentee should be aware that in order to preserve the right to review in the United States District Court for the District of Columbia of the USPTO patent term adjustment determination, patentee must ensure that he or she also take the steps required under 35 U.S.C. 154(b)(4)(A) in a timely manner. Nothing in the request for recalculation should be construed as providing an alternative time frame for commencing a civil action under 35 U.S.C. 154(b)(4)(A).

Any questions concerning this decision should be directed to the Office of Patent Legal Administration at 571-272-7702.

UNITED STATES PATENT AND TRADEMARK OFFICE

Commissioner for Patents
United States Patent and Trademark Office
P.O. Box 1450
Alexandria, VA 22313-1450
www.uspto.gov

BRINKS HOFER GILSON & LIONE
P.O. BOX 10395
CHICAGO IL 60610

COPY MAILED

SEP 13 2005

OFFICE OF PETITIONS

In re Application of
Boatman, et al.
Application No. 10/813,415
Deposited: March 30, 2004
Attorney Docket No. 8627-453
For: MEDICAL DEVICE INCLUDING UNITARY, CONTINUOUS PORTION OF VARYING DUROMETER

DECISION GRANTING PETITION

This is a decision on the petition, filed July 16, 2004 (certificate of mailing date July 14, 2004), requesting that the above-identified application be accorded a filing date of March 30, 2004.

The application was deposited on March 30, 2004. On June 14, 2004, the Office of Initial Patent Examination mailed a Notice informing petitioners that no filing date had been accorded to the application papers deposited on March 30, 2004 because no drawings were present, as is required by 35 U.S.C. 113.

In response to the Notice, petitioners timely filed the present petition. Petitioners request that the above-identified application be accorded a filing date of March 30, 2004 on the basis that 5 sheets of drawing figures were received in the Patent and Trademark Office (PTO) on March 30, 2004. In support, the petition is accompanied by a copy of applicants' itemized postcard receipt showing an Office of Initial Patent Examination generated barcode citing March 30, 2004 as the date of receipt. The postcard lists, *inter alia*, that the filing includes 5 sheets of formal drawings. While the OIPE stamp on the postcard lists the application as 10/813,416, it is noted that the postcard identifies the first named inventor and docket number that corresponds to this invention. In addition, the original utility transmittal patent application letter that is present in the application file shows that the application was identified as 10/813,415, as well.

The return postcard constitutes *prima facie* evidence that 5 sheets of drawings were filed on March 30, 2004. MPEP 503. Accordingly, the request is granted. No petition fee has been or will be charged in connection with this matter.

The application is being returned to Office of Initial Patent Examination for further processing, with a filing date of **March 30, 2004**, using the copy of the 5 sheets of drawings submitted with

the instant petition. Office records will be corrected to show that 5 sheets of drawings were present on filing.

Any inquiries pertaining to this matter may be directed to the undersigned at (571) 272-3230.

E. Shirene Willis
Senior Petitions Attorney
Office of Petitions

UNITED STATES PATENT AND TRADEMARK OFFICE

UNITED STATES DEPARTMENT OF COMMERCE
United States Patent and Trademark Office
Address: COMMISSIONER FOR PATENTS
P.O. Box 1450
Alexandria, Virginia 22313-1450
www.uspto.gov

BRINKS HOFER GILSON & LIONE
P.O. BOX 10395
CHICAGO, IL 60610

Mail Date: 04/21/2010

Applicant	: John J. Connors III	: DECISION ON REQUEST FOR
Patent Number	: 7595082	: RECALCULATION of PATENT
Issue Date	: 09/29/2009	: TERM ADJUSTMENT IN VIEW
Appliction No	: 10/813,423	: OF WYETH AND NOTICE OF INTENT TO
Filed	: 03/30/2004	: ISSUE CERTIFICATE OF CORRECTION
		:

The Request for Recalculation is **GRANTED** to the extent indicated.

The patent term adjustment has been determined to be **1223** days. The USPTO will *sua sponte* issue a certificate of correction reflecting the amount of PTA days determined by the recalculation.

Prior to the issuance of the certificate of correction, the USPTO will afford patentee an opportunity to be heard and request reconsideration. Accordingly, patentee has **one month or thirty (30) days**, whichever is longer, to file a request for reconsideration of this patent term adjustment calculation. See 35 U.S.C. 154(b)(3)(B)(ii) and 37 CFR 1.322(a)(4). No extensions of time will be granted under 37 CFR 1.136.

Patentee should use document code PET.OP if electronically filing a request for reconsideration of this patent term adjustment calculation. The patentee must also include the information required by 37 CFR 1.705(b)(2) and the fee required by 37 CFR 1.18(e). If patentee does not file a timely request for reconsideration of this patent term adjustment calculation including the information required by 37 CFR 1.705(b)(2) and the fee required by 37 CFR 1.18(e), the USPTO will issue a certificate of correction reflecting the PTA determination noted above.

Patentee should be aware that in order to preserve the right to review in the United States District Court for the District of Columbia of the USPTO patent term adjustment determination, patentee must ensure that he or she also take the steps required under 35 U.S.C. 154(b)(4)(A) in a timely manner. Nothing in the request for recalculation should be construed as providing an alternative time frame for commencing a civil action under 35 U.S.C. 154(b)(4)(A).

Any questions concerning this decision should be directed to the Office of Patent Legal Administration at 571-272-7702.

UNITED STATES PATENT AND TRADEMARK OFFICE

UNITED STATES DEPARTMENT OF COMMERCE
United States Patent and Trademark Office
Address: COMMISSIONER FOR PATENTS
P.O. Box 1450
Alexandria, Virginia 22313-1450
www.uspto.gov

APPLICATION NO.	FILING DATE	FIRST NAMED INVENTOR	ATTORNEY DOCKET NO.	CONFIRMATION NO.
10/813,426	03/31/2004	Lilian Alcaraz	056291-5103-01	3791

9629 7590 03/01/2006

MORGAN LEWIS & BOCKIUS LLP
1111 PENNSYLVANIA AVENUE NW
WASHINGTON, DC 20004

EXAMINER
NOLAN, JASON MICHAEL

ART UNIT	PAPER NUMBER
1626	

DATE MAILED: 03/01/2006

Please find below and/or attached an Office communication concerning this application or proceeding.

UNITED STATES
PATENT AND
TRADEMARK OFFICE

UNDER SECRETARY OF COMMERCE FOR INTELLECTUAL PROPERTY AND
DIRECTOR OF THE UNITED STATES PATENT AND TRADEMARK OFFICE
P.O. Box 1450
Alexandria, VA. 22313-1450
WWW.USPTO.GOV

Morgan Lewis & Bockius LLP
1111 Pennsylvania Avenue, N.W.
Washington, D.C. 20004

Date: February 6, 2006
Application No. 10/813,426
Filed: March 31, 2004
Subject: **Adamantane Derivatives**

ON PETITION
37 CFR 1.48(b)

Receipt is acknowledged of the petition filed November 10, 2004 under 37 CFR 1.48(b) for correction of inventorship. The petition has been **GRANTED**.

In view of the papers filed, it has been found that during the prosecution of the instant application a restriction was required and therefore, not all of the inventors contributed to the invention as now claimed. Accordingly, this application has been changed by the **deletion of Moya Caffrey and Timothy Luker.** The application will be forwarded to the Office of Initial Patent Examination (OIPE) for issuance of a corrected filing receipt, and correction of the file jacket and PTO PALM data to reflect the inventorship as corrected.

Joseph K. McKane

JOSEPH K. M^cKANE
United States Patent and Trademark Office
Technology Center 1600
SPE, ART UNIT 1626
Remsen 5A05
571-272-0699

UNITED STATES PATENT AND TRADEMARK OFFICE

Commissioner for Patents
United States Patent and Trademark Office
P.O. Box 1450
Alexandria, VA 22313-1450
www.uspto.gov

MCDERMOTT, WILL & EMERY
600 13th Street, N.W.
Washington DC 20005-3096

COPY MAILED

MAR 30 2005

OFFICE OF PETITIONS

In re Application of	:
O'Mahony and Gururaj	:
Application No. 10/813,430	: DECISION REFUSING STATUS
Filed: March 31, 2004	: UNDER 37 CFR 1.47(a)
Attorney Docket No. 66396-153	:

This is in response to the petition under 37 CFR 1.47(a), filed September 14, 2004. Petitioner obtained a one-month extension of time to respond. Accordingly, the petition is timely filed.

The petition is dismissed.

Applicants are given TWO (2) MONTHS from the mailing date of this decision to reply, correcting the below-noted deficiencies. Any reply should be entitled "Request for Reconsideration of Petition Under 37 CFR 1.47(a)," and should address the deficiencies noted below, except that the reply may include an oath or declaration executed by the non-signing inventor. Failure to respond will result in abandonment of the application. Any extensions of time will be governed by 37 CFR 1.136(a).

The above-identified application was filed on March 31, 2004, without an executed oath or declaration. Accordingly, on June 14, 2004, the Office of Initial Patent Examination mailed a "Notice to File Missing Parts of Application," requiring an oath or declaration, the statutory basic filing fee and a surcharge for their late filing.

In response, on September 14, 2004, applicants filed the present petition, a Declaration of Facts of Brenda G. Cnudde, a declaration executed by one of the two joint inventors, a request for a one-

month extension of time to respond, and an authorization to charge any necessary fees.

In the Declaration of Facts, Ms. Cnudde stated that on June 25, 2004, she sent a letter to the nonsigning inventor, Manjula Gururaj, at 520 Mansion Court #102, Santa Clara, CA 95054, to review the patent application and to sign the Declaration and Power of Attorney and Assignment documents. Ms. Cnudde did not receive a response to the letter. Ms. Cnudde further stated that she obtained Ms. Gururaj's last known address from the human resource department, and sent another letter to Ms. Gururaj at 480 Oak Grove Drive, Apt. 102, Santa Clara, CA 95054. The letter was returned and marked as "Return to Sender, Forwarding Order Expired." A copy of the returned envelope accompanies the present petition. On August 3, 2004, Ms. Cnudde call Ms. Gururaj at her last known phone number and left a message but Ms. Gururaj did not return the call. On August 4, 2004, Ms. Cnudde sent an email to Ms. Gururaj and asked her to contact Mr. Cnudde; however, no response was received.

A grantable petition under 37 CFR 1.47(a) requires: (1) proof that the non-signing inventor cannot be reached or refuses to sign the oath or declaration after having been presented with the application papers (specification, claims and drawings); (2) an acceptable oath or declaration in compliance with 35 U.S.C. §§ 115 and 116; (3) the petition fee; and (4) a statement of the last known address of the non-signing inventor. Applicants lacks item (1) set forth above.

As to item (1), applicants failed to show that the inventor cannot be reached after diligent efforts. As previously stated, applicants explained that on July 22, 2004, Ms. Cnudde sent a letter to Ms. Gururaj at her last known address; however, the letter was returned and marked as "Return to Sender, Forwarding Order Expired." In the present petition, applicants did not set forth in detail what diligent efforts were made to obtain a current address for Ms. Gururaj. Accordingly, the record currently fails to demonstrate, with a documented showing, that a diligent effort was made to find or locate Ms. Gururaj so as to obtain her signature on the declaration, such that the declaration can be accepted under 37 CFR 1.47.

Where inability to find or locate a named inventor is alleged, a statement of facts should be submitted that fully describes the exact facts which are relied on to establish that a diligent effort was made to locate the inventor. A person having firsthand knowledge of the facts must sign the statement of facts, where at all possible. If attempts to obtain a forwarding address and to locate the non-signing inventor by other means such as through

E-mail, telephone, or the Internet continue to fail, then applicant will have provided the necessary proof required under 37 CFR 1.47 that the inventor cannot be reached. Applicants should submit documentary evidence such as the results of an Internet search for Ms. Gururaj's most current address. It is important that the forthcoming communication contain statements of fact as opposed to conclusions. If there is an express oral refusal, a statement from the person to whom that refusal was made should be made of record.

Further correspondence with respect to this matter should be addressed as follows and **to the attention of Christina Tartera Donnell, Senior Petitions Attorney**:

By mail: Mail Stop Petition
Commissioner for Patents
P.O. Box 1450
Alexandria, VA 22313-1450

By FAX: (703) 872-9306
Attn: Office of Petitions

By hand: Customer Service Window
Randolph Building
401 Dulany Street
Alexandria, VA 22314

Telephone inquiries related to this decision may be directed to the undersigned at (571) 272-3211.

Christina Tartera Donnell

Christina Tartera Donnell
Senior Petitions Attorney
Office of Petitions

UNITED STATES PATENT AND TRADEMARK OFFICE

Commissioner for Patents
United States Patent and Trademark Office
P.O. Box 1450
Alexandria, VA 22313-1450
www.uspto.gov

MCDERMOTT, WILL & EMERY
600 13th Street, N.W.
Washington DC 20005-3096

COPY MAILED

JUN 03 2005

OFFICE OF PETITIONS

In re Application of
O'Mahony and Gururaj
Application No. 10/813,430
Filed: March 31, 2004
Attorney Docket No. 66396-153

DECISION NOTING JOINDER OF INVENTOR AND PETITION UNDER 37 CFR 1.47(a) MOOT

This is in response to the renewed petition under 37 CFR 1.47(a), filed on May 20, 2005.

In view of the joinder of the inventors, further consideration under 37 CFR 1.47(a) is not necessary. Accordingly, the petition is dismissed as involving a moot issue. This application does not have any Rule 1.47(a) status and no such status should appear on the file wrapper. This application does not need to be returned to the Office of Petitions for further consideration under 37 CFR 1.47(a).

This matter is being referred to Technology Center Art Unit 2859.

Telephone inquiries should be directed to the undersigned at (571) 272-3211.

Christina Tartera Donnell

Christina Tartera Donnell
Senior Petitions Attorney
Office of Petitions

UNITED STATES PATENT AND TRADEMARK OFFICE

Commissioner for Patents
United States Patent and Trademark Office
P.O. Box 1450
Alexandria, VA 22313-1450
www.uspto.gov

RICHARD STOCKEL
475 ROLLING HILLS ROAD
BRIDGEWATER, NJ 08807

COPY MAILED

MAR 19 2007

OFFICE OF PETITIONS

In re Application of :
Richard F. Stockel et al :
Application No. 10/813,462 : DECISION ON PETITION
Filed: March 30, 2004 :
For: FOUNTAIN SOLUTIONS :
CONTAINING ANTIPILING
MACROMOLECULES

This is a decision on the petition under 37 CFR 1.137(b), filed December 19, 2006, to revive the above-identified application.

The petition is **DISMISSED**.

Any request for reconsideration of this decision must be submitted within TWO (2) MONTHS from the mail date of this decision. Extensions of time under 37 CFR 1.136(a) are permitted. The reconsideration request should include a cover letter entitled "Renewed Petition under 37 CFR 1.137(b)." This is **not** a final agency action within the meaning of 5 U.S.C. § 704.

This application became abandoned for failure to timely pay the issue and publication fees on or before October 20, 2005, as required by the Notice of Allowance and Fee(s) Due, mailed July 20, 2006. Accordingly, the date of abandonment of this application is October 21, 2005. A Notice of Abandonment was mailed on February 8, 2007, subsequent to the filing of the present petition to revive.

A grantable petition under 37 CFR 1.137(b) must be accompanied by: (1) the required reply, unless previously filed; (2) the petition fee as set forth in 37 CFR 1.17(m); (3) a statement that the entire delay in filing the required reply from the due date for the reply until the filing of a grantable petition pursuant to 37 CFR 1.137(b) was unintentional; and (4) any terminal disclaimer (and fee as set forth in 37 CFR 1.20(d)) required by 37 CFR 1.137(d). Where there is a question as to whether either the abandonment or the delay in filing a petition under 37 CFR

1.137 was unintentional, the Director may require additional information. See MPEP 711.03(c)(II)(C). The instant petition fails to satisfy item (3).

The statement of delay is not acceptable. In this regard, petitioner's attention is directed to 37 CFR 1.33(b), which states.

> (b) Amendments and other papers. Amendments and other papers, except for written assertions pursuant to § 1.27(c)(2)(ii) of this part, filed in the application must be signed by:
>
> (1) A registered patent attorney or patent agent of record appointed in compliance with § 1.32(b);
>
> (2) A registered patent attorney or patent agent not of record who acts in a representative capacity under the provisions of § 1.34;
>
> (3) An assignee as provided for under §3.71(b) of this chapter; or
>
> (4) All of the applicants (§ 1.41(b)) for patent, unless there is an assignee of the entire interest and such assignee has taken action in the application in accordance with § 3.71 of this chapter.

An unsigned amendment (or other paper) or one not properly signed by a person having authority to prosecute the application is not entered. This applies, for instance, where the amendment (or other paper) is signed by only one of two applicants and the one signing has not been given a power of attorney by the other applicant.

Therefore, as the petition is not signed by all the applicants and the record herein fails to disclose that petitioner herein (Richard E. Stockel) was ever given a power of attorney to act on behalf of co-applicant Michael Chester, or that he is an assignee of the entire interest and has complied with the provisions of 37 CFR 3.73(b), the petition is considered to not contain a proper statement of unintentional delay.

Accordingly, a renewed petition under 37 CFR 1.137(b) signed by both inventors with a statement that "the entire delay in filing the required reply from the due date for the reply until the filing of a grantable petition pursuant to 37 CFR 1.137(b) was unintentional" must be submitted. Additionally, the Part B - Fee(s) Transmittal form should also be signed by both applicants.

It is further noted that all of the communications submitted to the Office were not signed by both applicants. Accordingly, a statement must be submitted and signed by both applicants which ratifies all of the communications submitted in this application signed solely by applicant Richard F. Stockel.

Further correspondence with respect to this matter should be addressed as follows:

By Mail: Mail Stop PETITION
Commissioner for Patents
P. O. Box 1450
Alexandria, VA 22313-1450

By hand: U. S. Patent and Trademark Office
Customer Service Window, Mail Stop Petitions
Randolph Building
401 Dulany Street
Alexandria, VA 22314

The centralized facsimile number is **(571) 273-8300.**

Telephone inquiries concerning this decision should be directed to the undersigned at (571) 272-3218.

Frances Hicks
Petitions Examiner
Office of Petitions

DATE 8-23-07 APPLICATION NUMBER 10/813462

DOC CODE Rel Doc. Pubs DOC DATE

DELIVER THE ATTACHED FIFLE/DOCUMENT TO THE TC SCANNING CENTER

CONTRACTOR: THE ATTACHED FILE/DOCUMENT MUST BE INDEXED AND SCANNED INTO IFW WITHIN **8** WORK HOURS; UPLOADING OF THE SCANNED IMAGES SHOULD OCCUR NO LATER THAN **16** WORK HOURS FOLLOWING RECEIPT OF THIS REQUEST

AFTER SCANNING, ORIGINAL DOCUMENTS SHOULD BE BOXED IN ACCORDANCE WITH INSTRUCTIONS

UNITED STATES PATENT AND TRADEMARK OFFICE

Commissioner for Patents
United States Patent and Trademark Office
P.O. Box 1450
Alexandria, VA 22313-1450
www.uspto.gov

RICHARD STOCKEL
475 ROLLING HILLS ROAD
BRIDGEWATER, NJ 08807

COPY MAILED

AUG 28 2007

OFFICE OF PETITIONS

In re Application of :
Richard F. Stockel et al :
Application No. 10/813,462 :
Filed: March 30, 2004 :
For: FOUNTAIN SOLUTIONS :
CONTAINING ANTIPILING
MACROMOLECULES

DECISION ON PETITION

This is a decision on the renewed petition under 37 CFR 1.137(b), filed March 26, 2007, to revive the above-identified application.

The petition is **GRANTED**.

This application became abandoned for failure to timely pay the issue and publication fees on or before October 20, 2005, as required by the Notice of Allowance and Fee(s) Due, mailed July 20, 2006. Accordingly, the date of abandonment of this application is October 21, 2005. A Notice of Abandonment was mailed on February 8, 2007, subsequent to the filing of the present petition to revive.

The petition satisfies the requirements of 37 CFR 1.137(b) in that petitioner has supplied (1) the reply in the form of payment of the issue fee of $700 and the publication fee of $300, (2) the petition fee of $750, and (3) a proper statement of unintentional delay. Accordingly, the issue and publication fees are accepted as being unintentionally delayed.

Telephone inquiries concerning this decision should be directed to the undersigned at (571) 272-3218.

This application is being referred to Publishing Division for appropriate processing in accordance with this decision accepting the unintentionally delayed payment of the issue and publication fees.

Frances Hicks
Petitions Examiner
Office of Petitions

UNITED STATES PATENT AND TRADEMARK OFFICE

Commissioner for Patents
United States Patent and Trademark Office
P.O. Box 1450
Alexandria, VA 22313-1450
www.uspto.gov

NEC LABORATORIES AMERICA, INC.
4 INDEPENDENCE WAY
PRINCETON NJ 08540

COPY MAILED

MAY 13 2009

OFFICE OF PETITIONS

In re Application of	:	
Dubnicki et al.	:	
Application No. 10/813,484	:	ON PETITION
Filed: March 30, 2004	:	
Attorney Docket No. 02022-B	:	

This is a decision on the petition under 37 C.F.R. § 1.137(b), filed February 27, 2009, to revive the above-identified application.

The petition is **GRANTED**.

The petition satisfies the requirements of 37 CFR 1.137(b) in that petitioner has supplied (1) the reply in the form of an Amendment and Election, (2) the petition fee, and (3) a proper statement of unintentional delay.

The file does not indicate a change of address has been submitted, although the address given on the petition differs from the address of record. If appropriate, a request to change the address of record should be filed. A courtesy copy of this decision is being mailed to the address given on the petition; however, the Office will mail all future correspondence solely to the address of record.

Telephone inquiries concerning this decision should be directed to the undersigned at (571) 272-3206.

This matter is being referred to Technology Center AU 2457 for further examination on the merits.

Liana Walsh
Petitions Examiner
Office of Petitions

cc: WOLFF & SAMSON, P.C.
ONE BOLAND DRIVE
WEST ORANGE, NJ 07052

UNITED STATES PATENT AND TRADEMARK OFFICE

UNITED STATES DEPARTMENT OF COMMERCE
United States Patent and Trademark Office
Address: COMMISSIONER FOR PATENTS
P.O. Box 1450
Alexandria, Virginia 22313-1450
www.uspto.gov

APPLICATION NO.	FILING DATE	FIRST NAMED INVENTOR	ATTORNEY DOCKET NO.	CONFIRMATION NO.
10/813,495	03/30/2004	Stephen J. Rothermel	10420US01	4893

7590 08/21/2006

Imation Corp.
Legal Affairs
P.O. Box 64898
St. Paul, MN 55164-0898

EXAMINER
KAPADIA, VARSHA A

ART UNIT	PAPER NUMBER
2627	

DATE MAILED: 08/21/2006

Please find below and/or attached an Office communication concerning this application or proceeding.

UNITED STATES PATENT AND TRADEMARK OFFICE

Commissioner for Patents
United States Patent and Trademark Office
P.O. Box 1450
Alexandria, VA 22313-1450
www.uspto.gov

MAIL

AUG 2 1 2006

DIRECTOR OFFICE
TECHNOLOGY CENTER 2600

Imation Corp.
Legal Affairs
P.O. Box 64898
St. Paul MN 55164-0898

In re Application of
Stephen J. Rothermel, et al.
Application No. 10/813,495
Filed: March 30, 2004
US Publication No. 2005/0219734
Published: October 6, 2005
For: **WRITE HEAD ALIGNMENT FOR FULL AMPLITUDE TIME-BASED SERVO**

NOTIFICATION OF IDENTIFICATION OF PRIOR ART IN A THIRD PARTY SUBMISSION UNDER 37C.F.R. § 1.99

This is a decision on the third party submission filed in the subject application on December 9, 2005, pursuant to 37 CFR 1.99.

37 C.F.R. § 1.99 Third-party submission in published application, states:

(a) A submission by a member of the public of patents or publications relevant to a pending published application may be entered in the application file if the submission complies with the requirements of this section and the application is still pending when the submission and application file are brought before the examiner.

(b) A submission under this section must identify the application to which it is directed by application number and include:

(1) The fee set forth in § 1.17(p);

(2) A list of the patents or publications submitted for consideration by the Office, including the date of publication of each patent or publication;

(3) A copy of each listed patent or publication in written form or at least the pertinent portions; and

(4) An English language translation of all the necessary and pertinent parts of any non-English language patent or publication in written form relied upon.

(c) The submission under this section must be served upon the applicant in accordance with § 1.248.

(d) A submission under this section shall not include any explanation of the patents or publications, or any other information. The Office will not enter such explanation or information if included in a submission under this section. A submission under this section is also limited to ten total patents or publications.

(e) A submission under this section must be filed within two months from the date of publication of the application (§ 1.215(a)) or prior to the mailing of a notice of allowance (§ 1.311), whichever is earlier. Any submission under this section not filed within this period is permitted only when the patents or publications could not have been submitted to the Office earlier, and must also be accompanied by the processing fee set forth in § 1.17(i). A submission by a member of the public to a pending published application that does not comply with the requirements of this section will not be entered.

(f) A member of the public may include a self-addressed postcard with a submission to receive an acknowledgment by the Office that the submission has been received. A member of the public filing a submission under this section will not receive any

communications from the Office relating to the submission other than the return of a self-addressed postcard. In the absence of a request by the Office, an applicant has no duty to, and need not, reply to a submission under this section.

The submission complies with the requirements set forth above and will be entered into the application file.

Dwayne Bost
Special Programs Examiner
Technology Center 2600
Communications

UNITED STATES PATENT AND TRADEMARK OFFICE

Commissioner for Patents
United States Patent and Trademark Office
P.O. Box 1450
Alexandria, VA 22313-1450
www.uspto.gov

WOODCOCK WASHBURN LLP
CIRA CENTRE, 12TH FLOOR
2929 ARCH STREET
PHILADELPHIA PA 19104-2891

COPY MAILED

MAY 22 2008

OFFICE OF PETITIONS

In re Application of :
Nicholas C. Nicolaides et al. :
Application No. 10/813,502 : ON PETITION
Filed: March 30, 2004 :
Attorney Docket No: MOR-0277

This is a decision on the petition filed May 9, 2008 under 37 CFR 1.182, for withdrawal of terminal disclaimer filed October 1, 2007.

The petition is **GRANTED**.

The examiner responsible for the above-identified application has indicated that the terminal disclaimer filed October 1, 2007, does not apply to any of the claims as currently amended. Accordingly, on petition the terminal disclaimer is withdrawn.

The petition fee in the amount of $400 has been charged to deposit account 23-3050 per the authorization in the petition.

This matter is being referred to Technology Center 1633 to correct the records related to the terminal disclaimer filed October 1, 2007, consistent with this decision.

Telephone inquiries concerning this matter may be directed to the undersigned Petitions Attorney at (571) 272-3212.

Patricia Faison-Ball

Patricia Faison-Ball
Senior Petitions Attorney
Office of Petitions

UNITED STATES PATENT AND TRADEMARK OFFICE

Commissioner for Patents
United States Patent and Trademark Office
P.O. Box 1450
Alexandria, VA 22313-1450
www.uspto.gov

BRINKS HOFER GILSON & LIONE
P.O. BOX 10395
CHICAGO, IL 60610

COPY MAILED
FEB 26 2010

In re Patent No.: 7,635,763 Issue Date: December 22, 2009 Application No. 10/813,507 Filed: March 30,2004 Patentee(s): John S. Lollar	DECISION ON PETITION TO WITHDRAW FROM RECORD

This is a decision on the Request to Withdraw as attorney or agent of record under 37 CFR §§ 1.36(b) or 37 CFR 10.40, filed December 16, 2009.

The request is **NOT APPROVED**.

A review of the file record indicates that the power of attorney to Customer Number 00757 has been revoked by the assignee of the above application on February 10, 2010. Accordingly, the request to withdraw under 37 CFR §§ 1.36(b) or 10.40 is moot.

All future communications from the Office will be directed to the below-listed address until otherwise notified by applicant.

Telephone inquires concerning this decision should be directed to the undersigned at (571) 272-3226.

Andrea Smith
Petitions Examiner
Office of Petitions

cc: BEEM PATENT LAW FIRM
53 W. JACKSON BLVD., SUITE 1352
CHICAGO, IL 60604-3787

UNITED STATES PATENT AND TRADEMARK OFFICE

UNITED STATES DEPARTMENT OF COMMERCE
United States Patent and Trademark Office
Address: COMMISSIONER FOR PATENTS
P.O. Box 1450
Alexandria, Virginia 22313-1450
www.uspto.gov

BEEM PATENT LAW FIRM
53 W. JACKSON BLVD., SUITE 1352
CHICAGO, IL 60604-3787

Mail Date: 04/20/2010

Applicant	: John S. Lollar	: DECISION ON REQUEST FOR
Patent Number	: 7635763	: RECALCULATION of PATENT
Issue Date	: 12/22/2009	: TERM ADJUSTMENT IN VIEW
Appliction No	: 10/813,507	: OF WYETH AND NOTICE OF INTENT TO
Filed	: 03/30/2004	: ISSUE CERTIFICATE OF CORRECTION
		:

The Request for Recalculation is **GRANTED** to the extent indicated.

The patent term adjustment has been determined to be **1229** days. The USPTO will *sua sponte* issue a certificate of correction reflecting the amount of PTA days determined by the recalculation.

Prior to the issuance of the certificate of correction, the USPTO will afford patentee an opportunity to be heard and request reconsideration. Accordingly, patentee has **one month or thirty (30) days**, whichever is longer, to file a request for reconsideration of this patent term adjustment calculation. See 35 U.S.C. 154(b)(3)(B)(ii) and 37 CFR 1.322(a)(4). No extensions of time will be granted under 37 CFR 1.136.

Patentee should use document code PET.OP if electronically filing a request for reconsideration of this patent term adjustment calculation. The patentee must also include the information required by 37 CFR 1.705(b)(2) and the fee required by 37 CFR 1.18(e). If patentee does not file a timely request for reconsideration of this patent term adjustment calculation including the information required by 37 CFR 1.705(b)(2) and the fee required by 37 CFR 1.18(e), the USPTO will issue a certificate of correction reflecting the PTA determination noted above.

Patentee should be aware that in order to preserve the right to review in the United States District Court for the District of Columbia of the USPTO patent term adjustment determination, patentee must ensure that he or she also take the steps required under 35 U.S.C. 154(b)(4)(A) in a timely manner. Nothing in the request for recalculation should be construed as providing an alternative time frame for commencing a civil action under 35 U.S.C. 154(b)(4)(A).

Any questions concerning this decision should be directed to the Office of Patent Legal Administration at 571-272-7702.

UNITED STATES PATENT AND TRADEMARK OFFICE

Commissioner for Patents
United States Patent and Trademark Office
P.O. Box 1450
Alexandria, VA 22313-1450
www.uspto.gov

CHARLES E. BAXLEY, ESQ.
90 JOHN STREET
THIRD FLOOR
NEW YORK NY 10038

COPY MAILED

AUG 16 2006

OFFICE OF PETITIONS

In re Application of :
Lin Ming Chuan :
Application No. 10/813,511 : ON PETITION
Filed: March 29, 2004 :
Attorney Docket No.: 14325 B :

This is a decision on the petition filed May 24, 2006 under 37 CFR 1.137(b),[1] to revive the above-identified application.

The petition is **GRANTED**.

This application became abandoned for failure to timely reply to the non-Final Office Action mailed May 5, 2005. A shortened statutory period of three months was set for replying to the non-Final Office Action. No extensions of time having been requested prior to the expiration of the application, this application became abandoned August 8, 2005. Accordingly, the Notice of Abandonment was mailed February 7, 2006.

This matter is being referred to Technology Center 3637 for appropriate action on the amendment filed May 24, 2006.

Telephone inquiries concerning this matter should be directed to the undersigned Petitions Attorney at (571) 272-3212.

Patricia Faison-Ball

Patricia Faison-Ball
Senior Petitions Attorney
Office of Petitions

---

[1]Effective December 1, 1997, the provisions of 37 CFR 1.137(b) now provide that where the delay in reply was unintentional, a petition may be filed to revive an abandoned application or a lapsed patent pursuant to 37 CFR 1.137(b). A grantable petition filed under the provisions of 37 CFR 1.137(b) must be accompanied by:

(1) the required reply, unless previously filed. In a nonprovisional application abandoned for failure to prosecute, the required reply may be met by the filing of a continuing application. In a nonprovisional application filed on or after June 8, 1995, and abandoned for failure to prosecute, the required reply may also be met by the filing of a request for continued examination in compliance with § 1.114. In an application or patent, abandoned or lapsed for failure to pay the issue fee or any portion thereof, the required reply must be the payment of the issue fee or any outstanding balance thereof. In an application abandoned for failure to pay the publication fee, the required reply must include payment of the publication fee.

(2) the petition fee as set forth in 37 CFR 1.17(m);

(3) a statement that the entire delay in filing the required reply from the due date for the reply until the filing of a grantable petition pursuant to 37 CFR 1.137(b) was unintentional. The Commissioner may required additional information where there is a question whether the delay was unintentional; and

(4) any terminal disclaimer (and fee as set forth in 37 CFR 1.20(d)) required pursuant to 37 CFR 1.137(c)).

UNITED STATES PATENT AND TRADEMARK OFFICE

COMMISSIONER FOR PATENTS
UNITED STATES PATENT AND TRADEMARK OFFICE
P.O. BOX 1450
ALEXANDRIA, VA 22313-1450
www.uspto.gov

MICHAEL A. SHIPPEY, PH. D.
4848 LAKEVIEW AVENUE
SUITE B
YORBA LINDA, CA 92886

COPY MAILED

APR 27 2006

OFFICE OF PETITIONS

In re Application of :
Santa Cruz : DECISION ON PETITION
Application No. 10/813,518 :
Filed: March 30, 2004 :
Docket No.: 256.100 :

This is a decision on the petition, filed April 7, 2006, under 37 CFR 1.181 to withdraw the holding of abandonment.

The petition is **GRANTED**.

The application was held abandoned November 19, 2005 for failure to timely submit a proper reply to the final Office action mailed August 18, 2005. The final Office action set a three (3) month statutory period for reply. Notice of Abandonment was mailed March 17, 2006.

Petitioner alleges that a response to the outstanding Office action and a petition for extension of time were timely submitted February 20, 2006.

A review of the application history reveals that a response was received on February 20, 2006 and included the necessary petition for extension of time. A fee for the extension of time in the amount of $510.00 was collected at that time. The response, however, was errantly given a receipt date of March 20, 2006 rather than February 20, 2006, the date of actual receipt. The Office apologizes for this error.

In view thereof, the Notice of Abandonment is hereby vacated and the holding of abandonment is withdrawn.

No petition fee is due in connection with this matter. If applicable, petitioner may request a refund of any petition fee (notwithstanding the required petition for extension of time fee) submitted in connection with this matter. Petitioner may request a refund by writing to the Finance Office, Refund Section. A copy of this decision should accompany any request for refund.

The application file is being forwarded to the Technology Center 3600 for further processing.

Telephone inquiries concerning this matter may be directed to the undersigned at (571) 272-3205.

Alesia M. Brown
Petitions Attorney
Office of Petitions

UNITED STATES PATENT AND TRADEMARK OFFICE

Commissioner for Patents
United States Patent and Trademark Office
P.O. Box 1450
Alexandria, VA 22313-1450
www.uspto.gov

Michael Shippey, Ph.D
Law Offices of Karla Shippey
4848 Lakeview Avenue, Suite E
Yorba Linda, CA 92886

COPY MAILED

JUN 17 2008

OFFICE OF PETITIONS

In re Application of	:	
Michael Santa Cruz	:	
Application No. 10/813,518	:	DECISION ON PETITION
Filed: March 30, 2004	:	
Attorney Docket No. 256.100	:	

This is a decision on the petition under 37 CFR 1.137(b), filed, November 8, 2007, to revive the above-identified application.

The petition is **GRANTED**.

The application became abandoned for failure to reply in a timely manner to the Restriction Requirement mailed July 12, 2006, which set a shortened statutory period for reply of one (1) month or thirty (30) days (whichever is later). No extensions of time under the provisions of 37 CFR 1.136(a) were obtained. Accordingly, the application became abandoned on August 13, 2006. A Notice of Abandonment was mailed on February 5, 2007.

The petition satisfies the requirements of 37 CFR 1.137(b) in that petitioner has supplied (1) the reply in the form of an election, (2) the petition fee of $770, and (3) a proper statement of unintentional delay.

Telephone inquiries concerning this decision should be directed to Kimberly Inabinet at (571) 272-4618.

This application is being referred to Technology Center AU 3611 for appropriate action by the Examiner in the normal course of business on the reply received November 8, 2007.

Andrea Smith
Petitions Examiner
Office of Petitions

UNITED STATES PATENT AND TRADEMARK OFFICE

COMMISSIONER FOR PATENTS
UNITED STATES PATENT AND TRADEMARK OFFICE
P.O. BOX 1450
ALEXANDRIA, VA 22313-1450
www.uspto.gov

CARDINAL LAW GROUP
1603 ORRINGTON AVENUE
SUITE 2000
EVANSTON, IL 60201

COPY MAILED

MAY 02 2007

OFFICE OF PETITIONS

In re Application of	:	
AZEVEDO et al	:	
Application No.: 10/813,519	:	DECISION ON PETITION
Filing Date: March 30, 2004	:	UNDER 37 CFR 1.137(B)
Attorney Docket No.: SJO920040005US1	:	

This is a decision on the petition under 37 CFR 1.137(b), filed September 27, 2006, to revive the above-identified application.

The petition is **GRANTED.**

The above-identified application became abandoned for failure to submit the issue fee and publication fee in a timely manner in reply to the Notice of Allowance mailed June 2, 2006, which set a statutory period for reply of three (3) months. Accordingly, by operation of law, the above-identified application became abandoned on September 3, 2006.

The petition satisfies the conditions for revival pursuant to the provisions of 37 CFR 1.137(b) in that (1) the reply in the form of payment of the issue fee and publication fee; (2) the petition fee; and (3) the required statement of unintentional delay have been received. Accordingly, the payment of the issue fee and publication fee is accepted as having been unintentionally delayed.

This application is being referred to the Office of Publications.

Telephone inquiries concerning this decision should be directed to the undersigned at (571) 272-3303.

Bryan Lin

Bryan Lin
Legal Examiner
Office of the Deputy Commissioner
for Patent Examination Policy

UNITED STATES PATENT AND TRADEMARK OFFICE

Commissioner for Patents
United States Patent and Trademark Office
P.O. Box 1450
Alexandria, VA 22313-1450
www.uspto.gov

BLAKELY SOKOLOFF TAYLOR & ZAFMAN
12400 WILSHIRE BOULEVARD SEVENTH FLOOR
LOS ANGELES CA 90025-1030

COPY MAILED

JAN 09 2007

OFFICE OF PETITIONS

In re Application of
Alberto Martinez
Application No. 10/813,537
Filed: March 29, 2004
Attorney Docket No. 42P18569

DECISION ON PETITION

This is a decision on the petition filed November 9, 2006, to withdraw the holding of abandonment in the above-identified application.

The petition is **GRANTED**.

This application was held abandoned for failure to timely respond to the nonfinal Office action of March 13, 2006, which set a three (3) month shortened statutory period for reply. Accordingly, a reply was due on or before June 13, 2006. In the absence of a timely filed reply, the Office mailed a Notice of Abandonment on October 18, 2006.

Petitioners asserted that they submitted a timely reply to the nonfinal Office action accompanied by a certificate of mailing dated April 5, 2006. With the present petition, petitioner submitted a copy of the previously mailed reply in the form of an amendment, bearing a certificate of mailing dated April 5, 2006. The certificate of mailing of April 5, 2006, would have rendered the amendment timely filed if received in the USPTO; however, the application file does not include the original reply or the certificate of mailing.

Pursuant to 37 CFR 1.8(b):

> In the event that correspondence is considered timely filed by being mailed or transmitted in accordance with paragraph (a) of this section, but not received in the U.S. Patent and Trademark Office after a reasonable amount of time has elapsed from the time of mailing or transmitting of the correspondence, or after the application is held to be abandoned, or after the proceeding is dismissed, terminated, or decided with prejudice, the correspondence will be considered timely if the party who forwarded such correspondence:

(1) Informs the Office of the previous mailing or transmission of the correspondence promptly after becoming aware that the Office has no evidence of receipt of the correspondence;

(2) Supplies an additional copy of the previously mailed or transmitted correspondence and certificate; and

(3) Includes a statement which attests on a personal knowledge basis or to the satisfaction of the Director to the previous timely mailing or transmission. If the correspondence was sent by facsimile transmission, a copy of the sending unit's report confirming transmission may be used to support this statement.

The present petition satisfies the requirements of 37 CFR 1.8(b). Accordingly, the holding of abandonment for failure to file a timely reply to the nonfinal Office action of March 13, 2006, is withdrawn and the application is restored to pending status. The Office will accept the copy of the reply submitted with the petition on November 9, 2006, in place of the reply mailed on April 5, 2006.

This matter is being referred to Technology Center AU 2189 for appropriate action on the amendment submitted on November 9, 2006 (certificate of mailing dated April 5, 2006).

Telephone inquiries specific to this decision should be directed to the undersigned at (571) 272-3211. All other questions regarding the status of the application or the examination process should be directed to the Technology Center.

Christina Tartera Donnell

Christina Tartera Donnell
Senior Petitions Attorney
Office of Petitions

UNITED STATES PATENT AND TRADEMARK OFFICE

Commissioner for Patents
United States Patent and Trademark Office
P.O. Box 1450
Alexandria, VA 22313-1450
www.uspto.gov

COPY MAILED

DEC 0 3 2007

OFFICE OF PETITIONS

JONES, WALKER, WAECHTER, POITEVENT,
CARRERE & DENGRE, LLP
4TH FLOOR
8555 UNITED PLAZA BOULEVARD
BATON ROUGE LA 70809

In re Application of	:	
Mark Aston	:	
Application No. 10/813,541	:	DECISION ON PETITION
Filed: March 29, 2004	:	
Attorney Docket No. 16515/95349-01	:	

This is a decision on the petition under the unintentional provisions of 37 CFR 1.137(b), filed May 24, 2007, to revive the above-identified application.

The petition is **GRANTED**.

The two-month period for filing an appeal brief under 37 CFR 41.37 (accompanied by the fee required by 37 CFR 41.20(b)(2)), runs from the date of this decision.

This application became abandoned for failure to timely file a reply within the meaning of 37 CFR 1.113 to the final Office action of September 12, 2006. The proposed reply required for consideration of a petition to revive must be a Notice of Appeal (and appeal fee required by 37 CFR 41.20(b)(2)), an amendment that *prima facie* places the application in condition for allowance, a Request for Continued Examination (RCE) and submission (37 CFR 1.114), or the filing of a continuing application under 37 CFR 1.53(b). See MPEP 711.03(c)(III)(A)(2). No extensions of time pursuant to the provisions of 37 CFR 1.136(a) were obtained. Accordingly, the date of abandonment of this application is December 13, 2006.

The petition satisfies the requirements of 37 CFR 1.137(b) in that petitioner has supplied (1) the reply in the form of a Notice of Appeal; (2) the petition fee of $1,500; and (3) a proper statement of unintentional delay.

There is no indication that the person signing the instant petition was ever given a power of attorney or authorization of agent to prosecute the above-identified application. If the person signing the instant petition desires to receive future correspondence regarding this application, the appropriate power of attorney or authorization of agent must be submitted.

Telephone inquiries concerning this decision should be directed to the undersigned at (571) 272-3208.

This application is being referred to Technology Center AU 2879 to await the filing of an appeal brief or for such other appropriate reply as may be submitted to continue prosecution of the application.

Karen Creasy

Karen Creasy
Petitions Examiner
Office of Petitions

UNITED STATES PATENT AND TRADEMARK OFFICE

Commissioner for Patents
United States Patent and Trademark Office
P.O. Box 1450
Alexandria, VA 22313-1450
www.uspto.gov

DARBY & DARBY P.C.
P.O. BOX 770
Church Street Station
New York NY 10008-0770

MAILED

MAR 12 2010

OFFICE OF PETITIONS

In re Application of
Yoshio Ishii et al.
Application No. 10/813,558
Filed: March 29, 2004
Attorney Docket No. 04110/0201116-US0

DECISION ON PETITIONS

This is a decision on the request under 37 CFR 1.48(a), filed February 12, 2010, with a petition under 37 CFR 1.183 requesting a waiver of 37 CFR 1.48(a) to permit the deletion of originally named inventor Kozo Shirato (Shirato) without his statement that the error in inventorship occurred without deceptive intention on his part.

The request and petition are **dismissed**.

37 CFR 1.48(a) requires that an amendment to the named inventive entity be accompanied by:

(1) A request to correct the inventorship that sets forth the desired inventorship change;

(2) A statement from each person being added as an inventor and from each person being deleted as an inventor that the error in inventorship occurred without deceptive intention on his or her part;

(3) An oath or declaration by the actual inventor or inventors as required by § 1.63 or as permitted by §§ 1.42, 1.43 or § 1.47;

(4) The processing fee set forth in § 1.17(i); and

(5) If an assignment has been executed by any of the original named inventors, the written consent of the assignee (see § 3.73(b)).

The request under 37 CFR 1.48(a) lacks compliance with items (1) and (2).

In regard to item (2), the request lacks the statement from Shirato that the error in inventorship occurred without deceptive intention on his part. The petition under 37 CFR 1.183 requests waiver of this requirement since Shirato was presented with an opportunity to make such a statement but refused to make the statement.

On very infrequent occasions, the requirements of 37 CFR 1.48(a) have been waived upon the filing of a petition and fee under 37 C.F.R. 1.183 (along with the request and fee under 37 C.F.R. 1.48(a)) to permit the filing of a statement by less than all the parties required to submit a statement. In re Cooper, 230 USPQ 638, 639 (Dep. Assist. Comm'r Pat. 1986). However, such a waiver will not be considered unless the facts of record unequivocally support the correction sought. In re Hardee, 223 USPQ 1122, 1123 (Comm'r Pat. 1984). Here, the facts of record do not unequivocally support the correction sought since Shirato allegedly refuses to cooperate despite being given the opportunity. The reason for the refusal was not given in the declaration by Yoshio Ishii (Ishii). Moreover, while Ishii declared on the record that the refusal was made, he received information regarding the refusal from a third party, Toshizo Nozaki, and does not have first hand knowledge of the refusal. The refusal and reason for refusal should be stated in an affidavit or declaration by the party to whom the refusal was made, and in the event that the refusal is in writing, a copy of the document(s) evidencing that refusal must be made part of the affidavit or declaration. Also, an unexplained refusal alleged through reliance on third party information does not constitute an extraordinary situation in which justice requires waiver of a rule pursuant to 37 CFR 1.183. Accordingly, the USPTO will not relax the requirements of 37 CFR 1.48 by way of 37 CFR 1.183.

Petitioners may wish to consider MPEP 201.03 II.A., which states:

> An available remedy to obtain correction of inventorship where waiver of a required statement is not available to correct the inventorship in a particular application is to refile the application naming the correct inventive entity. A request under 37 CFR 1.48(a) would not then be required in the newly filed application as no correction would be needed. Furthermore, a request under 37 CFR 1.48(a) would also not be required in the prior application that was refiled, since the prior application will be abandoned. Benefit of the parent application's filing date would be available under 35 U.S.C. 120 provided there is at least one inventor overlap between the two applications.

In regard to item (1), the request does not clearly sets forth the desired inventorship change. The request and substitute declaration indicate that the inventorship should be changed to Yoshio Ishii, Koji Tanemura and Toshihiko Matsumoto. However, the supplemental Application Data Sheet (ADS) indicates that the inventors are Yoshio Ishii, Koji Tanemura, Toshihiko Matsumoto and Kozo Shirato. Although the totality of the request and petition suggest that the inventors after the desired change should be Yoshio Ishii, Koji Tanemura and Toshihiko Matsumoto, clarification of the record is required.

Deposit Account 04-0100 has been charged the fees under 37 C.F.R. §§ 1.17(i) and 1.17(f) for consideration of the petitions under 37 C.F.R. §§ 1.48 and 1.183, as authorized in the request under 37 CFR 1.48(a) and the PART B – FEE(S) TRANSMITTAL filed February 8, 2010.

Any inquiries concerning this communication may be directed to the undersigned at (571) 272-6692.

Christopher Bottorff
Petitions Examiner
Office of Petitions

UNITED STATES PATENT AND TRADEMARK OFFICE

COMMISSIONER FOR PATENTS
UNITED STATES PATENT AND TRADEMARK OFFICE
P.O. BOX 1450
ALEXANDRIA, VA 22313-1450
WWW.USPTO.GOV

Paper No. None

Crawford Maunu PLLC
1270 Northland Drive, Suite 390
St. Paul MN 55120

COPY MAILED

SEP 24 2004

OFFICE OF PETITIONS

In re Application of :
Walton Fong et al. :
Application No. 10/813,562 :
Filed: March 30, 2004 :
Attorney Docket No.: :
HSJ920030165US1 (HITG.048 :
Title: METHOD FOR CONTROLLING A :
BURNISH CYCLE TO MINIMIZE CYCLE :
TIME :

DECISION ON PETITION
UNDER 37 C.F.R. §1.53

This is a decision on the petition filed August 19, 2004, requesting that the above-identified application, including page 10 of the specification, be accorded a filing date of March 30, 2004 as part of the original disclosure.

The application was deposited on March 30, 2004. However, on June 15, 2004, the Office of Initial Patent Examination (OIPE) mailed a "Notice to File Missing Parts of Nonprovisional Application (notice)", stating that the application had been accorded a filing date, and advising applicants that page 10 of the specification appeared to have been omitted. The notice set a two-month period of reply, and further indicated that the filing fee, the oath or declaration, and a surcharge for the late submission of the same would be required.

In response, on August 19, 2004, applicants filed the present petition. The petition contains a certificate of mailing dated August 16, 2004. As such, a one-month extension of time has been charged to Petitioner's Deposit Account, as authorized in the petition. The petition is further accompanied by a copy of page 10 of the specification, along with a copy of applicants' postcard receipt acknowledging receipt of "Patent Application:

Pages Numbered 1-19, with 1pg. Abstract; 15 claims" in the United States Patent and Trademark Office (Office) on March 30, 2004. Applicants request that page 10 of the specification be accorded a filing date of March 30, 2004.

Receipt of the filing fee, a declaration, and the surcharge associated with the late submission of an oath or declaration is acknowledged.

It is noted that 13 pages of specification, 4 pages of claims, and a 1 page abstract have been located in the electronic file.

Upon review of the record, the above-mentioned page has not been located among the application papers. However, the evidence is convincing that the application papers deposited on March 30, 2004 included page 10 of the specification, and this sheet was subsequently misplaced in the Office.

Therefore, the application, including page 10 of the specification, was complete on filing and entitled to a filing date of March 30, 2004 as part of the original disclosure.

Accordingly, the petition is **GRANTED**.

The portion of the notice mailed June 15, 2004 pertaining to the missing page of specification was sent in error, and this portion is hereby **VACATED**. Therefore, no petition fee is necessary. The petition fee of $130 has been refunded to Petitioner's Deposit Account, as authorized in the petition.

The application file is being returned to OIPE for further processing with a filing date of March 30, 2004, using the original application papers filed on that date, as well as page 10 of the specification submitted on August 19, 2004, and for noting in Office records that this sheet was present on filing.

Telephone inquiries regarding this decision should be directed to the undersigned at (703) 305-0011. Please note that on approximately September 28, 2004, the Office of Petitions will relocate to the new PTO location in Alexandria. Although the mailing address will remain the same, the general phone number for the Office of Petitions which should be used for status requests will change to 571-272-3282, and the telephone number for the undersigned will change to 571-272-3225.

Paul Shanoski

Paul Shanoski
Senior Attorney
Office of Petitions
United States Patent and Trademark Office

UNITED STATES PATENT AND TRADEMARK OFFICE

COMMISSIONER FOR PATENTS
UNITED STATES PATENT AND TRADEMARK OFFICE
P.O. BOX 1450
ALEXANDRIA, VA 22313-1450
www.uspto.gov

COPY MAILED

SEP 20 2007

OFFICE OF PETITIONS

RICHARD A. FAGIN
P.O. BOX 1247
RICHMOND TX 77406-1247

In re Application of	:	
M. Turhan Taner, et al	:	
Application No. 10/813,577	:	NOTICE
Filed: March 30, 2004	:	
Attorney Docket No. RSI-04-01	:	

This is a notice regarding your request for acceptance of a fee deficiency submission under 37 CFR 1.28. On September 1, 1998, the Court of Appeals for the Federal Circuit held that 37 CFR 1.28(c) is the sole provision governing the time for correction of the erroneous payment of the issue fee as a small entity. **See DH Technology v. Synergystex International, Inc. 154 F.3d 1333, 47 USPQ2d 1865 (Fed. Cir. Sept. 1, 1998).**

The Office no longer investigates or rejects original or reissue applications under 37 CFR 1.56. **1098 Off. Gaz. Pat. Office 502 (January 3, 1989)**. Therefore, nothing in this Notice is intended to imply that an investigation was done.

Your fee deficiency submission under 37 CFR 1.28 is hereby **ACCEPTED**.

This application is no longer entitled to small entity status. Accordingly, all future fees paid in this application must be paid at the large entity rate.

Inquiries related to this communication should be directed to the undersigned at (571)272-3213.

Cheryl Gibson-Baylor
Petitions Examiner
Office of Petitions

Irvin Dingle
Petitions Examiner

UNITED STATES PATENT AND TRADEMARK OFFICE

Commissioner for Patents
United States Patent and Trademark Office
P.O. Box 1450
Alexandria, VA 22313-1450
www.uspto.gov

The McIntosh Group
8000 E. Prentice Ave.
Suite B-6
Englewood, CO 80111

MAILED

JUL 21 2005

Technology Center 2100

In re Application of:
Brant W. HOWARD, et al.
Application No.: 10/813,582
Filed: March 31, 2004
For: METHOD TO REPORT PERSONAL SECURITY INFORMATION ABOUT A PERSON

DECISION ON REQUEST TO WITHDRAW AS ATTORNEY OR AGENT

This is a decision on the Request to Withdraw from Representation filed June 13, 2005.

A grantable request to withdraw as attorney of record should indicate thereon the present mailing addresses of the attorney(s) who is/are withdrawing from the record and of the applicant. The request for withdrawal must be signed by every attorney seeking to withdraw or contain a clear indication that one attorney is signing on behalf of another/others. A request to withdraw will not be approved unless at least 30 (thirty) days would remain between the date of approval and the later of the expiration date of a time to file a response or the expiration date of the maximum time period which can be extended under 37 C.F.R. § 1.136(a). The effective date of withdrawal being the date of decision and not the date of request. See M.P.E.P. § 402.06. 37 C.F.R. § 1.36 further requires that the applicant or patent owner be notified of the withdrawal of the attorney or agent.

The request is **GRANTED**.

All future communications from the Office will be directed to the below-listed address until otherwise notified by applicant. This correspondence address is provided by the withdrawn attorney(s). Applicant is reminded of the obligation to promptly notify the Patent and Trademark Office (Office) of any change in correspondence address to ensure receipt of all communications from the Office.

Vincent N. Trans
Special Program Examiner
Technology Center 2100
Computer Architecture, Software, and
Information Security
571-272-3613

cc: Brant Howard
Safe Places, LLC
C/O Redd Shell Corporation
6334 South Racine Circle, Suite 202
Centennial, CO 80111

UNITED STATES PATENT AND TRADEMARK OFFICE

Commissioner for Patents
United States Patent and Trademark Office
P.O. Box 1450
Alexandria, VA 22313-1450
www.uspto.gov

JOHNSON & ASSOCIATES
P.O. BOX 90698
AUSTIN, TX 78709-0698

COPY MAILED

MAY 2 7 2008

OFFICE OF PETITIONS

In re Application of	:	
Susanne A. Paul, et. al.	:	
Application No. 10/813,589	:	ON PETITION
Filed: March 30, 2004	:	
Attorney Docket No. SIL.P0078	:	

This is a decision on the petition under the unintentional provisions of 37 CFR 1.137(b), filed on April 16, 2008, to revive the above-identified application.

The above application became abandoned for failure to file a timely reply to the final Office action mailed March 22, 2007. A Notice of Abandonment was mailed on January 4, 2008.

The petition satisfies the requirements of 37 CFR 1.137(b) in that petitioner has supplied (1) the reply in the form of a Request for Continued Examination (RCE) with the $810 filing fee and the submission under 37 CFR 1.114; (2) the petition fee of $1,540; and (3) a proper statement of unintentional delay. Therefore, the petition is **GRANTED**.

This application is being revived for consideration of the RCE filed on April 16, 2008.

The application file is being referred to Technology Center Art Unit 2815, for further processing.

Telephone inquiries concerning this decision should be directed to the undersigned at (571) 272-3226.

Andrea Smith
Petitions Examiner
Office of Petitions

UNITED STATES PATENT AND TRADEMARK OFFICE

UNITED STATES DEPARTMENT OF COMMERCE
United States Patent and Trademark Office
Address: COMMISSIONER FOR PATENTS
P.O. Box 1450
Alexandria, Virginia 22313-1450
www.uspto.gov

INGRASSIA FISHER & LORENZ, P.C. (GD)
7010 E. COCHISE ROAD
SCOTTSDALE, AZ 85253

Mail Date: 04/20/2010

Applicant	: George F. Elmasry	: DECISION ON REQUEST FOR
Patent Number	: 7616572	: RECALCULATION of PATENT
Issue Date	: 11/10/2009	: TERM ADJUSTMENT IN VIEW
Appliction No	: 10/813,603	: OF WYETH AND NOTICE OF INTENT TO
Filed	: 03/31/2004	: ISSUE CERTIFICATE OF CORRECTION
		:

The Request for Recalculation is **GRANTED** to the extent indicated.

The patent term adjustment has been determined to be **1149** days. The USPTO will *sua sponte* issue a certificate of correction reflecting the amount of PTA days determined by the recalculation.

Prior to the issuance of the certificate of correction, the USPTO will afford patentee an opportunity to be heard and request reconsideration. Accordingly, patentee has **one month or thirty (30) days**, whichever is longer, to file a request for reconsideration of this patent term adjustment calculation. See 35 U.S.C. 154(b)(3)(B)(ii) and 37 CFR 1.322(a)(4). No extensions of time will be granted under 37 CFR 1.136.

Patentee should use document code PET.OP if electronically filing a request for reconsideration of this patent term adjustment calculation. The patentee must also include the information required by 37 CFR 1.705(b)(2) and the fee required by 37 CFR 1.18(e). If patentee does not file a timely request for reconsideration of this patent term adjustment calculation including the information required by 37 CFR 1.705(b)(2) and the fee required by 37 CFR 1.18(e), the USPTO will issue a certificate of correction reflecting the PTA determination noted above.

Patentee should be aware that in order to preserve the right to review in the United States District Court for the District of Columbia of the USPTO patent term adjustment determination, patentee must ensure that he or she also take the steps required under 35 U.S.C. 154(b)(4)(A) in a timely manner. Nothing in the request for recalculation should be construed as providing an alternative time frame for commencing a civil action under 35 U.S.C. 154(b)(4)(A).

Any questions concerning this decision should be directed to the Office of Patent Legal Administration at 571-272-7702.

UNITED STATES PATENT AND TRADEMARK OFFICE

UNITED STATES DEPARTMENT OF COMMERCE
United States Patent and Trademark Office
Address: COMMISSIONER FOR PATENTS
P.O. Box 1450
Alexandria, Virginia 22313-1450
www.uspto.gov

APPLICATION NO.	FILING DATE	FIRST NAMED INVENTOR	ATTORNEY DOCKET NO.	CONFIRMATION NO.
10/813,604	03/31/2004	Thomas Palmieri	2006P26237 US	4357

28524 7590 01/22/2009
SIEMENS CORPORATION
INTELLECTUAL PROPERTY DEPARTMENT
170 WOOD AVENUE SOUTH
ISELIN, NJ 08830

EXAMINER
WRIGHT, PATRICIA KATHRYN

ART UNIT	PAPER NUMBER
1797	

MAIL DATE	DELIVERY MODE
01/22/2009	PAPER

Please find below and/or attached an Office communication concerning this application or proceeding.

The time period for reply, if any, is set in the attached communication.

UNITED STATES PATENT AND TRADEMARK OFFICE

Commissioner for Patents
United States Patent and Trademark Office
P.O. Box 1450
Alexandria, VA 22313-1450
www.uspto.gov

dss

1-22-09

In re Application of	: DECISION ON
Palmieri et al.	: PETITION
Serial No.10/813,604	:
Filed: March 31, 2004	:
For: MUTLIPATH ACCESS SYSTEM FOR USE IN AN	:
AUTOMATED IMMUNOASSAY ANALYZER	:

This is a decision on the PETITION UNDER 37 CFR 1.44 TO WITHDRAW THE RESTRICTION REQUIREMENT filed September 04, 2008.

On June 04, 2008, a three way restriction requirement by original presentation was made by the examiner in the FINAL rejection. The examiner took the position that two of the groups were related as combination /subcombinations and that the third group was related to the other groups as a process and apparatus for its practice. Applicants traversed the restriction requirement in a response filed August 04, 2008. The examiner maintained the restriction requirement in the Advisory Action mailed August 11, 2008.

On September 04, 2008, the instant petition under 37 CFR 1.144 was filed to formally request the withdrawal of the restriction requirement.

Applicant's position for the withdrawal of the restriction requirement is that the examiner has not grouped the claims properly as combination/subcombination and has not shown the separate groups are distinct.

DECISION

Sections 803 and 806.05(c) of the MPEP state:

803 Restriction - When Proper
Under the statute an application may properly be required to be restricted to one of two or more claimed inventions only if they are able to support separate pat-ents and they are either independent (MPEP § 806.04 - § 806.04(i)) or distinct (MPEP § 806.05 - §

806.05(c) Criteria of Distinctness for Combination, Subcombination, or Element of a Combination
In order to establish that combination and subcombination inventions are distinct, two-way distinctness must be demonstrated.
To support a requirement for restriction, both two-way distinctness and reasons for insisting on restriction are necessary, i.e., separate classification, status, or field of search. See MPEP § 808.02.

The inventions are distinct if it can be shown that a combination as claimed:
(A) does not require the particulars of the subcombination as claimed for patentability (to show novelty and unobviousness), and
(B) the subcombination can be shown to have utility either by itself or in other and different relations.
When these factors cannot be shown, such inventions are not distinct.

806.05(e) Process and Apparatus for Its Practice — Distinctness
In applications claiming inventions in different statutory categories, only one-way distinctness is generally needed to support a restriction requirement. See MPEP § 806.05(c).
Process and apparatus for its practice can be shown to be distinct inventions, if either or both of the following can be shown: (A) that the process as claimed can be practiced by another materially different apparatus or by hand; or (B) that the apparatus as claimed can be used to practice another and materially different process.
If the apparatus claims include a claim to "means" for practicing the process, the claim is a linking claim and must be examined with the elected invention. If it is ultimately allowed, rejoinder is required. See MPEP § 809.04.

In the restriction requirement mailed June 04, 2008, the examiner required restriction between I) claims 27-38 drawn to a multi path access system II) claims 39-46 drawn to multi path access system, and III) claims 47 to a method of moving samples. The examiner stated that the groups are distinct for the following that Group I and II are related as combination-subcombination and that the combination as claimed does not require the particulars of the subcombination as claimed because the combination does not a require a transfer shuttle, positioned to slide in a direction perpendicular to a portion of the transporter device, for moving vessels to and from the vessels holders. The subcombination has separate utility such as means mix the sample in vessels. The examiner further stated Groups (I or II)and III are related as apparatus and process and that the apparatus of Groups I and II, as claimed can be used to practice another and materially different process which does not require the step of optimizing the path for each sample such that samples having identical resource requirements travel an equal distance around the first continuous loop as required in Group III. .

The Applicants in the response filed August 04, 2008 argued that the groups are not distinct and that the examiner ahs failed to disclose such distinctness. The Applicants argued that Group I and Group II are not related as combination-subcombination in that all the particulars of Group I are found in Group II. The Applicants further argued that the Groups III and I and II are not distinct related process and apparatus in that MPEP §806.05(3) explains, "[t]he burden is on the examiner to provide reasonable examples that recite material differences." The assertion fails to state a material difference between the method as set forth and the process as allegedly capable of being carried out by the claimed apparatus.

In response to applicants arguments , the examiner in the office action mailed August 11, 2008 stated that the restriction requirement would be maintained as that claim 39 does not set forth all

the same components as claim 27. As pointed out in item 4 of the Final action (6/4/2008), claim 39 includes a transfer shuttle positioned to slide in a direction perpendicular to a portion of the transporter device which not required by claim 27. Similarly, the restriction from Groups I and II do provide a reasonable example as to how these Group can be used to practice another materially different process, i.e., these apparatus do not require the step of optimizing the path for each sample, as discussed in item 3 of the Final.

Applicants in response filed the instant Petition. Applicants argued again that the Groups are not related as subcombination-combination nor are they distinct process and apparatus for its practice.

First it is noted that Claim 27 is written in means plus function terminology "means for moving ...". and that the examiner has failed to present an analysis of the claims under 112 6th paragraph. As proper under MPEP 2181 112 6th paragraph analysis, a means plus function recitation is interpreted as being the structure disclosed in the specification or an obvious equivalent thereof. Looking to the specification it is clear such means for moving is the same as the transfer shuttle recited in claim 39, see specification page 4 lines 23-25. Thus since the claim 27 require all the particulars of claim 39 the Groups I and II are clearly not a distinct combination-subcombination.
Applicants arguments at page 3 of the instant petition regarding the distinctness of Group III and Groups I or II is persuasive in that it is clear that the examiner has not met the burden of showing examples that recite material differences.

Accordingly, the petition for withdrawal of the restriction requirement is **GRANTED**.

The application is being forwarded to the examiner to examine all of the pending claims and issue a new non-final office action accordingly.

/JACQUELINE STONE/
Jacqueline M. Stone, Director
Technology Center 1700
Chemical and Materials Engineering

Vincent M. Deluca
SIEMENS CORPORATION
INTELLECTUAL PROPERTY DEPARTMENT
170 WOOD AVENUE SOUTH
ISELIN NJ 08830

UNITED STATES PATENT AND TRADEMARK OFFICE

Commissioner for Patents
United States Patent and Trademark Office
P.O. Box 1450
Alexandria, VA 22313-1450
www.uspto.gov

MAIL

NOV 29 2007

DIRECTOR'S OFFICE
TECHNOLOGY CENTER 2600

Patrick G. Burns, Esq.
GREER, BURNS & CRAIN, LTD.
Suite 2500
300 South Wacker Drive
Chicago IL 60606

In Re Application of
NAGATANI, SHINPEI, et al.
Application Serial No. 10/813,613
Filed: March 30, 2004
For: **ILLUMINATION DEVICE AND DISPLAY APPARATUS INCLUDING THE SAME**

DECISION ON PETITION

This is a response to the petition to expunge papers filed October 1, 2007, pursuant to 37 CFR §1.59(b).

Petitioner requests that certain documents filed September 20, 2007 be expunged from the record.

The documents for which expungement is requested are not of record in the application file. As none of the documents were received, they cannot be expunged. However, a response was received October 1, 2007. The response has a certificate of mailing dated September 26, 2007. The response received October 1, 2007 is of record.

Accordingly the petition is **DISMISSED** as moot.

Kenneth A. Wieder
Quality Assurance Specialist
Technology Center 2600
Communications

UNITED STATES PATENT AND TRADEMARK OFFICE

COMMISSIONER FOR PATENTS
UNITED STATES PATENT AND TRADEMARK OFFICE
P.O. BOX 1450
ALEXANDRIA, VA 22313-1450
www.uspto.gov

JJGJr: 07-04

Paper No: __

FULBRIGHT & JAWORSKI L.L.P.
600 CONGRESS AVE.
SUITE 2400
AUSTIN TX 78701

COPY MAILED
JUL 13 2004
OFFICE OF PETITIONS

In re Application of	:	
Thomson, et al.	:	
Application No. 10/813,640	:	DECISION ON PETITION
Filed: 30 March, 2004	:	
Attorney Docket No.: THMC:015US/MTG	:	

This is a decision on the petition (styled as a "Petition to Correct and Incorrectly Entered Date-In" on an Express Mail Mailing Label Under 37 C.F.R. §1.10(d)), filed on 18 June, 2004, and seeking for the above-identified application a filing date of 29 March, 2004, instead of the presently accorded filing date of 30 March, 2004.

The petition is **DISMISSED**.

NOTES:

(1) Any request for reconsideration of this decision must be submitted within TWO (2) MONTHS from the mail date of this decision. Extensions of time under 37 C.F.R. §1.136(a) are permitted. The reconsideration request should include a cover letter entitled "Renewed Petition under 37 C.F.R. §1.10(d)."

(2) There will be no further reconsideration thereafter.

BACKGROUND AND ANALYSIS

The record reflects that:

- the instant application was received and given a filing date of 30 March, 2004;

- the petition recites that attachments/enclosures include, *inter alia*, copies of the Transmittal Cover Sheet, the return post card, US Postal Service (USPS) Express Mail Label No. EV414834354US, and indicates that the instant application was one of four deposited at the same time–however, two of the applications received a filing date of 29 March, 2004, and this application and one other received a filing date of 30 March, 2004;

- notably, the petition does not contain a reference to and is not accompanied by a copy of a mail log or other document recording the mail transactions that came into existence within one (1) business day of the mail deposit alleged;

Under the provisions of 37 C.F.R. §1.10(d),[1] "[a] ny showing pursuant to this paragraph must be corroborated by evidence from the USPS or that came into being after deposit and within one business day of the deposit of the correspondence in the "Express Mail Post Office to Addressee" service of the USPS." (Emphasis supplied.)

Petitioner has indicated via telephone that no such documentary evidence was created by his office in compliance with the regulation.

A review of the USPS "Track and Confirm" Shipment Details website data regarding USPS Express Mail Label No. EV414834354US indicates that the package was "ENROUTE, March 30, 2004, 4:49 pm, AUSTIN, TX 78799."

Therefore, as of this writing, Petitioner has failed to satisfy the showing requirement of the regulation and the petition must be and hereby is **dismissed**.

---

[1] The regulations at 37 C.F.R. §1.10 provide, in pertinent part:

§ 1.10 Filing of papers and fees by "Express Mail."

(a) Any correspondence received by the Patent and Trademark Office (Office) that was delivered by the "Express Mail Post Office to Addressee" service of the United States Postal Service (USPS) will be considered filed in the Office on the date of deposit with the USPS. The date of deposit with the USPS is shown by the "date-in" on the "Express Mail" mailing label or other official USPS notation. If the USPS deposit date cannot be determined, the correspondence will be accorded the Office receipt date as the filing date. See § 1.6(a).

* * *

(d) Any person filing correspondence under this section that was received by the Office and delivered by the "Express Mail Post Office to Addressee" service of the USPS, who can show that the "date-in" on the "Express Mail" mailing label or other official notation entered by the USPS was incorrectly entered or omitted by the USPS, may petition the Commissioner to accord the correspondence a filing date as of the date the correspondence is shown to have been deposited with the USPS, provided that:

(1) The petition is filed promptly after the person becomes aware that the Office has accorded, or will accord, a filing date based upon an incorrect entry by the USPS;

(2) The number of the "Express Mail" mailing label was placed on the paper(s) or fee(s) that constitute the correspondence prior to the original mailing by "Express Mail"; and

(3) The petition includes a showing which establishes, to the satisfaction of the Commissioner, that the requested filing date was the date the correspondence was deposited in the "Express Mail Post Office to Addressee" service prior to the last scheduled pickup for that day. Any showing pursuant to this paragraph must be corroborated by evidence from the USPS or that came into being after deposit and within one business day of the deposit of the correspondence in the "Express Mail Post Office to Addressee" service of the USPS.

* * *

(f) The Office may require additional evidence to determine if the correspondence was deposited as "Express Mail" with the USPS on the date in question. (Emphasis supplied.)

[48 Fed. Reg. 2708, Jan. 20, 1983, added effective Feb. 27, 1983; 48 Fed. Reg. 4285, Jan. 31, 1983, paras. (a) & (c), 49 Fed. Reg. 552, Jan. 4, 1984, effective Apr. 1, 1984; paras. (a)-(c) revised and paras. (d) - (f) added, 61 Fed. Reg. 56439, Nov. 1, 1996, effective Dec. 2, 1996; paras. (d) & (e) revised, 62 Fed. Reg. 53131, Oct. 10, 1997, effective Dec. 1, 1997]

The renewed petition, if any, must be accompanied by the corroborating evidence required by 37 C.F.R. §1.10(d).

Any further correspondence with regard to this matter should be addressed as follows:

By mail: (Effective 1 May, 2003)[2]
Commissioner for Patents
P.O. Box 1450
Alexandria, VA 22313-1450

By FAX: (703) 872-9306 (IFW Formal Filings)
ATTN.: Office of Petitions

By hand: Customer Service Window
Lobby/Room 1B03
Crystal Plaza Two
2011 South Clark Place
Arlington, VA 22202

Telephone inquiries concerning this decision may be directed to the undersigned at (703) 305-9199.

John J. Gillon, Jr.
Senior Attorney
Office of Petitions

[2] To determine the appropriate addresses for other subject-specific correspondence, refer to the USPTO Web site at www.uspto.gov.

UNITED STATES PATENT AND TRADEMARK OFFICE

COMMISSIONER FOR PATENTS
UNITED STATES PATENT AND TRADEMARK OFFICE
P.O. BOX 1450
ALEXANDRIA, VA 22313-1450
www.uspto.gov

JJGJr: 03-05

Paper No: __

FULBRIGHT & JAWORSKI L.L.P.
600 CONGRESS AVE.
SUITE 2400
AUSTIN TX 78701

COPY MAILED

MAR 18 2005

OFFICE OF PETITIONS

In re Application of	:	
Thomson, et al.	:	
Application No. 10/813,640	:	DECISION ON PETITION
Filed: 29 March, 2004	:	
Attorney Docket No.: THMC:015US/MTG	:	

This is a decision on the renewed petition under 37 C.F.R. §1.10(d)), filed on 18 February, 2005, and seeking for the above-identified application a filing date of 29 March, 2004, instead of the presently accorded filing date of 30 March, 2004.

The petition is **GRANTED**.

BACKGROUND AND ANALYSIS

The starting point of the discussion is the controlling law, *i.e.*, the regulations at 37 C.F.R. §1.10(d) provide in pertinent part:

* * *

> (d) Any person filing correspondence under this section that was received by the Office and delivered by the "Express Mail Post Office to Addressee" service of the USPS, who can show that the "date-in" on the "Express Mail" mailing label or other official notation entered by the USPS was incorrectly entered or omitted by the USPS, may petition the Director to accord the correspondence a filing date as of the date the correspondence is shown to have been deposited with the USPS, provided that:
>
> * * *
>
> (3) The petition includes a showing which

> establishes, to the satisfaction of the Director, that the requested filing date was the date the correspondence was deposited in the "Express Mail Post Office to Addressee" service prior to the last scheduled pickup for that day. Any showing pursuant to this paragraph must be corroborated by evidence from the USPS or that came into being after deposit and within one business day of the deposit of the correspondence in the "Express Mail Post Office to Addressee" service of the USPS. (Emphasis supplied.)[1]
>
> * * *

The record reflects that:

- while the instant application was received and given by the Office a filing date of 30 March, 2004, after the US Postal Service (USPS) assigned that date as the date of its acceptance of the package bearing USPS Express Mail Label No. EV414834354US, the original petition contended that the instant application submitted with that USPS Express Mail Label Number was one of but four applications filed contemporaneously at a USPS Express Mail drop box in Austin, Texas, at about 6:55 p.m. before a 7:00 p.m. scheduled pick-up on Monday, 29 March, 2004, however, the instant application and one other

---

[1] The regulations at 37 C.F.R. §1.10 provide, in pertinent part:

§ 1.10 Filing of papers and fees by "Express Mail."

(a) Any correspondence received by the Patent and Trademark Office (Office) that was delivered by the "Express Mail Post Office to Addressee" service of the United States Postal Service (USPS) will be considered filed in the Office on the date of deposit with the USPS. The date of deposit with the USPS is shown by the "date-in" on the "Express Mail" mailing label or other official USPS notation. If the USPS deposit date cannot be determined, the correspondence will be accorded the Office receipt date as the filing date. See § 1.6(a).

* * *

(b) Correspondence should be deposited directly with an employee of the USPS to ensure that the person depositing the correspondence receives a legible copy of the "Express Mail" mailing label with the "date-in" clearly marked. Persons dealing indirectly with the employees of the USPS (such as by deposit in an "Express Mail" drop box) do so at the risk of not receiving a copy of the "Express Mail" mailing label with the desired "date-in" clearly marked. The paper(s) or fee(s) that constitute the correspondence should also include the "Express Mail" mailing label number thereon. See paragraphs (c), (d) and (e) of this section.

* * *

(d) Any person filing correspondence under this section that was received by the Office and delivered by the "Express Mail Post Office to Addressee" service of the USPS, who can show that the "date-in" on the "Express Mail" mailing label or other official notation entered by the USPS was incorrectly entered or omitted by the USPS, may petition the Commissioner to accord the correspondence a filing date as of the date the correspondence is shown to have been deposited with the USPS, provided that:

(1) The petition is filed promptly after the person becomes aware that the Office has accorded, or will accord, a filing date based upon an incorrect entry by the USPS;

(2) The number of the "Express Mail" mailing label was placed on the paper(s) or fee(s) that constitute the correspondence prior to the original mailing by "Express Mail"; and

(3) The petition includes a showing which establishes, to the satisfaction of the Commissioner, that the requested filing date was the date the correspondence was deposited in the "Express Mail Post Office to Addressee" service prior to the last scheduled pickup for that day. Any showing pursuant to this paragraph must be corroborated by evidence from the USPS or that came into being after deposit and within one business day of the deposit of the correspondence in the "Express Mail Post Office to Addressee" service of the USPS.

* * *

(f) The Office may require additional evidence to determine if the correspondence was deposited as "Express Mail" with the USPS on the date in question. (Emphasis supplied.) [48 Fed. Reg. 2708, Jan. 20, 1983, added effective Feb. 27, 1983; 48 Fed. Reg. 4285, Jan. 31, 1983, paras. (a) & (c), 49 Fed. Reg. 552, Jan. 4, 1984, effective Apr. 1, 1984; paras. (a)-(c) revised and paras. (d) - (f) added, 61 Fed. Reg. 56439, Nov. 1, 1996, effective Dec. 2, 1996; paras. (d) & (e) revised, 62 Fed. Reg. 53131, Oct. 10, 1997, effective Dec. 1, 1997]

received a 30 March, 2004, filing date while the remaining two applications received the desired 29 March, 2004 filing date;

- the original petition was dismissed because Petitioner's showing was insufficient under 37 C.F.R. §1.10(d);

- the instant renewed petition recites that attachments/enclosures (including, *inter alia*, copies of the Transmittal Cover Sheet, the return post card, USPS Express Mail Label No. EV414834354US and declarations from Petitioner and two co-workers and copies of certain personal and office documents) evidence that the documents are such as are required under 37 C.F.R. §1.10(d) "that came into being after deposit and within one business day of the deposit of the correspondence in the 'Express Mail Post Office to Addressee'" to evidence the timely 29 March, 2004, deposit of the Express Mail package containing the instant application prior to the last scheduled pick-up of the day;

- in lieu of a mail log or other such office records, Petitioner particularly points to:

  –a client transmittal letter prepared by Ms. Julie Hohle (Ms. Hohle) consistent with her practice (with application docket number, invention title, and name of the first named inventor), which–though not dated and mailed until 1 April, 2004–was created and prepared, Ms. Hohle and Petitioner assert, within one (1) business day, and Petitioner and Ms. Hohle point to a copy of that letter with a document code number at the bottom left corner of the base, which number correlates with that on a "screen shot" of document-management system of Petitioner's office and demonstrates that the transmittal letter was created on 30 March, 2004, the day after Petitioner alleges timely deposit of the instant application into the USPS mailbox; and

  –a client billing document (also with application docket number, invention title (partial), and name of the first named inventor), which was created and prepared, Petitioner asserts, after deposit of the application with the USPS and within one (1) business day thereof;

- Petitioner further points to the declarations of Ms. Hohle and Ms. Sherry Stowers (Ms. Stowers) confirming that Ms. Hohle assisted in preparation of this application (and Ms. Stowers the international companion to it) as well as two other applications with which Petitioner left his office the early evening of 29 March, 2004, *en route* to the USPS post office to deposit the instant application (and others), and:

  –Ms. Stowers saw and spoke with Petitioner after he returned to

their office that evening and confirmed with him that he had accomplished the filing (i.e., deposit of the applications timely into the USPS mailbox before the last scheduled pick-up at 7:00 p.m. that evening), and

–Ms. Hohle confirmed with Petitioner the next morning, 30 March, 2004, that the filing (deposit) had occurred timely and, consistent with her office practice, prepared the client transmittal letter, which was then dated and mailed to the client on 1 April, 2004, along with a copy of the application;

- Petitioner also submits personal telephone and work-log entries, however, these are of limited benefit at best due to their abbreviated and/or undefined nature.

Clearly, Petitioner's satisfaction of the burden of proof in this matter has been made much more difficult by the lack of a mail log–particularly an Express Mail log–prepared after the deposit of the application in the USPS, the use of the mailbox rather than directly depositing the application with a USPS employee (see: 37 C.F.R. §1.10(b)) and/or another recording procedure providing an interlocking chain of evidence containing the USPS Express Mail number. Moreover, a practice of searching for (as well as obtaining and retaining for Petitioner's file) a printout/copy of the Track & Confirm data from the USPS website within a day (or two) of deposit can alert Petitioner that a problem may exist with the USPS assignment of an acceptance date of the Express Mail parcel–and, thus, with the filing date to be assigned to the application by the Office.

Nonetheless, Petitioner has made a sufficient showing herein.

Accordingly, the petition hereby is **granted**.

The petition fee is not waived because the error was not that of the Office, and was charged as authorized.

The instant file is released to OIPE to correct the filing date so as to accord to the instant application a filing date of 29 March, 2004, and to mail to Petitioner a corrected filing receipt reflecting a filing date of 29 March, 2004.

Telephone inquiries concerning this decision may be directed to the undersigned at (571) 272-3214.

John J. Gillon, Jr.
Senior Attorney
Office of Petitions

10/813640
18 May 05

UNITED STATES PATENT AND TRADEMARK OFFICE

COMMISSIONER FOR PATENTS
UNITED STATES PATENT AND TRADEMARK OFFICE
P.O. BOX 1450
ALEXANDRIA, VA 22313-1450
www.uspto.gov

JJGJr: 03-05

Paper No: __

FULBRIGHT & JAWORSKI L.L.P.
600 CONGRESS AVE.
SUITE 2400
AUSTIN TX 78701

COPY MAILED

MAR 18 2005

OFFICE OF PETITIONS

In re Application of	:	
Thomson, et al.	:	
Application No. 10/813,640	:	DECISION ON PETITION
Filed: 29 March, 2004	:	
Attorney Docket No.: THMC:015US/MTG	:	

This is a decision on the renewed petition under 37 C.F.R. §1.10(d)), filed on 18 February, 2005, and seeking for the above-identified application a filing date of 29 March, 2004, instead of the presently accorded filing date of 30 March, 2004.

The petition is **GRANTED**.

BACKGROUND AND ANALYSIS

The starting point of the discussion is the controlling law, *i.e.*, the regulations at 37 C.F.R. §1.10(d) provide in pertinent part:

* * *

> (d) Any person filing correspondence under this section that was received by the Office and delivered by the "Express Mail Post Office to Addressee" service of the USPS, who can show that the "date-in" on the "Express Mail" mailing label or other official notation entered by the USPS was incorrectly entered or omitted by the USPS, may petition the Director to accord the correspondence a filing date as of the date the correspondence is shown to have been deposited with the USPS, provided that:
>
> * * *
>
> (3) The petition includes a showing which

> establishes, to the satisfaction of the Director, that the requested filing date was the date the correspondence was deposited in the "Express Mail Post Office to Addressee" service prior to the last scheduled pickup for that day. Any showing pursuant to this paragraph must be corroborated by evidence from the USPS or that came into being after deposit and within one business day of the deposit of the correspondence in the "Express Mail Post Office to Addressee" service of the USPS. (Emphasis supplied.)[1]
>
> * * *

The record reflects that:

- while the instant application was received and given by the Office a filing date of 30 March, 2004, after the US Postal Service (USPS) assigned that date as the date of its acceptance of the package bearing USPS Express Mail Label No. EV414834354US, the original petition contended that the instant application submitted with that USPS Express Mail Label Number was one of but four applications filed contemporaneously at a USPS Express Mail drop box in Austin, Texas, at about 6:55 p.m. before a 7:00 p.m. scheduled pick-up on Monday, 29 March, 2004, however, the instant application and one other

---

[1] The regulations at 37 C.F.R. §1.10 provide, in pertinent part:

§ 1.10 Filing of papers and fees by "Express Mail."

(a) Any correspondence received by the Patent and Trademark Office (Office) that was delivered by the "Express Mail Post Office to Addressee" service of the United States Postal Service (USPS) will be considered filed in the Office on the date of deposit with the USPS. The date of deposit with the USPS is shown by the "date-in" on the "Express Mail" mailing label or other official USPS notation. If the USPS deposit date cannot be determined, the correspondence will be accorded the Office receipt date as the filing date. See § 1.6(a).

* * *

(b) Correspondence should be deposited directly with an employee of the USPS to ensure that the person depositing the correspondence receives a legible copy of the "Express Mail" mailing label with the "date-in" clearly marked. Persons dealing indirectly with the employees of the USPS (such as by deposit in an "Express Mail" drop box) do so at the risk of not receiving a copy of the "Express Mail" mailing label with the desired "date-in" clearly marked. The paper(s) or fee(s) that constitute the correspondence should also include the "Express Mail" mailing label number thereon. See paragraphs (c), (d) and (e) of this section.

* * *

(d) Any person filing correspondence under this section that was received by the Office and delivered by the "Express Mail Post Office to Addressee" service of the USPS, who can show that the "date-in" on the "Express Mail" mailing label or other official notation entered by the USPS was incorrectly entered or omitted by the USPS, may petition the Commissioner to accord the correspondence a filing date as of the date the correspondence is shown to have been deposited with the USPS, provided that:

(1) The petition is filed promptly after the person becomes aware that the Office has accorded, or will accord, a filing date based upon an incorrect entry by the USPS;

(2) The number of the "Express Mail" mailing label was placed on the paper(s) or fee(s) that constitute the correspondence prior to the original mailing by "Express Mail"; and

(3) The petition includes a showing which establishes, to the satisfaction of the Commissioner, that the requested filing date was the date the correspondence was deposited in the "Express Mail Post Office to Addressee" service prior to the last scheduled pickup for that day. Any showing pursuant to this paragraph must be corroborated by evidence from the USPS or that came into being after deposit and within one business day of the deposit of the correspondence in the "Express Mail Post Office to Addressee" service of the USPS.

* * *

(f) The Office may require additional evidence to determine if the correspondence was deposited as "Express Mail" with the USPS on the date in question. (Emphasis supplied.) [48 Fed. Reg. 2708, Jan. 20, 1983, added effective Feb. 27, 1983; 48 Fed. Reg. 4285, Jan. 31, 1983, paras. (a) & (c), 49 Fed. Reg. 552, Jan. 4, 1984, effective Apr. 1, 1984; paras. (a)-(c) revised and paras. (d) - (f) added, 61 Fed. Reg. 56439, Nov. 1, 1996, effective Dec. 2, 1996; paras. (d) & (e) revised, 62 Fed. Reg. 53131, Oct. 10, 1997, effective Dec. 1, 1997]

received a 30 March, 2004, filing date while the remaining two applications received the desired 29 March, 2004 filing date;

- the original petition was dismissed because Petitioner's showing was insufficient under 37 C.F.R. §1.10(d);

- the instant renewed petition recites that attachments/enclosures (including, *inter alia*, copies of the Transmittal Cover Sheet, the return post card, USPS Express Mail Label No. EV414834354US and declarations from Petitioner and two co-workers and copies of certain personal and office documents) evidence that the documents are such as are required under 37 C.F.R. §1.10(d) "that came into being after deposit and within one business day of the deposit of the correspondence in the 'Express Mail Post Office to Addressee'" to evidence the timely 29 March, 2004, deposit of the Express Mail package containing the instant application prior to the last scheduled pick-up of the day;

- in lieu of a mail log or other such office records, Petitioner particularly points to:

  –a client transmittal letter prepared by Ms. Julie Hohle (Ms. Hohle) consistent with her practice (with application docket number, invention title, and name of the first named inventor), which–though not dated and mailed until 1 April, 2004–was created and prepared, Ms. Hohle and Petitioner assert, within one (1) business day, and Petitioner and Ms. Hohle point to a copy of that letter with a document code number at the bottom left corner of the base, which number correlates with that on a "screen shot" of document-management system of Petitioner's office and demonstrates that the transmittal letter was created on 30 March, 2004, the day after Petitioner alleges timely deposit of the instant application into the USPS mailbox; and

  –a client billing document (also with application docket number, invention title (partial), and name of the first named inventor), which was created and prepared, Petitioner asserts, after deposit of the application with the USPS and within one (1) business day thereof;

- Petitioner further points to the declarations of Ms. Hohle and Ms. Sherry Stowers (Ms. Stowers) confirming that Ms. Hohle assisted in preparation of this application (and Ms. Stowers the international companion to it) as well as two other applications with which Petitioner left his office the early evening of 29 March, 2004, *en route* to the USPS post office to deposit the instant application (and others), and:

  –Ms. Stowers saw and spoke with Petitioner after he returned to

their office that evening and confirmed with him that he had accomplished the filing (i.e., deposit of the applications timely into the USPS mailbox before the last scheduled pick-up at 7:00 p.m. that evening), and

–Ms. Hohle confirmed with Petitioner the next morning, 30 March, 2004, that the filing (deposit) had occurred timely and, consistent with her office practice, prepared the client transmittal letter, which was then dated and mailed to the client on 1 April, 2004, along with a copy of the application;

- Petitioner also submits personal telephone and work-log entries, however, these are of limited benefit at best due to their abbreviated and/or undefined nature.

Clearly, Petitioner's satisfaction of the burden of proof in this matter has been made much more difficult by the lack of a mail log–particularly an Express Mail log–prepared after the deposit of the application in the USPS, the use of the mailbox rather than directly depositing the application with a USPS employee (see: 37 C.F.R. §1.10(b)) and/or another recording procedure providing an interlocking chain of evidence containing the USPS Express Mail number. Moreover, a practice of searching for (as well as obtaining and retaining for Petitioner's file) a printout/copy of the Track & Confirm data from the USPS website within a day (or two) of deposit can alert Petitioner that a problem may exist with the USPS assignment of an acceptance date of the Express Mail parcel–and, thus, with the filing date to be assigned to the application by the Office.

Nonetheless, Petitioner has made a sufficient showing herein.

Accordingly, the petition hereby is **granted**.

The petition fee is not waived because the error was not that of the Office, and was charged as authorized.

The instant file is released to OIPE to correct the filing date so as to accord to the instant application a filing date of 29 March, 2004, and to mail to Petitioner a corrected filing receipt reflecting a filing date of 29 March, 2004.

Telephone inquiries concerning this decision may be directed to the undersigned at (571) 272-3214.

John J. Gillon, Jr.
Senior Attorney
Office of Petitions

UNITED STATES PATENT AND TRADEMARK OFFICE

COMMISSIONER FOR PATENTS
UNITED STATES PATENT AND TRADEMARK OFFICE
P.O. BOX 1450
ALEXANDRIA, VA 22313-1450
www.uspto.gov

COPY MAILED

DEC 0 8 2009

OFFICE OF PETITIONS

FITCH EVEN TABIN & FLANNERY
120 SOUTH LASALLE STREET
SUITE 1600
CHICAGO IL 60603-3406

In re Patent No. 7,530,303 :
Issued: May 12, 2009 :
Application No. 10/813,645 : PATENT TERM ADJUSTMENT
Filed: March 30, 2004 :
Dkt. No.: 1410/67404 :

This is a decision on the "APPLICATION FOR PATENT TERM ADJUSTMENT UNDER 37 C.F.R. § 1.705(b)," filed March 27, 2009. This matter is being properly treated as an application for patent term adjustment pursuant to 37 CFR 1.705(d).

The application for patent term adjustment under 37 CFR 1.705(b) was filed March 27, 2009. However, prior to a decision on the merits of the application for patent term adjustment, the application matured into U.S. Pat. No. 7,530,303 on May 12, 2009. The patent issued with a patent term adjustment of 1,199 days.

Patentees request correction of the patent term adjustment from 1,199 days to 1,506 days. Patentees request this correction on the sole basis that the Office took in excess of three years to issue the above-referenced patent. Patentees reference Wyeth v. Dudas, Civil Action No. 07-1492, 580 F. Supp. 2d 138, 88 U.S.P.Q. 2d 1538 (D.D.C. Sept. 30, 2008) and assert that the patent is entitled to an adjustment of 1,506 days (1,199 days pursuant to 35 USC 154(b)(1)(A) *plus* 837 days pursuant to 35 USC 154(b)(1)(B) *less* 530 days of overlap). The request was predicated upon the presumption that the patent would issue July 14, 2009 when in fact the patent issued May 12, 2009.

The application for patent term adjustment (PTA) under 37 CFR 1.705(d) is **DISMISSED**.

Under 37 CFR 1.703(f), patentees are entitled to a period of patent term adjustment equal to the period of delays based on the grounds set forth in 37 CFR 1.702 reduced by the period of time equal to the period of time during which patentees failed to engage in reasonable efforts to conclude prosecution pursuant to 37 CFR 1.704. In other words, patentees are entitled to the period of Office delay reduced by the period of applicant delay.

The Office asserts that as of the issuance of the patent on May 12, 2009, the application was pending three years and 774 days after its filing date (March 31, 2007 to May 12, 2009). The Office asserts that certain action was not taken within the specified time frame, and thus, the application was pending 14 months and 1,199 days prior to the mailing of the non-final Office action on September 10, 2008. At issue is whether patentees should accrue 774 days of patent term adjustment for the Office taking in excess of three years to issue the patent, as well as 1,199

days for Office failure to take a certain action within a specified time frame (or examination delay).

The Office contends that the period of 774 days of delay in issuance of the patent under 37 CFR 1.702(b) overlaps with the period of 1,199 days of examination delay under 37 CFR 1.702(a). Patentees' calculation of the period of overlap is inconsistent with the Office's interpretation of this provision. 35 U.S.C. 154(b)(2)(A) limits the adjustment of patent term, as follows:

35 U.S.C. 154(b)(2)(A) limits the adjustment of patent term, as follows:

> To the extent that the periods of delay attributable to grounds specified in paragraph (1) overlap, the period of any adjustment granted under this subsection shall not exceed the actual number of days the issuance of the
> patent was delayed.

As explained in *Explanation of 37 CFR 1.703(f)*[1] *and of the United States Patent and Trademark Office Interpretation of 35 U.S.C. 154(b)(2)(A)*, 69 Fed. Reg. 34283 (June 21, 2004), the Office interprets 35 U.S.C. 154(b)(2)(A) as permitting either patent term adjustment under 35 U.S.C. 154(b)(1)(A)(i)-(iv), or patent term adjustment under 35 U.S.C. 154(b)(1)(B), but not as permitting patent term adjustment under both 35 U.S.C. 154(b)(1)(A)(i)-(iv) and 154(b)(1)(B). Accordingly, the Office implements the overlap provision as follows:

> If an application is entitled to an adjustment under 35 U.S.C. 154(b)(1)(B), the entire period during which the application was pending (except for periods excluded under 35 U.S.C. 154(b)(1)(B)(i)-(iii)), and not just the period beginning three years after the actual filing date of the application, is the period of delay under 35 U.S.C. 154(b)(1)(B) in determining whether periods of delay overlap under 35 U.S.C. 154(b)(2)(A). Thus, any days of delay for Office issuance of the patent more than 3 years after the filing date of the application, which overlap with the days of patent term adjustment accorded prior to the issuance of the patent will not result in any additional patent term adjustment. See 35 U.S.C. 154(b)(1)(B), 35 U.S.C. 154(b)(2)(A), and 37 CFR § 1.703(f). See *Changes to Implement Patent Term Adjustment Under Twenty Year Term; Final Rule*, 65 Fed. Reg. 54366 (Sept. 18, 2000). See also *Revision of Patent Term Extension and Patent Term Adjustment Provisions; Final Rule*, 69 Fed. Reg. 21704 (April 22, 2004), 1282 Off. Gaz. Pat. Office 100 (May 18, 2004).

Further, as stated in the *Explanation of 37 CFR 1.703(f) and of the United States Patent and Trademark Office Interpretation of 35 U.S.C. 154(b)(2)(A)*, the Office has consistently taken the position that if an application is entitled to an adjustment under the three-year pendency provision of 35 U.S.C. 154(b)(1)(B), the entire period during which the application was pending

---

[1] Likewise, 37 CFR 1.703(f) provides that:

> To the extent that periods of delay attributable to the grounds specified in §1.702 overlap, the period of adjustment granted under this section shall not exceed the actual number of days the issuance of the patent was delayed.

before the Office (except for periods excluded under 35 U.S.C. 154(b)(1)(B)(i)-(iii)), and not just the period beginning three years after the actual filing date of the application, is the relevant period under 35 U.S.C. 154(b)(1)(B) in determining whether periods of delay "overlap" under 35 U.S.C. 154(b)(2)(A).

This interpretation is consistent with the statute. Taken together the statute and rule provide that to the extent that periods of delay attributable to grounds specified in 35 U.S.C. 154(b)(1) and in corresponding §1.702 overlap, the period of adjustment granted shall not exceed the actual number of days the issuance of the patent was delayed.

In this instance, the relevant period under 35 U.S.C. 154(b)(1)(B) in determining whether periods of delay "overlap" under 35 U.S.C. 154(b)(2)(A) is the period during which the application was pending before the Office beginning on the application filing date under 35 U.S.C. 111(a), March 30, 2004, and ending on the date that the patent issued, May 12, 2009.

Pursuant to 35 U.S.C. 154(b)(1)(A) and 37 CFR 1.702(a)(1), the application was pending 14 months and 1,199 days prior to the issuance of the non-final Office action on September 10, 2008. Pursuant to 35 U.S.C. 154(b)(1)(B) and 37 CFR 1.702(b), the application was pending three years and 774 days prior to the issuance of the patent on May 12, 2009.

The 774 days of delay in issuance of the patent under 37 CFR 1.702(b) overlap with the 1,199 days of patent term adjustment under 37 CFR 1.702(a). Entry of both the 774 days and the 1,199 days is neither permitted nor warranted given that 1,199 days is the actual number of days issuance of the patent was delayed.

Accordingly, at issuance, having considered the 774 days of Office delay under the three-year pendency provision in conjunction with the 1,199 days of examination delay, the Office properly entered 702 days of patent term adjustment.

In view thereof, no adjustment to the patent term will be made.

No additional fees are due in connection with this matter.

Telephone inquiries specific to this matter should be directed to the undersigned at (571) 272-3205.

Alesia M. Brown
Petitions Attorney
Office of Petitions

UNITED STATES PATENT AND TRADEMARK OFFICE

COMMISSIONER FOR PATENTS
UNITED STATES PATENT AND TRADEMARK OFFICE
P.O. BOX 1450
ALEXANDRIA, VA 22313-1450
www.uspto.gov

HDSL
4331 STEVENS BATTLE LANE
FAIRFAX, VA 22033

COPY MAILED

MAY 04 2007

OFFICE OF PETITIONS

In re Application of	:	
CHIUN	:	
Application No.: 10/813,674	:	DECISION ON PETITION
Filing Date: March 31, 2004	:	UNDER 37 CFR 1.137(B)
Attorney Docket No.: 4504-098	:	

This is a decision on the petition under 37 CFR 1.137(b), filed November 29, 2006, to revive the above-identified application.

The petition is **GRANTED.**

The above-identified application became abandoned for failure to reply in a timely manner to the non-final Office action mailed April 10, 2006, which set a three month shortened statutory period for response. No extensions of time under the provisions of 37 CFR 1.136(a) were obtained. Accordingly, by operation of law, the above-identified application became abandoned on July 11, 2006.

The petition satisfies the conditions for revival pursuant to the provisions of 37 CFR 1.137(b) in that (1) the reply in the form of an amendment and remarks; (2) the petition fee; and (3) the required statement of unintentional delay have been received. Accordingly, the reply to the non-final Office action mailed April 10, 2006 is accepted as having been unintentionally delayed.

Applicant is advised that it is not apparent whether the person signing the statement of unintentional delay was in a position to have firsthand or direct knowledge of the facts and circumstances of the delay at issue. Nevertheless, such statement is being treated as having been made as the result of a reasonable inquiry into the facts and circumstances of such delay. See 37 CFR 10.18(b) and Changes to Patent Practice and Procedure, Final Rule Notice, 62 Fed. Reg. 53131, 53178 (October 10, 1997), 1203 Off. Gaz. Pat. Office 63, 103 (October 21, 1997). In the event that such an inquiry has not been made, petitioner must make such an inquiry. If such inquiry results in the discovery that it is not correct that the entire delay in filing the required reply from the due date for the reply until the filing of a grantable petition pursuant to 37 CFR 1.137(b) was unintentional, petitioner must notify the Office.

This application is being referred to Technology Center AU 2861 for appropriate action on the reply in due course.

Telephone inquiries concerning this decision should be directed to the undersigned at (571) 272-3303.

Bryan Lin

Bryan Lin
Legal Examiner
Office of the Deputy Commissioner
for Patent Examination Policy

UNITED STATES PATENT AND TRADEMARK OFFICE

Commissioner for Patents
United States Patent and Trademark Office
P.O. Box 1450
Alexandria, VA 22313-1450
www.uspto.gov

STERNE, KESSLER, GOLDSTEIN & FOX P.L.L.C.
1100 NEW YORK AVENUE, N.W.
WASHINGTON, DC 20005

COPY MAILED

AUG 04 2008

OFFICE OF PETITIONS

In re Application of	:	
TINNEMANS, et al.	:	
Application No. 10/813,687	:	DECISION GRANTING PETITION
Filed: March 31, 2004	:	UNDER 37 CFR 1.313(c)(2)
Attorney Docket No. **1857.7580002**	:	

This is a decision on the petition under 37 CFR 1.313(c)(2), filed August 1, 2008, to withdraw the above-identified application from issue after payment of the issue fee.

The petition is **GRANTED.**

The above-identified application is withdrawn from issue for consideration of a submission under 37 CFR 1.114 (request for continued examination). *See* 37 CFR 1.313(c)(2).

Petitioner is advised that the issue fee paid on June 26, 2008 cannot be refunded. If, however, this application is again allowed, petitioner may request that it be applied towards the issue fee required by the new Notice of Allowance.[1]

Telephone inquiries should be directed to the undersigned at (571) 272-7253.

This application is being referred to Technology Center AU 2851 for processing of the request for continued examination under 37 CFR 1.114 and for consideration of the concurrently filed information disclosure statement.

Monica A. Graves
Petitions Examiner
Office of Petitions

---

[1] *The request to apply the issue fee to the new Notice may be satisfied by completing and returning the new Part B – Fee(s) Transmittal Form (along with any balance due at the time of submission). Petitioner is advised that the Issue Fee Transmittal Form* ***must*** *be completed and timely submitted to avoid abandonment of the application.*

24 FEB 2004

UNITED STATES PATENT AND TRADEMARK OFFICE

COMMISSIONER FOR PATENTS
UNITED STATES PATENT AND TRADEMARK OFFICE
P.O. BOX 1450
ALEXANDRIA, VA 22313-1450
www.uspto.gov

Richard B. Lazarus
Barnes & Thornburg
750 17th Street, N.W., Suite 900
Washington, D.C. 20006

In re Application of
FATTAL, et al.
PCT No.: PCT/US03/01217
Int. Filing Date: 15 January 2003
Priority Date: 15 January 2002
Attorney's Docket No.: YIS-009PCT
For: SYSTEM AND METHOD FOR COMPRESSING THE DYNAMIC RANGE OF AN IMAGE

DECISION ON PETITION

This decision is in response to applicant's "Petition For Filing Date Under 35 U.S.C. 111(a)" filed 19 February 2004 in the United States Patent and Trademark Office (USPTO).

BACKGROUND

On 15 January 2003, applicant filed the present International Application with the United States Receiving Office (RO/US) claiming priority to an earlier application filed 15 January 2002.

On 28 January 2003, applicant was mailed a "Notification of Transmittal of Purported International Application to The International Bureau as Receiving Office And Invitation to Pay Fee" (Form PCT/RO/151) informing applicant that the notification was being sent to the International Bureau as receiving Office together with the above-mentioned international application. The RO/US is not competent on account of the nationality and residence of the applicant.

On 19 February 2004, applicant filed the present petition seeking, in addition to the referenced international application, a filing date under 35 U.S.C. 111(a).

DISCUSSION

A review of the application file and USPTO electronic databases finds that applicant's initial filing of 15 January 2003 contained papers for both an international application and a filing under 35 U.S.C. 111(a). Specifically, applicant filed both a "Transmittal Letter to the United States Receiving Office" (Form PTO-1382) and a separate cover letter enclosing a "patent application." In addition, applicant provided two distinct filings as to the respective description, claims and abstract. The description, claims and abstract for the international application totals 24 pages whereas the description, claims and abstract for the domestic patent application totals 31

pages. Thus, it is clear that applicant filed two distinct applications on 15 January 2003. Applicant has suggested three possible avenues of relief. Applicant is advised that the papers filed with the USPTO on 15 January 2003 and containing the stamp thereon will be removed from the present international application file and used to create a new, separate 35 U.S.C. 111(a) application file.

CONCLUSION

As detailed above, applicant's petition is **GRANTED**.

The application will is being forwarded to Office of Initial Patent Examination for processing as a regular national application under 35 U.S.C. 111(a) with a filing date of 15 January 2003.

Derek A. Putonen
Attorney Advisor
Office of PCT Legal Administration
Tel: 703-305-0130
Fax: 703-308-6459

UNITED STATES PATENT AND TRADEMARK OFFICE

UNITED STATES DEPARTMENT OF COMMERCE
United States Patent and Trademark Office
Address: COMMISSIONER FOR PATENTS
P.O. Box 1450
Alexandria, Virginia 22313-1450
www.uspto.gov

APPL NO.	FILING OR 371 (c) DATE	ART UNIT	FIL FEE REC'D	ATTY.DOCKET NO	DRAWINGS	TOT CLMS	IND CLMS
10/813,692	05/14/2003	1614	2008	HQM-00804		56	8

CONFIRMATION NO. 4140

UPDATED FILING RECEIPT

OC000000014185596

26339
PATENT GROUP
CHOATE, HALL & STEWART
EXCHANGE PLACE, 53 STATE STREET
BOSTON, MA 02109

Date Mailed: 10/25/2004

Receipt is acknowledged of this regular Patent Application. It will be considered in its order and you will be notified as to the results of the examination. Be sure to provide the U.S. APPLICATION NUMBER, FILING DATE, NAME OF APPLICANT, and TITLE OF INVENTION when inquiring about this application. Fees transmitted by check or draft are subject to collection. Please verify the accuracy of the data presented on this receipt. **If an error is noted on this Filing Receipt, please write to the Office of Initial Patent Examination's Filing Receipt Corrections, facsimile number 703-746-9195. Please provide a copy of this Filing Receipt with the changes noted thereon. If you received a "Notice to File Missing Parts" for this application, please submit any corrections to this Filing Receipt with your reply to the Notice. When the USPTO processes the reply to the Notice, the USPTO will generate another Filing Receipt incorporating the requested corrections (if appropriate).**

Applicant(s)

Christophe Michot, Grenoble, FRANCE;
Michel Armand, Montreal, CANADA;

Power of Attorney: The patent practitioners associated with Customer Number **05514**.

Domestic Priority data as claimed by applicant

This application is a CON of 09/906,702 07/18/2001 ABN
which is a CON of 09/390,648 09/07/1999 PAT 6,670,424
which is a CON of PCT/CA99/00078 01/29/1999

Foreign Applications

CANADA 2,228,467 01/30/1998
CANADA 2,236,197 04/28/1998

If Required, Foreign Filing License Granted: 06/04/2004

The country code and number of your priority application, to be used for filing abroad under the Paris Convention, is US10/813,692

Projected Publication Date: 02/03/2005

Non-Publication Request: No

Early Publication Request: No

Title

Cross-linked sulphonated polymers and their preparation process

Preliminary Class

514

LICENSE FOR FOREIGN FILING UNDER
Title 35, United States Code, Section 184
Title 37, Code of Federal Regulations, 5.11 & 5.15

GRANTED

The applicant has been granted a license under 35 U.S.C. 184, if the phrase "IF REQUIRED, FOREIGN FILING LICENSE GRANTED" followed by a date appears on this form. Such licenses are issued in all applications where the conditions for issuance of a license have been met, regardless of whether or not a license may be required as set forth in 37 CFR 5.15. The scope and limitations of this license are set forth in 37 CFR 5.15(a) unless an earlier license has been issued under 37 CFR 5.15(b). The license is subject to revocation upon written notification. The date indicated is the effective date of the license, unless an earlier license of similar scope has been granted under 37 CFR 5.13 or 5.14.

This license is to be retained by the licensee and may be used at any time on or after the effective date thereof unless it is revoked. This license is automatically transferred to any related applications(s) filed under 37 CFR 1.53(d). This license is not retroactive.

The grant of a license does not in any way lessen the responsibility of a licensee for the security of the subject matter as imposed by any Government contract or the provisions of existing laws relating to espionage and the national security or the export of technical data. Licensees should apprise themselves of current regulations especially with respect to certain countries, of other agencies, particularly the Office of Defense Trade Controls, Department of State (with respect to Arms, Munitions and Implements of War (22 CFR 121-128)); the Office of Export Administration, Department of Commerce (15 CFR 370.10 (j)); the Office of Foreign Assets Control, Department of Treasury (31 CFR Parts 500+) and the Department of Energy.

NOT GRANTED

No license under 35 U.S.C. 184 has been granted at this time, if the phrase "IF REQUIRED, FOREIGN FILING LICENSE GRANTED" DOES NOT appear on this form. Applicant may still petition for a license under 37 CFR 5.12, if a license is desired before the expiration of 6 months from the filing date of the application. If 6 months has lapsed from the filing date of this application and the licensee has not received any indication of a secrecy order under 35 U.S.C. 181, the licensee may foreign file the application pursuant to 37 CFR 5.15(b).

UNITED STATES PATENT AND TRADEMARK OFFICE

UNITED STATES DEPARTMENT OF COMMERCE
United States Patent and Trademark Office
Address: COMMISSIONER FOR PATENTS
P.O. Box 1450
Alexandria, Virginia 22313-1450
www.uspto.gov

HAMILTON, BROOK, SMITH & REYNOLDS, P.C.
530 VIRGINIA ROAD
P.O. BOX 9133
CONCORD, MA 01742-9133

Mail Date: 04/21/2010

Applicant	: Daniel J. Marchok	: DECISION ON REQUEST FOR
Patent Number	: 7616553	: RECALCULATION of PATENT
Issue Date	: 11/10/2009	: TERM ADJUSTMENT IN VIEW
Appliction No	: 10/813,695	: OF WYETH AND NOTICE OF INTENT TO
Filed	: 03/29/2004	: ISSUE CERTIFICATE OF CORRECTION
		:

The Request for Recalculation is **GRANTED** to the extent indicated.

The patent term adjustment has been determined to be **1043** days. The USPTO will *sua sponte* issue a certificate of correction reflecting the amount of PTA days determined by the recalculation.

Prior to the issuance of the certificate of correction, the USPTO will afford patentee an opportunity to be heard and request reconsideration. Accordingly, patentee has **one month or thirty (30) days**, whichever is longer, to file a request for reconsideration of this patent term adjustment calculation. See 35 U.S.C. 154(b)(3)(B)(ii) and 37 CFR 1.322(a)(4). No extensions of time will be granted under 37 CFR 1.136.

Patentee should use document code PET.OP if electronically filing a request for reconsideration of this patent term adjustment calculation. The patentee must also include the information required by 37 CFR 1.705(b)(2) and the fee required by 37 CFR 1.18(e). If patentee does not file a timely request for reconsideration of this patent term adjustment calculation including the information required by 37 CFR 1.705(b)(2) and the fee required by 37 CFR 1.18(e), the USPTO will issue a certificate of correction reflecting the PTA determination noted above.

Patentee should be aware that in order to preserve the right to review in the United States District Court for the District of Columbia of the USPTO patent term adjustment determination, patentee must ensure that he or she also take the steps required under 35 U.S.C. 154(b)(4)(A) in a timely manner. Nothing in the request for recalculation should be construed as providing an alternative time frame for commencing a civil action under 35 U.S.C. 154(b)(4)(A).

Any questions concerning this decision should be directed to the Office of Patent Legal Administration at 571-272-7702.

3-25-08

UNITED STATES DEPARTMENT OF COMMERCE
Patent and Trademark Office
ASSISTANT SECRETARY OF COMMERCE AND
COMMISSIONER OF PATENTS AND TRADEMARKS
Washington, D.C. 20231

Patent No.: 7,288,672
Applicant : Chaudhari, et. al.
Issued : October 30, 2007
For : IMPROVED PROCESS FOR PREPARATION OF ESTERSOF HYDROXYTIGLIC ALDEHYDES

Re: Request for Certificate of Correction

Consideration has been given your request for the issuance of a certificate of correction for the above-identified patent under the provisions of Rules 1.322 and 1.323.

The alleged error on the title page, item [54] title, it is the practice to exclude words such as "Improvements in", "Improved", "New", "A", "Novel", etc., from the printed patent.

Therefore, your request in this matter is hereby denied. A certificate of correction will be issued to correct the remaining errors noted in your request.

Further correspondence concerning this matter should be filed and directed to Decisions and Certificates of Correction Branch.

For Mary Diggs
Decisions & Certificates
of Correction Branch
(703) 3089390 ext. 124 or 105

Serge iiin-Schneider
Morgan & Finnegan, LLP
3 Word Financial center
New York, NY 10281-2101

ej

UNITED STATES PATENT AND TRADEMARK OFFICE

COMMISSIONER FOR PATENTS
UNITED STATES PATENT AND TRADEMARK OFFICE
P.O. BOX 1450
ALEXANDRIA, VA 22313-1450
www.uspto.gov

SIERRA PATENT GROUP, LTD.
P O BOX 6149
STATELINE, NV 89449

COPY MAILED
NOV 1 0 2004
OFFICE OF PETITIONS

In re Application of :
Wesinger, et al. :
Application No. 10/813,703 : NOTICE
Filed: March 30, 2004 :
Attorney Docket No. NES-014COB :

This is a notice regarding your request for acceptance of a fee deficiency submission under 37 CFR 1.28(c), filed October 22, 2004.

As set forth at 37 CFR 1.28(c), the deficiency is based on the amount of the fee, for other than a small entity, in effect at the time the deficiency is paid in full." Accordingly, the fee deficiency submission under 37 CFR 1.28 is hereby **accepted.**

The change of status to a large entity has been entered and made of record.

This file is being forwarded to the Office of Initial Patent Examination for further processing.

Telephone inquiries regarding this decision should be directed to the undersigned at (703) 305-0310.

Alesia M. Brown
Senior Petitions Attorney
Office of Petitions

UNITED STATES PATENT AND TRADEMARK OFFICE

Commissioner for Patents
United States Patent and Trademark Office
P.O. Box 1450
Alexandria, VA 22313-1450
www.uspto.gov

JUL 22 2005

SIERRA PATENT GROUP, LTD.
P.O. BOX 6149
STATELINE, NV 89449

In re application of Ralph E. Wesinger Jr. et al. Application No. 10/813,703 Filed: March 30, 2004 For: AUTOMATED ON-LINE INFORMATION SERVICE AND DIRECTORY, PARTICULARLY FOR THE WORLD WIDE WEB	: : : :	**DECISION ON PETITION TO MAKE SPECIAL (INFRINGEMENT)**

This is a decision on the petition under 37 C.F.R § 1.102(d) filed March 30, 2004 to make the above-identified application special.

The petition requests that the above-identified application be made special under the procedure set forth in M.P.E.P. § 708.02, item II: Infringement.

MPEP 708.02 states that a Petition to Make Special based on Infringement must have the following: (1) the appropriate petition fee under 37 CFR 1.17(i); (2) a statement by the assignee, applicant, or attorney alleging: (A) that there is an infringing device or product actually on the market or method in use; (B) that a rigid comparison of the alleged infringing device, product or method with the claims of the application has been made, and that, in his or her opinion, some of the claims are unquestionably infringed; and (C) that he or she has made a careful and thorough search of the prior art, or has good knowledge of the prior art, and has sent a copy of the references deemed most closely related to the subject matter encompassed by the claims.

The petition filed March 30, 2004 meets all of the requirements above and, therefore, the petition is **GRANTED**.

With regards to element 2(C) above, an Information Disclosure Statement was filed on February 16, 2005.

The examiner is directed (1) to make an interference search for possible interfering applications; (2) to promptly examine this application out of turn; and (3) if any interfering application is discovered, to examine such application

simultaneously and state in the first official letter of such application that it is being taken out of turn because of a possible interference.

Petitioner is advised that this application will continue to be special, throughout its entire prosecution and pendency, including interference and appeal, if any, only if petitioner makes a prompt *bona fide* effort, in response to each Office action, to place the application in condition for allowance, even if it is necessary to conduct an interview with the examiner to accomplish this purpose.

Kenneth J. Dorner
Special Programs Examiner
Technology Center 3600
(571) 272-6587

KJD/slb: 07/19/05

UNITED STATES PATENT AND TRADEMARK OFFICE

COMMISSIONER FOR PATENTS
UNITED STATES PATENT AND TRADEMARK OFFICE
P.O. BOX 1450
ALEXANDRIA, VA 22313-1450
www.uspto.gov

Paper No.

DYKEMA GOSSETT PLLC
Suite 300
39577 Woodward Avenue
Bloomfield Hills MI 48304

COPY MAILED

JAN 25 2007

OFFICE OF PETITIONS

In re Application of	:	
Ziech et al.	:	DECISION ON APPLICATION
Application No. 10/813,713	:	FOR
Filed: March 31, 2004	:	PATENT TERM ADJUSTMENT
Atty Docket No. 60680-636	:	

This is a decision on the "APPLICATION FOR PATENT TERM ADJUSTMENT," filed December 26, 2006. Applicants request that the initial determination of patent term adjustment under 35 U.S.C. 154(b) be corrected from two hundred seventy (270) days to three hundred (300) days.

The application for patent term adjustment is **GRANTED**.

The Office has updated the PAIR screen to reflect that the correct Patent Term Adjustment (PTA) determination at the time of the mailing of the notice of allowance is three hundred **(300)** days. A copy of the updated PAIR screen, showing the correct determination, is enclosed.

On September 26, 2006, the Office mailed the Determination of Patent Term Adjustment under 35 U.S.C. 154(b) in the above-identified application. The Notice stated that the patent term adjustment (PTA) to date is 270 days. On December 26, 2006, applicants timely submitted the instant application for patent term adjustment[1]. Applicants state that their response to the restriction requirement mailed March 31, 2006 was filed on May 1, 2006, not April 1, 2006. Accordingly, the reduction pursuant to 37 CFR 1.704(c)(8) for the filing of an Information Disclosure Statement (IDS) on May 5, 2006, should have been 4 days, not 34 days.

---

[1] PALM records indicate that the Issue Payment was filed on December 26, 2006.

Applicants state that the application is not subject to a terminal disclaimer.

Applicants are correct. The application history confirms that the election was filed electronically on May 1, 2006. This was still within three months of the mailing of the restriction requirement on March 31, 2006. The IDS was subsequently filed on May 5, 2006. Accordingly, the period of reduction pursuant to 37 CFR 1.704(c)(8) is 4 days.

In view thereof, the correct determination of patent term adjustment at the time of the mailing of the notice of allowance is 300 days.

Receipt of the $200.00 fee set forth in 37 CFR 1.18(e) is acknowledged. No additional fees are required.

The application is being forwarded to the Office of Patent Publication for issuance of the patent. The patent term adjustment indicated on the patent will include any additional patent term adjustment accrued for Office delay in issuing the patent after payment of the issue fee and all outstanding requirements having been met.

Telephone inquiries specific to this matter should be directed to the undersigned at (571) 272-3219.

Nancy Johnson
Senior Petitions Attorney
Office of Petitions

Enclosure: Copy of REVISED PAIR Screen

Day : Tuesday
Date: 1/23/2007

PALM INTRANET

Time: 14:11:04

PTA Calculations for Application: 10/813713			
Application Filing Date:	03/31/2004	PTO Delay (PTO):	304
Issue Date of Patent:		Three Years:	0
Pre-Issue Petitions:	0	Applicant Delay (APPL):	34
Post-Issue Petitions:	0	Total PTA (days):	300
PTO Delay Adjustment:	30		

File Contents History

Number	Date	Contents Description	PTO	APPL	START
60	01/23/2007	ADJUSTMENT OF PTA CALCULATION BY PTO		4	
59	01/23/2007	ADJUSTMENT OF PTA CALCULATION BY PTO	34		
47	09/26/2006	MAIL NOTICE OF ALLOWANCE			
46	09/25/2006	ISSUE REVISION COMPLETED			
45	09/22/2006	NOTICE OF ALLOWANCE DATA VERIFICATION COMPLETED			
44	09/22/2006	CASE DOCKETED TO EXAMINER IN GAU			
43	09/18/2006	EXAMINER INTERVIEW SUMMARY RECORD (PTOL - 413)			
42	09/22/2006	NOTICE OF ALLOWABILITY			
41	09/18/2006	NEW OR ADDITIONAL DRAWING FILED			
40	09/19/2006	DATE FORWARDED TO EXAMINER			
39	08/18/2006	RESPONSE AFTER NON-FINAL ACTION			
38	06/16/2006	MAIL NON-FINAL REJECTION			
37	06/12/2006	NON-FINAL REJECTION			
36	05/05/2006	INFORMATION DISCLOSURE STATEMENT CONSIDERED			
35	05/01/2006	INFORMATION DISCLOSURE STATEMENT CONSIDERED			
34	02/13/2006	INFORMATION DISCLOSURE STATEMENT CONSIDERED			
33	05/05/2006	INFORMATION DISCLOSURE STATEMENT (IDS) FILED		34	29
32	05/01/2006	REFERENCE CAPTURE ON IDS			
31	05/01/2006	INFORMATION DISCLOSURE STATEMENT (IDS) FILED			
30	05/02/2006	DATE FORWARDED TO EXAMINER			
29	04/01/2006	RESPONSE TO ELECTION / RESTRICTION FILED			

28	03/31/2006	MAIL RESTRICTION REQUIREMENT	304		-1
27	03/29/2006	REQUIREMENT FOR RESTRICTION / ELECTION			
26	02/13/2006	INFORMATION DISCLOSURE STATEMENT (IDS) FILED			
25	02/17/2006	CASE DOCKETED TO EXAMINER IN GAU			
24	03/10/2005	IFW TSS PROCESSING BY TECH CENTER COMPLETE			
23	03/10/2005	CASE DOCKETED TO EXAMINER IN GAU			
22	07/06/2004	INCOMING LETTER PERTAINING TO THE DRAWINGS			
21	07/06/2004	PRELIMINARY AMENDMENT			
20	03/31/2004	REFERENCE CAPTURE ON IDS			
19	03/31/2004	INFORMATION DISCLOSURE STATEMENT (IDS) FILED			
18	02/09/2005	RESCIND NONPUBLICATION REQUEST FOR PRE GRANT PUBLICATION			
17	08/02/2004	APPLICATION RETURN FROM OIPE			
16	08/02/2004	APPLICATION IS NOW COMPLETE			
15	08/02/2004	APPLICATION RETURN TO OIPE			
14	07/30/2004	APPLICATION RETURN FROM OIPE			
13	07/30/2004	APPLICATION IS NOW COMPLETE			
12	07/06/2004	ADDITIONAL APPLICATION FILING FEES			
11	07/06/2004	APPLICANT HAS SUBMITTED NEW DRAWINGS TO CORRECT CORRECTED PAPERS PROBLEMS			
10	06/18/2004	CORRECTED PAPER			
9	06/18/2004	PRE-EXAM OFFICE ACTION WITHDRAWN			
8	06/17/2004	APPLICATION RETURN TO OIPE			
7	06/17/2004	APPLICATION DISPATCHED FROM OIPE			
6	06/18/2004	APPLICATION IS NOW COMPLETE			
5	03/31/2004	PGPUBS NONPUB REQUEST			
4	04/28/2004	CLEARED BY OIPE CSR			
3	04/28/2004	CASE CLASSIFIED BY L&R			
2	04/20/2004	IFW SCAN & PACR AUTO SECURITY REVIEW			
1	03/31/2004	INITIAL EXAM TEAM NN			

Search Another: Application# Search

EXPLANATION OF PTA CALCULATION

EXPLANATION OF PTE CALCULATION

SPE RESPONSE FOR CERTIFICATE OF CORRECTION

Paper No.: _____

DATE : 04/29/06

TO SPE OF : ART UNIT 1616

SUBJECT : Request for Certificate of Correction for Appl. No.: 10/813721 Patent No.: 7022312

Please respond to this request for a certificate of correction within 7 days.

Please review the requested changes/corrections as shown in the **COCIN** document(s) in the IFW application image. No new matter should be introduced, nor should the scope or meaning of the claims be changed.

Please complete the response (see below) and forward the completed response to scanning using document code **COCX**.

Certificates of Correction Branch

703-308-9390 ext. 183

Thank You For Your Assistance

The request for issuing the above-identified correction(s) is hereby:

Note your decision on the appropriate box.

- ☑ **Approved** — All changes apply.
- ☐ **Approved in Part** — Specify below which changes **do not** apply.
- ☐ **Denied** — State the reasons for denial below.

Comments: _____

JOHANN RICHTER
SUPERVISORY PATENT EXAMINER
GROUP 1616
SPE

1616
Art Unit

OIPE IAP41
APR 20 2006
PATENT & TRADEMARK OFFICE

10/813721

Attorney Docket No. 00027.05CON

IN THE UNITED STATES PATENT AND TRADEMARK OFFICE

In re application of: Joshua D. Rabinowitz, et al.	)	
Patent No.: 7,022,312	)	Examiner: M. Haghighatian
Issue Date: April 4, 2006	)	Group Art Unit: 1616
For: DELIVERY OF ANTIEMETICS THROUGH AN INHALATION ROUTE	)	

Certificate
APR 24 2006
of Correction

Attn: Certificate of Correction Branch
Commissioner for Patents
P.O. Box 1450
Alexandria, VA 22313-1450

REQUEST FOR CERTIFICATE OF CORRECTION OF PATENT FOR PTO MISTAKE (37 CFR 1.322(a))

1. Attached is Form PTO/SB/44, which is suitable for printing.

2. The exact location where the error occurred is in the Claims, column 14, line 55, as follows:

Claim 9 reads:

> 9. The condensation aerosol according to Claim 8, wherein the condensation aerosol is characterized by an MMAD of 0.2 to 3 microns.

Claim 9 should read:

> 9. The condensation aerosol according to Claim 1, wherein the condensation aerosol is characterized by an MMAD of about 0.2 to about 3 microns.

Johann, these changes were in the examiner Amdt. They are ok. Thanks

3. These changes were submitted in an Amendment Under 37 C.F.R. § 1.312(a) filed on January 18, 2006. A copy of this Amendment together with a copy of the date-stamped postcard receipt is enclosed. The minor errors, described above, were incurred through the fault of the Office and therefore no fee is believed due.

---

37 CFR 1.8
CERTIFICATE OF MAILING
I hereby certify that this correspondence is being deposited with the United States Postal Service as first class mail in an envelope addressed to: Assistant Commissioner for Patents, Washington, D.C. 20231 on April 17, 2006.

Signature: Veronica Doucet
Name: Veronica Doucet

APR 24 2006

UNITED STATES PATENT AND TRADEMARK OFFICE

Commissioner for Patents
United States Patent and Trademark Office
P.O. Box 1450
Alexandria, VA 22313-1450
www.uspto.gov

SCENERA RESEARCH, LLC
111 CORNING ROAD
SUITE 220
CARY, NC 27518

MAILED

JUN 11 2009

OFFICE OF PETITIONS

ON PETITION

In re Application of :
Robert P. Morris :
Application No. 10/813,723 :
Filed: March 31, 2004 :
Attorney Docket No. I222/US

This is a decision on the petition, filed June 10, 2009 under 37 CFR 1.313(c)(2) to withdraw the above-identified application from issue after payment of the issue fee.

The petition is **GRANTED**.

The above-identified application is withdrawn from issue for consideration of a submission under 37 CFR 1.114 (request for continued examination). See 37 CFR 1.313(c)(2).

Petitioner is advised that the issue fee paid on May 8, 2009 in the above-identified application cannot be refunded. If, however, the above-identified application is again allowed, petitioner may request that it be applied towards the issue fee required by the new Notice of Allowance.[1]

Telephone inquiries should be directed to Irvin Dingle at (571) 272-3210.

This matter is being referred to Technology Center AU 2622 for processing of the request for continued examination under 37 CFR 1.114 and for consideration of the concurrently filed Information Disclosure Statement.

/Irvin Dingle/
Irvin Dingle
Petitions Examiner
Office of Petitions

---

[1] The request to apply the issue fee to the new Notice may be satisfied by completing and returning the new Issue Fee Transmittal Form PTOL-85(b), which includes the following language thereon: Commissioner for Patents is requested to apply the Issue Fee and Publication Fee (if any) or re-apply any previously paid issue fee to the application identified above. Petitioner is advised that, whether a fee is indicated as being due or not, the Issue Fee Transmittal Form **must** be completed and timely submitted to avoid abandonment. Note the language in bold text on the first page of the Notice of Allowance and Fee(s) Due (PTOL-85).

UNITED STATES PATENT AND TRADEMARK OFFICE

Commissioner for Patents
United States Patent and Trademark Office
P.O. Box 1450
Alexandria, VA 22313-1450
www.uspto.gov

FORD GLOBAL TECHNOLOGIES, LLC.
FAIRLANE PLAZA SOUTH, SUITE 800
330 TOWN CENTER DRIVE
DEARBORN, MI 48126

COPY MAILED
APR 19 2006
OFFICE OF PETITIONS

In re Application of Lawrence Stopezynski Application No. 10/813,726 Filed: March 31, 2004 Attorney Docket No. 81044221	: : : : :	ON PETITION

This is a decision on the petition under 37 CFR 1.137(b), filed June 13, 2005, to revive the above-identified application.

The petition is **GRANTED**.

The application became abandoned for failure to timely respond to a Notice to File Corrected Application Papers mailed June 30, 2004. The notice required replacement drawings in compliance with 37 CFR 1.84 and 37 CFR 1.121; replacement claims commencing on a separate sheet in compliance with 37 CFR 1.75(h) and 1.121; and a replacement abstract commencing on a separate sheet in compliance with 37 CFR 1.72(b) and 37 CFR 1.121. A Notice of Abandonment was mailed March 14, 2005. In response, on June 13, 2005, the present petition was filed, along with replacement drawings, claims and the abstract.

The application is being referred to the Office of Initial Patent Examination (OIPE) for review of the papers filed June 13, 2005.

Telephone inquires related to this decision should be directed to the undersigned at (571) 272-3204. Telephone inquiries related to OIPE processing should be directed to their hotline at (571) 272-4000.

Sherry D. Brinkley
Petitions Examiner
Office of Petitions

UNITED STATES PATENT AND TRADEMARK OFFICE

COMMISSIONER OF PATENTS

June 22, 2005

G. Peter Albert
Foley & Lardner
321 North Clark St.
Suite 2800
Chicago, Il 60610-4764

In re Application of:
Stirbu, et al
Serial No: 10/813,727 On Petition
Filing Date: March 30, 2004
For: **DISTINGUISHING BETWEEN DEVICES OF DIFFERENT TYPES IN A WIRELESS LOCAL AREA NETWORK (WLAN)**

In response to the petitions received on January 12, 2004, to withdraw the holding of abandonment in the above application.

The petition is Granted.

The above-identified application became abandoned for failure to reply with the meaning of 37 C.D.R 1.113 in a timely manner to the Notice to File Missing Parts of Nonprovisional Application mailed June 16, 2004. Which set forth a shortened statutory period for reply of two months. Accordingly, the above-identified application became abandoned August 17, 2004. The notice of abandonment was mailed on March 14, 2005.

The evidence submitted is sufficient to establish that the petitioners responded to the Notice to File Missing Part of Nonprovisional Application on August 12, 2004.

The office regrets any inconvenience this may have caused the client.

Telephone inquiries concerning this application may be directed to Doshie E. Day (703) 308-3640.

Doshie E. Day
Program Management Assistant
Office of Initial Patent Examination

UNITED STATES PATENT AND TRADEMARK OFFICE

UNITED STATES DEPARTMENT OF COMMERCE
United States Patent and Trademark Office
Address: COMMISSIONER FOR PATENTS
P.O. Box 1450
Alexandria, Virginia 22313-1450
www.uspto.gov

APPLICATION NO.	FILING DATE	FIRST NAMED INVENTOR	ATTORNEY DOCKET NO.	CONFIRMATION NO.
10/813,739	03/31/2004	Norbert Machanek	022233-9052-00	5140

23409 7590 02/24/2010
MICHAEL BEST & FRIEDRICH LLP
100 E WISCONSIN AVENUE
Suite 3300
MILWAUKEE, WI 53202

EXAMINER
CIRIC, LJILJANA V

ART UNIT	PAPER NUMBER
3744	

MAIL DATE	DELIVERY MODE
02/24/2010	PAPER

Please find below and/or attached an Office communication concerning this application or proceeding.

The time period for reply, if any, is set in the attached communication.

UNITED STATES PATENT AND TRADEMARK OFFICE

Commissioner for Patents
United States Patent and Trademark Office
P.O. Box 1450
Alexandria, VA 22313-1450
www.uspto.gov

MICHAEL BEST & FRIEDRICH LLP
100 E WISCONSIN AVENUE
Suite 3300
MILWAUKEE WI 53202

In re Application of: MACHANEK, NORBERT Serial No.: 10/813,739 Filed: March 31, 2004 Docket No. 022233-9052-00 Title: HEAT EXCHANGER BLOCK	DECISION TO ACCEPT DUPLICATE PAPER UNDER 37 C.F.R. 1.181

This is a decision on the communication filed on February 25, 2009. The petitioner requests withdrawal of the holding of abandonment and accept a duplicate response pursuant to 37 CFR 1.181(a).

The request is GRANTED.

The present application was held abandoned for failure to timely respond to the non-final Office action mailed on July 31, 2006 which set a one-month shortened period for reply. Notice of abandonment was mailed on February 12, 2007.

Applicant asserts that a timely response to the non-final office action was mailed to the Office on August 24, 2006. The applicant has supplied a copy of a Response to Official Action indicating a mailing date of August 24, 2006. The applicant has also provided a Certificate of Mailing pursuant to 37 CFR 1.8, dated August 24, 2006. Finally, the applicant has provided a copy of USPTO receipt stamp dated August 28, 2006 at 4:40PM as an acknowledgement of receipt.

As applicant has provided convincing evidence that a timely reply to the non-final Office action of July 31, 2006 was mailed to the Office on August 24, 2006, there is no abandonment in fact. Any inconvenience or delay caused to applicant is regretted.

In view of the above, the abandonment of the application is in error and is hereby rescinded. This application is being forwarded to the examiner in Art Unit 3744 for appropriate action.

PETITION GRANTED

Robert Olszewski, Director
Technology Center 3700

UNITED STATES PATENT AND TRADEMARK OFFICE

Commissioner for Patents
United States Patent and Trademark Office
P.O. Box 1450
Alexandria, VA 22313-1450
www.uspto.gov

DON B. FINKELSTEIN, ESQ.
SUITE 216
3858 CARSON STREET
TORRANCE CA 90503

COPY MAILED

MAY 1 3 2008

OFFICE OF PETITIONS

In re Application of :
Hector Cordnado :
Application No. 10/813,744 : DECISION ON PETITION
Filed: April 1, 2004 :
Attorney Docket No. PA5346 :

This is a decision on the petition, filed February 28, 2008, which is being treated as a petition under 37 CFR 1.8(b), requesting withdrawal of the holding of abandonment in the above-identified application.

The petition is **GRANTED**.

This application was held abandoned for failure to timely respond to the Office action of July 20, 2007, which set a three (3) month shortened statutory period for reply. Accordingly, a reply was due on or before October 20, 2007.

Petitioner states that a timely reply was mailed via certificate of mailing on January 17, 2008, which included the following papers: amendment, check in the amount of $550.00 to obtain a three month extension of time and a postcard. Petitioner has submitted a copy of the previously mailed correspondence, which bears a certificate of mailing dated January 17, 2008, which would have rendered the reply timely if received.

The file record does not include the originally submitted papers. Failure to receive correspondence which includes a certificate of mailing or certificate of facsimile transmission is addressed in 37 CFR 1.8(b), reproduced below:

> In the event that correspondence is considered timely filed by being mailed or transmitted in accordance with paragraph (a) of this section, but not received in the U.S. Patent and Trademark Office after a reasonable amount of time has elapsed from the time of mailing or transmitting of the correspondence, or after the application is held to be abandoned, or after the proceeding is dismissed, terminated, or decided with prejudice, the correspondence will be considered timely if the party who forwarded such correspondence:

(1) Informs the Office of the previous mailing or transmission of the correspondence promptly after becoming aware that the Office has no evidence of receipt of the correspondence;

(2) Supplies an additional copy of the previously mailed or transmitted correspondence and certificate; and

(3) Includes a statement which attests on a personal knowledge basis or to the satisfaction of the Director to the previous timely mailing or transmission. If the correspondence was sent by facsimile transmission, a copy of the sending unit's report confirming transmission may be used to support this statement.

The petition satisfies the above requirements of 37 CFR 1.8(b). Accordingly, the holding of abandonment for failure to timely file a reply to the Office action of July 20, 2007 is hereby withdrawn and the application restored to pending status.

The copy of the reply received with the petition will be accepted in place of the reply shown to have been mailed (or transmitted by facsimile) on January 17, 2008.

This application is being referred to Technology Center AU 3635 for appropriate action in the normal course of business on the reply received with petition.

Charlema Grant
Petitions Attorney
Office of Petitions

UNITED STATES PATENT AND TRADEMARK OFFICE

Commissioner for Patents
United States Patent and Trademark Office
P.O. Box 1450
Alexandria, VA 22313-1450
www.uspto.gov

In re Application of
Hector Coronado

Application No. 10813744

Filed: April 1,2004

Attorney Docket No. PA5346

:DECISION ON PETITION TO MAKE SPECIAL
:UNDER 37 CFR 1.102(c)(1)

This is a decision on the electronic petition under 37 CFR 1.102 (c)(1), filed 20-MAY-2009 to make the above-identified application special based on applicant's age as set forth in MPEP § 708.02, Section IV.

The petition is **GRANTED**.

A grantable petition to make an application special under 37 CFR 1.102(c)(1), MPEP § 708.02, Section IV: Applicant's Age must include a statement by applicant or a registered practitioner having evidence that applicant is at least 65 years of age. No fee is required.

Accordingly, the above-identified application has been accorded "special" status and will be taken up for action by the examiner upon the completion of all pre-examination processing.

Telephone inquiries concerning this electronic decision should be directed to the Electronic Business Center at 866-217-9197.

All other inquiries concerning either the examination or status of the application should be directed to the Technology Center.

UNITED STATES PATENT AND TRADEMARK OFFICE

UNITED STATES DEPARTMENT OF COMMERCE
United States Patent and Trademark Office
Address: COMMISSIONER FOR PATENTS
P.O. Box 1450
Alexandria, Virginia 22313-1450
www.uspto.gov

HAHN LOESER / LINCOLN
ONE GOJO PLAZA
SUITE 300
AKRON, OH 44311-1076

Mail Date: 06/29/2010

Applicant	: George D. Blankenship	: DECISION ON REQUEST FOR
Patent Number	: 7737382	: RECALCULATION of PATENT
Issue Date	: 06/15/2010	: TERM ADJUSTMENT IN VIEW
Application No	: 10/813,746	: OF WYETH
Filed	: 04/01/2004	:
		:

The Patentee's Request for Recalculation is **DISMISSED.**

This Request is deemed ineligible for consideration for one or more of the following reasons:

(A). The patent for which PTA recalculation is requested is either a design or reissue application or is a reexamination proceeding;

(B). The patent for which PTA recalculation is requested resulted from a utility or plant application filed under 35 USC 111(a) before May 29, 2000 and no CPA filed in the application on/after May 29, 2000;

(C). The patent for which PTA recalculation is requested resulted from an international application in which the international filing date was before May 29, 2000 and no CPA filed in the application on/after May 29, 2000;

(D). The patent for which PTA recalculation is requested issued on/after March 2, 2010;

(E). The Request for Recalculation was filed more than 180 days after the grant date of the patent and the request was not filed within two months of a dismissal of a request for reconsideration of the of the patent term under 37 CFR 1.705(d);

(F). The Request for Recalculation is not solely limited to USPTO pre-Wyeth interpretation of 35 U.S.C. 154(b)(2)(A);

or

(G). A civil action was filed pursuant to 35 U.S.C. 154(b)(4)(A)concerning the same patent at issue in this request.

Patentee may file a reply to this decision dismissing the Request for Recalculation. Patentee must file such reply within one month or thirty days, whichever is longer, of the mail date of the decision dismissing the Request for Recalculation. No fee is required if patentee is asserting in the reply that the dismissal for ineligibility is improper.

Patentee should use document code PET.OP if electronically filing a reply to this dismissal. If the USPTO finds that the request was improperly deemed ineligible, the USPTO will mail applicant a recalculation determination.

Patentee should be aware that in order to preserve the right to review in the United States District Court for the District of Columbia of the USPTO patent term adjustment determination, patentee must ensure that he or she also take the steps required under 35 U.S.C. 154(b)(4)(A). Nothing in the request for recalculation should be construed as providing an alternative time frame for commencing a civil action under 35 U.S.C. 154 (b)(4)(A).

Any questions concerning this decision should be directed to the Office of Patent Legal Administration at 571-272-7702.

UNITED STATES PATENT AND TRADEMARK OFFICE

Commissioner for Patents
United States Patent and Trademark Office
P.O. Box 1450
Alexandria, VA 22313-1450
www.uspto.gov

KATTEN MUCHIN ROSENMAN LLP
575 MADISON AVENUE
NEW YORK, NY 10022-2585

COPY MAILED
FEB 05 2007
OFFICE OF PETITIONS

In re Application of	:	
Giovanni Mazzarolo	:	
Application No. 10/813,751	:	DECISION ON PETITION
Filed: March 26, 2004	:	
Attorney Docket No. SAIC 21.001	:	

This is a decision on the petition under 37 CFR 1.182, filed, July 19, 2006, to correct the spelling of the name of inventor "Gabriele Mazzarolo" to Giovanni Mazzarolo.

The petition is **GRANTED**.

Office records have been corrected to reflect the correct spelling of the above-named inventor. A corrected Filing Receipt, which sets forth the correct spelling of the above-named inventor, accompanies this decision on petition.

As authorized, the $400 fee for the petition under 37 CFR 1.182, and the $100 certificate of correction fee have been assessed to petitioner's deposit account.

Any questions concerning this matter may be directed to Irvin Dingle at (571) 272-3210.

This matter is being referred to the Certificates of Correction Branch for issuance of the requested Certificate of Correction.

Irvin Dingle
Petition Examiner
Office of Petitions

ATTACHMENT: Corrected Filing Receipt

UNITED STATES PATENT AND TRADEMARK OFFICE

UNITED STATES DEPARTMENT OF COMMERCE
United States Patent and Trademark Office
Address: COMMISSIONER FOR PATENTS
P.O. Box 1450
Alexandria, Virginia 22313-1450
www.uspto.gov

APPL NO.	FILING OR 371 (c) DATE	ART UNIT	FIL FEE REC'D	ATTY.DOCKET NO	DRAWINGS	TOT CLMS	IND CLMS
10/813,751	03/26/2004	3765	1070	SAIC 21.001	2	6	1

CONFIRMATION NO. 4506
CORRECTED FILING RECEIPT
OC000000022311163
OC000000022311163

26304
KATTEN MUCHIN ROSENMAN LLP
575 MADISON AVENUE
NEW YORK, NY 10022-2585

Date Mailed: 02/02/2007

Receipt is acknowledged of this regular Patent Application. It will be considered in its order and you will be notified as to the results of the examination. Be sure to provide the U.S. APPLICATION NUMBER, FILING DATE, NAME OF APPLICANT, and TITLE OF INVENTION when inquiring about this application. Fees transmitted by check or draft are subject to collection. Please verify the accuracy of the data presented on this receipt. **If an error is noted on this Filing Receipt, please mail to the Commissioner for Patents P.O. Box 1450 Alexandria Va 22313-1450. Please provide a copy of this Filing Receipt with the changes noted thereon. If you received a "Notice to File Missing Parts" for this application, please submit any corrections to this Filing Receipt with your reply to the Notice. When the USPTO processes the reply to the Notice, the USPTO will generate another Filing Receipt incorporating the requested corrections (if appropriate).**

Applicant(s)

Giovanni Mazzarolo, Coste Di Maser (Treviso), ITALY;

Power of Attorney:

Aaron Karas--18923
Samson Helfgott--23072
Serle Mosoff--25900
Emma Shleifer--29734
Michael Markowitz--30659
Shahan Islam--32507
Harris Wolin--39432
Linda Chan--42400
Thomas Bean--44528
Brian Myers--46947

Domestic Priority data as claimed by applicant

This application is a CON of PCT/EP02/09829 09/03/2002

Foreign Applications

ITALY TV2001U000051 10/02/2001

If Required, Foreign Filing License Granted: 06/16/2004

The country code and number of your priority application, to be used for filing abroad under the Paris Convention, is US10/813,751

Projected Publication Date: Not Applicable

Non-Publication Request: No

Early Publication Request: No

Title

KNEE-PAD APPLICABLE TO A SPORTS GARMENT

Preliminary Class

002

PROTECTING YOUR INVENTION OUTSIDE THE UNITED STATES

Since the rights granted by a U.S. patent extend only throughout the territory of the United States and have no effect in a foreign country, an inventor who wishes patent protection in another country must apply for a patent in a specific country or in regional patent offices. Applicants may wish to consider the filing of an international application under the Patent Cooperation Treaty (PCT). An international (PCT) application generally has the same effect as a regular national patent application in each PCT-member country. The PCT process **simplifies** the filing of patent applications on the same invention in member countries, but **does not result** in a grant of "an international patent" and does not eliminate the need of applicants to file additional documents and fees in countries where patent protection is desired.

Almost every country has its own patent law, and a person desiring a patent in a particular country must make an application for patent in that country in accordance with its particular laws. Since the laws of many countries differ in various respects from the patent law of the United States, applicants are advised to seek guidance from specific foreign countries to ensure that patent rights are not lost prematurely.

Applicants also are advised that in the case of inventions made in the United States, the Director of the USPTO must issue a license before applicants can apply for a patent in a foreign country. The filing of a U.S. patent application serves as a request for a foreign filing license. The application's filing receipt contains further information and guidance as to the status of applicant's license for foreign filing.

Applicants may wish to consult the USPTO booklet, "General Information Concerning Patents" (specifically, the section entitled "Treaties and Foreign Patents") for more information on timeframes and deadlines for filing foreign patent applications. The guide is available either by contacting the USPTO Contact Center at 800-786-9199, or it can be viewed on the USPTO website at http://www.uspto.gov/web/offices/pac/doc/general/index.html.

For information on preventing theft of your intellectual property (patents, trademarks and copyrights), you may wish to consult the U.S. Government website, http://www.stopfakes.gov. Part of a Department of Commerce initiative, this website includes self-help "toolkits" giving innovators guidance on how to protect intellectual property in specific countries such as China, Korea and Mexico. For questions regarding patent enforcement issues, applicants may call the U.S. Government hotline at 1-866-999-HALT (1-866-999-4158).

LICENSE FOR FOREIGN FILING UNDER
Title 35, United States Code, Section 184
Title 37, Code of Federal Regulations, 5.11 & 5.15

GRANTED

The applicant has been granted a license under 35 U.S.C. 184, if the phrase "IF REQUIRED, FOREIGN FILING LICENSE GRANTED" followed by a date appears on this form. Such licenses are issued in all applications where the conditions for issuance of a license have been met, regardless of whether or not a license may be required as set forth in 37 CFR 5.15. The scope and limitations of this license are set forth in 37 CFR 5.15(a) unless an earlier license has been issued under 37 CFR 5.15(b). The license is subject to revocation upon written notification. The

date indicated is the effective date of the license, unless an earlier license of similar scope has been granted under 37 CFR 5.13 or 5.14.

This license is to be retained by the licensee and may be used at any time on or after the effective date thereof unless it is revoked. This license is automatically transferred to any related applications(s) filed under 37 CFR 1.53(d). This license is not retroactive.

The grant of a license does not in any way lessen the responsibility of a licensee for the security of the subject matter as imposed by any Government contract or the provisions of existing laws relating to espionage and the national security or the export of technical data. Licensees should apprise themselves of current regulations especially with respect to certain countries, of other agencies, particularly the Office of Defense Trade Controls, Department of State (with respect to Arms, Munitions and Implements of War (22 CFR 121-128)); the Bureau of Industry and Security, Department of Commerce (15 CFR parts 730-774); the Office of Foreign Assets Control, Department of Treasury (31 CFR Parts 500+) and the Department of Energy.

NOT GRANTED

No license under 35 U.S.C. 184 has been granted at this time, if the phrase "IF REQUIRED, FOREIGN FILING LICENSE GRANTED" DOES NOT appear on this form. Applicant may still petition for a license under 37 CFR 5.12, if a license is desired before the expiration of 6 months from the filing date of the application. If 6 months has lapsed from the filing date of this application and the licensee has not received any indication of a secrecy order under 35 U.S.C. 181, the licensee may foreign file the application pursuant to 37 CFR 5.15(b).

UNITED STATES PATENT AND TRADEMARK OFFICE

UNITED STATES DEPARTMENT OF COMMERCE
United States Patent and Trademark Office
Address: COMMISSIONER FOR PATENTS
P.O. Box 1450
Alexandria, Virginia 22313-1450
www.uspto.gov

INTEL/BSTZ
BLAKELY SOKOLOFF TAYLOR & ZAFMAN LLP
1279 OAKMEAD PARKWAY
SUNNYVALE, CA 94085-4040

Mail Date: 06/02/2010

Applicant	: Bo Huang	: DECISION ON REQUEST FOR
Patent Number	: 7634767	: RECALCULATION of PATENT
Issue Date	: 12/15/2009	: TERM ADJUSTMENT IN VIEW
Application No	: 10/813,764	: OF WYETH AND NOTICE OF INTENT TO
Filed	: 03/31/2004	: ISSUE CERTIFICATE OF CORRECTION
		:

The Request for Recalculation is **GRANTED** to the extent indicated.

The patent term adjustment has been determined to be **914** days. The USPTO will *sua sponte* issue a certificate of correction reflecting the amount of PTA days determined by the recalculation.

Prior to the issuance of the certificate of correction, the USPTO will afford patentee an opportunity to be heard and request reconsideration. Accordingly, patentee has **one month or thirty (30) days**, whichever is longer, to file a request for reconsideration of this patent term adjustment calculation. See 35 U.S.C. 154(b)(3)(B)(ii) and 37 CFR 1.322(a)(4). No extensions of time will be granted under 37 CFR 1.136.

Patentee should use document code PET.OP if electronically filing a request for reconsideration of this patent term adjustment calculation. The patentee must also include the information required by 37 CFR 1.705(b)(2) and the fee required by 37 CFR 1.18(e). If patentee does not file a timely request for reconsideration of this patent term adjustment calculation including the information required by 37 CFR 1.705(b)(2) and the fee required by 37 CFR 1.18(e), the USPTO will issue a certificate of correction reflecting the PTA determination noted above.

Patentee should be aware that in order to preserve the right to review in the United States District Court for the District of Columbia of the USPTO patent term adjustment determination, patentee must ensure that he or she also take the steps required under 35 U.S.C. 154(b)(4)(A) in a timely manner. Nothing in the request for recalculation should be construed as providing an alternative time frame for commencing a civil action under 35 U.S.C. 154(b)(4)(A).

Any questions concerning this decision should be directed to the Office of Patent Legal Administration at 571-272-7702.

SPE RESPONSE FOR CERTIFICATE OF CORRECTION

Paper No.: _____

DATE : May 28, 2008

TO SPE OF : ART UNIT ~~2616~~ 2465

SUBJECT : Request for Certificate of Correction for Appl. No 10/813766 patent no7292573

Please respond to this request for a certificate of correction within 7 days.

Please review the requested changes/corrections as shown in the **COCIN** document(s) in the IFW application image. No new matter should be introduced, nor should the scope or meaning of the claims be changed.

Please complete the response (see below) and forward the completed response to scanning using document code **COCX**

Magdalene Talley

_____

Certificates of Correction Branch

703-308-9390 ext. 116

Thank You For Your Assistance

The request for issuing the above-identified correction(s) is hereby:

Note your decision on the appropriate box.

- ☑ **Approved** — **All** changes apply.
- ☐ **Approved in Part** — Specify below which changes **do not** apply.
- ☐ **Denied** — State the reasons for denial below.

Comments: _____

_____

_____

_____

_____

SPE — 2465 Art Unit

PTO/SB/44 (04-05)
Approved for use through 04/30/2007. OMB 0651-0033
U.S. Patent and Trademark Office; U.S. DEPARTMENT OF COMMERCE
Under the Paperwork Reduction Act of 1995, no persons are required to respond to a collection of information unless it displays a valid OMB control number.
(Also Form PTO-1050)

UNITED STATES PATENT AND TRADEMARK OFFICE
CERTIFICATE OF CORRECTION

PATENT NO : 7,292,573

APPLICATION NO. : 10/813,766

ISSUE DATE : Nov. 06, 2007

INVENTOR(S) : Bruce Edward LaVigne, et al.

It is certified that an error appears or errors appear in the above-identified patent and that said Letters Patent is hereby corrected as shown below:

On the face page, in drawing, under "ports 1004" delete "#10" and insert - - #7 - -, therefor.

On sheet 15 of 15, Fig. 10, under "ports 1004" delete "#10" and insert - - #7 - -, therefor.

MAILING ADDRESS OF SENDER (Please do not use customer number below):

This collection of information is required by 37 CFR 1.322, and 1.323, and 1.324. The information is required to obtain or retain a benefit by the public which is to file (and by the USPTO to process) an application. Confidentiality is governed by 35 U.S.C 122 and 37 CFR 1.14. This collection is estimated to take 1.0 hour to complete, including gathering, preparing, and submitting the completed application form to the USPTO. Time will vary depending upon the individual case. Any comments on the amount of time you require to complete this form and/or suggestions for reducing this burden, should be sent to the Chief Information Officer, U.S. Patent and Trademark Office, U.S. Department of Commerce, P.O. Box 1450, Alexandria, VA 22313-1450. DO NOT SEND FEES OR COMPLETED FORMS TO THIS ADDRESS. **SEND TO: Attention Certificate of Corrections Branch, Commissioner for Patent, P.O. Box 1450, Alexandria, VA 22313-1450.**

If you need assistance in completing the form, call 1-800-PTO-9199 and select option 2.

US007292573B2

(12) United States Patent
LaVigne et al.

(10) Patent No.: US 7,292,573 B2
(45) Date of Patent: Nov. 6, 2007

(54) METHODS AND APPARATUS FOR SELECTION OF MIRRORED TRAFFIC

(75) Inventors: **Bruce Edward LaVigne**, Roseville, CA (US); **Paul T. Congdon**, Granite Bay, CA (US); **Mark Gooch**, Roseville, CA (US)

(73) Assignee: **Hewlett-Packard Development Company, L.P.**, Houston, TX (US)

(*) Notice: Subject to any disclaimer, the term of this patent is extended or adjusted under 35 U.S.C. 154(b) by 828 days.

(21) Appl. No.: **10/813,766**

(22) Filed: **Mar. 31, 2004**

(65) **Prior Publication Data**

US 2005/0220092 A1 Oct. 6, 2005

(51) **Int. Cl.**
H04L 12/28 (2006.01)

(52) **U.S. Cl.** **370/390**; 370/468; 370/394; 370/401; 370/432

(58) **Field of Classification Search** ..... None
See application file for complete search history.

(56) **References Cited**

U.S. PATENT DOCUMENTS

5,802,320 A 9/1998 Baehr et al.
6,041,042 A 3/2000 Bussierre
6,618,818 B1 9/2003 Wahl et al.
6,707,817 B1 * 3/2004 Kadambi et al. 370/390
7,031,304 B1 * 4/2006 Arberg et al. 370/360
2004/0213232 A1 * 10/2004 Regan 370/390

* cited by examiner

Primary Examiner—Duc Ho

(57) **ABSTRACT**

One embodiment disclosed relates to a method for mirroring of select network traffic. A data packet is received by a network device. A determination is made as to whether a designated aspect of the packet matches a flagged entry in a look-up table on the network device. If a match is found, then copy of the packet is sent to an associated mirror destination. Another embodiment disclosed relates to a networking apparatus. The apparatus includes at least an operating system, a look-up table, and a mirroring engine. The operating system includes routines utilized to control the apparatus, and the look-up table includes selection information for mirror sources. The mirroring engine forwards copies of selected packets to a corresponding mirror destination. Another embodiment disclosed relates to a method of selecting packets to mirror that includes checking state information relating to the network traffic against dynamic mirroring criteria.

35 Claims, 15 Drawing Sheets

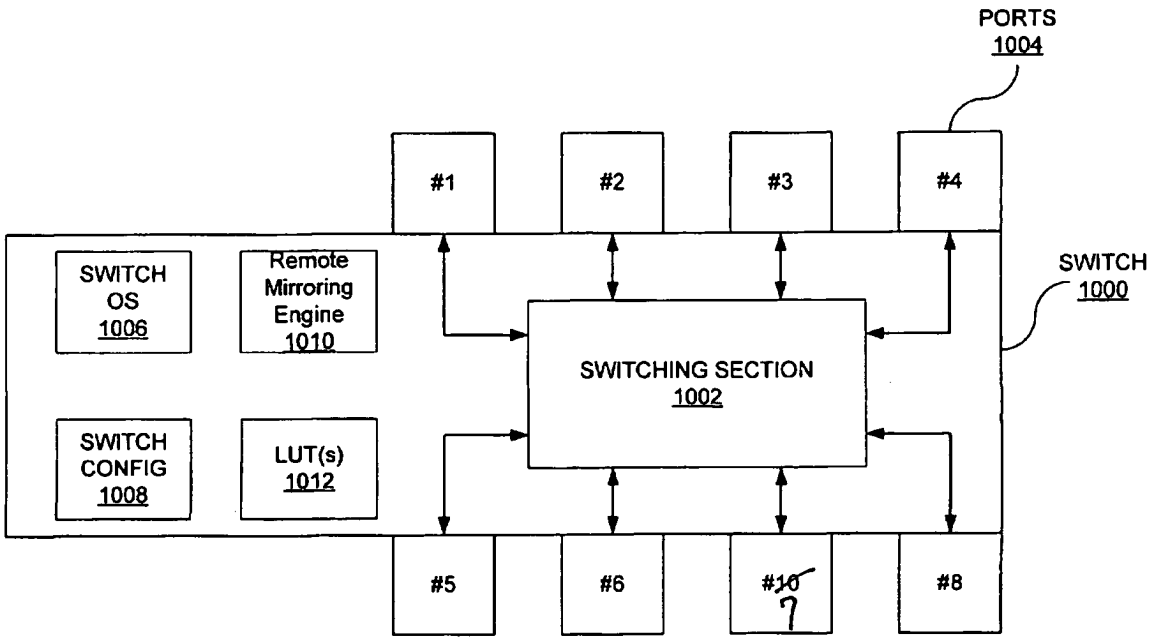

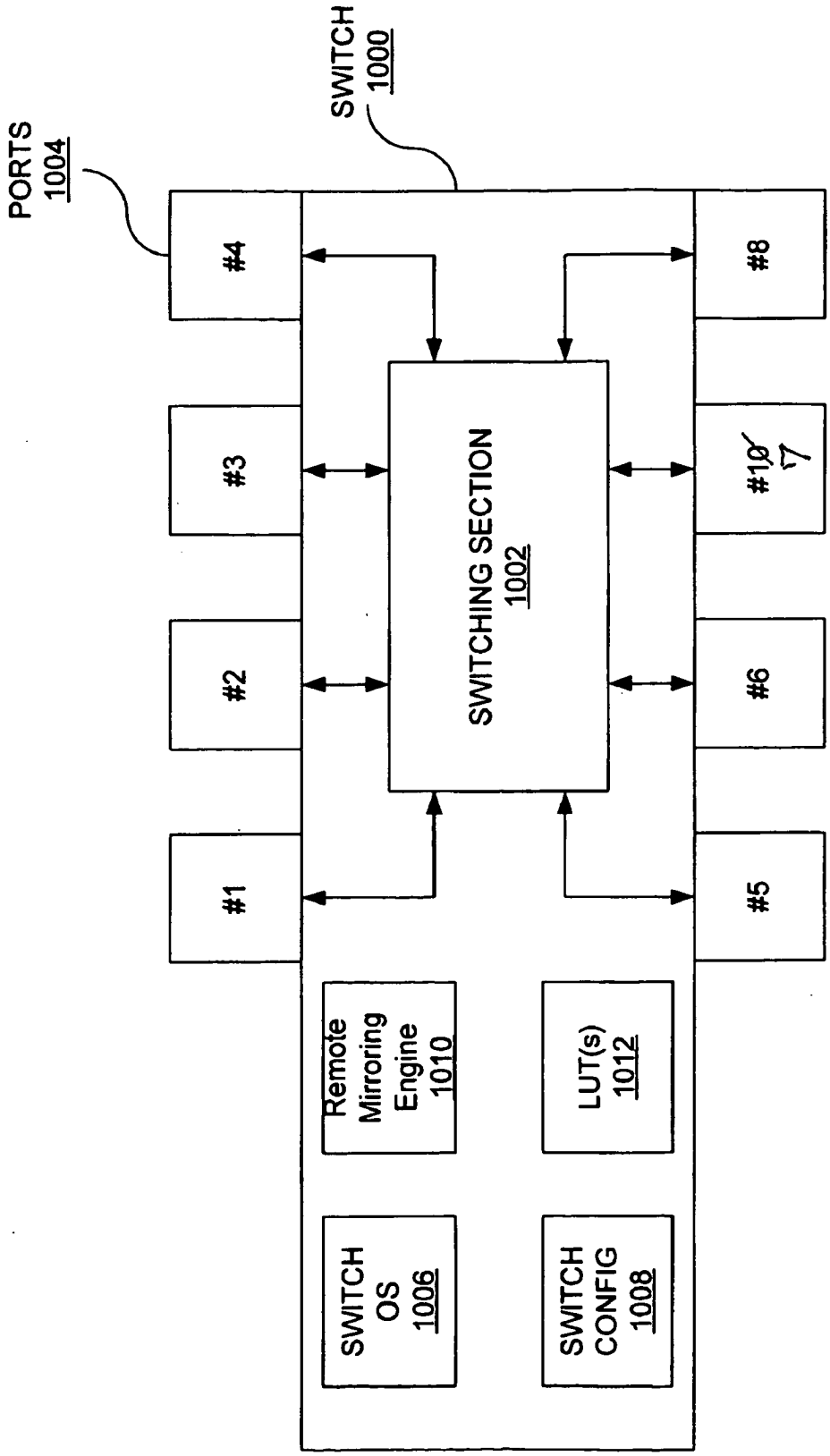
PORTS
1004
SWITCH
1000
#1
#2
#3
#4
#5
#6
#7
#8
SWITCHING SECTION
1002
Remote
Mirroring
Engine
1010
LUT(s)
1012
SWITCH
OS
1006
SWITCH
CONFIG
1008

FIG. 10

SPE RESPONSE FOR CERTIFICATE OF CORRECTION

Paper No.: _____

DATE : May 28, 2008

TO SPE OF : ART UNIT ~~2616~~ 2465

SUBJECT : Request for Certificate of Correction for Appl. No 10/813766 patent no7292573

Please respond to this request for a certificate of correction within 7 days.

Please review the requested changes/corrections as shown in the **COCIN** document(s) in the IFW application image. No new matter should be introduced, nor should the scope or meaning of the claims be changed.

Please complete the response (see below) and forward the completed response to scanning using document code COCX

Magdalene Talley

_____

Certificates of Correction Branch

703-308-9390 ext. 116

Thank You For Your Assistance

The request for issuing the above-identified correction(s) is hereby:

Note your decision on the appropriate box.

- ☑ **Approved** — **All** changes apply.
- ☐ **Approved in Part** — Specify below which changes **do not** apply.
- ☐ **Denied** — State the reasons for denial below.

Comments: _____

_____

_____

_____

_____

SPE — 2465 Art Unit

UNITED STATES PATENT AND TRADEMARK OFFICE

Commissioner for Patents
United States Patent and Trademark Office
P.O. Box 1450
Alexandria, VA 22313-1450
www.uspto.gov

JEFFERY J. BROSEMER, PH.D., ESQ
138 S. TELEGRAPH HILL ROAD
HOLMDEL NJ 07733

MAILED

MAR 18 2009

OFFICE OF PETITIONS

In re Application of	:	
Moon et al.	:	
Application No. 10/813,767	:	DECISION ON PETITION
Filed: March 31, 2004	:	
Attorney Docket No. NECL-04-001	:	

This is a decision on the petition under the unintentional provisions of 37 CFR 1.137(b), filed February 17, 2009, to revive the above-identified application.

The petition is **GRANTED**.

The application became abandoned for failure to reply in a timely manner to the Notice of Drawing Inconsistency with Specification mailed October 31, 2008. The Notice set a period for reply of one (1) month from the mail date of the Notice or within the time remaining in the time period set forth in the Notice of Allowability mailed October 7, 2008. Accordingly, the application became abandoned on January 8, 2009. A Notice of Abandonment was mailed February 10, 2009.

The petition satisfies the requirements of 37 CFR 1.137(b) in that petitioner has supplied (1) the reply in the form of an Amendment to the Specification , (2) the petition fee of $810.00, and (3) a proper statement of unintentional delay.

The address given on the petition differs from the address of record. A courtesy copy of this decision is being mailed to the address given on the petition; however, the Office will mail all future correspondence solely to the address of record.

Telephone inquiries concerning this decision should be directed to Joan Olszewski at (571) 272-7751.

This application is being referred to the Office of Data Management for processing into a patent.

/Liana Walsh/
Liana Walsh
Petitioner Examiner
Office of Petitions

cc: Jeffery J. Brosemer
Brosemer, Kolefas & Associates, LLC
One Bethany Road
Hazlet, NJ 07733

UNITED STATES PATENT AND TRADEMARK OFFICE

Commissioner for Patents
United States Patent and Trademark Office
P.O. Box 1450
Alexandria, VA 22313-1450
www.uspto.gov

ALIX YALE & RISTAS LLP
750 MAIN STREET
SUITE 1400
HARTFORD CT 06103

COPY MAILED
DEC 01 2006
OFFICE OF PETITIONS

In re Application of :
Cibotti :
Application No. 10/813,802 : ON PETITION
Filed: March 30, 2004 :
Attorney Docket No. STAN/375/US :
For: FUEL INJECTOR WITH HYDRAULIC FLOW CONTROL

This is a decision on the petition, filed September 11, 2006 (certificate of mailing date September 6, 2006), under 37 CFR 1.137(b) to revive the above-identified application.

The above-identified application became abandoned for failure to timely submit a reply within three (3) months of the mailing of the January 26, 2006 non-final Office action. No response being received and no extensions of time having been obtained, this application became abandoned on April 27, 2006. A Notice of Abandonment was mailed on August 28, 2006.

Applicant has submitted an amendment in reply to the January 26, 2006 non-final Office action, an acceptable statement of the unintentional nature of the delay in responding to the January 26, 2006 non-final Office action, and the petition fee.

The petition is **GRANTED**.

After the mailing of this decision the application will be forwarded to Technology Center AU 3752 for consideration of the amendment filed on September 11, 2006 (certificate of mailing date September 6, 2006).

Telephone inquiries should be directed to the undersigned at (571) 272-3230.

Shirene Willis Brantley
Senior Petitions Attorney
Office of Petitions

SPE RESPONSE FOR CERTIFICATE OF CORRECTION

Paper No.:20081215

DATE : December 15, 2008

TO SPE OF : ART UNIT 2611

SUBJECT : Request for Certificate of Correction on Patent No.: 7,356,085

A response is requested with respect to the accompanying request for a certificate of correction.

Please complete this form and return with file, within **7** days to:
Certificates of Correction Branch - ST (South Tower) 9A22
Palm location **7590** - Tel. No. (703) 305-8309

With respect to the change(s) requested, correcting Office and/or Applicant's errors, should the patent read as shown in the certificate of correction? No new matter should be introduced, nor should the scope or meaning of the claims be changed.

Thank You For Your Assistance **Certificates of Correction Branch**

The request for issuing the above-identified correction(s) is hereby:

Note your decision on the appropriated box.

☒ **Approved** All changes apply.

☐ **Approved in Part** Specify below which changes **do not** apply.

☐ **Denied** State the reasons for denial below.

Comments:

/David C. Payne/
Supervisory Patent Examiner, Art Unit 2611

UNITED STATES PATENT AND TRADEMARK OFFICE

Commissioner for Patents
United States Patent and Trademark Office
P.O. Box 1450
Alexandria, VA 22313-1450
www.uspto.gov

Paper No.

GOOGLE / FENWICK
SILICON VALLEY CENTER
801 CALIFORNIA ST.
MOUNTAIN VIEW CA 94041

COPY MAILED

JUL 15 2009

OFFICE OF PETITIONS

In re Application of	:	
Wang et al.	:	
Application No. 10/813,818	:	ON APPLICATION FOR
Filed: March 31, 2004	:	PATENT TERM ADJUSTMENT
Atty Docket No. 24207-10097	:	

This is in response to the REQUEST FOR RECONSIDERATION OF PATENT TERM ADJUSTMENT UNDER 37 C.F.R. § 1.705(b) filed May 4, 2009. Applicants request that the patent term adjustment be increased from the nine hundred forty-four (944) days reported on the initial Determination of Patent Term Adjustment under 35 U.S.C. 154(b) to one thousand one hundred ninety-one (1191) days. Citing Wyeth v. Dudas, 580 F. Supp. 2d 138, 88 U.S.P.Q. 2d 1538 (D.D.C. 2008), applicants request this correction solely on the basis that the Office will take in excess of three years to issue this patent[1].

As the instant application for patent term adjustment requests reconsideration of the patent term adjustment as it relates to the Office's failure to issue the patent within 3 years of the filing date, the application for patent term adjustment under 37 CFR 1.705(b) is DISMISSED as PREMATURE.

Knowledge of the actual date the patent issues is required to calculate the amount, if any, of additional patent term patentee is entitled to for Office failure to issue the patent within 3 years. See § 1.702(b). (This is true even where a request for

[1] Applicants assert this calculation on the basis that a request for continued examination (RCE) was filed in this application on September 3, 2008.

continued examination (RCE) was filed). The computer will not undertake the § 1.702(b) calculation until the actual date of issuance of the patent has been determined. Likewise, the computer will not calculate any further Office delay under § 1.702(a)(4) or applicant delay under § 1.704(c)(10) until the actual date of issuance of the patent has been determined. As such, the Office can not make a determination on the correctness of the patent term adjustment until the patent has issued.

Requesting reconsideration of the patent term adjustment to be indicated on the patent under 37 CFR 1.705(b) based on the initial determination of patent term adjustment and a projected issuance date of the patent (or even the filing date of the request for continued examination) is premature. Accordingly, it is appropriate to dismiss as premature such a request.

Rather than file an application for patent term adjustment under 37 CFR 1.705(b) contesting the 37 CFR 1.702(b) calculation at the time of the mailing of the notice of allowance, applicant is advised that they may wait until the time of the issuance of the patent and file a request for reconsideration of the patent term adjustment pursuant to 37 CFR 1.705(d). As the USPTO does not calculate the amount of time earned pursuant to 37 CFR 1.702(b) until the time of the issuance of the patent, the Office will consider any request for reconsideration of the patent term adjustment due to an error in the calculation of 37 CFR 1.702(b) to be timely if the request for reconsideration is filed within two months of the issuance of the patent. However, as to all other bases for contesting the initial determination of patent term adjustment received with the notice of allowance, applicant must timely file an application for patent term adjustment prior to the payment of the issue fee[2].

---

[2] For example, if applicant disputes both the calculation of patent term adjustment under 37 CFR 1.702(a)(1) for Office failure to mail a first Office action or notice of allowance not later than fourteen months after the date on which the application was filed and under 37 CFR 1.702(b) for Office failure to issue a patent within three years of the actual filing date of the application, then applicant must still timely file an application for patent term adjustment prior to the payment of the issue fee to contest the calculation of Office delay in issuing a first Office action or notice of allowance. See 37 CFR 1.705(b) and 35 U.S.C. 154(b)(3)(B). A dispute as to the calculation of the §1.702(a)(1) period raised on request for reconsideration of patent term adjustment under 37 CFR 1.705(d) will be dismissed as untimely filed.

The Office acknowledges submission of the $200.00 fee set forth in 37 CFR 1.18(e) for consideration of the application for patent term adjustment under 37 CFR 1.705(b).

Any request for reconsideration of the patent term adjustment indicated on the patent must be timely filed within 2 months after issuance pursuant to 37 CFR 1.705(d) and must include payment of the required fee under 37 CFR 1.18(e).

The Office of Data Management has been advised of this decision. This application is being referred to the Office of Data Management for issuance of the patent.

Telephone inquiries specific to this decision should be directed to the undersigned at (571) 272-3219.

Nancy Johnson
Senior Petitions Attorney
Office of Petitions

UNITED STATES PATENT AND TRADEMARK OFFICE

UNITED STATES DEPARTMENT OF COMMERCE
United States Patent and Trademark Office
Address: COMMISSIONER FOR PATENTS
P.O. Box 1450
Alexandria, Virginia 22313-1450
www.uspto.gov

GOOGLE / FENWICK
SILICON VALLEY CENTER
801 CALIFORNIA ST.
MOUNTAIN VIEW, CA 94041

Mail Date: 04/21/2010

Applicant	: Niniane Wang	: DECISION ON REQUEST FOR
Patent Number	: 7580568	: RECALCULATION of PATENT
Issue Date	: 08/25/2009	: TERM ADJUSTMENT IN VIEW
Appliction No	: 10/813,818	: OF WYETH AND NOTICE OF INTENT TO
Filed	: 03/31/2004	: ISSUE CERTIFICATE OF CORRECTION
		:

The Request for Recalculation is **GRANTED** to the extent indicated.

The patent term adjustment has been determined to be **1190** days. The USPTO will *sua sponte* issue a certificate of correction reflecting the amount of PTA days determined by the recalculation.

Prior to the issuance of the certificate of correction, the USPTO will afford patentee an opportunity to be heard and request reconsideration. Accordingly, patentee has **one month or thirty (30) days**, whichever is longer, to file a request for reconsideration of this patent term adjustment calculation. See 35 U.S.C. 154(b)(3)(B)(ii) and 37 CFR 1.322(a)(4). No extensions of time will be granted under 37 CFR 1.136.

Patentee should use document code PET.OP if electronically filing a request for reconsideration of this patent term adjustment calculation. The patentee must also include the information required by 37 CFR 1.705(b)(2) and the fee required by 37 CFR 1.18(e). If patentee does not file a timely request for reconsideration of this patent term adjustment calculation including the information required by 37 CFR 1.705(b)(2) and the fee required by 37 CFR 1.18(e), the USPTO will issue a certificate of correction reflecting the PTA determination noted above.

Patentee should be aware that in order to preserve the right to review in the United States District Court for the District of Columbia of the USPTO patent term adjustment determination, patentee must ensure that he or she also take the steps required under 35 U.S.C. 154(b)(4)(A) in a timely manner. Nothing in the request for recalculation should be construed as providing an alternative time frame for commencing a civil action under 35 U.S.C. 154(b)(4)(A).

Any questions concerning this decision should be directed to the Office of Patent Legal Administration at 571-272-7702.

UNITED STATES PATENT AND TRADEMARK OFFICE

Commissioner for Patents
United States Patent and Trademark Office
P.O. Box 1450
Alexandria, VA 22313-1450
www.uspto.gov

IPSG, P.C.
P.O. BOX 700640
SAN JOSE, CA 95170

COPY MAILED

OCT 15 2008

OFFICE OF PETITIONS

In re Application of
Armen Avoyan, et al.
Application No. 10/813,829
Filed: March 30, 2004
Attorney Docket No. P1258/LMRX-P037

ON PETITION

This is a decision on the petition under 37 CFR 1.137(b), filed June 20, 2008, to revive the above-identified application.

The petition is **GRANTED**.

The application became abandoned for failure to timely file a reply within the meaning of 37 CFR 1.113 to the final Office action mailed October 9, 2007. A Notice of Abandonment was mailed on May 28, 2008. On June 20, 2008, the present petition was filed.

The proposed reply required for consideration of a petition to revive must be a Notice of Appeal (and appeal fee required by 37 CFR 41.20(b)(2), an amendment that *prima facie* places the application in condition for allowance, a Request for Continued Examination and submission (37 CFR 1.114), or the filing of a continuing application under 37 CFR 1.53(b). See MPEP 711.03(c)(II)(A)(2).

The petition satisfies the requirements of 37 CFR 1.137(b) in that petitioner has supplied (1) the reply in the form of a Request for Continued Examination (RCE), including the fee of $810; (2) the petition fee of $1,540; and (3) an adequate statement of unintentional delay.

This application is being referred to Technology Center AU 1792 for processing of the RCE and for appropriate action by the Examiner in the normal course of business.

Telephone inquiries concerning this decision should be directed to the undersigned at (571) 272-3204. Inquiries relating to further prosecution should be directed to the Technology Center.

Sherry D. Brinkley
Petitions Examiner
Office of Petitions

UNITED STATES PATENT AND TRADEMARK OFFICE

Commissioner for Patents
United States Patent and Trademark Office
P.O. Box 1450
Alexandria, VA 22313-1450
www.uspto.gov

KILPATRICK STOCKTON LLP
1001 West Fourth Street
Winston-Salem, NC 27101

MAILED

MAY 1 2 2005

Technology Center 2100

In re Application of:
David AUERBACH, et al.
Application No. 10/813,838
Filed: March 31, 2004
For: METHODS AND SYSTEMS FOR PROCESSING CONTACT INFORMATION

DECISION ON REQUEST TO WITHDRAW AS ATTORNEY OR AGENT

This is a decision on the Request For Withdrawal As Attorney Under 37 CFR § 1.36 and 0.40(c) filed March 10, 2005.

A Revocation And Substitution Of Power Of Attorney Under 37 CFR § 1.36 was filed on April 28, 2005. The Power Of Attorney revoked all prior Powers Of Attorney and appointed Fenwick & West LLP as the attorneys of record of the instant application. The Power of Attorney of April 28, 2005 was accepted. Accordingly, all communications from the U.S. Patent and Trademark Office to applicant are to be conducted by Fenwick & West LLP.

For the above stated reasons, the request is **DISMISSED AS MOOT**.

No further communication to you regarding this application will be made.

For Vincent N. Trans
Special Program Examiner
Technology Center 2100
Computer Architecture, Software, and
Information Security
571-272-3613

UNITED STATES PATENT AND TRADEMARK OFFICE

UNITED STATES DEPARTMENT OF COMMERCE
United States Patent and Trademark Office
Address: COMMISSIONER FOR PATENTS
P.O. Box 1450
Alexandria, Virginia 22313-1450
www.uspto.gov

KENYON & KENYON LLP
ONE BROADWAY
NEW YORK, NY 10004

Mail Date: 04/21/2010

Applicant	: Jens Wolber	: DECISION ON REQUEST FOR
Patent Number	: 7568468	: RECALCULATION of PATENT
Issue Date	: 08/04/2009	: TERM ADJUSTMENT IN VIEW
Appliction No	: 10/813,853	: OF WYETH AND NOTICE OF INTENT TO
Filed	: 03/31/2004	: ISSUE CERTIFICATE OF CORRECTION
		:

The Request for Recalculation is **GRANTED** to the extent indicated.

The patent term adjustment has been determined to be **1215** days. The USPTO will *sua sponte* issue a certificate of correction reflecting the amount of PTA days determined by the recalculation.

Prior to the issuance of the certificate of correction, the USPTO will afford patentee an opportunity to be heard and request reconsideration. Accordingly, patentee has **one month or thirty (30) days**, whichever is longer, to file a request for reconsideration of this patent term adjustment calculation. See 35 U.S.C. 154(b)(3)(B)(ii) and 37 CFR 1.322(a)(4). No extensions of time will be granted under 37 CFR 1.136.

Patentee should use document code PET.OP if electronically filing a request for reconsideration of this patent term adjustment calculation. The patentee must also include the information required by 37 CFR 1.705(b)(2) and the fee required by 37 CFR 1.18(e). If patentee does not file a timely request for reconsideration of this patent term adjustment calculation including the information required by 37 CFR 1.705(b)(2) and the fee required by 37 CFR 1.18(e), the USPTO will issue a certificate of correction reflecting the PTA determination noted above.

Patentee should be aware that in order to preserve the right to review in the United States District Court for the District of Columbia of the USPTO patent term adjustment determination, patentee must ensure that he or she also take the steps required under 35 U.S.C. 154(b)(4)(A) in a timely manner. Nothing in the request for recalculation should be construed as providing an alternative time frame for commencing a civil action under 35 U.S.C. 154(b)(4)(A).

Any questions concerning this decision should be directed to the Office of Patent Legal Administration at 571-272-7702.

UNITED STATES PATENT AND TRADEMARK OFFICE

Commissioner for Patents
United States Patent and Trademark Office
P.O. Box 1450
Alexandria, VA 22313-1450
www.uspto.gov

COPY MAILED

FEB 16 2005

OFFICE OF PETITIONS

FROMMER LAWRENCE & HAUG
745 FIFTH AVENUE- 10TH FL.
NEW YORK, NY 10151

In re Application of
Spring, Hollenbeck, Hjelming, Hsiu, Pena, and Hamoui
Application No.: 10/813,858
Filed: March 30, 2004
Attorney Docket No: 450103-04598.2
FOR: CONTENT MANAGEMENT FOR RICH MEDIA PUBLISHING SYSTEM

: DECISION NOTING JOINDER

This is in response to the petition filed January 14, 2005, and the letter filed January 24, 2005, noting the joinder of inventor Pena in the above-cited application.

In view of the **joinder** of the inventor, further consideration under 37 CFR 1.47(a) is not necessary. Th petition under 37 CFR 1.47(a) filed January 14, 2005, is **moot**. This application does not have any Rule 1.47(a) status and no such status should appear on the file wrapper. This application need not be returned to this Office for further consideration under 37 CFR 1.47(a).

The Manual of Patent Examining Procedure ("MPEP"), § 409.03(j) provides that "[i]n the event the previously non-signing inventor decides to join the application by filing an executed oath or declaration complying with 37 CFR 1.63, the oath or declaration will be placed in the application file."

Accordingly, the declaration executed by all joint inventors is noted and made of record.

This application is being directed to Technology Center 2100, GAU 2164 for further processing.

Telephone inquiries regarding this communication should be directed to the undersigned at (571) 272-3222.

Kenya A. McLaughlin

Kenya A. McLaughlin
Petitions Attorney
Office of Petitions

UNITED STATES PATENT AND TRADEMARK OFFICE

UNITED STATES DEPARTMENT OF COMMERCE
United States Patent and Trademark Office
Address: COMMISSIONER FOR PATENTS
P.O. Box 1450
Alexandria, Virginia 22313-1450
www.uspto.gov

IBM CORPORATION
3039 CORNWALLIS RD.
DEPT. T81 / B503, PO BOX 12195
RESEARCH TRIANGLE PARK, NC 27709

Mail Date: 04/20/2010

Applicant	: Shu-Ping Chang	: DECISION ON REQUEST FOR
Patent Number	: 7636363	: RECALCULATION of PATENT
Issue Date	: 12/22/2009	: TERM ADJUSTMENT IN VIEW
Appliction No	: 10/813,865	: OF WYETH AND NOTICE OF INTENT TO
Filed	: 03/31/2004	: ISSUE CERTIFICATE OF CORRECTION
		:

The Request for Recalculation is **GRANTED** to the extent indicated.

The patent term adjustment has been determined to be **1606** days. The USPTO will *sua sponte* issue a certificate of correction reflecting the amount of PTA days determined by the recalculation.

Prior to the issuance of the certificate of correction, the USPTO will afford patentee an opportunity to be heard and request reconsideration. Accordingly, patentee has **one month or thirty (30) days**, whichever is longer, to file a request for reconsideration of this patent term adjustment calculation. See 35 U.S.C. 154(b)(3)(B)(ii) and 37 CFR 1.322(a)(4). No extensions of time will be granted under 37 CFR 1.136.

Patentee should use document code PET.OP if electronically filing a request for reconsideration of this patent term adjustment calculation. The patentee must also include the information required by 37 CFR 1.705(b)(2) and the fee required by 37 CFR 1.18(e). If patentee does not file a timely request for reconsideration of this patent term adjustment calculation including the information required by 37 CFR 1.705(b)(2) and the fee required by 37 CFR 1.18(e), the USPTO will issue a certificate of correction reflecting the PTA determination noted above.

Patentee should be aware that in order to preserve the right to review in the United States District Court for the District of Columbia of the USPTO patent term adjustment determination, patentee must ensure that he or she also take the steps required under 35 U.S.C. 154(b)(4)(A) in a timely manner. Nothing in the request for recalculation should be construed as providing an alternative time frame for commencing a civil action under 35 U.S.C. 154(b)(4)(A).

Any questions concerning this decision should be directed to the Office of Patent Legal Administration at 571-272-7702.

UNITED STATES PATENT AND TRADEMARK OFFICE

Commissioner for Patents
United States Patent and Trademark Office
P.O. Box 1450
Alexandria, VA 22313-1450
www.uspto.gov

FROMMER LAWRENCE & HAUG
745 FIFTH AVENUE- 10TH FL.
NEW YORK NY 10151

COPY MAILED

MAR 10 2005

OFFICE OF PETITIONS

In re Application of
Spring et al.
Application No.10/813,868
Filed: March 30, 2004
Attorney Docket Number: 450103-04598.1
Title: Rich Media Publishing

DECISION

This is in response to the petition under 37 CFR 1.47(a), filed January 14, 2005 and supplemented on January 24, 2005.

In view of the joinder of the inventor, further consideration under 37 CFR 1.47(a) is not necessary and the petition is considered to be **Dismissed As Moot** . This application does not have any Rule 1.47(a) status and no such status should appear on the file wrapper. This application need not be returned to this Office for further consideration under 37 CFR 1.47(a).

It is noted the declaration provided does not contain the mailing address of any of the inventors pursuant to 37 CFR 1.63 (c) (1). Petitioner may wish to submit an application data sheet pursuant to 37 CFR 1.76.

This application will be forwarded to the Office of Initial Patent Examination for further processing.

Telephone inquiries related to this decision may be directed to the undersigned at (571) 272-3215.

Charlema R. Grant
Petitions Attorney
Office of Petitions

UNITED STATES PATENT AND TRADEMARK OFFICE

Commissioner for Patents
United States Patent and Trademark Office
P.O. Box 1450
Alexandria, VA 22313-1450
www.uspto.gov

DCM

JUL 2 6 2004

In re Application of
Dominique Charmot, et al.
Serial Number: 10/813,872
Filed: March 30, 2004
For: ION BINDING COMPOSITIONS

PETITION UNDER
M.P.E.P.708.02 IV

This is in response to the petition filed March 30, 2004, requesting that the above-identified application be granted Special Status under Section 708.02 IV of the MPEP and 37 CFR 1.102(c) **(no fee required)**.

The request for Special Status considered under Section 708.02 IV of the MPEP is granted because criteria under 37 CFR 1.102(c) has been met.

Accordingly the petition is **GRANTED.**

Marian C Knode

Marian C. Knode, Special Programs Examiner
Technology Center 1700
Chemical and Materials Engineering

WILSON SONSINI GOODRICH & ROSATI
650 PAGE MILL ROAD
PALO ALTO CA 94304-1050

UNITED STATES PATENT AND TRADEMARK OFFICE

Commissioner for Patents
United States Patent and Trademark Office
P.O. Box 1450
Alexandria, VA 22313-1450
www.uspto.gov

FROMMER LAWRENCE & HAUG
745 FIFTH AVENUE- 10TH FL.
NEW YORK, NY 10151

COPY MAILED
MAR 0 3 2005
OFFICE OF PETITIONS

In re Application of	:
Spring, et al.	: DECISION NOTING JOINDER OF
Application No. 10/813,874	: INVENTOR AND PETITION
Filed: March 30, 2004	: UNDER 37 CFR 1.47(a) MOOT
Title: SUPPORT APPLICATIONS	:
FOR RICH MEDIA PUBLISHING	

This is in response to the "Petition Under 37 CFR 1.47(a)," filed January 14, 2005, and supplemented on January 24, 2005.

Petitioner has submitted a Declaration executed by the previously non-signing inventor Jose Armando Pena in compliance with 37 CFR 1.63. Therefore, in view of the joinder of the inventors, consideration under 37 CFR 1.47(a) is not necessary and the petition is considered moot. This application does not require Rule 1.47(a) status, and no such status should appear on the file wrapper. This application need not be returned to this Office for further consideration under 37 CFR 1.47(a).

The $200.00 petition fee, submitted January 14, 2004, will be refunded to deposit account no. 50-0320.

The file is being forwarded to Technology Center 2100 for examination *in due course*.

Telephone inquiries regarding this decision should be directed to Petitions Attorney Edward Tannouse at (571)272-3228.

Edward J. Tannouse
Petitions Attorney
Office of Petitions
United States Patent and Trademark Office

UNITED STATES PATENT AND TRADEMARK OFFICE

Commissioner for Patents
United States Patent and Trademark Office
P.O. Box 1450
Alexandria, VA 22313-1450
www.uspto.gov

PATENT DEPARTMENT – 53051
KILPATRICK STOCKTON LLP
1001 WEST FOURTH STREET
WINSTON-SALEM, NC 27101

MAILED

JUN 0 5 2005

Technology Center 2100

In re Application of:
Niniane WANG, et al.
Application No. 10/813,875
Filed: March 31, 2004
For: SYSTEMS AND METHODS FOR RANKING IMPLICIT SEARCH RESULTS

DECISION ON REQUEST TO WITHDRAW AS ATTORNEY OR AGENT

This is a decision on the Request For Withdrawal As Attorney Under 37 CFR § 1.36 and 0.40(c) filed March 10, 2005.

A Revocation And Substitution Of Power Of Attorney Under 37 CFR § 1.36 was filed on May 4, 2005. The Power Of Attorney revoked all prior Powers Of Attorney and appointed Fenwick & West, LLP as the attorney of record of the instant application. The Power of Attorney of May 4, 2005 was accepted. Accordingly, all communications from the U.S. Patent and Trademark Office to applicant are to be conducted by Fenwick & West LLP.

For the above stated reasons, the request is **DISMISSED AS MOOT**.

No further communication to you regarding this application will be made.

For Vincent N. Trans
Special Program Examiner
Technology Center 2100
Computer Architecture, Software, and Information Security
571-272-3613

cc: FENWICK & WEST LLP
SILICON VALLEY CENTER
801 CALIFORNIA STREET
MOUNTAIN VIEW, CA 94041

UNITED STATES PATENT AND TRADEMARK OFFICE

Commissioner for Patents
United States Patent and Trademark Office
P.O. Box 1450
Alexandria, VA 22313-1450
www.uspto.gov

GOOGLE / FENWICK
SILICON VALLEY CENTER
801 CALIFORNIA ST.
MOUNTAIN VIEW CA 94041

COPY MAILED

AUG 22 2007

OFFICE OF PETITIONS

In re Application of	:	
Wang et al.	:	
Application No. 10/813,875	:	DECISION GRANTING PETITION
Filed: March 31, 2004	:	UNDER 37 CFR 1.137(b)
Attorney Docket No. 24207-10106	:	

This is a decision on the petition, filed July 30, 2007, which is being treated as a petition under 37 CFR 1.137(b) to revive the instant non-provisional application for failure to timely notify the U.S. Patent and Trademark (USPTO) of the filing of an application in a foreign country, or under a multinational treaty that requires publication of applications eighteen months after filing. *See* 37 CFR 1.137(f).

The petition is **GRANTED**.

Petitioner states that the instant nonprovisional application is the subject of an application filed in an eighteen-month publication country on March 30, 2005. However, the USPTO was unintentionally not notified of this filing within 45 days subsequent to the filing of the subject application in an eighteen-month publication country.

In view of the above, this application became abandoned pursuant to 35 U.S.C. § 122(b)(2)(B)(iii) and 37 CFR 1.213(c) for failure to timely notify the Office of the filing of an application in a foreign country or under a multilateral international agreement that requires publication of applications 18 months after filing.

A petition to revive an application abandoned pursuant to 35 U.S.C. 122(b)(2)(B)(iii) for failure to notify the USPTO of a foreign filing must be accompanied by:

(1) the required reply which is met by the notification of such filing in a foreign country or under a multinational treaty;
(2) the petition fee as set forth in 37 CFR 1.17(m); and
(3) a statement that the entire delay in filing the required reply from the due date of the reply until the filing of a grantable petition was unintentional.

The instant petition has been found to be in compliance with 37 CFR 1.137(b). Accordingly, the failure to timely notify the USPTO of a foreign or international filing within 45 days after the date of filing of such foreign or international application as provided by 35 U.S.C. § 122(b)(2)(B)(iii) and 37 CFR 1.213(c) is accepted as having been unintentionally delayed.

The previous Request and Certification under 35 U.S.C. § 122(b)(2)(B)(i) has been rescinded. A Notice Regarding Rescission of Nonpublication Request which sets forth the projected publication date of November 29, 2007, accompanies this decision on petition.

This application is being forwarded to Technology Center AU 2163 to await a reply to the outstanding final Office action mailed June 4, 2007. Failure to timely reply will again result in the abandonment of the application.

Telephone inquiries concerning this decision should be directed to the undersigned at (571) 272-3206.

Liana Walsh
Petitions Examiner
Office of Petitions

ATTACHMENT: Notice Regarding Rescission of Nonpublication Request

UNITED STATES PATENT AND TRADEMARK OFFICE

UNITED STATES DEPARTMENT OF COMMERCE
United States Patent and Trademark Office
Address: COMMISSIONER FOR PATENTS
P.O. Box 1450
Alexandria, Virginia 22313-1450
www.uspto.gov

APPLICATION NUMBER	FILING/RECEIPT DATE	FIRST NAMED APPLICANT	ATTY. DOCKET NO.
10/813,875	03/31/2004	Niniane Wang	24207-10106

CONFIRMATION NO. 5752

62296
GOOGLE / FENWICK
SILICON VALLEY CENTER
801 CALIFORNIA ST.
MOUNTAIN VIEW, CA 94041

Date Mailed: 08/22/2007

Communication Regarding Rescission Of Nonpublication Request and/or Notice of Foreign Filing

Applicant's rescission of the previously-filed nonpublication request and/or notice of foreign filing is acknowledged. The paper has been reflected in the Patent and Trademark Office's (USPTO's) computer records so that the earliest possible projected publication date can be assigned.

The projected publication date is 11/29/2007.

If applicant rescinded the nonpublication request before or on the date of "foreign filing,"[1] then no notice of foreign filing is required.

If applicant foreign filed the application after filing the above application and before filing the rescission, and the rescission did not also include a notice of foreign filing, then a notice of foreign filing (not merely a rescission) is required to be filed within 45 days of the date of foreign filing. See 35 U.S.C. § 122(b)(2)(B)(iii), and Clarification of the United States Patent and Trademark Office's Interpretation of the Provisions of 35 U.S.C. § 122(b)(2)(B)(ii)-(iv), 1272 Off. Gaz. Pat. Office 22 (July 1, 2003).

If a notice of foreign filing is required and is not filed within 45 days of the date of foreign filing, then the application becomes abandoned pursuant to 35 U.S.C. § 122(b)(2)(B)(iii). In this situation, applicant should either file a petition to revive or notify the Office that the application is abandoned. See 37 CFR 1.137(f). Any such petition to revive will be forwarded to the Office of Petitions for a decision. Note that the filing of the petition will not operate to stay any period of reply that may be running against the application.

Questions regarding petitions to revive should be directed to the Office of Petitions at (571) 272-3282. Questions regarding publications of patent applications should be directed to the patent application publication hotline at (703) 605-4283 or by e-mail pgpub@uspto.gov.

[1] Note, for purpose of this notice, that "foreign filing" means "filing an application directed to the same invention in another country, or under a multilateral international agreement, that requires publication of applications 18 months after filing".

DATE 8/22/07 APPLICATION NUMBER 10813875

DOC CODE CTMS DOC DATE 8/22/07

DELIVER THE ATTACHED FIFLE/DOCUMENT TO THE TC SCANNING CENTER

CONTRACTOR: THE ATTACHED FILE/DOCUMENT MUST BE INDEXED AND SCANNED INTO IFW WITHIN **8** WORK HOURS; UPLOADING OF THE SCANNED IMAGES SHOULD OCCUR NO LATER THAN **16** WORK HOURS FOLLOWING RECEIPT OF THIS REQUEST

AFTER SCANNING, ORIGINAL DOCUMENTS SHOULD BE BOXED IN ACCORDANCE WITH INSTRUCTIONS

UNITED STATES PATENT AND TRADEMARK OFFICE

UNITED STATES DEPARTMENT OF COMMERCE
United States Patent and Trademark Office
Address: COMMISSIONER FOR PATENTS
P.O. Box 1450
Alexandria, Virginia 22313-1450
www.uspto.gov

APPLICATION NUMBER	FILING/RECEIPT DATE	FIRST NAMED APPLICANT	ATTY. DOCKET NO.
10/813,875	03/31/2004	Niniane Wang	24207-10106

CONFIRMATION NO. 5752

62296
GOOGLE / FENWICK
SILICON VALLEY CENTER
801 CALIFORNIA ST.
MOUNTAIN VIEW, CA 94041

Date Mailed: 08/22/2007

Communication Regarding Rescission Of Nonpublication Request and/or Notice of Foreign Filing

Applicant's rescission of the previously-filed nonpublication request and/or notice of foreign filing is acknowledged. The paper has been reflected in the Patent and Trademark Office's (USPTO's) computer records so that the earliest possible projected publication date can be assigned.

The projected publication date is 11/29/2007.

If applicant rescinded the nonpublication request before or on the date of "foreign filing,"[1] then no notice of foreign filing is required.

If applicant foreign filed the application after filing the above application and before filing the rescission, and the rescission did not also include a notice of foreign filing, then a notice of foreign filing (not merely a rescission) is required to be filed within 45 days of the date of foreign filing. See 35 U.S.C. § 122(b)(2)(B)(iii), and Clarification of the United States Patent and Trademark Office's Interpretation of the Provisions of 35 U.S.C. § 122(b)(2)(B)(ii)-(iv), 1272 Off. Gaz. Pat. Office 22 (July 1, 2003).

If a notice of foreign filing is required and is not filed within 45 days of the date of foreign filing, then the application becomes abandoned pursuant to 35 U.S.C. § 122(b)(2)(B)(iii). In this situation, applicant should either file a petition to revive or notify the Office that the application is abandoned. See 37 CFR 1.137(f). Any such petition to revive will be forwarded to the Office of Petitions for a decision. Note that the filing of the petition will not operate to stay any period of reply that may be running against the application.

Questions regarding petitions to revive should be directed to the Office of Petitions at (571) 272-3282. Questions regarding publications of patent applications should be directed to the patent application publication hotline at (703) 605-4283 or by e-mail pgpub@uspto.gov.

[1] Note, for purpose of this notice, that "foreign filing" means "filing an application directed to the same invention in another country, or under a multilateral international agreement, that requires publication of applications 18 months after filing".

UNITED STATES PATENT AND TRADEMARK OFFICE

Commissioner for Patents
United States Patent and Trademark Office
P.O. Box 1450
Alexandria, VA 22313-1450
www.uspto.gov

TOWNSEND AND TOWNSEND AND CREW, LLP
TWO EMBARCADERO CENTER
EIGHTH FLOOR
SAN FRANCISCO, CA 94111-3834

COPY MAILED

OCT 2 1 2004

OFFICE OF PETITIONS

In re Application of :
Teresa Meade, Susan Ganter, :
Mike Pogue, Mary Young, Sheila : DECISION GRANTING PETITION
Littlehorn and Susan Matthews : UNDER 37 CFR 1.47(a)
Brown :
Application No. 10/813,877
Filed: March 30, 2004
Title: INFANT RESTRAINT
SYSTEMS AND METHODS

This is in response to the "Petition Under 37 CFR 1.47(a)," filed September 16, 2004.

The petition is **granted**.

Petitioner has shown that the non-signing inventor has refused to join in the filing of the above-identified application.

The above-identified application and papers have been reviewed and found in compliance with 37 CFR 1.47(a). This application is hereby accorded Rule 1.47(a) status. As provided in Rule 1.47(c), this Office will forward notice of this application's filing to the non-signing inventor at the address given in the Declaration. Notice of the filing of this application will also be published in the Official Gazette.

The file is being forwarded to the Office of Initial Patent Examination for further processing.

Telephone inquiries regarding this decision should be directed to the undersigned at (571)272-3228.

Edward J. Tannouse
Petitions Attorney
Office of Petitions
United States Patent and Trademark Office

UNITED STATES PATENT AND TRADEMARK OFFICE

Commissioner for Patents
United States Patent and Trademark Office
P.O. Box 1450
Alexandria, VA 22313-1450
www.uspto.gov

COPY MAILED

OCT 21 2004

OFFICE OF PETITIONS

MIKE POGUE
1371 BROOKCRESS DRIVE
GOLDEN, CO 80401

In re Application of
Teresa Meade, Susan Ganter, Mike Pogue, Mary Young, Sheila Littlehorn and Susan Matthews Brown
Application No. 10/813,877
Filed: March 30, 2004
Title: INFANT RESTRAINT SYSTEMS AND METHODS

Dear MIKE POGUE:

You are named as a joint inventor in the above identified United States patent application, filed under the provisions of 35 U.S.C. 116 (United States Code), and 37 CFR 1.47(a), Rules of Practice in Patent Cases. Should a patent be granted on the application you will be designated therein as a joint inventor.

As a named inventor you are entitled to inspect any paper in the file wrapper of the application, order copies of all or any part thereof (at a prepaid cost per 37 CFR 1.19) or make your position of record in the application. Alternatively, you may arrange to do any of the preceding through a registered patent attorney or agent presenting written authorization from you. If you care to join the application, counsel of record (see below) would presumably assist you. Joining in the application would entail the filing of an appropriate oath or declaration by you pursuant to 37 CFR 1.63.

Telephone inquiries regarding this communication should be directed to the undersigned at (571)272-3228. Requests for information regarding your application should be directed to the File Information Unit at (703) 308-2733. Information regarding how to pay for and order a copy of the application, or a specific paper in the application, should be directed to Certification Division at (703)308-9726 or 1(800)972-6382 (outside the Washington D.C. area).

Edward J. Tannouse
Petitions Attorney
Office of Petitions
United States Patent and Trademark Office

TOWNSEND AND TOWNSEND AND CREW, LLP
TWO EMBARCADERO CENTER
EIGHTH FLOOR
SAN FRANCISCO, CA 94111-3834

SPE RESPONSE FOR CERTIFICATE OF CORRECTION

Paper No.: _____

DATE : August 17, 2006

TO SPE OF : ART UNIT 1724

SUBJECT : Request for Certificate of Correction for Appl. No.: 10/813887 Patent No.: 6,991,734

Please respond to this request for a certificate of correction within 7 days.

Please review the requested changes/corrections as shown in the **COCIN** document(s) in the IFW application image. No new matter should be introduced, nor should the scope or meaning of the claims be changed.

Please complete the response (see below) and forward the completed response to scanning using document code **COCX**.

Magdalene Talley

Certificates of Correction Branch

703-308-9390 ext. 116

Thank You For Your Assistance

The request for issuing the above-identified correction(s) is hereby:

Note your decision on the appropriate box.

- [X] **Approved** — All changes apply.
- [ ] **Approved in Part** — Specify below which changes **do not** apply.
- [ ] **Denied** — State the reasons for denial below.

Comments: OK

8-23-06

DUANE SMITH
SUPERVISORY PATENT EXAMINER

SPE

1724

Art Unit

PTOL-306 (REV. 7/03)

U.S. DEPARTMENT OF COMMERCE Patent and Trademark Office

UNITED STATES PATENT AND TRADEMARK OFFICE

Commissioner for Patents
United States Patent and Trademark Office
P.O. Box 1450
Alexandria, VA 22313-1450
www.uspto.gov

PATENT DEPARTMENT – 53051
KILPATRICK STOCKTON LLP
1001 WEST FOURTH STREET
WINSTON-SALEM, NC 27101

MAILED

JUN 0 5 2005

Technology Center 2100

In re Application of:
Mihai Florin IONESCU
Application No. 10/813,888
Filed: March 31, 2004
For: SYSTEMS AND METHODS OF REPLICATING ALL OR PART OF A DATA STORE

DECISION ON REQUEST TO WITHDRAW AS ATTORNEY OR AGENT

This is a decision on the Request For Withdrawal As Attorney Under 37 CFR § 1.36 and 0.40(c) filed March 10, 2005.

A Revocation And Substitution Of Power Of Attorney Under 37 CFR § 1.36 was filed on May 4, 2005. The Power Of Attorney revoked all prior Powers Of Attorney and appointed Fenwick & West LLP as the attorney(s) of record of the instant application. The Power of Attorney of May 4, 2005 was accepted. Accordingly, all communications from the U.S. Patent and Trademark Office to applicant are to be conducted by Fenwick & West, LLP.

For the above stated reasons, the request is **DISMISSED AS MOOT**.

No further communication to you regarding this application will be made.

For Vincent N. Trans
Special Program Examiner
Technology Center 2100
Computer Architecture, Software, and Information Security
571-272-3613

cc: Fenwick & West LLP
Silicon Valley Center
801 California Street
Mountain View, CA 94041

UNITED STATES PATENT AND TRADEMARK OFFICE

Commissioner for Patents
United States Patent and Trademark Office
P.O. Box 1450
Alexandria, VA 22313-1450
www.uspto.gov

GOOGLE / FENWICK
SILICON VALLEY CENTER
801 CALIFORNIA ST.
MOUNTAIN VIEW CA 94041

COPY MAILED

JUN 29 2009

OFFICE OF PETITIONS

In re Patent No. 7,499,958	:	
MIHAI FLORIN IONESCU	:	DECISION ON
Issue Date: March 3, 2009	:	REQUEST FOR RECONSIDERATION
Application No. 10/813,888	:	OF
Filed: March 31, 2004	:	PATENT TERM ADJUSTMENT
Attorney Docket No. 24207-10109	:	

This is a decision on the "REQUEST FOR RECONSIDERATION OF PATENT TERM ADJUSTMENT UNDER 37 C.F.R. § 1.705(d)" filed April 28, 2009, requesting that the patent term adjustment determination for the above-identified patent be changed from five hundred five days (505) days to eight hundred fifty-seven (857) days.

The request for reconsideration of patent term adjustment is **DISMISSED**.

On March 3, 2009, the above-identified application matured into U.S. Patent No. 7,499,958 with a revised patent term adjustment of 505 days. This request for reconsideration of patent term adjustment was timely filed within two months of the issue date of the patent. See 37 CFR 1.705(d).

Patentees request recalculation of the patent term adjustment based on the decision in Wyeth v. Dudas, 580 F. Supp. 2d 138, 88 U.S.P.Q. 2d 1538 (D.D.C. 2008). Patentees assert:

> In view of *Wyeth v. Dudas,* 580 F. Supp. 2d 138 (D. D.C. 2008) and the plain reading of the Patent Term Adjustment statute (35 U.S.C. § 154), Applicant submits that the Applicant is entitled to the sum of the delays under Rules 703(a) and 703(b) minus the days of Applicant delay, currently calculated to be 857 days ((505 + 352) -

> 0 = 857 days). According to the Court's interpretation, the statute does not permit the PTO to excuse one source of delay simply because it caused another source of delay by interpreting delays under Rule 703(a) and Rule 703(b) to be overlapping when such delays do not occur on the same calendar days. The delays under Rules 703(a) and 703(b) in this case are non-overlapping because the PTO delay from June 1, 2005 to October 18, 2006 (delay under Rule 703(a)) does not overlap with the PTO delay from April 1, 2007 to March 17, 2008 (delay under Rule 703(b)). Therefore, Applicant requests a PTA calculation based on the delays under Rules 703(a) and 703(b) minus the days of Applicant delay, yielding a calculation of (505 + 352) - 0 = 857 days.

Request dated 04/28/09, pp. 2-3.

The period of adjustment under 37 CFR 1.702(b) ("Three Year Delay") is the number of days, if any, in the period beginning on the day after the date that is three years after the date on which the application was filed under 35 U.S.C. 111(a) or the national stage commenced under 35 U.S.C. 371(b) or (f) in an international application and ending on the date a patent was issued.[1]

---

[1] but not including the sum of the following periods:

(1) The number of days, if any, in the period beginning on the date on which a request for continued examination of the application under 35 U.S.C. 132(b) was filed and ending on the date the patent was issued;

(2)(i) The number of days, if any, in the period beginning on the date an interference was declared or redeclared to involve the application in the interference and ending on the date that the interference was terminated with respect to the application; and

(ii) The number of days, if any, in the period beginning on the date prosecution in the application was suspended by the Office due to interference proceedings under 35 U.S.C. 135(a) not involving the application and ending on the date of the termination of the suspension;

(3)(i) The number of days, if any, the application was maintained in a sealed condition under 35 U.S.C. 181;

(ii) The number of days, if any, in the period beginning on the date of mailing of an examiner's answer under § 41.39 of this title in the application under secrecy order and ending on the date the secrecy order was removed;

(iii) The number of days, if any, in the period beginning on the date applicant was notified that an interference would be declared but for the secrecy order and ending on the date the secrecy order was

In this instance, the Three Year Delay period of 352 days is calculated based on the application having been filed under 35 U.S.C. 111(a) on March 31, 2004, and a request for continued examination ("RCE") having been filed in this application on March 17, 2008. The filing of a RCE cuts-off the applicant's ability to accumulate any additional patent term adjustment against the three-year pendency provision, but does not otherwise affect patent term adjustment. 37 CFR 1.703(b)(1).

Patentees assert that in addition to this 352-day period, they are entitled to a period of adjustment due to examination delay, pursuant to 37 CFR 1.702(a)(1), of 505 days for the failure by the Office to mail at least one of a notification under 35 U.S.C. 132 not later than fourteen months after the date on which the application was filed under 35 U.S.C. 111(a). A nonfinal Office action was mailed on October 18, 2006, 14 months and 505 days after the application was filed on March 31, 2004.

Under 37 CFR 1.703(f), patentees are entitled to a period of patent term adjustment equal to the period of delays based on the grounds set forth in 37 CFR 1.702 reduced by the period of time equal to the period of time during which patentees failed to engage in reasonable efforts to conclude prosecution pursuant to 37 CFR 1.704. In other words, the period of Office delay reduced by the period of applicant delay. The period of reduction of zero days for applicant delay is not in dispute.

Patentees do not dispute that the total period of Office delay is the sum of the period of Three Year Delay (352 days) and the period of Examination Delay (505 days) to the extent that these periods of delay are not overlapping. However, patentees

---

removed; and

(iv) The number of days, if any, in the period beginning on the date of notification under § 5.3(c) of this chapter and ending on the date of mailing of the notice of allowance under 35 U.S.C. 151; and,

(4) The number of days, if any, in the period beginning on the date on which a notice of appeal to the Board of Patent Appeals and Interferences was filed under 35 U.S.C. 134 and § 41.31 of this title and ending on the date of the last decision by the Board of Patent Appeals and Interferences or by a Federal court in an appeal under 35 U.S.C. 141 or a civil action under 35 U.S.C. 145, or on the date of mailing of either an action under 35 U.S.C. 132, or a notice of allowance under 35 U.S.C. 151, whichever occurs first, if the appeal did not result in a decision by the Board of Patent Appeals and Interferences.

contend that no portion of the Three Year Delay period overlaps with the period of 14 month examination delay. Accordingly, patentees submit that the total period of adjustment for Office delay is 857 days, which is the sum of the period of Three Year Delay (352 days) and the period of Examination Delay (505 days), reduced by the period of overlap (0 days). As such, patentees assert entitlement to a patent term adjustment of 857 days (352 + 505 reduced by 0 overlap - 0 (applicant delay)).

Patentees' arguments have been considered, but are not persuasive. The Office concurs that as of the filing of the RCE on March 17, 2008, the application was pending three years and 352 days after its filing date. Further, the Office agrees that the action detailed above was not taken within the specified time frame, and thus, the entry of a period of adjustment of 505 days is proper. At issue is whether patentees should accrue 352 days of patent term adjustment for the Office taking in excess of three years to issue the patent, as well as, 505 days for Office failure to take a certain action within a specified time frame (or examination delay).

The Office contends that all 352 days overlap. Patentees' calculation of the period of overlap is inconsistent with the Office's interpretation of this provision. 35 U.S.C. 154(b)(2)(A) limits the adjustment of patent term, as follows:

> to the extent that the periods of delay attributable to grounds specified in paragraph (1) overlap, the period of any adjustment granted under this subsection shall not exceed the actual number of days the issuance of the patent was delayed.

Likewise, 37 CFR 1.703(f) provides that:

> To the extent that periods of delay attributable to the grounds specified in § 1.702 overlap, the period of adjustment granted under this section shall not exceed the actual number of days the issuance of the patent was delayed.

As explained in *Explanation of 37 CFR 1.703(f) and of the United States Patent and Trademark Office Interpretation of 35 U.S.C. 154(b)(2)(A)*, 69 Fed. Reg. 34283 (June 21, 2004), the Office interprets 35 U.S.C. 154(b)(2)(A) as permitting either patent

term adjustment under 35 U.S.C. 154(b)(1)(A)(i)-(iv), or patent term adjustment under 35 U.S.C. 154(b)(1)(B), but not as permitting patent term adjustment under both 35 U.S.C. 154(b)(1)(A)(i)-(iv) and 154(b)(1)(B). Accordingly, the Office implements the overlap provision as follows:

> If an application is entitled to an adjustment under 35 U.S.C. 154(b)(1)(B), the entire period during which the application was pending (except for periods excluded under 35 U.S.C. 154(b)(1)(B)(i)-(iii)), and not just the period beginning three years after the actual filing date of the application, is the period of delay under 35 U.S.C. 154(b)(1)(B) in determining whether periods of delay overlap under 35 U.S.C. 154(b)(2)(A). Thus, any days of delay for Office issuance of the patent more than 3 years after the filing date of the application, which overlap with the days of patent term adjustment accorded prior to the issuance of the patent will not result in any additional patent term adjustment. See 35 U.S.C. 154(b)(1)(B), 35 U.S.C. 154(b)(2)(A), and 37 CFR § 1.703(f). See *Changes to Implement Patent Term Adjustment Under Twenty Year Term; Final Rule*, 65 Fed. Reg. 56366 (Sept. 18, 2000). See also *Revision of Patent Term Extension and Patent Term Adjustment Provisions; Final Rule*, 69 Fed. Reg. 21704 (April 22, 2004), 1282 Off. Gaz. Pat. Office 100 (May 18, 2004). See also *Explanation of 37 CFR 1.703(f) and of the United States Patent and Trademark Office Interpretation of 35 U.S.C. 154(b)(2)(A)*, 69 Fed. Reg. 34283 (June 21, 2004).

The current wording of 37 CFR 1.703(f) was revised in response to the misinterpretation of this provision by a number of Patentees. The rule was slightly revised to more closely track the corresponding language of 35 U.S.C. 154(b)(2)(A). The relevant portion differs only to the extent that the statute refers back to provisions of the statute whereas the rule refers back to sections of the rule. This was not a substantive change to the rule nor did it reflect a change of the Office's interpretation of 35 U.S.C. 154(b)(2)(A). As stated in the *Explanation of 37 CFR 1.703(f) and of the United States Patent and Trademark Office Interpretation of 35 U.S.C. 154(b)(2)(A)*, the Office has consistently taken the position that if an application is entitled to an adjustment under the three-year pendency provision of 35 U.S.C. 154(b)(1)(B), the entire period

during which the application was pending before the Office (except for periods excluded under 35 U.S.C. 154(b)(1)(B)(i)-(iii)), and not just the period beginning three years after the actual filing date of the application, is the relevant period under 35 U.S.C. 154(b)(1)(B) in determining whether periods of delay "overlap" under 35 U.S.C. 154(b)(2)(A).

This interpretation is consistent with the statute. Taken together the statute and rule provide that to the extent that periods of delay attributable to grounds specified in 35 U.S.C. 154(b)(1) and in corresponding § 1.702 overlap, the period of adjustment granted shall not exceed the actual number of days the issuance of the patent was delayed. The grounds specified in these sections cover the A) guarantee of prompt Patent and Trademark Office responses, B) guarantee of no more than 3 year application pendency, and C) guarantee or adjustments for delays due to interference, secrecy orders and appeals. A section by section analysis of 35 U.S.C. 154(b)(2)(A) specifically provides that:

> Section 4402 imposes limitations on restoration of term. In general, pursuant to [35 U.S.C.] 154(b)(2)(A)-(C), total adjustments granted for restorations under [35 U.S.C. 154](b)(1) are reduced as follows: (1) To the extent that there are multiple grounds for extending the term of a patent that may exist simultaneously (e.g., delay due to a secrecy order under [35 U.S.C.] 181 and administrative delay under [35 U.S.C.] 154(b)(1)(A)), the term should not be extended for each ground of delay but only for the actual number of days that the issuance of a patent was delayed; See 145 Cong. Rec. S14,718[2]

As such, the period for over three year pendency does not overlap only to the extent that the actual dates in the period beginning three years after the date on which the application was filed overlap with the actual dates in the periods for

---

[2] The AIPA is title IV of the Intellectual Property and Communications Omnibus Reform Act of 1999 (S. 1948), which was incorporated and enacted as law as part of Pub. L. 106-113. The Conference Report for H.R. 3194, 106th Cong. 1st Sess. (1999), which resulted in Pub. L. 106-113, does not contain any discussion (other than the incorporated language) of S. 1948. A section-by-section analysis of S. 1948, however, was printed in the Congressional Record at the request of Senator Lott, See 145 Cong. Rec. S14,708-26 (1999)(daily ed. Nov. 17, 1999).

failure of the Office to take action within specified time frames. In other words, consideration of the overlap does not begin three years after the filing date of the application.

In this instance, the relevant period under 35 U.S.C. 154(b)(1)(B) in determining whether periods of delay "overlap" under 35 U.S.C. 154(b)(2)(A) is the entire period during which the application was pending before the Office, from the date of the filing of the application on March 31, 2004, to the date of the filing of the RCE on March 17, 2008 (except for periods excluded under 35 U.S.C. 154(b)(1)(b)(i)-(iii). The period of delay of 352 days for the Office taking in excess of three years to issue the patent overlaps with the 505 days accorded pursuant to 37 CFR 1.702(a)(1) during the pendency of the application prior to the filing of the RCE. The period of 505 days is considered the actual number of days that the issuance of the patent was delayed, considering the 352 days over three years to the filing of the RCE. As the 505 days had already been accorded, at issuance, the Office properly entered no additional days of patent term adjustment for the Office taking in excess of three years to issue the patent.

In view thereof, no adjustment to the patent term will be made. The revised determination of patent term adjustment at the time of the issuance of the patent will remain 505 days.

The Office acknowledges the submission of the $200.00 fee set forth in 37 CFR 1.18(e). No additional fees are required.

Telephone inquiries specific to this matter should be directed to the undersigned at (571) 272-3211.

Christina Tartera Donnell

Christina Tartera Donnell
Senior Petitions Attorney
Office of Petitions

UNITED STATES PATENT AND TRADEMARK OFFICE

UNITED STATES DEPARTMENT OF COMMERCE
United States Patent and Trademark Office
Address: COMMISSIONER FOR PATENTS
P.O. Box 1450
Alexandria, Virginia 22313-1450
www.uspto.gov

APPL NO.	FILING OR 371 (c) DATE	ART UNIT	FIL FEE REC'D	ATTY.DOCKET NO	DRAWINGS	TOT CLMS	IND CLMS
10/813,889	03/31/2004	2124	1920	004-40218	12	60	8

CONFIRMATION NO. 5753

CORRECTED FILING RECEIPT

OC000000013393386

22120
ZAGORIN O'BRIEN & GRAHAM, L.L.P.
7600B N. CAPITAL OF TEXAS HWY.
SUITE 350
AUSTIN, TX 78731

Date Mailed: 07/30/2004

Receipt is acknowledged of this regular Patent Application. It will be considered in its order and you will be notified as to the results of the examination. Be sure to provide the U.S. APPLICATION NUMBER, FILING DATE, NAME OF APPLICANT, and TITLE OF INVENTION when inquiring about this application. Fees transmitted by check or draft are subject to collection. Please verify the accuracy of the data presented on this receipt. **If an error is noted on this Filing Receipt, please write to the Office of Initial Patent Examination's Filing Receipt Corrections, facsimile number 703-746-9195. Please provide a copy of this Filing Receipt with the changes noted thereon. If you received a "Notice to File Missing Parts" for this application, please submit any corrections to this Filing Receipt with your reply to the Notice. When the USPTO processes the reply to the Notice, the USPTO will generate another Filing Receipt incorporating the requested corrections (if appropriate).**

Applicant(s)

Raj Prakash, Saratoga, CA;
Kurt J. Goebel, Dayton, OH;
Fu-Hwa Wang, Saratoga, CA;

Assignment For Published Patent Application

Sun Microsystems, Inc.;

Domestic Priority data as claimed by applicant

Foreign Applications

If Required, Foreign Filing License Granted: 06/10/2004

Projected Publication Date: Request for Non-Publication Acknowledged

Non-Publication Request: Yes

Early Publication Request: No

Title

Portable executable source code representations

Preliminary Class
717

LICENSE FOR FOREIGN FILING UNDER
Title 35, United States Code, Section 184
Title 37, Code of Federal Regulations, 5.11 & 5.15

GRANTED

The applicant has been granted a license under 35 U.S.C. 184, if the phrase "IF REQUIRED, FOREIGN FILING LICENSE GRANTED" followed by a date appears on this form. Such licenses are issued in all applications where the conditions for issuance of a license have been met, regardless of whether or not a license may be required as set forth in 37 CFR 5.15. The scope and limitations of this license are set forth in 37 CFR 5.15(a) unless an earlier license has been issued under 37 CFR 5.15(b). The license is subject to revocation upon written notification. The date indicated is the effective date of the license, unless an earlier license of similar scope has been granted under 37 CFR 5.13 or 5.14.

This license is to be retained by the licensee and may be used at any time on or after the effective date thereof unless it is revoked. This license is automatically transferred to any related applications(s) filed under 37 CFR 1.53(d). This license is not retroactive.

The grant of a license does not in any way lessen the responsibility of a licensee for the security of the subject matter as imposed by any Government contract or the provisions of existing laws relating to espionage and the national security or the export of technical data. Licensees should apprise themselves of current regulations especially with respect to certain countries, of other agencies, particularly the Office of Defense Trade Controls, Department of State (with respect to Arms, Munitions and Implements of War (22 CFR 121-128)); the Office of Export Administration, Department of Commerce (15 CFR 370.10 (j)); the Office of Foreign Assets Control, Department of Treasury (31 CFR Parts 500+) and the Department of Energy.

NOT GRANTED

No license under 35 U.S.C. 184 has been granted at this time, if the phrase "IF REQUIRED, FOREIGN FILING LICENSE GRANTED" DOES NOT appear on this form. Applicant may still petition for a license under 37 CFR 5.12, if a license is desired before the expiration of 6 months from the filing date of the application. If 6 months has lapsed from the filing date of this application and the licensee has not received any indication of a secrecy order under 35 U.S.C. 181, the licensee may foreign file the application pursuant to 37 CFR 5.15(b).

UNITED STATES PATENT AND TRADEMARK OFFICE

Commissioner for Patents
United States Patent and Trademark Office
P.O. Box 1450
Alexandria, VA 22313-1450
www.uspto.gov

PATENT DEPARTMENT – 53051
KILPATRICK STOCKTON LLP
1001 WEST FOURTH STREET
WINSTON-SALEM, NC 27101

MAILED
JUN 0 5 2005
Technology Center 2100

In re Application of:
David AUERBACH, et al.
Application No. 10/813,895
Filed: March 31, 2004
For: METHODS AND SYSTEMS FOR PROCESSING MEDIA FILES

DECISION ON REQUEST TO WITHDRAW AS ATTORNEY OR AGENT

This is a decision on the Request For Withdrawal As Attorney Under 37 CFR § 1.36 and 0.40(c) filed March 10, 2005.

A Revocation And Substitution Of Power Of Attorney Under 37 CFR § 1.36 was filed on April 20, 2005. The Power Of Attorney revoked all prior Powers Of Attorney and appointed Fenwick & West LLP as the attorney(s) of record of the instant application. The Power of Attorney of April 20, 2005 was accepted. Accordingly, all communications from the U.S. Patent and Trademark Office to applicant are to be conducted by Fenwick & West LLP.

For the above stated reasons, the request is **DISMISSED AS MOOT**.

No further communication to you regarding this application will be made.

Vincent N. Trans
Special Program Examiner
Technology Center 2100
Computer Architecture, Software, and
Information Security
571-272-3613

cc: FENWICK & WEST LLP
SILICON VALLEY CENTER
801 CALIFORNIA STREET
MOUNTAIN VIEW, CA 94041

UNITED STATES PATENT AND TRADEMARK OFFICE

UNITED STATES DEPARTMENT OF COMMERCE
United States Patent and Trademark Office
Address: COMMISSIONER FOR PATENTS
P.O. Box 1450
Alexandria, Virginia 22313-1450
www.uspto.gov

BRINKS HOFER GILSON & LIONE
P.O. BOX 10395
CHICAGO, IL 60610

Mail Date: 04/21/2010

Applicant	: Darin Schaeffer	: DECISION ON REQUEST FOR
Patent Number	: 7578840	: RECALCULATION of PATENT
Issue Date	: 08/25/2009	: TERM ADJUSTMENT IN VIEW
Appliction No	: 10/813,903	: OF WYETH AND NOTICE OF INTENT TO
Filed	: 03/31/2004	: ISSUE CERTIFICATE OF CORRECTION
		:

The Request for Recalculation is **GRANTED** to the extent indicated.

The patent term adjustment has been determined to be **1103** days. The USPTO will *sua sponte* issue a certificate of correction reflecting the amount of PTA days determined by the recalculation.

Prior to the issuance of the certificate of correction, the USPTO will afford patentee an opportunity to be heard and request reconsideration. Accordingly, patentee has **one month or thirty (30) days**, whichever is longer, to file a request for reconsideration of this patent term adjustment calculation. See 35 U.S.C. 154(b)(3)(B)(ii) and 37 CFR 1.322(a)(4). No extensions of time will be granted under 37 CFR 1.136.

Patentee should use document code PET.OP if electronically filing a request for reconsideration of this patent term adjustment calculation. The patentee must also include the information required by 37 CFR 1.705(b)(2) and the fee required by 37 CFR 1.18(e). If patentee does not file a timely request for reconsideration of this patent term adjustment calculation including the information required by 37 CFR 1.705(b)(2) and the fee required by 37 CFR 1.18(e), the USPTO will issue a certificate of correction reflecting the PTA determination noted above.

Patentee should be aware that in order to preserve the right to review in the United States District Court for the District of Columbia of the USPTO patent term adjustment determination, patentee must ensure that he or she also take the steps required under 35 U.S.C. 154(b)(4)(A) in a timely manner. Nothing in the request for recalculation should be construed as providing an alternative time frame for commencing a civil action under 35 U.S.C. 154(b)(4)(A).

Any questions concerning this decision should be directed to the Office of Patent Legal Administration at 571-272-7702.

UNITED STATES PATENT AND TRADEMARK OFFICE

UNITED STATES DEPARTMENT OF COMMERCE
United States Patent and Trademark Office
Address: COMMISSIONER FOR PATENTS
P.O. Box 1450
Alexandria, Virginia 22313-1450
www.uspto.gov

PHILIP S. JOHNSON
JOHNSON & JOHNSON
ONE JOHNSON & JOHNSON PLAZA
NEW BRUNSWICK, NJ 08933-7003

Mail Date: 04/20/2010

Applicant	: Iain H. Kalfas	: DECISION ON REQUEST FOR
Patent Number	: 7645294	: RECALCULATION of PATENT
Issue Date	: 01/12/2010	: TERM ADJUSTMENT IN VIEW
Appliction No	: 10/813,904	: OF WYETH AND NOTICE OF INTENT TO
Filed	: 03/31/2004	: ISSUE CERTIFICATE OF CORRECTION
		:

The Request for Recalculation is **GRANTED** to the extent indicated.

The patent term adjustment has been determined to be **655** days. The USPTO will *sua sponte* issue a certificate of correction reflecting the amount of PTA days determined by the recalculation.

Prior to the issuance of the certificate of correction, the USPTO will afford patentee an opportunity to be heard and request reconsideration. Accordingly, patentee has **one month or thirty (30) days**, whichever is longer, to file a request for reconsideration of this patent term adjustment calculation. See 35 U.S.C. 154(b)(3)(B)(ii) and 37 CFR 1.322(a)(4). No extensions of time will be granted under 37 CFR 1.136.

Patentee should use document code PET.OP if electronically filing a request for reconsideration of this patent term adjustment calculation. The patentee must also include the information required by 37 CFR 1.705(b)(2) and the fee required by 37 CFR 1.18(e). If patentee does not file a timely request for reconsideration of this patent term adjustment calculation including the information required by 37 CFR 1.705(b)(2) and the fee required by 37 CFR 1.18(e), the USPTO will issue a certificate of correction reflecting the PTA determination noted above.

Patentee should be aware that in order to preserve the right to review in the United States District Court for the District of Columbia of the USPTO patent term adjustment determination, patentee must ensure that he or she also take the steps required under 35 U.S.C. 154(b)(4)(A) in a timely manner. Nothing in the request for recalculation should be construed as providing an alternative time frame for commencing a civil action under 35 U.S.C. 154(b)(4)(A).

Any questions concerning this decision should be directed to the Office of Patent Legal Administration at 571-272-7702.

UNITED STATES PATENT AND TRADEMARK OFFICE

UNITED STATES DEPARTMENT OF COMMERCE
United States Patent and Trademark Office
Address: COMMISSIONER FOR PATENTS
P.O. Box 1450
Alexandria, Virginia 22313-1450
www.uspto.gov

PHILIP S. JOHNSON
JOHNSON & JOHNSON
ONE JOHNSON & JOHNSON PLAZA
NEW BRUNSWICK, NJ 08933-7003

Mail Date: 05/17/2010

Applicant : Iain H. Kalfas
Patent Number : 7645294
Issue Date : 01/12/2010
Application No : 10/813,904
Filed : 03/31/2004

: NOTICE CONCERNING IMPROPER
: CALCULATION OF PATENT TERM
: ADJUSTMENT BASED UPON USPTO
: IMPROPERLY MEASURING REDUCTION
: PERIOD UNDER 37 CFR 1.704(c)(10).

The United States Patent and Trademark Office (USPTO) discovered that in processing the recent recalculation decisions mailed in response to patentee's filed Request for Recalculation of Patent Term Adjustment in view of Wyeth, the USPTO improperly measured the reduction period for reductions under 37 CFR 1.704(c)(10). Pursuant to 37 CFR 1.704(c)(10), patentee's reduction begins on the date of filing the amendment under 37 CFR 1.312 ("1.312 amendment") or other related paper and ends on the date that the Office mails a response to the filing of the 1.312 amendment or other paper. It has been discovered that during the recalculation, the calculation failed to the limit the reduction to the mail date of the response to the 1.312 amendment or other paper. Accordingly, patentee's reductions were greater than warranted.

This notice **VACATES** the previous GRANTED request for recalculation and provides patentee with a revised GRANTED recalculation.

The patent term adjustment has been determined to be **760** days. The USPTO will *sua sponte* issue a certificate of correction reflecting the amount of patent term adjustment (PTA) days determined by the recalculation.

Prior to the issuance of the certificate of correction, the USPTO will afford patentee an opportunity to be heard and request reconsideration. Accordingly, patentee has **one month or thirty (30) days** from the mail date of this notice, whichever is longer, to file a request for reconsideration of this PTA calculation. See 35 U.S.C. § 154(b)(3)(B)(ii) and 37 CFR 1.322(a)(4).

Patentee should use document code PET.OP if electronically filing a request for reconsideration of this PTA calculation. The patentee must also include the information required by 37 CFR 1.705(b)(2), and the fee required by 37 CFR 1.18(e). If patentee does not file a timely request for reconsideration of this PTA calculation, including the information required by 37 CFR 1.705(b)(2) and the fee required by 37 CFR 1.18(e), the USPTO will issue a certificate of correction reflecting the PTA determination noted above.

Patentee should be aware that in order to preserve the right of review of the USPTO's PTA determination in the United States District Court for the District of Columbia, patentee must ensure that the steps required under 35 U.S.C. § 154 (b)(4) are taken in a timely manner. Nothing in the request for recalculation should be construed as providing an alternative time frame for commencing a civil action under 35 U.S.C. § 154(b)(4).

UNITED STATES PATENT AND TRADEMARK OFFICE

Commissioner for Patents
United States Patent and Trademark Office
P.O. Box 1450
Alexandria, VA 22313-1450
www.uspto.gov

JUN 2 2005

TAFT, STETTINIUS & HOLLISTER LLP
425 Walnut Street
Suite 1800
Cincinnati, OH 45202-3957

In re application of Robert Michael Kalthoff et al. Application No. 10/813,918 Filed: March 31, 2004 For: SECURE NETWORK GATEWAY FOR ACCESSIBLE PATIENT DATA AND TRANSPLANT DONOR DATA	: : : :	**DECISION ON PETITION TO MAKE SPECIAL (ACCELERATED EXAMINATION)**

This is in response to the petition filed on May 09, 2005 to make the above-identified application special on the basis of special examining procedure for certain new applications - accelerated examination as set forth in MPEP § 708.02 VIII.

The requirements for granting special status under this section are: (A) a petition to make special accompanied by the fee set forth in 37 CFR 1.17(i); (B) all claims being directed to a single invention, or an election without traverse if the Office determines that all the claims are not directed to a single invention; (C) a statement that a pre-examination search was made listing the field of search; (D) one copy of each of the references deemed most closely related to the subject matter encompassed by the claims if said references are not already of record; and (E) a detailed discussion of how the claimed subject matter is patentable over the references in accordance with 37 CFR 1.111 (b) and (c).

Since all of the requirements for special status under MPEP § 708.02 VIII have been met, the petition is **GRANTED**.

The examiner is directed (1) to make an interference search for possible interfering applications, (2) to promptly examine this application out of turn, and (3) if any interfering application is discovered, to examine such application simultaneously and state in the first official letter of such application that it is being taken out of turn because of a possible interference.

Petitioner is advised that this application will continue to be special, throughout its entire prosecution and pendency, including interference or appeal, if any, only if petitioner makes a prompt ***bona fide*** effort, in response to each Office action, to place the application in condition for allowance, even if it is necessary to conduct an interview with the examiner to accomplish this purpose.

SUMMARY: Petition to Make Special **GRANTED.**

Kenneth J. Dorner
Special Programs Examiner
Technology Center 3600
(571) 272-6587

KJD/pav: 05/31/05

UNITED STATES PATENT AND TRADEMARK OFFICE

Commissioner for Patents
United States Patent and Trademark Office
P.O. Box 1450
Alexandria, VA 22313-1450
www.uspto.gov

Christopher W. Johnson
823 County Road 447
Fort Payne AL 35968

COPY MAILED

JUN 16 2005

OFFICE OF PETITIONS

In re Application of :
Christopher W. Johnson :
Application No. 10/813,933 : ON PETITION
Filed: December 14, 2004 :
Title: METHOD FOR PROVIDING A :
HANDS FREE DEVICE TO UNROLL TWO :
ROLLS OF BARBED WIRE :

This is in response to the petition under 37 CFR 1.183, filed February 24, 2005, to waive the requirement to pay additional fees in response to the Notice to File Missing Parts.

Unfortunately, petitioner did not pay the requisite fee of $400.00 for the petition under 37 CFR 1.183. The rules and statutory provisions governing the operations of the Office require payment of a fee upon filing a petition. Additionally, petitioner failed to sign the present petition as required under 37 CFR 1.4.

The petition under 37 CFR 1.183 will not be treated on its merits, but rather will remain in the file until the Office receives a renewed petition under 37 CFR 1.183 signed by Mr. Johnson, as well as the $400.00 petition fee.

Petitioner must file both a renewed petition and pay the $400.00 petition fee within **TWO (2) MONTHS** of this decision. No extensions of time are permissible.

Further correspondence with respect to this matter should be addressed as follows and **to the attention of Senior Petitions Attorney Christina Tartera Donnell**:

By mail: Mail Stop Petition
Commissioner for Patents

P.O. Box 1450
Alexandria, VA 22313-1450

By FAX: (703) 872-9306
Attn: Office of Petitions

By hand: Customer Service Window
Randolph Building
401 Dulany Street
Alexandria, VA 22314

Telephone inquiries related to this decision may be directed to the undersigned at (571) 272-3211.

Christina Tartera Donnell

Christina Tartera Donnell
Senior Petitions Attorney
Office of Petitions

UNITED STATES PATENT AND TRADEMARK OFFICE

Commissioner for Patents
United States Patent and Trademark Office
P.O. Box 1450
Alexandria, VA 22313-1450
www.uspto.gov

ROBERT D. ATKINS
605 W. KNOX ROAD, SUITE 104
TEMPE AZ 85284

MAILED

MAY 26 2009

OFFICE OF PETITIONS

In re Application of

CHAMBERS, David E.
Application No. 10/813,944
Filed: March 30, 2004
Attorney Docket No. **2270.0003**

DECISION ON PETITION
TO WITHDRAW
FROM RECORD

This is a decision on the Request to Withdraw as attorney or agent of record under 37 C.F.R. § 1.36(b), filed April 22, 2009.

The request is **APPROVED**.

A grantable request to withdraw as attorney/agent of record must be signed by every attorney/agent seeking to withdraw or contain a clear indication that one attorney is signing on behalf of another/others. The Office requires the practitioner(s) requesting withdrawal to certify that he, she, or they have: (1) given reasonable notice to the client, prior to the expiration of the response period, that the practitioner(s) intends to withdraw from employment; (2) delivered to the client or a duly authorized representative of the client all papers and property (including funds) to which the client is entitled; and (3) notified the client of any responses that may be due and the time frame within which the client must respond, pursuant 37 CFR 10.40(c).

The request was signed by Robert Atkins, the sole attorney of record. Robert Atkins has been withdrawn as attorneys or agents of record. Applicant is reminded that there is no attorney of record at this time.

All future correspondence will be directed to the inventor David Chambers at the address indicated below.

Telephone inquiries concerning this decision should be directed to Tredelle Jackson at 571-272-2783.

Tredelle D. Jackson
Paralegal Specialist
Office of Petitions

cc: **DAVID E. CHAMBERS**
103 BARGASTE TRAIL
KILLINGWORTH CT 06419

SPE RESPONSE FOR CERTIFICATE OF CORRECTION

Paper No.:20100120

DATE : January 20, 2010

TO SPE OF : ART UNIT 2839

SUBJECT : Request for Certificate of Correction on Patent No.: 6,974,333

A response is requested with respect to the accompanying request for a certificate of correction.

Please complete this form and return with file, within **7** days to:
Certificates of Correction Branch - ST (South Tower) 9A22
Palm location **7590** - Tel. No. (703) 305-8309

With respect to the change(s) requested, correcting Office and/or Applicant's errors, should the patent read as shown in the certificate of correction? No new matter should be introduced, nor should the scope or meaning of the claims be changed.

Thank You For Your Assistance **Certificates of Correction Branch**

The request for issuing the above-identified correction(s) is hereby:

Note your decision on the appropriated box.

☒ **Approved** All changes apply.

☐ **Approved in Part** Specify below which changes **do not** apply.

☐ **Denied** State the reasons for denial below.

Comments:

Changes are acceptable, (printing error being corrected).

/T C Patel/
Supervisory Patent Examiner.Art Unit 2839

UNITED STATES PATENT AND TRADEMARK OFFICE

Commissioner for Patents
United States Patent and Trademark Office
P.O. Box 1450
Alexandria, VA 22313-1450
www.uspto.gov

COPY MAILED

JUL 0 2 2008

OFFICE OF PETITIONS

MICROSOFT CORPORATION
ONE MICROSOFT WAY
REDMOND WA 98052-6399

In re Application of	:	
Surajit Chaudhuri et al	:	
Application No. 10/813,963	:	DECISION GRANTING PETITION
Filed: March 31, 2004	:	UNDER 37 CFR 1.313(c)(2)
Attorney Docket No. 307523.01	:	

This is a decision on the petition under 37 CFR 1.313(c)(2), filed June 30, 2008, to withdraw the above-identified application from issue after payment of the issue fee.

The petition is **GRANTED**.

The above-identified application is withdrawn from issue for consideration of a submission under 37 CFR 1.114 (request for continued examination). *See* 37 CFR 1.313(c)(2).

Petitioner is advised that the issue fee paid on June 12, 2008 cannot be refunded. If, however, this application is again allowed, petitioner may request that it be applied towards the issue fee required by the new Notice of Allowance.[1]

Telephone inquiries should be directed to the undersigned at (571) 272-3208.

This application is being referred to Technology Center AU 2165 for processing of the request for continued examination under 37 CFR 1.114 and for consideration of the concurrently filed amendment.

Karen Creasy
Petitions Examiner
Office of Petitions

[1] *The request to apply the issue fee to the new Notice may be satisfied by completing and returning the new Part B – Fee(s) Transmittal Form (along with any balance due at the time of submission). Petitioner is advised that the Issue Fee Transmittal Form* ***must*** *be completed and timely submitted to avoid abandonment of the application.*

O I P E JC68
OCT 0 4 2004
PATENT & TRADEMARK OFFICE

IFW

IN THE UNITED STATES PATENT AND TRADEMARK OFFICE

In re Application No. 10/813,970	)	
	)	Group Art Unit 1732
Filed: March 31, 2004	)	
	)	Examiner: COLAIANNI, M
Applicants: Paul Philip BROWN et al.	)	
	)	Attorney Dkt. No. 155-21
For: INJECTION MOLDING OF TUBULAR PLASTIC PRODUCTS	)	
	)	Confirmation No. 5922

Commissioner for Patents
P.O. Box 1450
Alexandria, VA 22313-1450

PETITION TO MAKE SPECIAL BASED UPON APPLICANT'S AGE

Applicants petition that the above-identified application be granted special status for accelerated examination in accordance with 37 CFR 1.102(c) and MPEP Sec. 708.02, part IV.

Co-Applicant Jens Ole Sorensen became 65 years of age on May 11, 2004. His Declaration stating his age and his date and place of birth is attached hereto.

No petition fee is required for a petition to make special based upon an applicant's age.

Respectfully submitted,

Dated 9-29-04

Edward W. Callan

Edward W. Callan
Attorney for Applicants
Attorney Registration No. 24,720

Customer No. 22653
3830 Valley Centre Drive, No. 705, PMB 452
San Diego, California 92130

Telephone: (858) 259-5533
Facsimile: (858) 259-5537
Email: ecallan1@san.rr.com

PETITION GRANTED

R Crispino

Richard Crispino
Special Program Examiner
TC 1700

12/29/04

UNITED STATES PATENT AND TRADEMARK OFFICE

Commissioner for Patents
United States Patent and Trademark Office
P.O. Box 1450
Alexandria, VA 22313-1450
www.uspto.gov

RATNERPRESTIA
P O BOX 980
VALLEY FORGE, PA 19482-0980

COPY MAILED

SEP 0 1 2004

OFFICE OF PETITIONS

In re Application of	:	
Saimani Sundar et al	:	
Application No. 10/813,972	:	NOTICE
Filed: March 31, 2004	:	
Attorney Docket No. KUM-110US	:	

This is a notice regarding your request for acceptance of a fee deficiency submission under 37 CFR 1.28. On September 1, 1998, the Court of Appeals for the Federal Circuit held that 37 CFR 1.28(c) is the sole provision governing the time for correction of the erroneous payment of the issue fee as a small entity. **See DH Technology v. Synergystex International, Inc. 154 F.3d 1333, 47 USPQ2d 1865 (Fed. Cir. Sept. 1, 1998).**

The Office no longer investigates or rejects original or reissue applications under 37 CFR 1.56. **1098 Off. Gaz. Pat. Office 502 (January 3, 1989)**. Therefore, nothing in this Notice is intended to imply that an investigation was done.

Your fee deficiency submission under 37 CFR 1.28 is hereby **ACCEPTED**.

Inquiries related to this communication should be directed to the Office of Petitions Staff at (703) 305-9285.

This matter is being referred to the Office of Initial Patent Examination.

Wan Laymon
Petitions Examiner
Office of Petitions
Office of the Deputy Commissioner
for Patent Examination Policy

UNITED STATES PATENT AND TRADEMARK OFFICE

Commissioner for Patents
United States Patent and Trademark Office
P.O. Box 1450
Alexandria, VA 22313-1450
www.uspto.gov

COPY MAILED

JUL 2 1 2008

OFFICE OF PETITIONS

HELLER EHRMAN LLP
4350 LA JOLLA VILLAGE DRIVE, 7TH FLOOR
SAN DIEGO, CA 92122

In re Application of

KNOWLTON, Edward W.
Application No. 10/813,980
Filed: March 31, 2004
Attorney Docket No. **1000-010**

DECISION ON PETITION TO WITHDRAW FROM RECORD

This is a decision on the Request to Withdraw as attorney or agent of record under 37 C.F.R. § 1.36(b), filed July 08, 2008.

The request is **APPROVED**.

A grantable request to withdraw as attorney/agent of record must be signed by every attorney/agent seeking to withdraw or contain a clear indication that one attorney is signing on behalf of another/others. A request to withdraw will not be approved unless at least 30 (thirty) days would remain between the date of approval and the later of the expiration date of a time to file a response or the expiration date of the maximum time period which can be extended under 37 C.F.R. § 1.136(a).

The request was signed by Leslie B. Overman on behalf of all attorneys of record who are associated with customer No. 25213. All attorneys/agents associated have been withdrawn. Applicant is reminded that there is no attorney of record at this time.

The request to change the correspondence address of record is not acceptable as the requested correspondence address is not that of: (1) the first named signing inventor; or (2) an intervening assignee of the entire interest under 37 C.F.R 3.71. All future communications from the Office will be directed to the first named signing inventor.

There is an outstanding Office action mailed June 30, 2008 that requires a reply from the applicant.

Telephone inquiries concerning this decision should be directed to Michelle R. Eason at 571-272-4231.

Michelle R. Eason
Paralegal Specialist
Office of Petitions

cc: **EDWARD WELLS KNOWLTON**
P.O. BOX 10423
ZEPHYR COVE, NEVADA 89448

cc: **GOODWIN PROCTER LLP**
ATTN: PATENT ADMINISTRATOR
135 COMMONWEALTH DRIVE
MENLO PARK, CA 94025-1105

UNITED STATES PATENT AND TRADEMARK OFFICE

COMMISSIONER FOR PATENTS
UNITED STATES PATENT AND TRADEMARK OFFICE
P.O. BOX 1450
ALEXANDRIA, VA 22313-1450
www.uspto.gov

COPY MAILED

NOV 09 2007

OFFICE OF PETITIONS

LATHROP & GAGE LC
4845 PEARL EAST CIRCLE
SUITE 300
BOULDER CO 80301

In re Application of :
Edward Raymond Dowski, Jr., et al :
Application No. 10/813,993 : NOTICE
Filed: March 31, 2004 :
Attorney Docket No. 420229 :

This is a notice regarding your request for acceptance of a fee deficiency submission under 37 CFR 1.28. On September 1, 1998, the Court of Appeals for the Federal Circuit held that 37 CFR 1.28(c) is the sole provision governing the time for correction of the erroneous payment of the issue fee as a small entity. **See DH Technology v. Synergystex International, Inc. 154 F.3d 1333, 47 USPQ2d 1865 (Fed. Cir. Sept. 1, 1998).**

The Office no longer investigates or rejects original or reissue applications under 37 CFR 1.56. **1098 Off. Gaz. Pat. Office 502 (January 3, 1989).** Therefore, nothing in this Notice is intended to imply that an investigation was done.

Your fee deficiency submission under 37 CFR 1.28 is hereby **ACCEPTED**.

This application is no longer entitled to small entity status. Accordingly, all future fees paid in this application must be paid at the large entity rate.

Inquiries related to this communication should be directed to the undersigned at (571)272-3213.

Cheryl Gibson-Baylor
Petitions Examiner
Office of Petitions

Irvin Dingle
Petitions Examiner

SPE RESPONSE FOR CERTIFICATE OF CORRECTION

Paper No.: _____

DATE : 07/21/09

TO SPE OF : ART UNIT 2854

SUBJECT : Request for Certificate of Correction for Appl. No.: 10814004 Patent No.: 7055427 B2

Please respond to this request for a certificate of correction within 7 days.

FOR IFW FILES:

Please review the requested changes/corrections as shown in the **COCIN** document(s) in the IFW application image. No new matter should be introduced, nor should the scope or meaning of the claims be changed.

Please complete the response (see below) and forward the completed response to scanning using document code **COCX**.

FOR PAPER FILES:

Please review the requested changes/corrections as shown in the attached certificate of correction. Please complete this form (see below) and forward it with the file to:

Certificates of Correction Branch (C of C)
Randolph Square 9D40-D
Palm Location 7580

You can fax the Directors/SPE response to 571-270-9990

Lamonte Newsome
Certificates of Correction Branch
703-756-1574

Thank You For Your Assistance

The request for issuing the above-identified correction(s) is hereby:
Note your decision on the appropriate box.

☒ **Approved**	**All** changes apply.
☐ **Approved in Part**	Specify below which changes **do not** apply.
☐ **Denied**	State the reasons for denial below.

Comments: The first two corrections are a result of a patent office error and should be corrected. The third correction is due to applicant's error (so perhaps a fee should be charged?) but is an obvious typographical error and should also be corrected.

-Dan

Judy Nguyen
JUDY NGUYEN
SUPERVISORY PATENT EXAMINER

UNITED STATES PATENT AND TRADEMARK OFFICE

Commissioner for Patents
United States Patent and Trademark Office
P.O. Box 1450
Alexandria, VA 22313-1450
www.uspto.gov

CHEVRON CORPORATION
P.O. BOX 6006
SAN RAMON CA 94583-0806

COPY MAILED

NOV 30 2007

OFFICE OF PETITIONS

In re Application of :
STREMLER et al. :
Application No. 10/814,005 : DECISION ON PETITION
Filed: 03/30/2004 :
Attorney Docket No. T-6309 :

This is a decision on the petition under the unintentional provisions of 37 CFR 1.137(b), filed August 2, 2007, to revive the above-identified application.

The petition is **GRANTED**.

The application became abandoned for failure to reply in a timely manner to the non-final Office action, mailed July 27, 2006, which set a shortened statutory period for reply of three (3) months. No extensions of time under the provisions of 37 CFR 1.136(a) were obtained. Accordingly, the application became abandoned on October 28, 2006. A Notice of Abandonment was mailed on June 5, 2007.

The petition satisfies the requirements of 37 CFR 1.137(b) in that petitioner has supplied (1) the reply in the form of an amendment, (2) the petition fee, and (3) a proper statement of unintentional delay.

The $1,500.00 petition fee will be charged to the Deposit Account as authorized.

Telephone inquiries concerning this decision should be directed to the undersigned at (571) 272-3211.

This application is being referred to Technology Center AU 2128 for appropriate action by the Examiner in the normal course of business on the reply received August 2, 2007.

Christina Tartera Donnell

Christina Tartera Donnell
Senior Petitions Attorney
Office of Petitions

UNITED STATES PATENT AND TRADEMARK OFFICE

Commissioner for Patents
United States Patent and Trademark Office
P.O. Box 1450
Alexandria, VA 22313-1450
www.uspto.gov

HOWREY SIMON ARNOLD & WHITE, LLP
C/O M.P. DROSOS, DIRECTOR OF IP ADMINISTRATION
2941 FAIRVIEW PK
BOX 7
FALLS CHURCH VA 22042

COPY MAILED

NOV 0 2 2004

OFFICE OF PETITIONS

In re Application of	:
Boyer, et al.	: DECISION GRANTING
Application No. 10/814,007	: PETITION
Filed: March 30, 2004	:
Attorney Docket No. 03678.0064.CPUS02	:
For: COMPOSITION AND METHOD FOR INHIBITING PLATELET AGGREGATION	

This is a decision on the petition for correcting filing date, filed August 18, 2004, requesting that the above-identified application be accorded a filing date of March 30, 2004 rather than the presently accorded filing date of March 31, 2004. The petition will be treated under 37 CFR 1.10(c)

Petitioners request the earlier filing date on the basis that the application was deposited in Express Mail service of the United States Postal Service (USPS) on March 30, 2004, pursuant to the requirements of 37 CFR 1.10. The petition is accompanied by a copy of Express Mail label no. EV430417944US showing no "date-in"**and** a USPS date stamp of MAR 30 2004. The same Express Mail label number is listed on the original transmittal letter found in the application file.

The evidence presented establishes that the Express Mail package associated with Express Mail label no. EV430417944US was deposited with the USPS on March 30, 2004.

Accordingly, the petition is granted.

No fee has been or will be charged in connection with this petition.

The application is being returned to the Office of Initial Patent Examination for correction of the filing date to **March 30, 2004**.

Any inquiries related to this decision should be directed to the undersigned at (571) 272-3230.

E. Shirene Willis
Petitions Attorney
Office of Petitions

UNITED STATES PATENT AND TRADEMARK OFFICE

UNITED STATES DEPARTMENT OF COMMERCE
United States Patent and Trademark Office
Address: COMMISSIONER FOR PATENTS
P.O. Box 1450
Alexandria, Virginia 22313-1450
www.uspto.gov

APPL NO.	FILING OR 371 (c) DATE	ART UNIT	FIL FEE REC'D	ATTY.DOCKET NO	DRAWINGS	TOT CLMS	IND CLMS
10/814,007	03/30/2004	1623	450	03678.0064.CPUS02	11	20	2

CONFIRMATION NO. 6051

CORRECTED FILING RECEIPT

OC000000014268969

27194
HOWREY SIMON ARNOLD & WHITE, LLP
C/O M.P. DROSOS, DIRECTOR OF IP ADMINISTRATION
2941 FAIRVIEW PK
BOX 7
FALLS CHURCH, VA 22042

Date Mailed: 11/03/2004

Receipt is acknowledged of this regular Patent Application. It will be considered in its order and you will be notified as to the results of the examination. Be sure to provide the U.S. APPLICATION NUMBER, FILING DATE, NAME OF APPLICANT, and TITLE OF INVENTION when inquiring about this application. Fees transmitted by check or draft are subject to collection. Please verify the accuracy of the data presented on this receipt. **If an error is noted on this Filing Receipt, please write to the Office of Initial Patent Examination's Filing Receipt Corrections, facsimile number 703-746-9195. Please provide a copy of this Filing Receipt with the changes noted thereon. If you received a "Notice to File Missing Parts" for this application, please submit any corrections to this Filing Receipt with your reply to the Notice. When the USPTO processes the reply to the Notice, the USPTO will generate another Filing Receipt incorporating the requested corrections (if appropriate).**

Applicant(s)

Jose L. Boyer, Chapel Hill, NC;
James G. Douglass III, Apex, NC;
Sammy R. Shaver, Chapel Hill, NC;
Krzysztof Bednarski, Raleigh, NC;
Benjamin R. Yerxa, Raleigh, NC;
Gillian M. Olins, San Diego, CA;

Power of Attorney:

James Davis–21072
William West JR.–22057
Joel Freed–25101
Albert Halluin–25227
Alan Grimaldi–26599
Mark Montgomery–30780
Chris Comuntzis–31097
W. R. Duke Taylor–31306
Glenn Rhodes–31790
Don Livornese–32040

Domestic Priority data as claimed by applicant

This application is a CIP of 09/934,970 08/21/2001
which is a CIP of 09/643,138 08/21/2000

Foreign Applications

UNITED STATES OF AMERICA PCT/US01/41818 08/20/2001

If Required, Foreign Filing License Granted: 06/11/2004

The country code and number of your priority application, to be used for filing abroad under the Paris Convention, is US10/814,007

Projected Publication Date: 11/04/2004

Non-Publication Request: No

Early Publication Request: No

**** SMALL ENTITY ****

Title

Composition and method for inhibiting platelet aggregation

Preliminary Class

514

LICENSE FOR FOREIGN FILING UNDER
Title 35, United States Code, Section 184
Title 37, Code of Federal Regulations, 5.11 & 5.15

GRANTED

The applicant has been granted a license under 35 U.S.C. 184, if the phrase "IF REQUIRED, FOREIGN FILING LICENSE GRANTED" followed by a date appears on this form. Such licenses are issued in all applications where the conditions for issuance of a license have been met, regardless of whether or not a license may be required as set forth in 37 CFR 5.15. The scope and limitations of this license are set forth in 37 CFR 5.15(a) unless an earlier license has been issued under 37 CFR 5.15(b). The license is subject to revocation upon written notification. The date indicated is the effective date of the license, unless an earlier license of similar scope has been granted under 37 CFR 5.13 or 5.14.

This license is to be retained by the licensee and may be used at any time on or after the effective date thereof unless it is revoked. This license is automatically transferred to any related applications(s) filed under 37 CFR 1.53(d). This license is not retroactive.

The grant of a license does not in any way lessen the responsibility of a licensee for the security of the subject matter as imposed by any Government contract or the provisions of existing laws relating to espionage and the national security or the export of technical data. Licensees should apprise themselves of current regulations especially with respect to certain countries, of other agencies, particularly the Office of Defense Trade Controls, Department of State (with respect to Arms, Munitions and Implements of War (22 CFR 121-128)); the Office of Export Administration, Department of Commerce (15 CFR 370.10 (j)); the Office of Foreign Assets Control, Department of Treasury (31 CFR Parts 500+) and the Department of Energy.

NOT GRANTED

No license under 35 U.S.C. 184 has been granted at this time, if the phrase "IF REQUIRED, FOREIGN FILING LICENSE GRANTED" DOES NOT appear on this form. Applicant may still petition for a license under 37 CFR 5.12, if a license is desired before the expiration of 6 months from the filing date of the application. If 6 months has lapsed from the filing date of this application and the licensee has not received any indication of a secrecy order under 35 U.S.C. 181, the licensee may foreign file the application pursuant to 37 CFR 5.15(b).

UNITED STATES PATENT AND TRADEMARK OFFICE

COMMISSIONER FOR PATENTS
UNITED STATES PATENT AND TRADEMARK OFFICE
P.O. BOX 1450
ALEXANDRIA, VA 22313-1450
www.uspto.gov

GENZYME CORPORATION
LEGAL DEPARTMENT
15 PLEASANT ST CONNECTOR
FRAMINGHAM, MA 01701-9322

COPY MAILED

APR 0 5 2007

OFFICE OF PETITIONS

In re Application of :
James Rasmussen, et al. :
Application No. 10/814,025 : ON PETITION
Filed: March 31, 2004 :
Attorney Docket No. GC22.4-CON2 :

This is a decision on the petition under 37 CFR 1.137(b), filed November 17, 2006, to revive the above-identified application.

The petition is **GRANTED**.

The application became abandoned for failure to timely file a reply within the meaning of 37 CFR 1.113 to the final Office action of January 19, 2006. A Notice of Abandonment was mailed on September 28, 2006. In response, on November 17, 2006, the present petition was filed.

There is no indication that the person signing the instant petition was ever given a power of attorney or authorization of agent to prosecute the above-identified application. However, in accordance with 37 CFR 1.34(a), the signature of Madge R. Kanter appearing on the petition shall constitute a representation to the United States Patent and Trademark Office that she is authorized to represent the particular party on whose behalf she acts. A courtesy copy of this decision is being mailed to petitioner. However, if Ms. Kanter desires to receive future correspondence regarding this application, the appropriate power of attorney or authorization of agent must be submitted. Until otherwise instructed, all future correspondence regarding this application will be directed solely to the address of record.

The petition satisfies the requirements of 37 CFR 1.137(b) in that petitioner has supplied (1) the reply in the form of a Request for Continued Examination (RCE) and fee of $790, and the submission required by 37 CFR 1.114; (2) the petition fee of $1,500; and (3) an adequate statement of unintentional delay.

This application is being referred to Technology Center AU 1636 for processing of the RCE and for appropriate action by the Examiner in the normal course of business on the amendment submitted in accordance with 37 CFR 1.114.

Telephone inquiries concerning this decision should be directed to the undersigned at (571) 272-3204. Inquiries relating to further prosecution should be directed to the Technology Center.

Sherry D. Brinkley
Petitions Examiner
Office of Petitions

cc: MADGE KANTER
GENZYME CORPORATION
500 KENDALL STREET
CAMBRIDGE, MA 02142

UNITED STATES PATENT AND TRADEMARK OFFICE

UNITED STATES DEPARTMENT OF COMMERCE
United States Patent and Trademark Office
Address: COMMISSIONER FOR PATENTS
P.O. Box 1450
Alexandria, Virginia 22313-1450
www.uspto.gov

LeMOINE PATENT SERVICES, PLLC
C/O CPA GLOBAL
P. O. BOX 52050
MINNEAPOLIS, MN 55402

Mail Date: 04/21/2010

Applicant	: Richard A. Forand	: DECISION ON REQUEST FOR
Patent Number	: 7590101	: RECALCULATION of PATENT
Issue Date	: 09/15/2009	: TERM ADJUSTMENT IN VIEW
Appliction No	: 10/814,047	: OF WYETH AND NOTICE OF INTENT TO
Filed	: 03/31/2004	: ISSUE CERTIFICATE OF CORRECTION
		:

The Request for Recalculation is **GRANTED** to the extent indicated.

The patent term adjustment has been determined to be **1562** days. The USPTO will *sua sponte* issue a certificate of correction reflecting the amount of PTA days determined by the recalculation.

Prior to the issuance of the certificate of correction, the USPTO will afford patentee an opportunity to be heard and request reconsideration. Accordingly, patentee has **one month or thirty (30) days**, whichever is longer, to file a request for reconsideration of this patent term adjustment calculation. See 35 U.S.C. 154(b)(3)(B)(ii) and 37 CFR 1.322(a)(4). No extensions of time will be granted under 37 CFR 1.136.

Patentee should use document code PET.OP if electronically filing a request for reconsideration of this patent term adjustment calculation. The patentee must also include the information required by 37 CFR 1.705(b)(2) and the fee required by 37 CFR 1.18(e). If patentee does not file a timely request for reconsideration of this patent term adjustment calculation including the information required by 37 CFR 1.705(b)(2) and the fee required by 37 CFR 1.18(e), the USPTO will issue a certificate of correction reflecting the PTA determination noted above.

Patentee should be aware that in order to preserve the right to review in the United States District Court for the District of Columbia of the USPTO patent term adjustment determination, patentee must ensure that he or she also take the steps required under 35 U.S.C. 154(b)(4)(A) in a timely manner. Nothing in the request for recalculation should be construed as providing an alternative time frame for commencing a civil action under 35 U.S.C. 154(b)(4)(A).

Any questions concerning this decision should be directed to the Office of Patent Legal Administration at 571-272-7702.

UNITED STATES PATENT AND TRADEMARK OFFICE

Commissioner for Patents
United States Patent and Trademark Office
P.O. Box 1450
Alexandria, VA 22313-1450
www.uspto.gov

John C. Alemanni
PATENT DEPARTMENT-53051
KILPATRICK STOCKTON LLP
1001 West Fourth Street
Winston-Salem, NC 27101

MAILED

SEP 0 9 2005

Technology Center 2100

In re Application of:	)	
David Auerbach et al.	)	
Application No. 10/814,052	)	
Filed: March 31, 2004	)	**DECISION ON REQUEST FOR**
For: SYSTEMS AND METHODS FOR	)	**WITHDRAWAL AS ATTORNEY**
GENERATING A USER INTERFACE	)	
	)	

This is a decision on the Request For Withdrawal As Attorney Under 37 CFR § 1.36 and 10.40(c) filed March 10, 2005.

A Revocation and Substitution Of Power Of Attorney Under 37 CFR § 1.36 was filed on April 25, 2005. The Power Of Attorney revoked all prior Powers Of Attorney and appointed the practitioners of Fenwick & West LLP as the attorneys of record of the instant application. The Power Of Attorney filed April 25, 2005 was accepted. Accordingly, all communications from the U.S. Patent and Trademark Office to applicant are to be conducted by FENWICK & WEST LLP.

For the above stated reasons, the request is **DISMISSED AS MOOT**.

No further communication to you regarding this application will be made.

Michelle R. Eason for

Vincent N. Trans
Special Program Examiner
Technology Center 2100
Computer Architecture, Software, and
Information Security
571-272-3613

UNITED STATES PATENT AND TRADEMARK OFFICE

Commissioner for Patents
United States Patent and Trademark Office
P.O. Box 1450
Alexandria, VA 22313-1450
www.uspto.gov

COPY MAILED

NOV 09 2007

OFFICE OF PETITIONS

GOOGLE / FENWICK
SILICON VALLEY CENTER
801 CALIFORNIA STREET
MOUNTAIN VIEW, CA 94041

In re Application of
David Benjamin Auerbach
Application No. 10/814,052
Filed: March 31, 2004
Attorney Docket No. 24207-10107

DECISION ON PETITION
UNDER 37 CFR 1.137(b)

This is a decision on the petition, filed July 30, 2007, which is being treated as a petition under 37 CFR 1.137(b) to revive the instant nonprovisional application for failure to timely notify the U.S. Patent and Trademark (USPTO) of the filing of an application in a foreign country, or under a multinational treaty that requires publication of applications eighteen months after filing. *See* 37 CFR 1.137(f).

The petition is **GRANTED**.

Petitioner states that the instant nonprovisional application is the subject of an application filed in an eighteen-month publication country on March 30, 2005. However, the USPTO was unintentionally not notified of this filing within 45 days subsequent to the filing of the subject application in an eighteen-month publication country.

In view of the above, this application became abandoned pursuant to 35 U.S.C. § 122(b)(2)(B)(iii) and 37 CFR 1.213(c) for failure to timely notify the Office of the filing of an application in a foreign country or under a multilateral international agreement that requires publication of applications 18 months after filing.

A petition to revive an application abandoned pursuant to 35 U.S.C. 122(b)(2)(B)(iii) for failure to notify the USPTO of a foreign filing must be accompanied by:

(1) the required reply which is met by the notification of such filing in a foreign country or under a multinational treaty;
(2) the petition fee as set forth in 37 CFR 1.17(m); and
(3) a statement that the entire delay in filing the required reply from the due date of the reply until the filing of a grantable petition was unintentional.

The instant petition has been found to be in compliance with 37 CFR 1.137(b). Accordingly, the failure to timely notify the USPTO of a foreign or international filing within 45 days after the date of filing of such foreign or international application as provided by 35 U.S.C. § 122(b)(2)(B)(iii) and 37 CFR 1.213(c) is accepted as having been unintentionally delayed.

The previous Request and Certification under 35 U.S.C. § 122(b)(2)(B)(i) has been rescinded. A Notice Regarding Rescission of Nonpublication Request which sets forth the projected publication date of February 14, 2008 accompanies this decision on petition.

Telephone inquiries concerning this decision should be directed to Irvin Dingle at (571) 272-3210.

This application is being referred to Technology Center Art Unit 2165 for examination in due course.

Irvin Dingle
Petition Examiner
Office of Petitions

ATTACHMENT: Notice Regarding Rescission of Nonpublication Request

UNITED STATES PATENT AND TRADEMARK OFFICE

UNITED STATES DEPARTMENT OF COMMERCE
United States Patent and Trademark Office
Address: COMMISSIONER FOR PATENTS
P.O. Box 1450
Alexandria, Virginia 22313-1450
www.uspto.gov

APPLICATION NUMBER	FILING OR 371(C) DATE	FIRST NAMED APPLICANT	ATTY. DOCKET NO./TITLE
10/814,052	03/31/2004	David Benjamin Auerbach	24207-10107

CONFIRMATION NO. 5716

62296
GOOGLE / FENWICK
SILICON VALLEY CENTER
801 CALIFORNIA ST.
MOUNTAIN VIEW, CA 94041

NONPUBLICATION RESCISSION LETTER

OC000000026678549

Date Mailed: 11/08/2007

Communication Regarding Rescission Of Nonpublication Request and/or Notice of Foreign Filing

Applicant's rescission of the previously-filed nonpublication request and/or notice of foreign filing is acknowledged. The paper has been reflected in the Patent and Trademark Office's (USPTO's) computer records so that the earliest possible projected publication date can be assigned.

The projected publication date is 02/14/2008.

If applicant rescinded the nonpublication request before or on the date of "foreign filing,"[1] then no notice of foreign filing is required.

If applicant foreign filed the application after filing the above application and before filing the rescission, and the rescission did not also include a notice of foreign filing, then a notice of foreign filing (not merely a rescission) is required to be filed within 45 days of the date of foreign filing. See 35 U.S.C. § 122(b)(2)(B)(iii), and Clarification of the United States Patent and Trademark Office's Interpretation of the Provisions of 35 U.S.C. § 122(b)(2)(B)(ii)-(iv), 1272 Off. Gaz. Pat. Office 22 (July 1, 2003).

If a notice of foreign filing is required and is not filed within 45 days of the date of foreign filing, then the application becomes abandoned pursuant to 35 U.S.C. § 122(b)(2)(B)(iii). In this situation, applicant should either file a petition to revive or notify the Office that the application is abandoned. See 37 CFR 1.137(f). Any such petition to revive will be forwarded to the Office of Petitions for a decision. Note that the filing of the petition will not operate to stay any period of reply that may be running against the application.

Questions regarding petitions to revive should be directed to the Office of Petitions at (571) 272-3282. Questions regarding publications of patent applications should be directed to the patent application publication hotline at (703) 605-4283 or by e-mail pgpub@uspto.gov.

[1] Note, for purpose of this notice, that "foreign filing" means "filing an application directed to the same invention in another country, or under a multilateral international agreement, that requires publication of applications 18 months after filing".

UNITED STATES PATENT AND TRADEMARK OFFICE

COMMISSIONER FOR PATENTS
UNITED STATES PATENT AND TRADEMARK OFFICE
P.O. BOX 1450
ALEXANDRIA, VA 22313-1450
www.uspto.gov

Paper No.

John C. Alemanni
Patent Department – 53051
KILPATRICK STOCKTON LLP
1001 West Fourth Street
Winston-Salem, NC 27101

MAILED

JUN 2 5 2005

Technology Center 2100

In re Application of:
Niniane Wang et al.
Application No. 10/814,053
Filed: March 31, 2004
For: SYSTEMS AND METHODS FOR ACCOCIATING A KEYWORD WITH A USER INTERFACE AREA

DECISION ON REQUEST TO WITHDRAW AS ATTORNEY OR AGENT

This is a decision on the Request To Withdraw from Representation Under 37 CFR 1.36 and 10.40(c) filed March 10, 2005.

A Power of Attorney Under 37 CFR 1.36 was filed on April 25, 2005. The Power Of Attorney revoked all prior Powers Of Attorney and appointed FENWICK & WEST LLP as the attorneys of record of the instant application. The Power Of Attorney of April 25, 2005, was accepted. Accordingly, all communications from the U.S. Patent and Trademark Office to applicant are to be conducted by FENWICK & WEST LLP.

For the above stated reasons, the request is **DISMISSED AS MOOT**.

No further communication to you regarding this application will be made.

for James R. Matthews

Vincent N. Trans
Special Program Examiner
Technology Center 2100
Computer Architecture, Software, and
Information Security

cc: Sabra-Anne R. Truesdale
c/o FENWICK & WEST LLP
Silicon Valley Center
801 California Street
Mountain View, CA 94041

UNITED STATES PATENT AND TRADEMARK OFFICE

Commissioner for Patents
United States Patent and Trademark Office
P.O. Box 1450
Alexandria, VA 22313-1450
www.uspto.gov

GOOGLE / FENWICK
SILICON VALLEY CENTER
801 CALIFORNIA ST.
MOUNTAIN VIEW, CA 94041

COPY MAILED

JUL 3 1 2007

OFFICE OF PETITIONS

In re Application of	:	
Niniane Wang et al	:	
Application No. 10/814,053	:	DECISION ON PETITION
Filed: March 31, 2004	:	UNDER 37 CFR 1.137(b)
Attorney Docket No. 24207-10105	:	

This is a decision on the petition, filed June 26, 2007, which is being treated as a petition under 37 CFR 1.137(b) to revive the instant nonprovisional application for failure to timely notify the U.S. Patent and Trademark (USPTO) of the filing of an application in a foreign country, or under a multinational treaty that requires publication of applications eighteen months after filing. *See* 37 CFR 1.137(f).

The petition is **GRANTED**.

Petitioner states that the instant nonprovisional application is the subject of an application filed in an eighteen-month publication country on March 30, 2005. However, the USPTO was unintentionally not notified of this filing within 45 days subsequent to the filing of the subject application in an eighteen-month publication country.

In view of the above, this application became abandoned pursuant to 35 U.S.C. § 122(b)(2)(B)(iii) and 37 CFR 1.213(c) for failure to timely notify the Office of the filing of an application in a foreign country or under a multilateral international agreement that requires publication of applications 18 months after filing.

A petition to revive an application abandoned pursuant to 35 U.S.C. 122(b)(2)(B)(iii) for failure to notify the USPTO of a foreign filing must be accompanied by:

(1) the required reply which is met by the notification of such filing in a foreign country or under a multinational treaty;
(2) the petition fee as set forth in 37 CFR 1.17(m); and
(3) a statement that the entire delay in filing the required reply from the due date of the reply until the filing of a grantable petition was unintentional.

The instant petition has been found to be in compliance with 37 CFR 1.137(b). Accordingly, the failure to timely notify the USPTO of a foreign or international filing within 45 days after the date of filing of such foreign or international application as provided by 35 U.S.C. § 122(b)(2)(B)(iii) and 37 CFR 1.213(c) is accepted as having been unintentionally delayed.

The previous Request and Certification under 35 U.S.C. § 122(b)(2)(B)(i) has been rescinded. A Notice Regarding Rescission of Nonpublication Request which sets forth the projected publication date of November 8, 2007 accompanies this decision on petition.

Telephone inquiries concerning this decision should be directed to Irvin Dingle at (571) 272-3210.

This application is being referred to Technology Center Art Unit 2165 for examination in due course.

Irvin Dingle
Petition Examiner
Office of Petitions

ATTACHMENT: Notice Regarding Rescission of Nonpublication Request

UNITED STATES PATENT AND TRADEMARK OFFICE

UNITED STATES DEPARTMENT OF COMMERCE
United States Patent and Trademark Office
Address: COMMISSIONER FOR PATENTS
P.O. Box 1450
Alexandria, Virginia 22313-1450
www.uspto.gov

APPLICATION NUMBER	FILING/RECEIPT DATE	FIRST NAMED APPLICANT	ATTY. DOCKET NO.
10/814,053	03/31/2004	Niniane Wang	24207-10105

CONFIRMATION NO. 5717

62296
GOOGLE / FENWICK
SILICON VALLEY CENTER
801 CALIFORNIA ST.
MOUNTAIN VIEW, CA 94041

Date Mailed: 07/31/2007

Communication Regarding Rescission Of Nonpublication Request and/or Notice of Foreign Filing

Applicant's rescission of the previously-filed nonpublication request and/or notice of foreign filing is acknowledged. The paper has been reflected in the Patent and Trademark Office's (USPTO's) computer records so that the earliest possible projected publication date can be assigned.

The projected publication date is 11/08/2007.

If applicant rescinded the nonpublication request before or on the date of "foreign filing,"[1] then no notice of foreign filing is required.

If applicant foreign filed the application after filing the above application and before filing the rescission, and the rescission did not also include a notice of foreign filing, then a notice of foreign filing (not merely a rescission) is required to be filed within 45 days of the date of foreign filing. See 35 U.S.C. § 122(b)(2)(B)(iii), and Clarification of the United States Patent and Trademark Office's Interpretation of the Provisions of 35 U.S.C. § 122(b)(2)(B)(ii)-(iv), 1272 Off. Gaz. Pat. Office 22 (July 1, 2003).

If a notice of foreign filing is required and is not filed within 45 days of the date of foreign filing, then the application becomes abandoned pursuant to 35 U.S.C. § 122(b)(2)(B)(iii). In this situation, applicant should either file a petition to revive or notify the Office that the application is abandoned. See 37 CFR 1.137(f). Any such petition to revive will be forwarded to the Office of Petitions for a decision. Note that the filing of the petition will not operate to stay any period of reply that may be running against the application.

Questions regarding petitions to revive should be directed to the Office of Petitions at (571) 272-3282. Questions regarding publications of patent applications should be directed to the patent application publication hotline at (703) 605-4283 or by e-mail pgpub@uspto.gov.

[1] Note, for purpose of this notice, that "foreign filing" means "filing an application directed to the same invention in another country, or under a multilateral international agreement, that requires publication of applications 18 months after filing".

UNITED STATES PATENT AND TRADEMARK OFFICE

Commissioner for Patents
United States Patent and Trademark Office
P.O. Box 1450
Alexandria, VA 22313-1450
www.uspto.gov

GOOGLE / FENWICK
SILICON VALLEY CENTER
801 CALIFORNIA ST.
MOUNTAIN VIEW, CA 94041

COPY MAILED

JUL 3 1 2007

OFFICE OF PETITIONS

In re Application of	:	
Niniane Wang et al	:	
Application No. 10/814,053	:	ON PETITION
Filed: March 31, 2004	:	
Attorney Docket No. 24207-10105	:	

This is a decision on the petition filed June 20, 2007 under 37 CFR 1.137(b), to revive the above-identified application.

The petition is **DISMISSED AS MOOT.**

The reply from the Notice of Allowance mailed April 10, 2007, which set a statutory period for reply of three (3) months, was timely received on July 9, 2007 in the form of the Payment of the Issue fee. Since the payment of the Issue fee was timely filed, this petition is dismissed as moot.

Telephone inquiries concerning this decision should be directed to the undersigned at (571) 272-3210.

This matter is being referred to Technology Center Art Unit 2165 for further processing.

Irvin Dingle
Petitions Examiner
Office of Petitions

UNITED STATES PATENT AND TRADEMARK OFFICE

Commissioner for Patents
United States Patent and Trademark Office
P.O. Box 1450
Alexandria, VA 22313-1450
www.uspto.gov

COPY MAILED

MAY 17 2007

OFFICE OF PETITIONS

Patent Department-53051
Kilpatrick Stockton LLP
1001 West Fourth Street
Winston-Salem, NC 27101

In re Application of	:	
Niniane Wang et al.	:	
Application No. 10/814,056	:	DECISION ON PETITION
Filed: March 31, 2004	:	TO WITHDRAW
Attorney Docket No. 24207-10082	:	FROM RECORD
	:	

This is a decision on the Request to Withdraw as attorney or agent of record under 37 C.F.R. § 1.36(b), filed March 10, 2005.

The request is **NOT APPROVED** as moot.

A review of the file record indicates that the power of attorney to Kilpatrick Stockton LLP has been revoked by the assignee of the patent application on November 14, 2006. Accordingly, the request to withdraw under 37 C.F.R. § 1.36(b) is moot.

All future communications from the Office will continue to be directed to the below-listed address until otherwise notified by applicant.

Telephone inquires concerning this decision should be directed to Terri Williams at 571-272-2991.

Terri Williams

Terri Williams
Petitions Examiner
Office of Petitions

cc: **Google/Fenwick**
Silicon Valley Center
801 California Street
Mountain View, CA 94041

UNITED STATES PATENT AND TRADEMARK OFFICE

Commissioner for Patents
United States Patent and Trademark Office
P.O. Box 1450
Alexandria, VA 22313-1450
www.uspto.gov

GOOGLE / FENWICK
SILICON VALLEY CENTER
801 CALIFORNIA ST.
MOUNTAIN VIEW CA 94041

COPY MAILED

AUG 3 1 2007

OFFICE OF PETITIONS

In re Application of
Niniane Wang et al
Application No. 10/814,056
Filed: March 31, 2004
Attorney Docket No. 24207-10082

DECISION ON PETITION
UNDER 37 CFR 1.137(b)

This is a decision on the petition, filed July 30, 2007, which is being treated as a petition under 37 CFR 1.137(b) to revive the instant nonprovisional application for failure to timely notify the U.S. Patent and Trademark (USPTO) of the filing of an application in a foreign country, or under a multinational treaty that requires publication of applications eighteen months after filing. *See* 37 CFR 1.137(f).

The petition is **DISMISSED**.

The petition indicates that the instant nonprovisional application is the subject of an application filed in an eighteen-month publication country on March 30, 2005. However, the USPTO was unintentionally not notified of this filing within 45 days subsequent to the filing of the subject application in an eighteen-month publication country. Accordingly, the request to rescind the nonpublication request must have been filed no later than May 17, 2005 (May 14, 2005, the due date, is a Saturday).

In view of the above, this application became abandoned pursuant to 35 U.S.C. § 122(b)(2)(B)(iii) and 37 CFR 1.213(c) for failure to timely notify the Office of the filing of an application in a foreign country or under a multilateral international agreement that requires publication of applications 18 months after filing. The date of abandonment of this application is May 14, 2005.

A petition to revive an application abandoned pursuant to 35 U.S.C. 122(b)(2)(B)(iii) for failure to notify the USPTO of a foreign filing must be accompanied by:

(1) the required reply which is met by the notification of such filing in a foreign country or under a multinational treaty;
(2) the petition fee as set forth in 37 CFR 1.17(m); and
(3) a statement that the entire delay in filing the required reply from the due date of the reply until the filing of a grantable petition was unintentional.

There are three periods to be considered during the evaluation of a petition under 37 CFR 1.137(b):

(1) the delay in reply that originally resulted in the abandonment;

(2) the delay in filing an initial petition pursuant to 37 CFR 1.137(b) to revive the application; and

(3) the delay in filing a grantable petition pursuant to 37 CFR 1.137(b) to revive the application.

Currently, the delay has not been shown to the satisfaction of the Director to be unintentional for periods (1) and (2).

As to Period (1):

The patent statute at 35 U.S.C. § 41(a)(7) authorizes the Director to revive an "unintentionally abandoned application." The legislative history of Public Law 97-247 reveals that the purpose of 35 U.S.C. § 41(a)(7) is to permit the Office to have more discretion than in 35 U.S.C. §§ 133 or 151 to revive abandoned applications in appropriate circumstances, but places a limit on this discretion, stating that "[u]nder this section a petition accompanied by either a fee of $500 or a fee of $50 **would not be granted where the abandonment** or the failure to pay the fee for issuing the patent **was intentional** as opposed to being unintentional or unavoidable." [emphasis added]. See H.R. Rep. No. 542, 97th Cong., 2d Sess. 6-7 (1982), *reprinted in* 1982 U.S.C.C.A.N. 770-71. The revival of an intentionally abandoned application is antithetical to the meaning and intent of the statute and regulation.

35 U.S.C. § 41(a)(7) authorizes the Director to accept a petition "for the revival of an unintentionally abandoned application for a patent." As amended December 1, 1997, 37 CFR 1.137(b)(3)

provides that a petition under 37 CFR 1.137(b) must be accompanied by a statement that the delay was unintentional, but provides that "[t]he Commissioner may require additional information where there is a question whether the delay was unintentional." Where, as here, there is a question whether the initial delay was unintentional, the petitioner must meet the burden of establishing that the delay was unintentional within the meaning of 35 U.S.C. § 41(a)(7) and 37 CFR 1.137(b). *See* In re Application of G, 11 USPQ2d 1378, 1380 (Comm'r Pats. 1989); 37 CFR 1.137(b). Here, in view of the inordinate delay (over two years) in notifying the Office of the March 30, 2005 foreign filing, there is a question whether the entire delay was unintentional. Petitioner should note that the issue is not whether some of the delay was unintentional by any party; rather, the issue is whether the entire delay has been shown to the satisfaction of the Director to be unintentional.

The question under 37 CFR 1.137(b) for period (1) is whether the delay on the part of the party having the right or authority to notify the Office of the foreign filing to avoid abandonment was unintentional. Accordingly, any renewed petition must clearly set forth the party responsible for informing the Office of the foreign filing, what efforts were made (or not made) by this party to notify the Office of the foreign filing, and why this delay should be considered unintentional. If no effort was made to notify the Office of the foreign filing, then that party must explain why the delay in this application does not result from a deliberate course of action (or inaction). Copies of any correspondence relating to the filing, or to not filing, the notification to rescind the nonpublication request are required from all persons having knowledge of the delay at issue here. As the courts have made clear, it is pointless for the USPTO to revive a long abandoned application without an adequate showing that the delay did not result from a deliberate course of action. *See* Lawman Armor v. Simon, 2005 U.S. Dist. LEXIS 10843, 74 USPQ2d 1633 (DC EMich 2005); Field Hybrids, LLC v. Toyota Motor Corp., 2005 U.S. Dist. LEXIS 1159 (D. Minn Jan. 27, 2005); Lumenyte Int'l Corp. v. Cable Lite Corp., Nos. 96-1011, 96-1077, 1996 U.S. App. LEXIS 16400, 1996 WL 383927 (Fed. Cir. July 9, 1996) (unpublished) (patents held unenforceable due to a finding of inequitable conduct in submitting an inappropriate statement that the abandonment was unintentional).

As to Period (2):

Likewise, where the applicant deliberately chooses not to seek or persist in seeking the revival of an abandoned application, or where the applicant deliberately chooses to delay seeking the revival of an abandoned application, the resulting delay in seeking revival of the abandoned application cannot be considered as "unintentional" within the meaning of 37 CFR 1.137(b). *See* MPEP 711.03(c).

The language of both 35 U.S.C. § 41(a)(7) and 37 CFR 1.137(b) are clear and unambiguous, and furthermore, without qualification. That is, the delay in filing the reply during prosecution, as well as in filing the petition seeking revival, must have been, without qualification, "unintentional" for the reply to now be accepted on petition. The Office requires that the entire delay be at least unintentional as a prerequisite to revival of an abandoned application to prevent abuse and injury to the public. *See* H.R. Rep. No. 542, 97th Cong., 2d Sess. 7 (1982), reprinted in 1982 U.S.C.C.A.N. 771 ("[i]n order to prevent abuse and injury to the public the Commissioner . . . could require applicants to act promptly after becoming aware of the abandonment"). The December 1997 change to 37 CFR 1.137 did not create any new right to overcome an intentional delay in seeking revival, or in renewing an attempt at seeking revival, of an abandoned application. *See* Changes to Patent Practice and Procedure; Final Rule Notice, 62 Fed. Reg. 53131, 53160 (October 10, 1997), 1203 Off. Gaz. Pat. Office 63, 87 (October 21, 1997), which clearly stated clear that any protracted delay (here, over two years) could trigger, as here, a request for additional information. As the courts have since made clear, a protracted delay in seeking revival, as here, requires a petitioner's detailed explanation seeking to excuse the delay as opposed to USPTO acceptance of a general allegation of unintentional delay. *See* Lawman Armor v. Simon, 2005 U.S. Dist. LEXIS 10843, 74 USPQ2d 1633, at 1637-8 (DC EMich 2005); Field Hybrids, LLC v. Toyota Motor Corp., 2005 U.S. Dist. LEXIS 1159 (D. Minn Jan. 27, 2005) at *21-*23. Statements are required from any and all persons having firsthand knowledge of the circumstances surrounding the protracted delay, after the abandonment date, in seeking revival.

As noted in MPEP 711.03(c)(II), subsection D, in instances in which such petition was not filed within 1 year of the date of abandonment of the application, applicants should include:

(A) the date that the applicant first became aware of the abandonment of the application; and
(B) a showing as to how the delay in discovering the abandoned status of the application occurred despite the exercise of due care or diligence on the part of the applicant.

In either instance, applicant's failure to carry the burden of proof to establish that the "entire" delay was "unavoidable" or "unintentional" may lead to the denial of a petition under 37 CFR 1.137(b), regardless of the circumstances that originally resulted in the abandonment of the application. *See also* New York University v. Autodesk, 2007 U.S. DIST LEXIS, U.S.District LEXIS 50832, *10 -*12 (S.D.N.Y. 2007)(protracted delay in seeking revival undercuts assertion of unintentional delay).

The previous Request and Certification under 35 U.S.C. § 122(b)(2)(B)(i) has been rescinded.

Any renewed petition may be addressed as follows:

By Mail: Mail Stop PETITION
Commissioner for Patents
P. O. Box 1450
Alexandria, VA 22313-1450

By hand: U. S. Patent and Trademark Office
Customer Service Window, Mail Stop Petitions
Randolph Building
401 Dulany Street
Alexandria, VA 22314

The centralized facsimile number is **(571) 273-8300.**

Correspondence regarding this decision may also be filed through the electronic filing system of the USPTO.

To expedite consideration, petitioner may wish to contact the undersigned regarding the filing of the renewed petition under 37 CFR 1.137(b).

Telephone inquiries concerning this decision should be directed to the undersigned at (571) 272-3218.

Frances Hicks
Petitions Examiner
Office of Petitions

UNITED STATES PATENT AND TRADEMARK OFFICE

Commissioner for Patents
United States Patent and Trademark Office
P.O. Box 1450
Alexandria, VA 22313-1450
www.uspto.gov

GOOGLE / FENWICK
SILICON VALLEY CENTER
801 CALIFORNIA STREET
MOUNTAIN VIEW, CA 94041

COPY MAILED

OCT 24 2007

OFFICE OF PETITIONS

In re Application of	:
Niniane Wang et al	:
Application No. 10/814,056	: DECISION ON PETITION
Filed: March 31, 2004	: UNDER 37 CFR 1.137(b)
Attorney Docket No. 24207-10082	:

This is a decision on the renewed petition, filed October 17, 2007, which is being treated as a petition under 37 CFR 1.137(b) to revive the instant nonprovisional application for failure to timely notify the U.S. Patent and Trademark (USPTO) of the filing of an application in a foreign country, or under a multinational treaty that requires publication of applications eighteen months after filing. *See* 37 CFR 1.137(f).

The petition is **GRANTED**.

Petitioner states that the instant nonprovisional application is the subject of an application filed in an eighteen-month publication country on March 30, 2005. However, the USPTO was unintentionally not notified of this filing within 45 days subsequent to the filing of the subject application in an eighteen-month publication country.

In view of the above, this application became abandoned pursuant to 35 U.S.C. § 122(b)(2)(B)(iii) and 37 CFR 1.213(c) for failure to timely notify the Office of the filing of an application in a foreign country or under a multilateral international agreement that requires publication of applications 18 months after filing.

A petition to revive an application abandoned pursuant to 35 U.S.C. 122(b)(2)(B)(iii) for failure to notify the USPTO of a foreign filing must be accompanied by:

(1) the required reply which is met by the notification of such filing in a foreign country or under a multinational treaty;

(2) the petition fee as set forth in 37 CFR 1.17(m); and
(3) a statement that the entire delay in filing the required reply from the due date of the reply until the filing of a grantable petition was unintentional.

The instant petition has been found to be in compliance with 37 CFR 1.137(b). Accordingly, the failure to timely notify the USPTO of a foreign or international filing within 45 days after the date of filing of such foreign or international application as provided by 35 U.S.C. § 122(b)(2)(B)(iii) and 37 CFR 1.213(c) is accepted as having been unintentionally delayed.

Telephone inquiries concerning this decision should be directed to the undersigned at (571) 272-3218.

A final Office action was mailed on September 28, 2007. Failure to timely reply will again result in the abandonment of this application.

Frances Hicks
Petitions Examiner
Office of Petitions

UNITED STATES PATENT AND TRADEMARK OFFICE

COMMISSIONER FOR PATENTS
UNITED STATES PATENT AND TRADEMARK OFFICE
P.O. BOX 1450
ALEXANDRIA, VA 22313-1450
WWW.USPTO.GOV

Paper No. None

UNILEVER INTELLECTUAL PROPERTY GROUP
700 SYLVAN AVENUE,
BLDG C2 SOUTH
ENGLEWOOD CLIFFS NJ 07632-3100

COPY MAILED

MAY 12 2005

OFFICE OF PETITIONS

In re Application of
Anat Shiloach et al.
Application No. 10/814,064
Filed: March 31, 2004
Attorney Docket Number:
J6894(C)
Title: ORDERED LIQUID
CRYSTALLINE CLEANSING
COMPOSITION WITH PARTICULATE
OPTICAL MODIFIERS

DECISION ON PETITION UNDER
37 C.F.R. §1.59(b)

This is a decision on the petition filed March 4, 2005, pursuant to 37 C.F.R. §1.59(b), requesting that a preliminary amendment be expunged.

The application was filed on March 31, 2004. On December 16, 2004, a Notice of Allowance and Issue Fee Due, was mailed, which set a shortened statutory period for reply of three (3) months. On February 22, 2005, Petitioner submitted a Preliminary Amendment. Petitioner requests that this Preliminary Amendment be expunged from the record.

The petition is **GRANTED-IN-PART.**

37 C.F.R. §1.59 sets forth:

§ 1.59 Expungement of information or copy of papers in application file.
(a)
(1) Information in an application will not be expunged, except as provided in paragraph (b) of this section.
(2) Information forming part of the original disclosure (i.e., written specification including the claims, drawings, and any preliminary amendment

specifically incorporated into an executed oath or declaration under §§ 1.63 and 1.175) will not be expunged from the application file.
(b) An applicant may request that the Office expunge information, other than what is excluded by paragraph (a)(2) of this section, by filing a petition under this paragraph. Any petition to expunge information from an application must include the fee set forth in § 1.17(h) and establish to the satisfaction of the Director that the expungement of the information is appropriate in which case a notice granting the petition for expungement will be provided.
(c) Upon request by an applicant and payment of the fee specified in § 1.19(b), the Office will furnish copies of an application, unless the application has been disposed of (see §§ 1.53(e), (f) and (g)). The Office cannot provide or certify copies of an application that has been disposed of.

[48 FR 2710, Jan. 20, 1983, effective Feb. 27, 1983; 49 FR 554, Jan. 4, 1984, effective Apr. 1, 1984; 49 FR 48416, Dec. 12, 1984, effective Feb. 11, 1985; 50 FR 23123, May 31, 1985, effective Feb. 11, 1985; revised, 60 FR 20195, Apr. 25, 1995, effective June 8, 1995; revised, 62 FR 53131, Oct. 10, 1997, effective Dec. 1, 1997; para. (b) revised, 65 FR 54604, Sept. 8, 2000, effective Nov. 7, 2000; para. (b) revised, 68 FR 14332, Mar. 25, 2003, effective May 1, 2003; revised, 68 FR 38611, June 30, 2003, effective July 30, 2003]

The matter Petitioner wishes to have expunged does not form part of the original disclosure. Petitioner has included the fee associated with the filing of petition under 37 C.F.R. §1.59 and has established to the satisfaction of the Director that the expungement of this information is appropriate.

As such, the electronic documents which contain these pages have been closed in the Office's Image File Wrapper software viewing program. The paper documents will not be removed from the physical file however, as the Office does not remove papers from paper files which have been scanned.

It is noted that the issue and publication fees were submitted with the present petition. The application file is being forwarded to the Office of Patent Publication for further processing.

The general phone number for the Office of Petitions, which should be used for status requests, is (571) 272-3282. Telephone inquiries regarding *this decision* should be directed to the undersigned at (571) 272-3225.

Paul Shanoski

Paul Shanoski
Senior Attorney
Office of Petitions
United States Patent and Trademark Office

UNITED STATES PATENT AND TRADEMARK OFFICE

Commissioner for Patents
United States Patent and Trademark Office
P.O. Box 1450
Alexandria, VA 22313-1450
www.uspto.gov

QUALCOMM INCORPORATED
5775 MOREHOUSE DRIVE
SAN DIEGO, CA 92121

COPY MAILED

DEC 05 2007

OFFICE OF PETITIONS

In re Application of
Gregory G. Rose
Application No. 10/814,065
Filed: March 30, 2004
Attorney Docket No. PA392C1C2C2

DECISION ON PETITION

This is a decision on the petition under 37 CFR 1.137(b), filed May 21, 2007, to revive the above-identified application.

The petition is **GRANTED**.

The application became abandoned for failure to reply in a timely manner to the non-final Office action mailed October 11, 2006, which set a shortened statutory period for reply of three (3) months. No extensions of time were obtained under the provisions of 37 CFR 1.136(a). Accordingly, the application became abandoned on January 12, 2007. A Notice of Abandonment was mailed on May 1, 2007.

The petition satisfies the requirements of 37 CFR 1.137(b) in that petitioner has supplied (1) the reply in the form of an "Terminal Disclaimer to Obviate a Double Patenting Rejection over a "prior" Patent," (2) the petition fee of $1,500, and (3) an adequate statement of unintentional delay. Accordingly, the reply to the Office action of October 11, 2006 is accepted as being unintentionally delayed.

The rule at 37 CFR 1.137(b)(3) requires a statement that "the entire delay in filing the required reply from the due date for the reply until the filing of a grantable petition pursuant to 37 CFR 1.137(b) was unintentional." Since the statement appearing in the petition varies from the language required by 37 CFR 1.137(b)(3), the statement is being construed as the required statement. Petitioner must notify the Office if this is **not** a correct reading of the statement appearing in the petition.

Telephone inquiries concerning this decision should be directed to the undersigned at (571) 272-3218.

This application is being referred to Technology Center AU 2137 for appropriate action in the normal course of business on the reply received May 21, 2007.

Frances Hicks
Petitions Examiner
Office of Petitions

UNITED STATES PATENT AND TRADEMARK OFFICE

Commissioner for Patents
United States Patent and Trademark Office
P.O. Box 1450
Alexandria, VA 22313-1450
www.uspto.gov

Patent Department – 53051
Kilpatrick Stockton LLP
1001 West Fourth Street
Winston-Salem, NC 27101

MAILED

AUG 2 6 2005

Technology Center 2100

In re Application of:
Mihai IONESCU
Application No. 10/814,069
Filed: March 31, 2004
For: METHODS AND SYSTEMS FOR PERFORMING AN OFFLINE SEARCH

DECISION ON REQUEST TO WITHDRAW AS ATTORNEY OR AGENT

This is a decision on the Request For Withdrawal As Attorney Under 37 CFR § 1.36 and 10.40(c) filed March 10, 2005.

A Revocation and Substitution Of Power Of Attorney Under 37 CFR § 1.36 was filed on May 5, 2005. The Power Of Attorney revoked all prior Powers Of Attorney and appointed Fenwick & West, LLP as the attorneys of record of the instant application. The Power Of Attorney of May 5, 2005 was accepted. Accordingly, all communications from the U.S. Patent and Trademark Office to applicant are to be conducted by Fenwick & West, LLP.

For the above stated reasons, the request is **DISMISSED AS MOOT**.

No further communication to you regarding this application will be made.

For Vincent N. Trans
Special Program Examiner
Technology Center 2100
Computer Architecture, Software, and Information Security
571-272-3613

cc: Fenwick & West LLP
Silicon Valley Center
801 California Street
Mountain View, CA 94041

UNITED STATES PATENT AND TRADEMARK OFFICE

Commissioner for Patents
United States Patent and Trademark Office
P.O. Box 1450
Alexandria, VA 22313-1450
www.uspto.gov

David A. Lundy
KRIEG DEVAULT LUNDY LLP
825 Anthony Wayne Bldg.
203 E. Berry Street
Fort Wayne, IN 46802

COPY MAILED
OCT 1 8 2006
OFFICE OF PETITIONS

In re Application of	:	
Joseph A. Tabe	:	
Application No. 10/814,087	:	DECISION ON PETITION
Filed: March 31, 2006	:	TO WITHDRAW
Attorney Docket No. TABE-3	:	FROM RECORD
	:	

This is a decision on the Request to Withdraw as attorney or agent of record under 37 C.F.R. § 1.36(b), filed June 16, 2006.

The request is **NOT APPROVED**.

A grantable request to withdraw as attorney/agent of record must be signed by every attorney/agent seeking to withdraw or contain a clear indication that one attorney is signing on behalf of another/others. A request to withdraw will not be approved unless at least 30 (thirty) days would remain between the date of approval and the later of the expiration date of a time to file a response or the expiration date of the maximum time period which can be extended under 37 C.F.R. § 1.136(a).

The Office cannot approve the request at this time since the reasons provided do not meet any of the conditions under the mandatory or permissive categories enumerated in 37 CFR 10.40. Section 10.40 of Title 37 of the Code of Federal Regulation states, "[a] practitioner shall not withdraw from employment in a proceeding before the Office without permission from the Office[.]" More specifically, 37 CFR 10.40 states, "[i]f paragraph (b) of this section is not applicable, a practitioner may not request permission to withdraw in matter pending before the Office unless such request or such withdrawal is" for one the permissive reasons listed in 37 CFR 10.40(c). The reasons set forth in the request, **termination of attorney-client relationship**, do not meet any the conditions set forth in 37 CFR 10.40.

All future communications from the Office will continue to be directed to the above-listed address until otherwise notified by applicant.

Telephone inquiries concerning this decision should be directed to Terri Williams at 571-272- 2991.

Diana C. Walsh for
Amelia Au
Petitions Examiner
Office of Petitions

cc: **Joseph A. Tabe**
11700 Old Columbia Pike, Apt. 717
Silver Spring, MD 20904

UNITED STATES PATENT AND TRADEMARK OFFICE

COMMISSIONER FOR PATENTS
UNITED STATES PATENT AND TRADEMARK OFFICE
P.O. BOX 1450
ALEXANDRIA, VA 22313-1450
WWW.USPTO.GOV

Paper No. None

COPY MAILED

MAR 14 2007

OFFICE OF PETITIONS

BEYER WEAVER LLP
P.O. BOX 70250
OAKLAND CA 94612-0250

In re Application of Shigeomi Chono et al. Application No. 10/814,110 Filing Date: March 30, 2004 Attorney Docket No.: YMUCP002 Title: LIQUID CRYSTAL FLOW FORMING MECHANISM, METHOD OF FORMING SAME, AND OBJECT MOVING MECHANISM USING LIQUID CRYSTAL FLOW	DECISION ON PETITION UNDER 37 C.F.R. §1.78(A)(3)

This is a decision on the petition pursuant to 37 C.F.R. §1.78(a)(3), filed November 13, 2006 to accept an unintentionally delayed claim under 35 U.S.C. §120 for the benefit of priority to the prior-filed international application set forth in the amendment filed with the petition.

The petition is **DISMISSED**

A petition for acceptance of a claim for late priority under 37 C.F.R. §1.78(a)(3) is only applicable to those applications filed on or after November 29, 2000. Further, the petition is appropriate only after the expiration of the period specified in 37 C.F.R. 1.78(a)(2)(ii). In addition, the petition under 37 C.F.R. 1.78(a)(3) must be accompanied by:

(1) the reference required by 35 U.S.C. § 120 and 37 C.F.R. §1.78(a)(2)(i) of the prior-filed application, unless previously submitted;
(2) the surcharge set forth in § 1.17(t); and

(3) a statement that the entire delay between the date the claim was due under 37 C.F.R. §1.78(a)(2)(ii) and the date the claim was filed was unintentional. The Director may require additional information where there is a question whether the delay was unintentional.

The petition does not satisfy item (1) above.

The reference has been provided by way of an amendment that cannot be accepted. Petitioner's representative has included an amendment to the specification along with this petition, and both have been presented on the same sheet of paper. For this reason, the petition cannot be accepted, pursuant to 37 C.F.R. §1.4(c), which sets forth, *in toto*:

> Since different matters may be considered by different branches or sections of the United States Patent and Trademark Office, each distinct subject, inquiry or order must be contained in a separate paper to avoid confusion and delay in answering papers dealing with different subjects.

Furthermore, even if the amendment could be accepted as filed, it is improper. The reference to add the above-noted, prior-filed application on page one following the first sentence of the specification is not acceptable as drafted since it improperly incorporates by reference the prior-filed application. An incorporation by reference statement added after an application's filing date is not effective because no new matter can be added to an application after its filing date (see 35 U.S.C. § 132(a)). If an incorporation by reference statement is included in an amendment to the specification to add a benefit claim under 35 U.S.C. §120 after the filing date of the application, the amendment would not be proper. When a benefit claim under 35 U.S.C. §120 is submitted after the filing of an application, the reference to the prior application cannot include an incorporation by reference statement of the prior application. See Dart Industries v. Banner, 636 F.2d 684, 207 USPQ 273 (C.A.D.C. 1980). *Note* MPEP §§ 201.06(c) and 608.04(b).

Moreover, the amendment fails to comply with the requirements of 37 C.F.R. §1.121 in that the text that is to be added has not been underlined. Furthermore, if Petitioner's representative wishes to amend the priority claim, he may wish to consider the deletion of the improper benefit claim which was submitted via a preliminary amendment to the specification on Augsut 25, 2004.

Before the petition under 37 C.F.R. § 1.78(a)(3) can be granted, a renewed petition and either an Application Data Sheet or an

amendment (complying with the provisions of 37 C.F.R. §§1.76(b)(5) and 1.121) to correct the above matters are required.

It is noted that the electronic file associated with the present application indicates that a final Office action was mailed on November 16, 2006. Entry of an after-final amendment cannot be made as a matter of right. Accordingly, a request for continued examination (RCE) may be required for entry of any amendment filed on renewed petition.

Any reply should include a cover letter entitled "Renewed Petition Under 37 C.F.R. §1.78(a)(3)." This is not a final agency action within the meaning of 5 U.S.C 704. The renewed petition should indicate in a prominent manner that the attorney handling this matter is Paul Shanoski, and may be submitted by mail[1], hand-delivery[2], or facsimile[3].

Petitioner's representative will note that an ADS filed with the application is not required to be signed unless the ADS includes a nonpublication request. 37 C.F.R. §1.33(b) requires that amendments and other papers, except for written assertions pursuant to 37 C.F.R. §1.27(c)(2)(ii), filed in the application must be signed by an appropriate party. Therefore, an ADS or a supplemental ADS filed after the filing of an application must be signed in accordance with 37 C.F.R. §1.33(b).

The general phone number for the Office of Petitions which should be used for status requests is (571) 272-3282. Telephone inquiries regarding this decision should be directed to Senior Attorney Paul Shanoski at (571) 272-3225.

Nancy Johnson

Ira Lazarus
Supervisory Petitions Examiner
Office of Petitions
United States Patent and Trademark Office

---

1 Mail Stop Petition, Commissioner for Patents, United States Patent and Trademark Office, P.O. Box 1450, Alexandria, VA, 22313-1450.
2 Customer Window, Randolph Building, 401 Dulaney Street, Alexandria, VA, 22314.
3 (571) 273-8300- please note this is a central facsimile number.

UNITED STATES PATENT AND TRADEMARK OFFICE

COMMISSIONER FOR PATENTS
UNITED STATES PATENT AND TRADEMARK OFFICE
P.O. BOX 1450
ALEXANDRIA, VA 22313-1450
WWW.USPTO.GOV

Paper No. None

BEYER WEAVER LLP
P.O. BOX 70250
OAKLAND CA 94612-0250

COPY MAILED
SEP 04 2007
OFFICE OF PETITIONS

In re Application of :
Shigeomi Chono et al. :
Application No. 10/814,110 : DECISION ON RENEWED PETITION
Filing Date: March 30, 2004 : UNDER 37 C.F.R. §1.78(A)(3)
Attorney Docket No.: YMUCP002 :
Title: LIQUID CRYSTAL FLOW :
FORMING MECHANISM, METHOD OF :
FORMING SAME, AND OBJECT MOVING :
MECHANISM USING LIQUID CRYSTAL :
FLOW :

This is a decision on the renewed petition pursuant to 37 C.F.R. § 1.78(a)(3), filed April 5, 2007 to accept an unintentionally delayed claim under 35 U.S.C. §120 for the benefit of priority to the prior-filed international application set forth in the amendment filed with the petition.

An original petition was filed on November 13, 2006, and was dismissed via the mailing of a decision on March 14, 2007.

This renewed petition is **DISMISSED**

A petition for acceptance of a claim for late priority under 37 C.F.R. §1.78(a)(3) is only applicable to those applications filed on or after November 29, 2000. Further, the petition is appropriate only after the expiration of the period specified in 37 C.F.R. 1.78(a)(2)(ii). In addition, the petition under 37 C.F.R. 1.78(a)(3) must be accompanied by:

(1) the reference required by 35 U.S.C. § 120 and 37 C.F.R. §1.78(a)(2)(i) of the prior-filed application, unless previously submitted;
(2) the surcharge set forth in § 1.17(t); and
(3) a statement that the entire delay between the date the claim was due under 37 C.F.R. §1.78(a)(2)(ii) and the date the claim was filed was unintentional. The Director may require additional information where there is a question whether the delay was unintentional.

The petition does not satisfy item (1) above.

The reference to add the above-noted, prior-filed application on page one following the first sentence of the specification is not acceptable as drafted since it **improperly incorporates by reference the prior-filed application.** An incorporation by reference statement added after an application's filing date is not effective because no new matter can be added to an application after its filing date (see 35 U.S.C. § 132(a)). If an incorporation by reference statement is included in an amendment to the specification to add a benefit claim under 35 U.S.C. §120 after the filing date of the application, the amendment would not be proper. When a benefit claim under 35 U.S.C. §120 is submitted after the filing of an application, the reference to the prior application cannot include an incorporation by reference statement of the prior application. See Dart Industries v. Banner, 636 F.2d 684, 207 USPQ 273 (C.A.D.C. 1980). *Note* MPEP §§ 201.06(c) and 608.04(b).

Moreover, the amendment fails to comply with the requirements of 37 C.F.R. §1.121 in that **the text that is to be added has not been underlined.** Furthermore, if Petitioner wishes to amend the priority claim, he may wish to consider the **deletion of the improper benefit claim** that was submitted via a preliminary amendment to the specification on August 25, 2004.

Before the petition under 37 C.F.R. § 1.78(a)(3) can be granted, a renewed petition and either an Application Data Sheet or an amendment (complying with the provisions of 37 C.F.R. §§1.76(b)(5) and 1.121) to correct the above matters are required.

Any reply should include a cover letter entitled "Second Renewed Petition Under 37 C.F.R. § 1.78(a)(3)." This is not a final agency action within the meaning of 5 U.S.C § 704.

The renewed petition should indicate in a prominent manner that the attorney handling this matter is Paul Shanoski, and may be submitted by mail[1], hand-delivery[2], or facsimile[3]. Registered users of EFS-Web may alternatively submit a response to this decision via EFS-Web[4].

If responding by mail, Petitioner is advised not to place the undersigned's name on the envelope. Only the information that appears in the footnote should be included - adding anything else to the address will delay the delivery of the response to the undersigned.

Petitioner will note that an ADS filed with the application is not required to be signed unless the ADS includes a nonpublication request. 37 C.F.R. §1.33(b) requires that amendments and other papers, except for written assertions pursuant to 37 C.F.R. §1.27(c)(2)(ii), filed in the application must be signed by an appropriate party. Therefore, an ADS or a supplemental ADS filed after the filing of an application must be signed in accordance with 37 C.F.R. §1.33(b).

The general phone number for the Office of Petitions which should be used for status requests is (571) 272-3282. Telephone inquiries regarding this decision should be directed to Senior Attorney Paul Shanoski at (571) 272-3225.

Nancy Johnson
Senior Attorney
Office of Petitions
United States Patent and Trademark Office

1 Mail Stop Petition, Commissioner for Patents, United States Patent and Trademark Office, P.O. Box 1450, Alexandria, VA, 22313-1450.
2 Customer Window, Randolph Building, 401 Dulaney Street, Alexandria, VA, 22314.
3 (571) 273-8300- please note this is a central facsimile number.
4 https://sportal.uspto.gov/authenticate/authenticateuserlocalepf.html

UNITED STATES PATENT AND TRADEMARK OFFICE

COMMISSIONER FOR PATENTS
UNITED STATES PATENT AND TRADEMARK OFFICE
P.O. BOX 1450
ALEXANDRIA, VA 22313-1450
WWW.USPTO.GOV

Paper No.

BEYER WEAVER LLP
P.O. BOX 70250
OAKLAND CA 94612-0250

COPY MAILED

MAR 27 2008

OFFICE OF PETITIONS

In re Application of :
Shigeomi Chono et al. :
Application No. 10/814,110 :
Filing Date: March 30, 2004 :
Attorney Docket No.: YMUCP002 :
Title: LIQUID CRYSTAL FLOW :
FORMING MECHANISM, METHOD OF :
FORMING SAME, AND OBJECT MOVING :
MECHANISM USING LIQUID CRYSTAL :
FLOW :

DECISION ON SECOND RENEWED PETITION PURSUANT TO 37 C.F.R. § 1.78(A)(3)

This is a decision on the second renewed petition pursuant to 37 C.F.R. § 1.78(a)(3), filed September 20, 2007, to accept an unintentionally delayed claim under 35 U.S.C. § 120 for the benefit of priority to the prior-filed international application, set forth in the amendment filed with the petition.

An original petition was filed on November 13, 2006, and was dismissed via the mailing of a decision on March 14, 2007. A renewed petition was filed on April 5, 2007,and was dismissed via the mailing of a decision on September 4, 2007.

This second renewed petition is **GRANTED.**

A petition for acceptance of a claim for late priority under 37 C.F.R. § 1.78(a)(3) is only applicable to those applications filed on or after November 29, 2000. Further, the petition is appropriate only after the expiration of the period specified in 37 C.F.R. § 1.78(a)(2)(ii). In addition, the petition pursuant to 37 C.F.R. § 1.78(a)(3) must be accompanied by:

(1) the reference required by 35 U.S.C. § 120 and 37 C.F.R. § 1.78(a)(2)(i) of the prior-filed application, unless previously submitted;
(2) the surcharge set forth in § 1.17(t); and
(3) a statement that the entire delay between the date the claim was due under 37 C.F.R. § 1.78(a)(2)(ii) and the date the claim was filed was unintentional. The Director may require additional information where there is a question whether the delay was unintentional.

A petition for acceptance of a claim for late priority pursuant to 37 C.F.R. § 1.78(a)(3) is only applicable to those applications filed on or after November 29, 2000. Further, the petition is appropriate only after the expiration of the period specified in 37 C.F.R. § 1.78(a)(2)(ii). In addition, the petition pursuant to 37 C.F.R. § 1.78(a)(3) must be accompanied by:

(1) the reference required by 35 U.S.C. § 120 and 37 C.F.R. § 1.78(a)(2)(i) of the prior-filed application, unless previously submitted;
(2) the surcharge set forth in § 1.17(t); and
(3) a statement that the entire delay between the date the claim was due under 37 C.F.R. § 1.78(a)(2)(ii) and the date the claim was filed was unintentional. The Director may require additional information where there is a question whether the delay was unintentional.

37 C.F.R. § 1.78(a)(3)(iii) requires a statement that the entire delay between the date the claim was due under paragraph (a)(2)(ii) of 37 C.F.R. § 1.78 and the date the claim was filed was unintentional.

Since the statement contained in this second renewed petition varies slightly from the language required by 37 C.F.R. § 1.78(a)(3)(iii), the statement contained in this petition is being construed as the statement required by 37 C.F.R. § 1.78(a)(3)(iii), and Petitioner must notify the Office if this is not a correct interpretation of the statement contained in this petition.

All of the above requirements having been satisfied, the late claim for priority pursuant to 35 U.S.C. § 120 is accepted as being unintentionally delayed.

The granting of this petition to accept the delayed benefit claim to the prior-filed application pursuant to 37 C.F.R. § 1.78(a)(3) should not be construed as meaning that this application is entitled to the benefit of the prior-filed application. In order for this application to be entitled to the benefit of the prior-filed application, all other requirements under 35 U.S.C. § 120 and 37 C.F.R. §§ 1.78(a)(1) and (a)(2) must be met. Similarly, the fact that the corrected Filing Receipt accompanying this decision on petition includes the prior-filed application should not be construed as meaning that Applicant is entitled to the claim for benefit of priority to the prior-filed application noted thereon. Accordingly, the Examiner will, in due course, consider this benefit claim and determine whether the application is entitled to the benefit of the earlier filing date.

A corrected Filing Receipt, which includes the priority claim to the prior-filed nonprovisional application, accompanies this decision on second renewed petition.

Any inquiries concerning this decision may be directed to Senior Attorney Paul Shanoski at (571) 272-3225. All other inquiries concerning either the examination procedures or status of the application should be directed to the Technology Center.

Technology Center Art Unit 2871 will be made aware of this decision, so that the Examiner may consider Applicant's entitlement to claim benefit of priority under 35 U.S.C. § 120 to the prior-filed nonprovisional applications.

Anthony Knight
Supervisor
Office of Petitions

ATTACHMENT: Corrected Filing Receipt

UNITED STATES PATENT AND TRADEMARK OFFICE

UNITED STATES DEPARTMENT OF COMMERCE
United States Patent and Trademark Office
Address: COMMISSIONER FOR PATENTS
P.O. Box 1450
Alexandria, Virginia 22313-1450
www.uspto.gov

APPLICATION NUMBER	FILING or 371(c) DATE	GRP ART UNIT	FIL FEE REC'D	ATTY.DOCKET.NO	TOT CLAIMS	IND CLAIMS
10/814,110	03/30/2004	2871	851	YMUCP002	31	7

CONFIRMATION NO. 5193

CORRECTED FILING RECEIPT

22434
BEYER WEAVER LLP
P.O. BOX 70250
OAKLAND, CA 94612-0250

OC000000028805479

Date Mailed: 03/13/2008

Receipt is acknowledged of this non-provisional patent application. The application will be taken up for examination in due course. Applicant will be notified as to the results of the examination. Any correspondence concerning the application must include the following identification information: the U.S. APPLICATION NUMBER, FILING DATE, NAME OF APPLICANT, and TITLE OF INVENTION. Fees transmitted by check or draft are subject to collection. Please verify the accuracy of the data presented on this receipt. **If an error is noted on this Filing Receipt, please write to the Office of Initial Patent Examination's Filing Receipt Corrections. Please provide a copy of this Filing Receipt with the changes noted thereon. If you received a "Notice to File Missing Parts" for this application, please submit any corrections to this Filing Receipt with your reply to the Notice. When the USPTO processes the reply to the Notice, the USPTO will generate another Filing Receipt incorporating the requested corrections**

Applicant(s)

Shigeomi Chono, Nanoku, JAPAN;
Tomohiro Tsuji, Kami-gun, JAPAN;

Power of Attorney: The patent practitioners associated with Customer Number 022434

Domestic Priority data as claimed by applicant

This application is a CON of PCT/JP02/10129 09/27/2002

Foreign Applications

JAPAN 2001-305581 10/01/2001

If Required, Foreign Filing License Granted: 06/19/2004

The country code and number of your priority application, to be used for filing abroad under the Paris Convention, is **US 10/814,110**

Projected Publication Date: Not Applicable

Non-Publication Request: No

Early Publication Request: No
**** SMALL ENTITY ****

Title

Liquid crystal flow forming mechanism, method of forming same, and object moving mechanism using liquid crystal flow

Preliminary Class

349

PROTECTING YOUR INVENTION OUTSIDE THE UNITED STATES

Since the rights granted by a U.S. patent extend only throughout the territory of the United States and have no effect in a foreign country, an inventor who wishes patent protection in another country must apply for a patent in a specific country or in regional patent offices. Applicants may wish to consider the filing of an international application under the Patent Cooperation Treaty (PCT). An international (PCT) application generally has the same effect as a regular national patent application in each PCT-member country. The PCT process **simplifies** the filing of patent applications on the same invention in member countries, but **does not result** in a grant of "an international patent" and does not eliminate the need of applicants to file additional documents and fees in countries where patent protection is desired.

Almost every country has its own patent law, and a person desiring a patent in a particular country must make an application for patent in that country in accordance with its particular laws. Since the laws of many countries differ in various respects from the patent law of the United States, applicants are advised to seek guidance from specific foreign countries to ensure that patent rights are not lost prematurely.

Applicants also are advised that in the case of inventions made in the United States, the Director of the USPTO must issue a license before applicants can apply for a patent in a foreign country. The filing of a U.S. patent application serves as a request for a foreign filing license. The application's filing receipt contains further information and guidance as to the status of applicant's license for foreign filing.

Applicants may wish to consult the USPTO booklet, "General Information Concerning Patents" (specifically, the section entitled "Treaties and Foreign Patents") for more information on timeframes and deadlines for filing foreign patent applications. The guide is available either by contacting the USPTO Contact Center at 800-786-9199, or it can be viewed on the USPTO website at http://www.uspto.gov/web/offices/pac/doc/general/index.html.

For information on preventing theft of your intellectual property (patents, trademarks and copyrights), you may wish to consult the U.S. Government website, http://www.stopfakes.gov. Part of a Department of Commerce initiative, this website includes self-help "toolkits" giving innovators guidance on how to protect intellectual property in specific countries such as China, Korea and Mexico. For questions regarding patent enforcement issues, applicants may call the U.S. Government hotline at 1-866-999-HALT (1-866-999-4158).

LICENSE FOR FOREIGN FILING UNDER

Title 35, United States Code, Section 184

Title 37, Code of Federal Regulations, 5.11 & 5.15

GRANTED

The applicant has been granted a license under 35 U.S.C. 184, if the phrase "IF REQUIRED, FOREIGN FILING LICENSE GRANTED" followed by a date appears on this form. Such licenses are issued in all applications where

the conditions for issuance of a license have been met, regardless of whether or not a license may be required as set forth in 37 CFR 5.15. The scope and limitations of this license are set forth in 37 CFR 5.15(a) unless an earlier license has been issued under 37 CFR 5.15(b). The license is subject to revocation upon written notification. The date indicated is the effective date of the license, unless an earlier license of similar scope has been granted under 37 CFR 5.13 or 5.14.

This license is to be retained by the licensee and may be used at any time on or after the effective date thereof unless it is revoked. This license is automatically transferred to any related applications(s) filed under 37 CFR 1.53(d). This license is not retroactive.

The grant of a license does not in any way lessen the responsibility of a licensee for the security of the subject matter as imposed by any Government contract or the provisions of existing laws relating to espionage and the national security or the export of technical data. Licensees should apprise themselves of current regulations especially with respect to certain countries, of other agencies, particularly the Office of Defense Trade Controls, Department of State (with respect to Arms, Munitions and Implements of War (22 CFR 121-128)); the Bureau of Industry and Security, Department of Commerce (15 CFR parts 730-774); the Office of Foreign AssetsControl, Department of Treasury (31 CFR Parts 500+) and the Department of Energy.

NOT GRANTED

No license under 35 U.S.C. 184 has been granted at this time, if the phrase "IF REQUIRED, FOREIGN FILING LICENSE GRANTED" DOES NOT appear on this form. Applicant may still petition for a license under 37 CFR 5.12, if a license is desired before the expiration of 6 months from the filing date of the application. If 6 months has lapsed from the filing date of this application and the licensee has not received any indication of a secrecy order under 35 U.S.C. 181, the licensee may foreign file the application pursuant to 37 CFR 5.15(b).

UNITED STATES PATENT AND TRADEMARK OFFICE

UNITED STATES DEPARTMENT OF COMMERCE
United States Patent and Trademark Office
Address: COMMISSIONER FOR PATENTS
P.O. Box 1450
Alexandria, Virginia 22313-1450
www.uspto.gov

FULBRIGHT & JAWORSKI L.L.P.
600 CONGRESS AVE.
SUITE 2400
AUSTIN, TX 78701

Mail Date: 04/22/2010

Applicant	: Johan Frostegard	: DECISION ON REQUEST FOR
Patent Number	: 7662577	: RECALCULATION of PATENT
Issue Date	: 02/16/2010	: TERM ADJUSTMENT IN VIEW
Appliction No	: 10/814,125	: OF WYETH AND NOTICE OF INTENT TO
Filed	: 04/01/2004	: ISSUE CERTIFICATE OF CORRECTION
		:

The Request for Recalculation is **GRANTED** to the extent indicated.

The patent term adjustment has been determined to be **904** days. The USPTO will *sua sponte* issue a certificate of correction reflecting the amount of PTA days determined by the recalculation.

Prior to the issuance of the certificate of correction, the USPTO will afford patentee an opportunity to be heard and request reconsideration. Accordingly, patentee has **one month or thirty (30) days**, whichever is longer, to file a request for reconsideration of this patent term adjustment calculation. See 35 U.S.C. 154(b)(3)(B)(ii) and 37 CFR 1.322(a)(4). No extensions of time will be granted under 37 CFR 1.136.

Patentee should use document code PET.OP if electronically filing a request for reconsideration of this patent term adjustment calculation. The patentee must also include the information required by 37 CFR 1.705(b)(2) and the fee required by 37 CFR 1.18(e). If patentee does not file a timely request for reconsideration of this patent term adjustment calculation including the information required by 37 CFR 1.705(b)(2) and the fee required by 37 CFR 1.18(e), the USPTO will issue a certificate of correction reflecting the PTA determination noted above.

Patentee should be aware that in order to preserve the right to review in the United States District Court for the District of Columbia of the USPTO patent term adjustment determination, patentee must ensure that he or she also take the steps required under 35 U.S.C. 154(b)(4)(A) in a timely manner. Nothing in the request for recalculation should be construed as providing an alternative time frame for commencing a civil action under 35 U.S.C. 154(b)(4)(A).

Any questions concerning this decision should be directed to the Office of Patent Legal Administration at 571-272-7702.

UNITED STATES PATENT AND TRADEMARK OFFICE

Commissioner for Patents
United States Patent and Trademark Office
P.O. Box 1450
Alexandria, VA 22313-1450
www.uspto.gov

BIRCH STEWART KOLASCH & BIRCH
P O BOX 747
FALLS CHURCH, VA 22040-0747

COPY MAILED

MAY 0 2 2006

OFFICE OF PETITIONS

In re Application of	:
Koji Matsuoka et al	:
Application No. 10/814,143	: DECISION GRANTING PETITION
Filed: April 1, 2004	: UNDER 37 CFR 1.313(c)(2)
Attorney Docket No. 2936-0213PUS1	:

This is a decision on the petition, filed April 24, 2006, under 37 CFR 1.313(c)(2) to withdraw the above-identified application from issue after payment of the issue fee.

The petition is **GRANTED**.

The above-identified application is withdrawn from issue for consideration of a submission under 37 CFR 1.114 (request for continued examination). See 37 CFR 1.313(c)(2).

Petitioner is advised that the issue fee paid on April 10, 2006 in the above-identified application cannot be refunded. If, however, the above-identified application is again allowed, petitioner may request that it be applied towards the issue fee required by the new Notice of Allowance.[1]

Telephone inquiries should be directed to the undersigned at (571) 272-3218.

This matter is being referred to Technology Center AU 2871 for processing of the request for continued examination under 37 CFR 1.114 and for consideration of the Information Disclosure Statement.

Frances Hicks
Petitions Examiner
Office of Petitions

C:\Documents and Settings\FHicks\My Documents\470\may9\814143.wpd

---

[1] *The request to apply the issue fee to the new Notice may be satisfied by completing and returning the new Part B – Fee(s) Transmittal Form (along with any balance due at the time of submission), which includes the following language thereon: "The Director of the USPTO is requested to apply the Issue Fee and Publication Fee (if any) or to re-apply any previously paid issue fee in the application identified above. Petitioner is advised that, whether a fee is indicated as being due or not, the Issue Fee Transmittal Form* ***must*** *be completed and timely submitted to avoid abandonment. Note the language in bold text on the first page of the Notice of Allowance and Fee(s) Due (PTOL-85).*

UNITED STATES PATENT AND TRADEMARK OFFICE

UNITED STATES DEPARTMENT OF COMMERCE
United States Patent and Trademark Office
Address: COMMISSIONER FOR PATENTS
P.O. Box 1450
Alexandria, Virginia 22313-1450
www.uspto.gov

DICKSTEIN SHAPIRO LLP
1825 EYE STREET, NW
WASHINGTON, DC 20006

Mail Date: 04/21/2010

Applicant	: Scott Patrick Campbell	: DECISION ON REQUEST FOR
Patent Number	: 7609308	: RECALCULATION of PATENT
Issue Date	: 10/27/2009	: TERM ADJUSTMENT IN VIEW
Appliction No	: 10/814,176	: OF WYETH AND NOTICE OF INTENT TO
Filed	: 04/01/2004	: ISSUE CERTIFICATE OF CORRECTION
		:

The Request for Recalculation is **GRANTED** to the extent indicated.

The patent term adjustment has been determined to be **1383** days. The USPTO will *sua sponte* issue a certificate of correction reflecting the amount of PTA days determined by the recalculation.

Prior to the issuance of the certificate of correction, the USPTO will afford patentee an opportunity to be heard and request reconsideration. Accordingly, patentee has **one month or thirty (30) days**, whichever is longer, to file a request for reconsideration of this patent term adjustment calculation. See 35 U.S.C. 154(b)(3)(B)(ii) and 37 CFR 1.322(a)(4). No extensions of time will be granted under 37 CFR 1.136.

Patentee should use document code PET.OP if electronically filing a request for reconsideration of this patent term adjustment calculation. The patentee must also include the information required by 37 CFR 1.705(b)(2) and the fee required by 37 CFR 1.18(e). If patentee does not file a timely request for reconsideration of this patent term adjustment calculation including the information required by 37 CFR 1.705(b)(2) and the fee required by 37 CFR 1.18(e), the USPTO will issue a certificate of correction reflecting the PTA determination noted above.

Patentee should be aware that in order to preserve the right to review in the United States District Court for the District of Columbia of the USPTO patent term adjustment determination, patentee must ensure that he or she also take the steps required under 35 U.S.C. 154(b)(4)(A) in a timely manner. Nothing in the request for recalculation should be construed as providing an alternative time frame for commencing a civil action under 35 U.S.C. 154(b)(4)(A).

Any questions concerning this decision should be directed to the Office of Patent Legal Administration at 571-272-7702.

UNITED STATES PATENT AND TRADEMARK OFFICE

UNITED STATES DEPARTMENT OF COMMERCE
United States Patent and Trademark Office
Address: COMMISSIONER FOR PATENTS
P.O. Box 1450
Alexandria, Virginia 22313-1450
www.uspto.gov

WENDEROTH, LIND & PONACK, L.L.P.
1030 15th Street, N.W.,
Suite 400 East
Washington, DC 20005-1503

Mail Date: 05/20/2010

Applicant	: Masashi Murakami	: DECISION ON REQUEST FOR
Patent Number	: 7619673	: RECALCULATION of PATENT
Issue Date	: 11/17/2009	: TERM ADJUSTMENT IN VIEW
Application No	: 10/814,185	: OF WYETH AND NOTICE OF INTENT TO
Filed	: 04/01/2004	: ISSUE CERTIFICATE OF CORRECTION
		:

The Request for Recalculation is **GRANTED** to the extent indicated.

The patent term adjustment has been determined to be **1554** days. The USPTO will *sua sponte* issue a certificate of correction reflecting the amount of PTA days determined by the recalculation.

Prior to the issuance of the certificate of correction, the USPTO will afford patentee an opportunity to be heard and request reconsideration. Accordingly, patentee has **one month or thirty (30) days**, whichever is longer, to file a request for reconsideration of this patent term adjustment calculation. See 35 U.S.C. 154(b)(3)(B)(ii) and 37 CFR 1.322(a)(4). No extensions of time will be granted under 37 CFR 1.136.

Patentee should use document code PET.OP if electronically filing a request for reconsideration of this patent term adjustment calculation. The patentee must also include the information required by 37 CFR 1.705(b)(2) and the fee required by 37 CFR 1.18(e). If patentee does not file a timely request for reconsideration of this patent term adjustment calculation including the information required by 37 CFR 1.705(b)(2) and the fee required by 37 CFR 1.18(e), the USPTO will issue a certificate of correction reflecting the PTA determination noted above.

Patentee should be aware that in order to preserve the right to review in the United States District Court for the District of Columbia of the USPTO patent term adjustment determination, patentee must ensure that he or she also take the steps required under 35 U.S.C. 154(b)(4)(A) in a timely manner. Nothing in the request for recalculation should be construed as providing an alternative time frame for commencing a civil action under 35 U.S.C. 154(b)(4)(A).

Any questions concerning this decision should be directed to the Office of Patent Legal Administration at 571-272-7702.

UNITED STATES PATENT AND TRADEMARK OFFICE

Commissioner for Patents
United States Patent and Trademark Office
P.O. Box 1450
Alexandria, VA 22313-1450
www.uspto.gov

COPY MAILED

FEB 19 2008

OFFICE OF PETITIONS

MANELLI DENISON & SELTER
2000 M STREET NW SUITE 700
WASHINGTON DC 20036-3307

In re Application of	:	
Andre Rioux	:	
Application No. 10/814,234	:	ON PETITION
Filed: April 1, 2004	:	
Attorney Docket No. 62-335	:	

This is a decision on the petition to withdraw the holding of abandonment under 37 CFR 1.181, filed January 28, 2008.

The petition is **GRANTED**.

This application was held abandoned for failure to timely file a response to the non-final Office action mailed June 26, 2007. This Office action set an extendable period for reply of three (3) months. No reply having been received, the application became abandoned on September 27, 2007. A Notice of Abandonment was mailed on January 28, 2008.

Petitioner contends that he did timely file a reply. In support, petitioner has included a copy of a USPTO date stamped postcard receipt dated July 20, 2007, and itemizing an amendment.

A postcard receipt which itemizes and properly identifies the items which are being filed serves as *prima facie* evidence of receipt in the Office of all items listed thereon on the date stamped thereon by the Office. See MPEP 503.

In view thereof, **THE HOLDING OF ABANDONMENT IS WITHDRAWN.**

The matter is being forwarded to Group Art Unit 3633 for consideration of the amendment filed July 20, 2007 (copy supplied with the instant petition).

Telephone inquiries regarding this decision should be directed to the undersigned at (571)272-3207.

Cliff Congo
Petitions Attorney
Office of Petitions

UNITED STATES PATENT AND TRADEMARK OFFICE

Commissioner for Patents
United States Patent and Trademark Office
P.O. Box 1450
Alexandria, VA 22313-1450
www.uspto.gov

APR 21 2006

Joseph H. Taddeo
The Timberline Office
3446 Timberwood Trail
Richfield, OH 44286-9755

In re Application:
Bruce Pelton
Patent No 6,779,910
Issue Date:August 24, 2004
Attny Docket No. 02057

Decision on Petition

This is a decision on a petition under 37 CFR 1.324 filed September 14, 2005, requesting that the name of the inventors in the patent be corrected.

The petition and verified statement of facts state that an error occurred in the naming of inventors because the contribution of an additional inventor to the invention were inadvertently left off, that the named inventor did not realize that contributions had been made by the additional inventors, Bruce Blady and Bill Jones.

Based on the file record as a whole and the facts as set forth above and in the petition, the error in inventorship occurred without deceptive intent and was diligently corrected.

The 37 C.F.R. 31.324 petition to correct the inventorship is **Granted.**

Sandra L. O'Shea
S.P.E. Art Unit 2875
Technology Center 2800

BEST AVAILABLE COPY

UNITED STATES DEPARTMENT OF COMMERCE
Patent and Trademark Office
ASSISTANT SECRETARY OF COMMERCE AND
COMMISSIONER OF PATENTS AND TRADEMARKS
P.O. Box 1450
Alexandria, VA 22313-1450

April 27, 2006

Patent No.: 6,984,984 B2
Applicant : Hironori Nishizawa, et al.
Issued : January 10, 2006
For : **OPTICAL CAP FOR SEMICONDUCTOR DEVICE**

Re: Request for Certificate of Correction

Consideration has been given your request for the issuance of a certificate of correction for the above-identified patent under the provisions of Rules 1.322 and 1.323.

Inspection of the file of the application for the patent reveals that errors requested to be requested on PTO/SB/44 form are printed in accordance with the record in the Patent and Trademark Office, as passed to issued by the examiner. There being no fault on the part of the Patent and Trademark Office, it has no authority to issue a certificate of correction under the provision of 1.322.

In view of the foregoing, your request for certificate of correction is hereby denied. However, further consideration will be given these matters, upon receipt of a request for certificate of correction under the provisions of 1.323, accompanied by the appropriate fee which is presently $100.

Further correspondence concerning this matter should be filed and directed to Decisions and Certificates of Correction Branch.

Decisions and Certificates of Correction
Antonio Johnson
(703) 308-9390 ext. 111

Staas & Halsey
1201 New York Avenue, N.W. – 7th Floor
Washington, D.C. 20005

UNITED STATES PATENT AND TRADEMARK OFFICE

Commissioner for Patents
United States Patent and Trademark Office
P.O. Box 1450
Alexandria, VA 22313-1450
www.uspto.gov
DIW 08-04

SUGHRUE MION, PLLC
2100 PENNSYLVANIA AVENUE, N.W.
SUITE 800
WASHINGTON DC 20037

COPY MAILED

AUG 2 7 2004

OFFICE OF PETITIONS

In re Application of	:	
Georges et al.	:	
Application No. 10/814,279	:	DECISION ON PETITION
Filed: 1 April, 2004	:	
Attorney Docket No. Q-80598	:	

This is a decision on the petition filed on 28 July, 2004, requesting that the above-identified application be accorded a filing date which is treated as a petition requesting that above-identified application, including three (3) sheets of drawings, be accorded a filing date of 1 April, 2004.

The petition is granted.

On 1 April, 2004, the application was filed.

On 23 July, 2004, Initial Patent Examination Division mailed a Notice of Incomplete Nonprovisional Application, stating that the application had been deposited without drawings, and that application should reconsider whether drawings were necessary under 35 U.S.C. § 113 (first sentence). The Notice stated that the filing date would be the date of receipt of the missing drawings.

In response, on 28 August, 2004, the present petition and a copy of three (3) sheet of drawings, was filed. Petitioners argue that three (3) drawing sheets was filed with the other application papers on 1 April, 2004, but were subsequently misplaced in the U.S. Patent and Trademark Office (Office). In support, a copy of petitioners' postcard receipt was supplied with the present petition. The postcard receipt shows an Office date stamp of 1 April, 2004, and identifies the application by the inventors' names, invention title, and attorney docket number, and acknowledges receipt of, *inter alia*, three (3) sheets of drawings. Petitioners request that the application, including the three (3) sheets drawings, be accorded a filing date of 1 April, 2004.

A review of the record reveals that no sheets of drawings received on 1 April, 2004, are located among the application papers received on that date. However, the evidence is convincing that the application papers deposited on 1 April, 2004, included three (3) sheets of drawings, which were subsequently misplaced in the Office. Therefore, the application, including three (3) sheets of drawings, is entitled to a filing date of 1 April, 2004.

In view of the above, the petition is granted. No petition fee has been charged and none is due.

The application will be processed with the copy of the three (3) sheets of drawings supplied on 28 July, 2004, as a part of the original disclosure.

The application is being returned to Initial Patent Examination Division for further processing with a filing date of 1 April, 2004, using the application papers filed on that date, and the copy of three (3) sheets of drawings supplied with the present petition, and for an indication in Office records that three (3) sheets of drawings were present on filing.

Telephone inquiries should be directed to the undersigned at 703-308-6918.

DWood

Douglas I. Wood
Senior Petitions Attorney
Office of Petitions

UNITED STATES PATENT AND TRADEMARK OFFICE

Commissioner for Patents
United States Patent and Trademark Office
P.O. Box 1450
Alexandria, VA 22313-1450
www.uspto.gov
DIW 09-04

SUGHRUE MION, PLLC
2100 PENNSYLVANIA AVENUE, N.W.
SUITE 800
WASHINGTON DC 20037

COPY MAILED

SEP 10 2004

OFFICE OF PETITIONS

In re Application of	:
Georges et al.	: CORRECTED
Application No. 10/814,279	: DECISION ON PETITION
Filed: 1 April, 2004	:
Attorney Docket No. Q-80598	:

This is a corrected decision on the petition filed on 28 July, 2004, requesting that the above-identified application be accorded a filing date which is treated as a petition requesting that above-identified application, including three (3) sheets of drawings, be accorded a filing date of 1 April, 2004.

The petition is granted.

On 1 April, 2004, the application was filed.

On 23 July, 2004, Initial Patent Examination Division mailed a Notice of Incomplete Nonprovisional Application, stating that the application had been deposited without drawings, and that application should reconsider whether drawings were necessary under 35 U.S.C. § 113 (first sentence). The Notice stated that the filing date would be the date of receipt of the missing drawings.

In response, on 28 July, 2004, the present petition and a copy of three (3) sheet of drawings, was filed. Petitioners argue that three (3) drawing sheets was filed with the other application papers on 1 April, 2004, but were subsequently misplaced in the U.S. Patent and Trademark Office (Office). In support, a copy of petitioners' postcard receipt was supplied with the present petition. The postcard receipt shows an Office date stamp of 1 April, 2004, and identifies the application by the inventors' names, invention title, and attorney docket number, and acknowledges receipt of, *inter alia*, three (3) sheets of drawings. Petitioners request that the application, including the three (3) sheets drawings, be accorded a filing date of 1 April, 2004.

A review of the record reveals that no sheets of drawings received on 1 April, 2004, are located among the application papers received on that date. However, the evidence is convincing that the application papers deposited on 1 April, 2004, included three (3) sheets of drawings, which were subsequently misplaced in the Office. Therefore, the application, including three (3) sheets of drawings, is entitled to a filing date of 1 April, 2004.

In view of the above, the petition is granted. No petition fee has been charged and none is due.

The application will be processed with the copy of the three (3) sheets of drawings supplied on 28 July, 2004, as a part of the original disclosure.

The application is being returned to Initial Patent Examination Division for further processing with a filing date of 1 April, 2004, using the application papers filed on that date, and the copy of three (3) sheets of drawings supplied with the present petition, and for an indication in Office records that three (3) sheets of drawings were present on filing.

Telephone inquiries should be directed to the undersigned at 703-308-6918.

Douglas I. Wood
Senior Petitions Attorney
Office of Petitions

UNITED STATES PATENT AND TRADEMARK OFFICE

Commissioner for Patents
United States Patent and Trademark Office
P.O. Box 1450
Alexandria, VA 22313-1450
www.uspto.gov

STAAS & HALSEY LLP
SUITE 700
1201 NEW YORK AVENUE, N.W.
WASHINGTON, DC 20005

COPY MAILED

JUN 12 2008

OFFICE OF PETITIONS

In re Application of :
Toshikazu Yoshida et al :
Application No. 10/814,282 :
Filed: April 1, 2004 :
Attorney Docket No. 1081.1195

ON PETITION

This is a decision on the petition, filed June 10, 2008 under 37 CFR 1.313(c)(2) to withdraw the above-identified application from issue after payment of the issue fee.

The petition is **GRANTED**.

The above-identified application is withdrawn from issue for consideration of a submission under 37 CFR 1.114 (request for continued examination). See 37 CFR 1.313(c)(2).

Petitioner is advised that the issue fee paid on November 20, 2007 in the above-identified application cannot be refunded. If, however, the above-identified application is again allowed, petitioner may request that it be applied towards the issue fee required by the new Notice of Allowance.[1]

Telephone inquiries should be directed to Irvin Dingle at (571) 272-3210.

This matter is being referred to Technology Center AU 2182 for processing of the request for continued examination under 37 CFR 1.114 and for consideration of the concurrently filed Information Disclosure Statement.

Irvin Dingle
Petitions Examiner
Office of Petitions

---

[1] The request to apply the issue fee to the new Notice may be satisfied by completing and returning the new Issue Fee Transmittal Form PTOL-85(b), which includes the following language thereon: Commissioner for Patents is requested to apply the Issue Fee and Publication Fee (if any) or re-apply any previously paid issue fee to the application identified above. Petitioner is advised that, whether a fee is indicated as being due or not, the Issue Fee Transmittal Form **must** be completed and timely submitted to avoid abandonment. Note the language in bold text on the first page of the Notice of Allowance and Fee(s) Due (PTOL-85).

UNITED STATES PATENT AND TRADEMARK OFFICE

COMMISSIONER FOR PATENTS
UNITED STATES PATENT AND TRADEMARK OFFICE
P.O. BOX 1450
ALEXANDRIA, VA 22313-1450
www.uspto.gov

LERNER GREENBERG STEMER LLP
P O BOX 2480
HOLLYWOOD, FL 33022-2480

COPY MAILED

MAY 18 2006

OFFICE OF PETITIONS

In re Application of	:	
Ehud Mendelson, et al.	:	
Application No. 10/814,309	:	DECISION ON REQUEST
Filed: March 30, 2004	:	TO WITHDRAW
Attorney Docket No. REL-8149 D2	:	FROM RECORD
	:	

This is a decision on the Request to Withdraw as attorney or agent of record under 37 C.F.R. § 1.36(b), filed April 13, 2006.

The request is **APPROVED**.

A grantable request to withdraw as attorney/agent of record must be signed by every attorney/agent seeking to withdraw or contain a clear indication that one attorney is signing on behalf of another/others. A request to withdraw will not be approved unless at least 30 (thirty) days would remain between the date of approval and the later of the expiration date of a time to file a response or the expiration date of the maximum time period which can be extended under 37 C.F.R. § 1.136(a).

The request was signed by Ralph E. Locher on behalf of himself and all the attorneys of record who are associated with Customer No. 24131.

All attorneys/agents associated with the Customer Number 24131 have been withdrawn. Accordingly, there is no attorney of record at this time.

The request to change the correspondence address of record has been accepted. All future communications from the Office will be directed to the assignee at the address below until otherwise properly notified by the applicant.

There is an outstanding Office action mailed January 18, 2006 that requires a reply from the applicant.

Telephone inquiries concerning this decision should be directed to Sherry D. Brinkley at 571-272-3204.

Sherry D. Brinkley
Petitions Examiner
Office of Petitions

Conferee: Amelia Au

cc: U.S.Aviation Technology, LLC
11190 Heron Bay Blvd.
Suite #916
Coral Springs, FL 33076

UNITED STATES PATENT AND TRADEMARK OFFICE

COMMISSIONER FOR PATENTS
UNITED STATES PATENT AND TRADEMARK OFFICE
P.O. BOX 1450
ALEXANDRIA, VA 22313-1450
www.uspto.gov

COPY MAILED

MAY 18 2006

OFFICE OF PETITIONS

LERNER GREENBERG STEMER LLP
P O BOX 2480
HOLLYWOOD, FL 33022-2480

In re Application of	:	
Ehud Mendelson, et al.	:	
Application No. 10/814,310	:	DECISION ON REQUEST
Filed: March 30, 2004	:	TO WITHDRAW
Attorney Docket No. REL-8149 D1	:	FROM RECORD
	:	

This is a decision on the Request to Withdraw as attorney or agent of record under 37 C.F.R. § 1.36(b), filed April 13, 2006.

The request is **APPROVED**.

A grantable request to withdraw as attorney/agent of record must be signed by every attorney/agent seeking to withdraw or contain a clear indication that one attorney is signing on behalf of another/others. A request to withdraw will not be approved unless at least 30 (thirty) days would remain between the date of approval and the later of the expiration date of a time to file a response or the expiration date of the maximum time period which can be extended under 37 C.F.R. § 1.136(a).

The request was signed by Ralph E. Locher on behalf of himself and all the attorneys of record who are associated with Customer No. 24131.

All attorneys/agents associated with the Customer Number 24131 have been withdrawn. Accordingly, there is no attorney of record at this time.

The request to change the correspondence address of record has been accepted. All future communications from the Office will be directed to the assignee at the address below until otherwise properly notified by the applicant.

There is an outstanding Office action mailed March 6, 2006 that requires a reply from the applicant.

Telephone inquiries concerning this decision should be directed to Sherry D. Brinkley at 571-272-3204.

Sherry D. Brinkley
Petitions Examiner
Office of Petitions

Conferee: Amelia Au

cc: U.S.Aviation Technology, LLC
11190 Heron Bay Blvd.
Suite #916
Coral Springs, FL 33076

UNITED STATES PATENT AND TRADEMARK OFFICE

Commissioner for Patents
United States Patent and Trademark Office
P.O. Box 1450
Alexandria, VA 22313-1450
www.uspto.gov

KACVINSKY LLC
C/O INTELLEVATE
P.O. BOX 52050
MINNEAPOLIS MN 55402

COPY MAILED
MAR 2 3 2009
OFFICE OF PETITIONS

In re Application of :
Aldrich, et al. :
Application No. 10/814,312 : DECISION
Filed: 30 March, 2004 :
Attorney Docket No. 1020.P18895 :

This is a decision on the petitions filed on 27 February, 2009, to revive an application under 37 C.F.R. §1.137(b) as having been abandoned due to unintentional delay.

The petition as considered under 37 C.F.R. §1.137(b) is **GRANTED**.

As to Allegations of
Unintentional Delay

The requirements of a grantable petition pursuant to 37 C.F.R. §1.137(b) are the petition and fee therefor, a reply, a proper statement of unintentional delay under the regulation, and, where applicable, a terminal disclaimer and fee. (However, it does not appear that a terminal disclaimer and fee are due here.)

BACKGROUND

The record reflects as follows:

Petitioner failed to reply timely and properly to the non-final Office action mailed on 5 April, 2007, with reply due absent extension of time on or before 5 July, 2007.

(There is some lack of clarity as to under whose control the application was at the time of abandonment, however, the non-final Office action was mailed to a Customer Number (59796) associated with the address consistent in part with that above (i.e., C/O Intellevate, P.O. Box 52050, Minneapolis MN 55402)—although the Customer Number was not that present number

(57035), and the attorney/agent associated with that Customer Number appears not to have been firm that filed the application (i.e., Blakely Sokoloff Taylor Zafman LLP, which was associated with Customer Number 08791).)

The application went abandoned after midnight 5 July, 2007.

The Office mailed a Notice of Abandonment on 14 November, 2007.

On 27 February, 2009, Petitioner John F. Kacvinsky (Reg. No. 40,040) filed, *inter alia*, a petition (with fee) pursuant to 37 C.F.R. §1.137(b) averring unintentional delay, a reply in the form of an amendment, and made the statement of unintentional delay.

> *It is not apparent whether the person signing the statement of unintentional delay was in a position to have firsthand or direct knowledge of the facts and circumstances of the delay at issue.*
>
> *Nevertheless, such statement is being treated as having been made as the result of a reasonable inquiry into the facts and circumstances of such delay.*[1] *In the event that such an inquiry has not been made, Petitioner* ***must*** *make such an inquiry.*
>
> *If such inquiry results in the discovery that it is not correct that the entire delay in filing the required reply from the due date for the reply until the filing of a grantable petition pursuant to 37 C.F.R. §1.137(b) was unintentional, Petitioner* ***must*** *notify the Office.*

The record (including the petition filed on 27 February, 2009) does not necessitate a finding that the delay between midnight 5 July, 2007 (date of abandonment), and 27 February, 2008 (date of filing of grantable petition), was not unintentional.

Rather, the Patent and Trademark Office is relying in this matter on the duty of candor and good faith of Petitioner's Counsel John F. Kacvinsky (Reg. No. 40,040) when accepting Petitioner's representation that the delay in filing the response was unintentional.[2]

The availability of applications and application papers online to applicants/practitioners who diligently associate their Customer Number with the respective application(s) now provides an applicant/practitioner on-demand information as to events/transactions in an application.

Out of an abundance of caution, Petitioners always are reminded that those registered to practice and all others who make representations before the Office **must** inquire into the underlying facts

---

[1] See 37 C.F.R. §10.18(b) and Changes to Patent Practice and Procedure; Final Rule Notice, 62 Fed. Reg. 53131, 53178 (October 10, 1997), 1203 Off. Gaz. Pat. Office 63, 103 (October 21, 1997).

[2] See Changes to Patent Practice and Procedure, 62 Fed. Reg. at 53160 and 53178, 1203 Off. Gaz. Pat. Office at 88 and 103 (responses to comments 64 and 109) (applicant obligated under 37 C.F.R. §10.18 to inquire into the underlying facts and circumstances when providing the statement required by 37 C.F.R. §1.137(b) to the Patent and Trademark Office).

of representations made to the Office and support averments with the appropriate documentation–since all owe to the Office the continuing duty to disclose.[3]

STATUTES, REGULATIONS AND ANALYSIS

Congress has authorized the Commissioner to "revive an application if the delay is shown to the satisfaction of the Commissioner to have been "unavoidable." 35 U.S.C. §133 (1994).[4] The regulations at 37 C.F.R. §1.137(a) and (b) set forth the requirements for a Petitioner to revive a previously unavoidably or unintentionally, respectively, abandoned application under this congressional grant of authority.

Unintentional delays are those that do not satisfy the very strict statutory and regulatory requirements of unavoidable delay, and also, by definition, are not intentional.[5]))

As to Allegations of Unintentional Delay

It appears that the requirements under 37 C.F.R. §1.137(b) have been satisfied.

CONCLUSION

Accordingly, the petition under 37 C.F.R. §1.137(b) is **granted**.

The instant application is released to the Technology Center/AU 2183 for further processing in due course.

Petitioner may find it beneficial to view Private PAIR within a fortnight of the instant decision to ensure that the revival has been acknowledged by the TC/AU in response to this decision. It is noted that all inquiries with regard to that change in status need be directed to the TC/AU where that change of status must be effected—that does not occur in the Office of Petitions.

---

[3] See supplement of 17 June, 1999. The Patent and Trademark Office is relying on petitioner's duty of candor and good faith and accepting a statement made by Petitioner. See Changes to Patent Practice and Procedure, 62 Fed. Reg. at 53160 and 53178, 1203 Off. Gaz. Pat. Office at 88 and 103 (responses to comments 64 and 109)(applicant obligated under 37 C.F.R. §10.18 to inquire into the underlying facts and circumstances when providing statements to the Patent and Trademark Office).

[4] 35 U.S.C. §133 provides:

35 U.S.C. §133 Time for prosecuting application.

Upon failure of the applicant to prosecute the application within six months after any action therein, of which notice has been given or mailed to the applicant, or within such shorter time, not less than thirty days, as fixed by the Commissioner in such action, the application shall be regarded as abandoned by the parties thereto, unless it be shown to the satisfaction of the Commissioner that such delay was unavoidable.

[5] Therefore, by example, an unintentional delay in the reply might occur if the reply and transmittal form are to be prepared for shipment by the US Postal Service, but other pressing matters distract one's attention and the mail is not timely deposited for shipment.

Telephone inquiries regarding this decision may be directed to the undersigned at (571) 272-3214—it is noted, however, that all practice before the Office is in writing (see: 37 C.F.R. §1.2[6]) and the proper authority for action on any matter in this regard are the statutes (35 U.S.C.), regulations (37 C.F.R.) and the commentary on policy (MPEP). Therefore, no telephone discussion may be controlling or considered authority for Petitioner's action(s).

/John J. Gillon, Jr./
John J. Gillon, Jr.
Senior Attorney
Office of Petitions

[6] The regulations at 37 C.F.R. §1.2 provide:
§1.2 Business to be transacted in writing.
All business with the Patent and Trademark Office should be transacted in writing. The personal attendance of applicants or their attorneys or agents at the Patent and Trademark Office is unnecessary. The action of the Patent and Trademark Office will be based exclusively on the written record in the Office. No attention will be paid to any alleged oral promise, stipulation, or understanding in relation to which there is disagreement or doubt.

UNITED STATES PATENT AND TRADEMARK OFFICE

Commissioner for Patents
United States Patent and Trademark Office
P.O. Box 1450
Alexandria, VA 22313-1450
www.uspto.gov

Frank M. Scutch
MILLER JOHNSON SNELL CUMMISKEY, PLC
800 Calder Plaza Building
250 Monroe Ave. N W
Grand Rapids, MI 49503-2250

MAILED

MAY 3 1 2005

Technology Center 2100

In re Application of:
Mark A. Boerger
Application No. 10/814,315
Filed: March 31, 2004
For: SYSTEM AND METHOD FOR COMMUNICATING WITH A KEY VARIABLE LOADER (KVL) USING A STANDARD UNIVERSAL ASYNCHRONOUS RECEIVER TRANSMITTER (UART) PERIPHERAL

DECISION ON REQUEST TO WITHDRAW AS ATTORNEY OR AGENT

This is a decision on the Request To Withdraw from Representation filed December 17, 2004.

A grantable request to withdraw as attorney of record should indicate thereon the present mailing addresses of the attorney(s) who is/are withdrawing from the record and of the applicant. The request for withdrawal must be signed by every attorney seeking to withdraw or contain a clear indication that one attorney is signing on behalf of another/others. A request to withdraw will not be approved unless at least 30 (thirty) days would remain between the date of approval and the later of the expiration date of a time to file a response or the expiration date of the maximum time period which can be extended under 37 C.F.R. § 1. 136(a). The effective date of withdrawal being the date of decision and not the date of request. See M.P.E.P. § 402.06. 37 C.F.R. § 1.36 further requires that the applicant or patent owner be notified of the withdrawal of the attorney or agent.

The request is **GRANTED**.

All future communications from the Office will be directed to the below-listed address until otherwise notified by applicant. This correspondence address is provided by the withdrawn attorney(s). Applicant is reminded of the obligation to promptly notify the Patent and Trademark Office (Office) of any change in correspondence address to ensure receipt of all communications from the Office.

for

Vincent N. Trans
Special Program Examiner
Technology Center 2100

5/6/05

Cc: MOTOROLA, INC.
8000 West Sunrise Boulevard
Room 1610
Plantation, Florida 33322-9947

UNITED STATES PATENT AND TRADEMARK OFFICE

Commissioner for Patents
United States Patent and Trademark Office
P.O. Box 1450
Alexandria, VA 22313-1450
www.uspto.gov

KENNETH E. HORTON
KIRTON & MCCONKLE
60 EAST SOUTH TEMPLE
SUITE 1800
SALTLAKE CITY UT 84111

COPY MAILED

FEB 17 2009

OFFICE OF PETITIONS

In re Application of	:	
Wortley et al.	:	
Application No. 10/814,318	:	DECISION ON PETITION
Filed: March 31, 2004	:	
Attorney Docket No. 11984.6	:	

This is a decision on the petition under the unintentional provisions of 37 CFR 1.137(b), filed April 2, 2008, to revive the above-identified application.

The petition is **GRANTED**.

This application became abandoned for failure to timely reply to the final Office action mailed August 10, 2007. A two-month extension of time under the provisions of 37 CFR 1.136(a) was timely obtained. Accordingly, this application became abandoned on January 11, 2008.

The petition satisfies the requirements of 37 CFR 1.137(b) in that petitioner has supplied (1) the reply in the form of a Request for Continued Examination (RCE) and fee of $405.00, and the submission required by 37 CFR 1.114; (2) the petition fee of $770.00; and (3) a proper statement of unintentional delay.

Additionally, an extension of time under 37 CFR 1.136 must be filed prior to the expiration of the maximum extendable period for reply. *See* In re Application of S., 8 USPQ2d 1630, 1631 (Comm'r Pats. 1988). Since the partial $295.00, three- month extension of time fee submitted with the petition on April 2, 2008 was subsequent to the maximum extendable period for reply, this fee is unnecessary and will be refunded to petitioner's deposit account, as authorized, in due course.

Telephone inquiries concerning this decision should be directed to Joan Olszewski at (571) 272-7751.

The file is now being forwarded to Technology Center 3734 for processing of the Request for Continued Examination under 37 CFR 1.114 filed with the instant petition.

/Liana Walsh/
Liana Walsh
Petitions Examiner
Office of Petitions

IFW

OIPE JC68
OCT 0 4 2004
PATENT & TRADEMARK OFFICE

IN THE UNITED STATES PATENT AND TRADEMARK OFFICE

In re Application No. 10/814,320	Group Art Unit 1772
Filed: March 31, 2004	Examiner: MIGGINS, M
Applicants: Paul Philip BROWN et al.	Attorney Dkt. No. 155-20
For: INJECTION MOLDING OF NESTABLE THIN-WALL PLASTIC PRODUCTS	Confirmation No. 5169

Commissioner for Patents
P.O. Box 1450
Alexandria, VA 22313-1450

PETITION TO MAKE SPECIAL BASED UPON APPLICANT'S AGE

Applicants petition that the above-identified application be granted special status for accelerated examination in accordance with 37 CFR 1.102(c) and MPEP Sec. 708.02, part IV.

Co-Applicant Jens Ole Sorensen became 65 years of age on May 11, 2004. His Declaration stating his age and his date and place of birth is attached hereto.

No petition fee is required for a petition to make special based upon an applicant's age.

Respectfully submitted,

Dated 9-29-04

Edward W. Callan

Edward W. Callan
Attorney for Applicants
Attorney Registration No. 24,720

Customer No. 22653
3830 Valley Centre Drive, No. 705, PMB 452
San Diego, California 92130

Telephone: (858) 259-5533
Facsimile: (858) 259-5537
Email: ecallan1@san.rr.com

NOV 30 2004
10/814320
PETITION GRANTED

R Crispino

Richard Crispino
Special Program Examiner
TC 1700

UNITED STATES PATENT AND TRADEMARK OFFICE

Commissioner for Patents
United States Patent and Trademark Office
P.O. Box 1450
Alexandria, VA 22313-1450
www.uspto.gov

JUL 2 2 2004

DCM

In re Application of	:	
Dan Duke, et al.	:	
Serial Number: 10/814,324	:	PETITION UNDER
Filed: March 31, 2004	:	M.P.E.P.708.02 V
For: COOLING WATER SCALE AND CORROSION	:	
INHIBITION	:	

This is in response to the petition filed May 6, 2004, requesting that the above-identified application be granted Special Status under Section 708.02 V of the MPEP and 37 CFR 1.102(c) **(no fee required)**.

The request for Special Status considered under Section 708.02 V is granted because criteria under 37 CFR 1.102(c) has been met.

Accordingly the petition is **GRANTED.**

Marian C Knode

Marian C. Knode, Special Programs Examiner
Technology Center 1700
Chemical and Materials Engineering

MATTHEW A. NEWBOLES
STETINA BRUNDA GARRED & BRUCKER
Suite 250
75 Enterprise
Aliso Viejo CA 92656

SPE RESPONSE FOR CERTIFICATE OF CORRECTION

Paper No.:20070626

DATE : June 26, 2007

TO SPE OF : ART UNIT 1751

SUBJECT : Request for Certificate of Correction on Patent No.: 7,198,650 B2

A response is requested with respect to the accompanying request for a certificate of correction.

Please complete this form and return with file, within **7** days to:
Certificates of Correction Branch - PK 3-910
Palm location **7590** - Tel. No. 305-8201

With respect to the change(s) requested, correcting Office and/or Applicant's errors, should the patent read as shown in the certificate of correction? No new matter should be introduced, nor should the scope or meaning of the claims be changed.

Thank You For Your Assistance **Certificates of Correction Branch**

The request for issuing the above-identified correction(s) is hereby:
Note your decision on the appropriate box.

☒ **Approved** **All** changes apply.

☐ **Approved in Part** Specify below which changes **do not** apply.

☐ **Denied** State the reasons for denial below.

Comments:

Douglas McGinty

SPE: Douglas McGinty **Art Unit** 1751

UNITED STATES PATENT AND TRADEMARK OFFICE

Commissioner for Patents
United States Patent and Trademark Office
P.O. Box 1450
Alexandria, VA 22313-1450
www.uspto.gov

FOX ROTHSCHILD LLP
PRINCETON PIKE CORPORATE CENTER
997 LENOX DRIVE, BUILDING #3
LAWRENCEVILLE NJ 08648

COPY MAILED

JAN 11 2007

OFFICE OF PETITIONS

In re Application of	:
Donald Wayne Howell et al	:
Application No. 10/814,341	: DECISION GRANTING PETITION
Filed: April 1, 2004	: UNDER 37 CFR 1.137(b)
Attorney Docket No. 112325.133 US3	:

This is a decision on the petition under 37 CFR 1.137(b), filed August 31, 2006, to revive the above-identified application.

The petition is **GRANTED**.

The petition satisfies the conditions for revival pursuant to the provisions of 37 CFR 1.137(b) in that (1) the reply in the form of an RCE and an amendment; (2) the petition fee; and (3) the required statement of unintentional delay have been received. Accordingly, the reply to the Final Rejection of October 14, 2005, is accepted as having been unintentionally delayed.

Pursuant to 37 CFR 1.136, an extension of time must be filed prior to the expiration of the maximum period obtainable for reply to avoid abandonment. Accordingly, since the $510 extension of time submitted with the petition on August 31, 2006 was subsequent to the maximum period obtainable for reply, this fee is unnecessary and will be credited to petitioner's deposit account.

Telephone inquiries concerning this decision should be directed to the undersigned at (571) 272-3208.

This matter is being referred to Technology Center AU 2857.

Karen Creasy

Karen Creasy
Petitions Examiner
Office of Petitions

UNITED STATES PATENT AND TRADEMARK OFFICE

Commissioner for Patents
United States Patent and Trademark Office
P.O. Box 1450
Alexandria, VA 22313-1450
www.uspto.gov

Wong, Cabello, Lutsch, Rutherford & Brucculeri, LLP
20333 SH 249
Suite 600
Houston, TX 77070

COPY MAILED

SEP 30 2008

OFFICE OF PETITIONS

In re Application of :
Michael Kenoyer et al. :
Application No. 10/814,364 : ON PETITION
Filed: March 31, 2004 :
Attorney Docket No. 199-0042US-C2 :

This is a decision on the petition under the unintentional provisions of 37 CFR 1.137(b), filed December 14, 2006, to revive the above-identified application.

The petition is **GRANTED**.

The application became abandoned for failure to timely file a reply within the meaning of 37 CFR 1.113 to the final Office action of June 13, 2006. The proposed reply required for consideration of a petition to revive must be a Notice of Appeal (and appeal fee required by 37 CFR 41.20(b)(2), an amendment that *prima facie* places the application in condition for allowance, a Request for Continued Examination and submission (37 CFR 1.114), or the filing of a continuing application under 37 CFR 1.53(b). See MPEP 711.03(c)(II)(A)(2). No extensions of time were obtained. Accordingly, the date of abandonment of this application is September 14, 2006. A Notice of Abandonment was mailed on May 10, 2007.

The petition satisfies the requirements of 37 CFR 1.137(b) in that petitioner has supplied (1) the reply in the form of a continuing application under 37 CFR 1.53(b), (2) the petition fee of $1500, and (3) a proper statement of unintentional delay. Accordingly, the filing of a continuing application under 37 CFR 1.53(b) is accepted as being unintentionally delayed.

The application is being revived solely for purposes of continuity. As continuity has been established by this decision reviving the application, the application is again abandoned in favor of a continuing application under 37 CFR 1.53(b).

Telephone inquiries concerning this decision should be directed to Kimberly Inabinet at (571) 272-4618.

Carl Friedman
Petitions Examiner
Office of Petitions

UNITED STATES PATENT AND TRADEMARK OFFICE

Commissioner for Patents
United States Patent and Trademark Office
P.O. Box 1450
Alexandria, VA 22313-1450
www.uspto.gov

WONG, CABELLO, LUTSCH, RUTHERFORD & BRUCCULERI, L.L.P.
20333 SH 249
SUITE 600
HOUSTON TX 77070

RECEIVED
DEC 3 0 2008
OFFICE OF PETITIONS

In re Application of	:	
Michael Kenoyer et al	:	CORRECTED DECISON
Application No. 10/814,364	:	ON PETITION
Filed: March 31, 2004	:	
Attorney Docket No. 199-0042US-C2	:	

This is a decision on the petition under 37 CFR 1.137(b), filed December 14, 2006, to revive the above-identified application.

The petition decision mailed September 30, 2008 is **VACATED**.

The petition is **DISMISSED**.

Any request for reconsideration of this decision must be submitted within TWO (2) MONTHS from the mail date of this decision. Extensions of time under 37 CFR 1.136(a) are permitted. The reconsideration request should include a cover letter entitled "Renewed Petition under 37 CFR 1.137(b)." This is **not** a final agency action within the meaning of 5 U.S.C. § 704.

The application became abandoned for failure to timely file a reply within the meaning of 37 CFR 1.113 to the final Office action of June 13, 2006. The proposed reply required for consideration of a petition to revive must be a Notice of Appeal (and appeal fee required by 37 CFR 41.20(b)(2), an amendment that prima facie places the application in condition for allowance, a Request for Continued Examination and submission (37 CFR 1.114), or the filing of a continuing application under 37 CFR 1.53(b). See MPEP 711.03(c)(II)(A)(2). Accordingly, the date of abandonment of this application is September 14, 2006.

A grantable petition under 37 CFR 1.137(b) must be accompanied by: (1) the required reply, unless previously filed; (2) the petition fee as set forth in 37 CFR 1.17(m); (3) a statement that

the entire delay in filing the required reply from the due date for the reply until the filing of a grantable petition pursuant to 37 CFR 1.137(b) was unintentional; and (4) any terminal disclaimer (and fee as set forth in 37 CFR 1.20(d)) required by 37 CFR 1.137(d). Where there is a question as to whether either the abandonment or the delay in filing a petition under 37 CFR 1.137 was unintentional, the Commissioner may require additional information. See MPEP 711.03(c)(III)(C) and (D). The instant petition lacks item(s) (1).

The form PTO/SB/64 indicates that the response submitted with the instant petition is in the form of a continuation application; however, the papers filed with the instant petition and purporting to be a continuing application do not constitute a complete application within the meaning of 37 CFR § 1.53(b).

37 CFR § 1.53(b) states, in pertinent part:

"Application filing requirements – Nonprovisional application. The filing date of an application for patent filed under this section, except for a provisional application under paragraph (c) of this section or a continued prosecution application under paragraph (d) of this section, is the date on which a specification as prescribed by 35 U.S.C. § 112 containing a description pursuant by § 1.71 and at least one claim pursuant to § 1.75, and any drawing required by § 1.81(a) are filed in the Patent and Trademark Office.

As such, petitioner will not obtain the desired copendency of applications until papers meeting the minimum requirements of 37 CFR § 1.53(b) to obtain a filing date are received by the Office.

Application number 11/611,014 has been assigned to the papers accompanying the instant petition. Any papers attempting to comply with 37 CFR § 1.53(b) should be addressed to the '014' application. Any reply to the instant decision in the form of a renewed petition should be directed to parent file 10/814,364.

Further correspondence with respect to this matter should be addressed as follows:

By Mail:
Mail Stop PETITION
Commissioner for Patents
P. O. Box 1450
Alexandria, VA 22313-1450

By hand:
U. S. Patent and Trademark Office
Customer Service Window, Mail Stop Petitions
Randolph Building
401 Dulany Street
Alexandria, VA 22314

The centralized facsimile number is **(571) 273-8300.**

Telephone inquiries concerning this decision should be directed to Kimberly Inabinet at (571) 272-4618.

Carl Friedman
Petitions Examiner
Office of Petitions

UNITED STATES PATENT AND TRADEMARK OFFICE

Commissioner for Patents
United States Patent and Trademark Office
P.O. Box 1450
Alexandria, VA 22313-1450
www.uspto.gov

Wong, Cabello, Lutsch, Rutherford & Brucculeri, LLP
20333 SH 249
Suite 600
Houston, TX 77070

COPY MAILED

FEB 17 2009

OFFICE OF PETITIONS

In re Application of	:	
Michael Kenoyer et al.	:	
Application No. 10/814,364	:	ON PETITION
Filed: March 31, 2004	:	
Attorney Docket No. 199-0042US-C2	:	

This is a decision on the petition under the unintentional provisions of 37 CFR 1.137(b), filed January 6, 2009, to revive the above-identified application.

The petition is **GRANTED**.

The application became abandoned for failure to timely file a reply within the meaning of 37 CFR 1.113 to the final Office action of June 13, 2006. The proposed reply required for consideration of a petition to revive must be a Notice of Appeal (and appeal fee required by 37 CFR 41.20(b)(2), an amendment that *prima facie* places the application in condition for allowance, a Request for Continued Examination and submission (37 CFR 1.114), or the filing of a continuing application under 37 CFR 1.53(b). See MPEP 711.03(c)(II)(A)(2). No extensions of time were obtained. Accordingly, the date of abandonment of this application is September 14, 2006. A Notice of Abandonment was mailed on May 10, 2007.

The petition satisfies the requirements of 37 CFR 1.137(b) in that petitioner has supplied (1) the reply in the form of a continuing application under 37 CFR 1.53(b), (2) the petition fee of $1620, and (3) a proper statement of unintentional delay. Accordingly, the filing of a continuing application under 37 CFR 1.53(b) is accepted as being unintentionally delayed.

The application is being revived solely for purposes of continuity. As continuity has been established by this decision reviving the application, the application is again abandoned in favor of a continuing application under 37 CFR 1.53(b).

Telephone inquiries concerning this decision should be directed to Kimberly Inabinet at (571) 272-4618.

Carl Friedman
Petitions Examiner
Office of Petitions

UNITED STATES PATENT AND TRADEMARK OFFICE

Commissioner for Patents
United States Patent and Trademark Office
P.O. Box 1450
Alexandria, VA 22313-1450
www.uspto.gov

GOOGLE / FENWICK
SILICON VALLEY CENTER
801 CALIFORNIA ST.
MOUNTAIN VIEW CA 94041

COPY MAILED

SEP 27 2007

OFFICE OF PETITIONS

In re Application of	:	
Omar Habib Khan et al	:	
Application No. 10/814,365	:	DECISION ON PETITION
Filed: March 31, 2004	:	UNDER 37 CFR 1.137(b)
Attorney Docket No. 24207-10084	:	

This is a decision on the petition, filed July 30, 2007, which is being treated as a petition under 37 CFR 1.137(b) to revive the instant nonprovisional application for failure to timely notify the U.S. Patent and Trademark (USPTO) of the filing of an application in a foreign country, or under a multinational treaty that requires publication of applications eighteen months after filing. *See* 37 CFR 1.137(f).

The petition is **GRANTED**.

Petitioner states that the instant nonprovisional application is the subject of an application filed in an eighteen-month publication country on March 30, 2005. However, the USPTO was unintentionally not notified of this filing within 45 days subsequent to the filing of the subject application in an eighteen-month publication country.

In view of the above, this application became abandoned pursuant to 35 U.S.C. § 122(b)(2)(B)(iii) and 37 CFR 1.213(c) for failure to timely notify the Office of the filing of an application in a foreign country or under a multilateral international agreement that requires publication of applications 18 months after filing.

A petition to revive an application abandoned pursuant to 35 U.S.C. 122(b)(2)(B)(iii) for failure to notify the USPTO of a foreign filing must be accompanied by:

(1) the required reply which is met by the notification of such filing in a foreign country or under a multinational treaty;
(2) the petition fee as set forth in 37 CFR 1.17(m); and
(3) a statement that the entire delay in filing the required reply from the due date of the reply until the filing of a grantable petition was unintentional.

The instant petition has been found to be in compliance with 37 CFR 1.137(b). Accordingly, the failure to timely notify the USPTO of a foreign or international filing within 45 days after the date of filing of such foreign or international application as provided by 35 U.S.C. § 122(b)(2)(B)(iii) and 37 CFR 1.213(c) is accepted as having been unintentionally delayed.

The previous Request and Certification under 35 U.S.C. § 122(b)(2)(B)(i) has been rescinded. A Communication Regarding Rescission of Nonpublication Request and/or Notice of Foreign Filing, which sets forth the projected publication date of January 3, 2008, has been mailed under separate cover.

Telephone inquiries concerning this decision should be directed to the undersigned at (571) 272-3218.

A non-final Office action was mailed on August 1, 2007, which set a shortened statutory period of three (3) months for reply. Failure to timely reply will result in the abandonment of the application.

Frances Hicks
Petitions Examiner
Office of Petitions

UNITED STATES PATENT AND TRADEMARK OFFICE

Commissioner for Patents
United States Patent and Trademark Office
P.O. Box 1450
Alexandria, VA 22313-1450
www.uspto.gov

MAILED

JUN 2 5 2005

Technology Center 2100

PATENT DEPARTMENT - 53051
KILPATRICK STOCKTON LLP
1001 WEST FOURTH STREET
WINSTON-SALEM, NC 27101

In re Application of:
Stephen R. LAWRENCE, et al.
Application No. 10/814,368
Filed: March 31, 2004
For: SYSTEMS AND METHODS FOR CONSTRUCTING AND USING A USER PROFILE

DECISION ON REQUEST TO WITHDRAW AS ATTORNEY OR AGENT

This is a decision on the Request For Withdrawal As Attorney Under 37 CFR § 1.36 and 0.40(c) filed March 10, 2005.

A Revocation And Substitution Of Power Of Attorney Under 37 CFR § 1.36 was filed on April 19, 2005. The Power Of Attorney revoked all prior Powers Of Attorney and appointed Fenwick & West LLP as the attorney(s) of record of the instant application. The Power of Attorney of April 19, 2005 was accepted. Accordingly, all communications from the U.S. Patent and Trademark Office to applicant are to be conducted by Fenwick & West LLP.

For the above stated reasons, the request is **DISMISSED AS MOOT**.

No further communication to you regarding this application will be made.

For Vincent N. Trans
Special Program Examiner
Technology Center 2100
Computer Architecture, Software, and Information Security
571-272-3613

UNITED STATES PATENT AND TRADEMARK OFFICE

Commissioner for Patents
United States Patent and Trademark Office
P.O. Box 1450
Alexandria, VA 22313-1450
www.uspto.gov

GOOGLE / FENWICK
SILICON VALLEY CENTER
801 CALIFORNIA ST.
MOUNTAIN VIEW CA 94041

COPY MAILED

AUG 2 2 2007

OFFICE OF PETITIONS

In re Application of	:	
Lawrence et al.	:	
Application No. 10/814,368	:	DECISION GRANTING PETITION
Filed: March 31, 2004	:	UNDER 37 CFR 1.137(b)
Attorney Docket No. 24207-10083	:	

This is a decision on the petition, filed July 30, 2007, which is being treated as a petition under 37 CFR 1.137(b) to revive the instant non-provisional application for failure to timely notify the U.S. Patent and Trademark (USPTO) of the filing of an application in a foreign country, or under a multinational treaty that requires publication of applications eighteen months after filing. *See* 37 CFR 1.137(f).

The petition is **GRANTED**.

Petitioner states that the instant nonprovisional application is the subject of an application filed in an eighteen-month publication country on March 30, 2005. However, the USPTO was unintentionally not notified of this filing within 45 days subsequent to the filing of the subject application in an eighteen-month publication country.

In view of the above, this application became abandoned pursuant to 35 U.S.C. § 122(b)(2)(B)(iii) and 37 CFR 1.213(c) for failure to timely notify the Office of the filing of an application in a foreign country or under a multilateral international agreement that requires publication of applications 18 months after filing.

A petition to revive an application abandoned pursuant to 35 U.S.C. 122(b)(2)(B)(iii) for failure to notify the USPTO of a foreign filing must be accompanied by:

(1) the required reply which is met by the notification of such filing in a foreign country or under a multinational treaty;
(2) the petition fee as set forth in 37 CFR 1.17(m); and
(3) a statement that the entire delay in filing the required reply from the due date of the reply until the filing of a grantable petition was unintentional.

The instant petition has been found to be in compliance with 37 CFR 1.137(b). Accordingly, the failure to timely notify the USPTO of a foreign or international filing within 45 days after the date of filing of such foreign or international application as provided by 35 U.S.C. § 122(b)(2)(B)(iii) and 37 CFR 1.213(c) is accepted as having been unintentionally delayed.

The previous Request and Certification under 35 U.S.C. § 122(b)(2)(B)(i) has been rescinded. A Notice Regarding Rescission of Nonpublication Request which sets forth the projected publication date of November 29, 2007, accompanies this decision on petition.

This application is being forwarded to Technology Center AU 2167 to await a reply to the outstanding final Office action mailed April 20, 2007. Failure to timely reply will again result in the abandonment of the application.

Telephone inquiries concerning this decision should be directed to the undersigned at (571) 272-3206.

Liana Walsh
Petitions Examiner
Office of Petitions

ATTACHMENT: Notice Regarding Rescission of Nonpublication Request

UNITED STATES PATENT AND TRADEMARK OFFICE

UNITED STATES DEPARTMENT OF COMMERCE
United States Patent and Trademark Office
Address: COMMISSIONER FOR PATENTS
P.O. Box 1450
Alexandria, Virginia 22313-1450
www.uspto.gov

APPLICATION NUMBER	FILING/RECEIPT DATE	FIRST NAMED APPLICANT	ATTY. DOCKET NO.
10/814,368	03/31/2004	Stephen R. Lawrence	24207-10083

CONFIRMATION NO. 7762

62296
GOOGLE / FENWICK
SILICON VALLEY CENTER
801 CALIFORNIA ST.
MOUNTAIN VIEW, CA 94041

Date Mailed: 08/22/2007

Communication Regarding Rescission Of Nonpublication Request and/or Notice of Foreign Filing

Applicant's rescission of the previously-filed nonpublication request and/or notice of foreign filing is acknowledged. The paper has been reflected in the Patent and Trademark Office's (USPTO's) computer records so that the earliest possible projected publication date can be assigned.

The projected publication date is 11/29/2007.

If applicant rescinded the nonpublication request before or on the date of "foreign filing,"[1] then no notice of foreign filing is required.

If applicant foreign filed the application after filing the above application and before filing the rescission, and the rescission did not also include a notice of foreign filing, then a notice of foreign filing (not merely a rescission) is required to be filed within 45 days of the date of foreign filing. See 35 U.S.C. § 122(b)(2)(B)(iii), and Clarification of the United States Patent and Trademark Office's Interpretation of the Provisions of 35 U.S.C. § 122(b)(2)(B)(ii)-(iv), 1272 Off. Gaz. Pat. Office 22 (July 1, 2003).

If a notice of foreign filing is required and is not filed within 45 days of the date of foreign filing, then the application becomes abandoned pursuant to 35 U.S.C. § 122(b)(2)(B)(iii). In this situation, applicant should either file a petition to revive or notify the Office that the application is abandoned. See 37 CFR 1.137(f). Any such petition to revive will be forwarded to the Office of Petitions for a decision. Note that the filing of the petition will not operate to stay any period of reply that may be running against the application.

Questions regarding petitions to revive should be directed to the Office of Petitions at (571) 272-3282. Questions regarding publications of patent applications should be directed to the patent application publication hotline at (703) 605-4283 or by e-mail pgpub@uspto.gov.

[1] Note, for purpose of this notice, that "foreign filing" means "filing an application directed to the same invention in another country, or under a multilateral international agreement, that requires publication of applications 18 months after filing".

UNITED STATES PATENT AND TRADEMARK OFFICE

Commissioner for Patents
United States Patent and Trademark Office
P.O. Box 1450
Alexandria, VA 22313-1450
www.uspto.gov

PATENT DEPARTMENT – 53051
KILPATRICK STOCKTON LLP
1001 WEST FOURTH STREET
WINSTON-SALEM, NC 27101

MAILED

JUN 0 5 2005

Technology Center 2100

In re Application of:
Mihai Florin IONESCU, et al.
Application No. 10/814,387
Filed: March 31, 2004
For: METHODS AND SYSTEMS FOR INTERFACING APPLICATIONS WITH A SEARCH ENGINE

DECISION ON REQUEST TO WITHDRAW AS ATTORNEY OR AGENT

This is a decision on the Request For Withdrawal As Attorney Under 37 CFR § 1.36 and 0.40(c) filed March 10, 2005.

A Revocation And Substitution Of Power Of Attorney Under 37 CFR § 1.36 was filed on April 20, 2005. The Power Of Attorney revoked all prior Powers Of Attorney and appointed Fenwick & West LLP as the attorney(s) of record of the instant application. The Power of Attorney of April 20, 2005 was accepted. Accordingly, all communications from the U.S. Patent and Trademark Office to applicant are to be conducted by Fenwick & West LLP.

For the above stated reasons, the request is **DISMISSED AS MOOT**.

No further communication to you regarding this application will be made.

For Vincent N. Trans
Special Program Examiner
Technology Center 2100
Computer Architecture, Software, and
Information Security
571-272-3613

cc: FENWICK & WEST LLP
SILICON VALLEY CENTER
801 CALIFORNIA STREET
MOUNTAIN VIEW, CA 94041

UNITED STATES PATENT AND TRADEMARK OFFICE

Commissioner for Patents
United States Patent and Trademark Office
P.O. Box 1450
Alexandria, VA 22313-1450
www.uspto.gov

FEB - 1 2005

PAUL G. LUNN, ESQ. NASTECH PHARMACEUTICAL COMPANY INC.
3450 MONTE VILLA PARKWAY
BOTHELL WA 98021-8906

In re Application of	:
Steven C. Quay et al	:
Serial No.: 10/814,399	: PETITION TO MAKE SPECIAL
Filed: March 31, 2004	:
Attorney Docket No.: 03-02CIP	:

This is in response to applicants' petition filed January 10, to make the above-identified application special under the provisions of 37 CFR 1.102(d).

It is presumed that the petition is filed under Section VIII of M.P.E.P. 708.02. The section provides that an application may be made special if the following criteria are met:

> (A) Submits a petition to make special accompanied by the fee set forth in 37 CFR 1.17(h);
> (B) Presents all claims directed to a single invention, or if the Office determines that all the claims presented are not obviously directed to a single invention, will make an election without traverse as a prerequisite to the grant of special status. The election may be made by applicant at the time of filing the petition for special status. Should applicant fail to include an election with the original papers or petition and the Office determines that a requirement should be made, the established telephone restriction practice will be followed.
> (C) Submits a statement(s) that a pre-examination search was made, listing the field of search by class and subclass, publication, Chemical Abstracts, foreign patents, etc. The pre-examination search must be directed to the invention as claimed in the application for which special status is requested. A search made by a foreign patent office satisfies this requirement if the claims in the corresponding foreign application are of the same or similar scope to the claims in the U.S. application for which special status is requested;
> (D) Submits one copy each of the references deemed most closely related to the subject matter encompassed by the claims if said references are not already of record; and
> (E) Submits a detailed discussion of the references, which discussion points out, with the particularity required by 37 CFR 1.111 (b) and (c), how the claimed subject matter is patentable over the references.

Applicant's petition lacks items (C) and (E) above and thus fails to meet the provisions set forth in M.P.E.P. 708.02, VIII. Therefor the petition is **DISMISSED**.

Should there be any questions with regard to this letter please contact William R. Dixon, Jr. by letter addressed to the Director, Technology Center 1600, P.O. Box 1450, Alexandria, VA 22313-1450, or by telephone at 571-272-0519 or by facsimile transmission at the general Office facsimile number, (571-273-8300.

William R. Dixon, Jr.
Special Program Examiner
Technology Center 1600

UNITED STATES PATENT AND TRADEMARK OFFICE

Commissioner for Patents
United States Patent and Trademark Office
P.O. Box 1450
Alexandria, VA 22313-1450
www.uspto.gov

COPY MAILED

APR 0 9 2009

OFFICE OF PETITIONS

JONES DAY
222 EAST 41ST ST
NEW YORK NY 10017

In re Patent No. 7,404,489	:	
Issue Date: July 29, 2008	:	
Application No. 10/814,399	:	ON PETITION
Filed: March 31, 2004	:	
Attorney Docket No. 12399-002-999	:	

This is a decision on the petition under 37 CFR 1.137(b), filed February 17, 2009, to revive the above-identified application.

The petition is **DISMISSED** as moot.

In reply to the Notice of Allowance and Issue Fee(s) Due mailed May 8, 2008, the issue fee was duly paid on June 19, 2008.

On July 29, 2008, U.S. Patent No. 7,404,489 issued on the instant application.

The instant petition was filed February 17, 2009.

Petitioner states that the above-identified application may have become abandoned pursuant to 35 U.S.C. 12 2(b)(2)(B)(iii) for failure to timely notify the Office of the filing of an application in a foreign country or under a multinational international treaty that requires publication of applications eighteen months after filing. Accordingly, petitioner requests that, if the USPTO deems it necessary, the patentee's failure to timely file a Rescission of Previous Nonpublication Request (35 U.S.C. 122(b)(2)(B)(ii)) and, if applicable, Notice of Foreign Filing (35 U.S.C. 122(b)(2)(B)(iii)) be corrected and the Petition for Revival of an Application for Patent Abandoned for Failure to Notify the Office of a Foreign or International Filing (37 CFR 1.137(f)) be retroactively accepted should the USPTO deem it necessary. Petitioner states that PCT/US2006/024685 is not a counterpart application to the above-noted application.

As set forth in MPEP 1305:

> Once the patent has been granted, the U.S. Patent and Trademark Office can take no action concerning it, except as provided in 35 U.S.C. 135, 35 U.S.C. 251 through 256, 35 U.S.C. 302 through 307 and 35 U.S.C. 311 through 316.

Accordingly, once the patent is granted, the Office has no jurisdiction over the patent. Also, see *Aristocrat Technologies Australia v. International Game Technologies* 2008 U.S. App. LEXIS 20060 (Fed. Cir. 2008) "[p]rocedural lapses during examination, should they occur, do not provide grounds of invalidity. Absent proof of inequitable conduct, the examiner's or the applicant's absolute compliance with the internal rules of patent examination becomes irrelevant after the patent has issued." The case was decided September 22, 2008.

The petition fee of $810, submitted on February 17, 2009, is being credited to petitioner's deposit account as authorized.

Further correspondence with respect to this matter should be addressed as follows:

By Mail: Mail Stop PETITION
Commissioner for Patents
Post Office Box 1450
Alexandria, VA 22313-1450

By hand: U. S. Patent and Trademark Office
Customer Service Window, Mail Stop Petitions
Randolph Building
401 Dulany Street
Alexandria, VA 22314

The centralized facsimile number is **(571) 273-8300.**

Telephone inquiries should be directed to Alicia Kelley at 571-272-6059.

David Bucci
Petitions Examiner
Office of Petitions

UNITED STATES PATENT AND TRADEMARK OFFICE

Commissioner for Patents
United States Patent and Trademark Office
P.O. Box 1450
Alexandria, VA 22313-1450
www.uspto.gov

DUANE MORRIS, LLP
IP DEPARTMENT
30 SOUTH 17TH STREET
PHILADELPHIA, PA 19103-4196

COPY MAILED

AUG 0 3 2006

OFFICE OF PETITIONS

In re Application of Hollowbush et al. :
Application No. 10/814,401 :
Filing Date: March 31, 2004 :
Attorney Docket No. D4781-78 :

Decision on Petition

This is a decision on the petition under 37 CFR 1.137(b), filed June 1, 2006, to revive the above-identified application.

The petition is **granted**.

The above-identified application became abandoned for failure to reply in a timely manner to the non-final Office action mailed November 1, 2005, which set a shortened statutory period for reply of three (3) months. An extension of time under the provisions of 37 CFR 1.136(a) was not obtained. Accordingly, the above-identified application became abandoned on February 2, 2005.

The instant petition requests revival of the application.

Petitioner has met the requirements to revive the above-identified application pursuant to 37 CFR 1.137(b). Therefore, the petition is granted and the application is revived.

Technology Center Art Unit 2628 will be informed of the instant decision and the papers filed June 1, 2006, with the petition will be entered and considered by the examiner in due course.

Telephone inquiries regarding this communication should be directed to Petitions Attorney Steven Brantley at (571) 272-3203.

Charles Steven Brantley
Senior Petitions Attorney
Office of Petitions

UNITED STATES PATENT AND TRADEMARK OFFICE

Commissioner for Patents
United States Patent and Trademark Office
P.O. Box 1450
Alexandria, VA 22313-1450
www.uspto.gov

John C. Alemanni
Patent Department – 53051
KILPACTRICK STOCKTON LLP
1001 West Fourth Street
Winston-Salem, NC 27101

MAILED

JUN 2 5 2005

Technology Center 2100

In re Application of:	)	
Omar Khan et al.	)	
Application No. 10/814,418	)	
Filed: March 31, 2004	)	**DECISION ON REQUEST FOR**
For: METHODS AND SYSTEMS FOR	)	**WITHDRAWAL AS ATTORNEY**
CAPTURING INFORMATION	)	
	)	

This is a decision on the Request For Withdrawal As Attorney Under 37 CFR § 1. 36 and 10.40(c) filed March 10, 2005.

A Revocation And Substitution Of Power Of Attorney Under 37 CFR § 1. 36 was filed on April 04, 2005. The Power Of Attorney revoked all prior Powers Of Attorney and appointed the practitioners of customer number 00758 as the attorneys of record of the instant application. The Power Of Attorney filed April 04, 2005 was accepted. Accordingly, all communications from the U.S. Patent and Trademark Office to applicant are to be conducted by the practitioners of customer number 00758.

For the above stated reasons, the request is DISMISSED AS MOOT.

No further communication to you regarding this application will be made.

Michelle R. Eaeser for

Vincent N. Trans
Special Program Examiner
Technology Center 2100
Computer Architecture, Software, and
Information Security
571-272-3613

UNITED STATES PATENT AND TRADEMARK OFFICE

Commissioner for Patents
United States Patent and Trademark Office
P.O. Box 1450
Alexandria, VA 22313-1450
www.uspto.gov

Catherine Gemrich
Steelcase Development Corporation
6100 East Paris Avenue
Caledonia, MI 49501

COPY MAILED

JUL 0 6 2007

OFFICE OF PETITIONS

In re Application of	:	
Kevin Conwell et al.	:	
Application No. 10/814,436	:	DECISION ON PETITION
Filed: March 31, 2004	:	TO WITHDRAW
Attorney Docket No. 481062.412	:	FROM RECORD
	:	

This is a decision on the Request to Withdraw as attorney or agent of record under 37 C.F.R. § 1.36(b), filed March 31, 2004.

The request is **NOT APPROVED** as moot.

A review of the file record indicates that the power of attorney to Catherine Gemrich has been revoked by the assignee of the patent application on December 1, 2006. Accordingly, the request to withdraw under 37 C.F.R. § 1.36(b) is moot.

All future communications from the Office will continue to be directed to the below-listed address until otherwise notified by applicant.

Telephone inquires concerning this decision should be directed to Terri Williams at 571-272-2991.

Terri Williams
Petitions Examiner
Office of Petitions

cc: **Seed Intellectual Property Law Group PLLC**
701 Fifth Avenue, Suite 5400
Seattle, WA 98104-7092

UNITED STATES PATENT AND TRADEMARK OFFICE

Commissioner for Patents
United States Patent and Trademark Office
P.O. Box 1450
Alexandria, VA 22313-1450
www.uspto.gov

SAMUEL C. EVANS
457 ARNOLD STREET, NE
ATLANTA GA 30308

COPY MAILED

OCT 31 2006

OFFICE OF PETITIONS

In re Application of	:	
Evans, Samuel C.	:	
Application No. 10/814,450	:	DECISION ON PETITION
Filed: March 31, 2004	:	TO MAKE SPECIAL UNDER
Attorney Docket No.	:	37 CFR 1.102(c)(1)
	:	

This is a decision on the petition under 37 CFR 1.102(c)(1), filed August 8, 2006, to make the above-identified application special based on applicant's age as set forth in M.P.E.P. § 708.02, Section IV.

The petition is **GRANTED**.

A grantable petition to make an application special under 37 CFR 1.102(c)(1) and MPEP § 708.02, Section IV: Applicant's Age, must be accompanied by evidence showing that at least one of the applicants is 65 years of age, or more, such as a birth certificate or a statement by applicant. No fee is required.

The instant petition includes copy of applicant passport. Accordingly, the above-identified application has been accorded "special" status.

Telephone inquiries concerning this decision should be directed to April Wise at 571-272-1642.

All other inquiries concerning either the examination or status of the application should be directed to the Technology Center.

The application is being forwarded to the Technology Center Art Unit 1616 for action on the merits commensurate with this decision.

April M. Wise
Petitions Examiner
Office of Petitions

PTO/SB/66 (03-09)
Approved for use through 03/31/2012. OMB 0651-0016
U.S. Patent and Trademark Office: U.S. DEPARTMENT OF COMMERCE
Under the Paperwork Reduction Act of 1995, no persons are required to respond to a collection of information unless it displays valid OMB control number.

PETITION TO ACCEPT UNINTENTIONALLY DELAYED PAYMENT OF MAINTENANCE FEE IN AN EXPIRED PATENT (37 CFR 1.378(c))

Patent Number	Issue Date (YYYY-MM-DD)	Application Number	Filing Date (YYYY-MM-DD)	Docket Number (if applicable)
7,046,765	2006-05-16	10/814,451	2004-03-31	7291P028

CAUTION: Maintenance fee (and surcharge, if any) payment must correctly identify: (1) the patent number and (2) the application number of the actual U.S. application leading to issuance of that patent to ensure the fee(s) is/are associated with the correct patent. 37 CFR 1.366(c) and (d).

SMALL ENTITY
☐ Patentee claims, or has previously claimed, small entity status. See 37 CFR 1.27.

LOSS OF ENTITLEMENT TO SMALL ENTITY STATUS
☐ Patentee is no longer entitled to small entity status. See 37 CFR 1.27(g)

NOT Small Entity		Small Entity	
Fee	Code	Fee	Code
◉ 3 ½ year	(1551)	○ 3 ½ year	(2551)
○ 7 ½ year	(1552)	○ 7 ½ year	(2552)
○ 11 ½ year	(1553)	○ 11 ½ year	(2553)

SURCHARGE
The surcharge required by 37 CFR 1.20(i)(2) (Fee Code 1558) must be paid as a condition of accepting unintentionally delayed payment of the maintenance fee.

MAINTENANCE FEE (37 CFR 1.20(e)-(g))
The appropriate maintenance fee must be submitted with this petition.

STATEMENT
THE UNDERSIGNED CERTIFIES THAT THE DELAY IN PAYMENT OF THE MAINTENANCE FEE TO THIS PATENT WAS UNINTENTIONAL

PETITIONER(S) REQUEST THAT THE DELAYED PAYMENT OF THE MAINTENANCE FEE BE ACCEPTED AND THE PATENT REINSTATED

THIS PORTION MUST BE COMPLETED BY THE SIGNATORY OR SIGNATORIES

37 CFR 1.378(d) states: "Any petition under this section must be signed by an attorney or agent registered to practice before the Patent and Trademark Office, or by the patentee, the assignee, or other party in interest."

I certify, in accordance with 37 CFR 1.4(d)(4) that I am

◉ An attorney or agent registered to practice before the Patent and Trademark Office

○ A sole patentee

○ A joint patentee; I certify that I am authorized to sign this submission on behalf of all the other patentees.

○ A joint patentee; all of whom are signing this e-petition

○ The assignee of record of the entire interest

Patent Practitioner			
A signature of the applicant or representative is required in accordance with 37 CFR 1.33 and 10.18. Please see 37 CFR 1.4(d) for the form of the signature			
Signature	/Daniel Ovanezian/	Date (YYYY-MM-DD)	2010-07-14
Name	Daniel E. Ovanezian	Registration Number	41236

This collection of information is required by 37 CFR 1.378(c). The information is required to obtain or retain a benefit by the public which is to file (and by the USPTO to process) an application. Confidentiality is governed by 35 U.S.C. 122 and 37 CFR 1.11 and 1.14. This collection is estimated to take 1 hour to complete, including gathering, preparing, and submitting the completed application form to the USPTO. Time will vary depending upon the individual case. Any comments on the amount of time you require to complete this form and/ or suggestions for reducing this burden, should be sent to the Chief Information Officer, U.S. Patent and Trademark Office, U.S. Department of Commerce, P.O. Box 1450, Alexandria, VA 22313-1450. DO NOT SEND FEES OR COMPLETED FORMS TO THIS ADDRESS. **This form can only be used when in conjunction with EFS-Web. If this form is mailed to the USPTO, it may cause delays in reinstating the patent.**

Privacy Act Statement

The Privacy Act of 1974 (P.L. 93-579) requires that you be given certain information in connection with your submission of the attached form related to a patent application or patent. Accordingly, pursuant to the requirements of the Act, please be advised that: (1) the general authority for the collection of this information is 35 U.S.C. 2(b)(2); (2) furnishing of the information solicited is voluntary; and (3) the principal purpose for which the information is used by the U.S. Patent and Trademark Office is to process and/or examine your submission related to a patent application or patent. If you do not furnish the requested information, the U.S. Patent and Trademark Office may not be able to process and/or examine your submission, which may result in termination of proceedings or abandonment of the application or expiration of the patent.

The information provided by you in this form will be subject to the following routine uses:

1. The information on this form will be treated confidentially to the extent allowed under the Freedom of Information Act (5 U.S.C. 552) and the Privacy Act (5 U.S.C. 552a). Records from this system of records may be disclosed to the Department of Justice to determine whether the Freedom of Information Act requires disclosure of these records.

2. A record from this system of records may be disclosed, as a routine use, in the course of presenting evidence to a court, magistrate, or administrative tribunal, including disclosures to opposing counsel in the course of settlement negotiations.

3. A record in this system of records may be disclosed, as a routine use, to a Member of Congress submitting a request involving an individual, to whom the record pertains, when the individual has requested assistance from the Member with respect to the subject matter of the record.

4. A record in this system of records may be disclosed, as a routine use, to a contractor of the Agency having need for the information in order to perform a contract. Recipients of information shall be required to comply with the requirements of the Privacy Act of 1974, as amended, pursuant to 5 U.S.C. 552a(m).

5. A record related to an International Application filed under the Patent Cooperation Treaty in this system of records may be disclosed, as a routine use, to the International Bureau of the World Intellectual Property Organization, pursuant to the Patent Cooperation Treaty.

6. A record in this system of records may be disclosed, as a routine use, to another federal agency for purposes of National Security review (35 U.S.C. 181) and for review pursuant to the Atomic Energy Act (42 U.S.C. 218(c)).

7. A record from this system of records may be disclosed, as a routine use, to the Administrator, General Services, or his/her designee, during an inspection of records conducted by GSA as part of that agency's responsibility to recommend improvements in records management practices and programs, under authority of 44 U.S.C. 2904 and 2906. Such disclosure shall be made in accordance with the GSA regulations governing inspection of records for this purpose, and any other relevant (i.e., GSA or Commerce) directive. Such disclosure shall not be used to make determinations about individuals.

8. A record from this system of records may be disclosed, as a routine use, to the public after either publication of the application pursuant to 35 U.S.C. 122(b) or issuance of a patent pursuant to 35 U.S.C. 151. Further, a record may be disclosed, subject to the limitations of 37 CFR 1.14, as a routine use, to the public if the record was filed in an application which became abandoned or in which the proceedings were terminated and which application is referenced by either a published application, an application open to public inspections or an issued patent.

9. A record from this system of records may be disclosed, as a routine use, to a Federal, State, or local law enforcement agency, if the USPTO becomes aware of a violation or potential violation of law or regulation.

UNITED STATES PATENT AND TRADEMARK OFFICE

Commissioner for Patents
United States Patent and Trademark Office
P.O. Box 1450
Alexandria, VA 22313-1450
www.uspto.gov

In re Patent No. 7046765
Issue Date: May 16,2006
Application No. 10814451
Filed: March 31,2004
Attorney Docket No. 63564-012 (ACCL-120)

:
:DECISION GRANTING PETITION
:UNDER 37 CFR 1.378(c)
:

This is a decision on the electronic petition, filed July 14,2010 ,under 37 CFR 1.378(c) to accept the unintentionally delayed payment of the 3.5 year maintenance fee for the above-identified patent.

The petition is **GRANTED**.

The maintenance fee is accepted, and the above-identified patent reinstated as of July 14,2010 .
This decision also constitutes notice that the fee has been accepted. An electronic copy of the petition and this decision has been created as an entry in the Image File Wrapper. Nevertheless, petitioner should print and retain an independent copy.

Telephone inquiries related to this electronic decision should be directed to the Electronic Business Center at 1-866-217-9197.

UNITED STATES PATENT AND TRADEMARK OFFICE

Commissioner for Patents
United States Patent and Trademark Office
P.O. Box 1450
Alexandria, VA 22313-1450
www.uspto.gov

SHAWN HUNTER
P.O BOX 270110
HOUSTON TX 77277-0110

COPY MAILED

FEB 0 1 2008

OFFICE OF PETITIONS

In re Application of	:	
HAUN, Richard D.	:	
Application No. 10/814,464	:	DECISION ON PETITION
Filed: March 31, 2004	:	TO WITHDRAW
Attorney Docket No. **OPE-1001CP-2**	:	FROM RECORD
	:	

This is a decision on the Request to Withdraw as attorney or agent of record under 37 C.F.R. § 1.36(b), filed June 21, 2007.

The request is **APPROVED.**

A grantable request to withdraw as attorney/agent of record must be signed by every attorney/agent seeking to withdraw or contain a clear indication that one attorney is signing on behalf of another/others. A request to withdraw will not be approved unless at least 30 (thirty) days would remain between the date of approval and the later of the expiration date of a time to file a response or the expiration date of the maximum time period which can be extended under 37 C.F.R. § 1.136(a).

The request was signed by Shawn Hunter on behalf of all attorneys of record. All attorneys/agents associated have been withdrawn. Applicant is reminded that there is no attorney of record at this time.

The correspondence address of record has been changed and the new correspondence address is the address indicated below.

Telephone inquiries concerning this decision should be directed to the undersigned at (571) 272-7253.

Monica A. Graves
Petitions Examiner
Office of Petitions

cc: **GABRIEL BARRIENTES**
OPE INTERNATION, LP
1037 RICHMOND AVENUE, SUITE 1000
HOUSTON, TX 77042

UNITED STATES PATENT AND TRADEMARK OFFICE

COMMISSIONER FOR PATENTS
UNITED STATES PATENT AND TRADEMARK OFFICE
P.O. BOX 1450
ALEXANDRIA, VA 22313-1450
www.uspto.gov

TOWNSEND AND TOWNSEND AND CREW, LLP
TWO EMBARCADERO CENTER
EIGHTH FLOOR
SAN FRANCISCO CA 94111-3834

MAIL

SEP 0 9 2005

DIRECTOR OFFICE
TECHNOLOGY CENTER 2100

In re Application of: SUZUKI et al.
Application No. 10/814,475
Filed: March 30, 2004
For: SYSTEM FOR CONTROLLING CONNECTION OF DISK DEVICES

DECISION ON PETITION TO MAKE SPECIAL (ACCELERATED EXAMINATION) UNDER MPEP §708.02 (VIII)

This is a response to the petition filed 10 August 2005, under 37 CFR §1.102(d) and MPEP §708.02 (VIII): Accelerated Examination, to make the above-identified application special.

The Petition is **GRANTED**.

MPEP §708.02, Section VIII which sets out the prerequisites for a grantable petition for Accelerated Examination under 37 C.F.R. §1.102(d) states in relevant part:

A new application (one which has not received any examination by the examiner) may be granted special status provided that applicant (and this term includes applicant's attorney or agent) complies with each of the following items:

(a) Submits a petition to make special accompanied by the fee set forth in **37 CFR 1.17(h)**;

(b) Presents all claims directed to a single invention, or if the Office determines that all the claims presented are not obviously directed to a single invention, will make an election without traverse as a prerequisite to the grant of special status;

(c) Submits a statement(s) that a pre-examination search was made, listing the field of search by class and subclass, publication, Chemical Abstracts, foreign patents, etc. The pre-examination search must be directed to the invention as claimed in the application for which special status is requested. A search made by a foreign patent office satisfies this requirement;

(d) Submits one copy each of the references deemed most closely related to the subject matter encompassed by the claims if said references are not already of record; and

(e) Submits a detailed discussion of the references, which discussion points out, with the particularity required by 37 CFR 1.111 (b) and (c), how the claimed subject matter is patentable over the references.

Applicant's submission meets all the criteria set out above. Accordingly, the petition is **GRANTED**.

The application file is being forwarded to the Examiner of Record for accelerated examination according to the procedures set forth in MPEP § 708.02, Section VIII.

Pinchus M. Laufer
Special Program Examiner
Technology Center 2100
Computer Architecture, Software and Information Security
571-272-3599

ds

UNITED STATES PATENT AND TRADEMARK OFFICE

UNITED STATES DEPARTMENT OF COMMERCE
United States Patent and Trademark Office
Address: COMMISSIONER FOR PATENTS
P.O. Box 1450
Alexandria, Virginia 22313-1450
www.uspto.gov

INTEL/BSTZ
BLAKELY SOKOLOFF TAYLOR & ZAFMAN LLP
1279 OAKMEAD PARKWAY
SUNNYVALE, CA 94085-4040

Mail Date: 07/26/2010

Applicant	: Yatin Hoskote	: DECISION ON REQUEST FOR
Patent Number	: 7668165	: RECALCULATION of PATENT
Issue Date	: 02/23/2010	: TERM ADJUSTMENT IN VIEW
Application No	: 10/814,496	: OF WYETH AND NOTICE OF INTENT TO
Filed	: 03/31/2004	: ISSUE CERTIFICATE OF CORRECTION
		:

The Request for Recalculation is **GRANTED** to the extent indicated.

The patent term adjustment has been determined to be **1729** days. The USPTO will *sua sponte* issue a certificate of correction reflecting the amount of PTA days determined by the recalculation.

Prior to the issuance of the certificate of correction, the USPTO will afford patentee an opportunity to be heard and request reconsideration. Accordingly, patentee has **one month or thirty (30) days**, whichever is longer, to file a request for reconsideration of this patent term adjustment calculation. See 35 U.S.C. 154(b)(3)(B)(ii) and 37 CFR 1.322(a)(4). No extensions of time will be granted under 37 CFR 1.136.

Patentee should use document code PET.OP if electronically filing a request for reconsideration of this patent term adjustment calculation. The patentee must also include the information required by 37 CFR 1.705(b)(2) and the fee required by 37 CFR 1.18(e). If patentee does not file a timely request for reconsideration of this patent term adjustment calculation including the information required by 37 CFR 1.705(b)(2) and the fee required by 37 CFR 1.18(e), the USPTO will issue a certificate of correction reflecting the PTA determination noted above.

Patentee should be aware that in order to preserve the right to review in the United States District Court for the District of Columbia of the USPTO patent term adjustment determination, patentee must ensure that he or she also take the steps required under 35 U.S.C. 154(b)(4)(A) in a timely manner. Nothing in the request for recalculation should be construed as providing an alternative time frame for commencing a civil action under 35 U.S.C. 154(b)(4)(A).

Any questions concerning this decision should be directed to the Office of Patent Legal Administration at 571-272-7702.

UNITED STATES PATENT AND TRADEMARK OFFICE

Commissioner for Patents
United States Patent and Trademark Office
P.O. Box 1450
Alexandria, VA 22313-1450
www.uspto.gov

FEB 22 2007

KNOBBE MARTENS OLSON & BEAR LLP
2040 MAIN STREET
FOURTEENTH FLOOR
IRVINE, CA 92614

In re Application of:
Martin E. Fermann, et al.
Application No. 10/814,502
Filed: March 31, 2004
For: PULSED LASER SOURCES

DECISION ON PETITION
UNDER 37 CFR § 1.48(b)

This is a decision on the petition, filed on 06 March 2006, under 37 C.F.R. § 1.48(b).

The petition is **GRANTED**.

The application is being forward to Technology Center Support Staff to delete inventor Ingmar Hartl and Gennady Imeshev in the PALM database and to mail a corrected filing receipt.

Minsun Harvey
SPE
Technology Center 2828
571-272-1835

UNITED STATES PATENT AND TRADEMARK OFFICE

Commissioner for Patents
United States Patent and Trademark Office
P.O. Box 1450
Alexandria, VA 22313-1450
www.uspto.gov

Roger L. Belfay
829 Tuscarora Avenue
Saint Paul MN 55102

COPY MAILED

DEC 0 5 2008

OFFICE OF PETITIONS

ON PETITION

In re Application of :
Tracy :
Application No. 10/814,504 :
Filed: March 31, 2004 :
Attorney Docket No. 20031124-001 :
For: FOOT FRAME

This is a decision on the petition under 37 CFR 1.137(b), filed October 14, 2008, to revive the above-identified application.

This application became abandoned for failure to timely respond to the final Office action mailed January 26, 2007, which set an extendable three month period for reply. Accordingly, this application became abandoned on April 27, 2007. A Notice of Abandonment was mailed on October 4, 2007.

Applicant has submitted an RCE and required fee and amendment in reply to the January 26, 2007 final Office action, an acceptable statement of the unintentional nature of the delay in responding to the January 26, 2007 final Office action, and the petition fee.

The petition is **GRANTED**.

After the mailing of this decision the application will be forwarded to Technology Center AU 3724 for consideration of the RCE and amendment filed on October 14, 2008.

Telephone inquiries pertaining to this decision may be directed to the undersigned at (571) 272-3230.

Shirene Willis Brantley
Senior Petitions Attorney
Office of Petitions

UNITED STATES PATENT AND TRADEMARK OFFICE

Commissioner for Patents
United States Patent and Trademark Office
P.O. Box 1450
Alexandria, VA 22313-1450
www.uspto.gov

JOHN LAGOWSKI
10521 W. ST. FRANCIS AVE.
GREENFIELD, WI 53228

COPY MAILED

FEB 2 1 2007

OFFICE OF PETITIONS

In re Application of	:	
Dimce Vasilev	:	
Application No. 10/814,519	:	DECISION ON PETITION
Filed: March 31, 2004	:	TO WITHDRAW
Attorney Docket No.	:	FROM RECORD
	:	

This is a decision on the Request to Withdraw as attorney or agent of record under 37 C.F.R. § 1.36(b) filed August 1, 2006.

The request is **APPROVED**.

A grantable request to withdraw as attorney/agent of record must be signed by every attorney/agent seeking to withdraw or contain a clear indication that one attorney is signing on behalf of another/others. A request to withdraw will not be approved unless at least 30 (thirty) days would remain between the date of approval and the later of the expiration date of a time to file a response or the expiration date of the maximum time period which can be extended under 37 C.F.R. § 1.136(a).

The request was signed by John Lagowski on behalf of himself.

All attorneys/agents have been withdrawn from this application. Applicant is reminded that there is no attorney of record at this time.

All future correspondence will be directed to the first named inventor Joe Smith at the address indicated below.

There is an outstanding Office action mailed January 31, 2007 that requires a reply from the applicant.

Telephone inquiries concerning this decision should be directed to undersigned at 571-272-1642.

April M. Wise
Petitions Examiner
Office of Petitions

cc: DIMCE VASILEV
415 W. BELDEN
UNIT K
ADDISON, IL 60101

UNITED STATES PATENT AND TRADEMARK OFFICE

UNITED STATES DEPARTMENT OF COMMERCE
United States Patent and Trademark Office
Address: COMMISSIONER FOR PATENTS
P.O. Box 1450
Alexandria, Virginia 22313-1450
www.uspto.gov

APPLICATION NUMBER	FILING OR 371 (c) DATE	FIRST NAMED APPLICANT	ATTY. DOCKET NO./TITLE
10/814,519	03/31/2004	Dimce Vasilev	

CONFIRMATION NO. 6925

OC000000022551729

OC000000022551729

John Lagowski
10521 W. St. Francis Ave.
Greenfield, WI 53228

Date Mailed: 02/20/2007

NOTICE REGARDING CHANGE OF POWER OF ATTORNEY

This is in response to the Power of Attorney filed 08/01/2006.

- The withdrawal as attorney in this application has been accepted. Future correspondence will be mailed to the new address of record. 37 CFR 1.33.

APRIL M WISE
OP (571) 272-1642

FORMER ATTORNEY/AGENT COPY

UNITED STATES PATENT AND TRADEMARK OFFICE

Commissioner for Patents
United States Patent and Trademark Office
P.O. Box 1450
Alexandria, VA 22313-1450
www.uspto.gov

WILSON SONSINI GOODRICH AND ROSATI / ILYPSA, INC.
650 PAGE MILL ROAD
PALO ALTO CA 94304

COPY MAILED

AUG 2 3 2006

OFFICE OF PETITIONS

In re Application of	:	
Robert et al.	:	
Application No. 10/814,527	:	ON PETITION
Filed: March 30, 2004	:	
Attorney Docket No. 29329-714.201	:	

This is a decision on the petition under 37 CFR 1.102(c)(1), filed March 30, 2004, to make the above-identified application special based on applicant's age as set forth in M.P.E.P. § 708.02, Section IV.

The petition is **GRANTED**.

A grantable petition to make an application special under 37 CFR 1.102(c)(1) and MPEP § 708.02, Section IV: Applicant's Age must be accompanied by evidence showing that at least one of the applicants is 65 years of age, or more, such as a birth certificate or a statement by applicant. No fee is required.

The instant petition includes a Statement from the applicant, John Fordtran. Accordingly, the above-identified application has been accorded "special" status.

Telephone inquiries concerning this decision should be directed to the undersigned at 571-272-3206. All other inquiries concerning either the examination or status of the application should be directed to the Technology Center.

This matter is being referred to the Technology Center Art Unit 1614 for action on the merits commensurate with this decision.

Liana Chase
Petitions Examiner
Office of Petitions

UNITED STATES PATENT AND TRADEMARK OFFICE

UNITED STATES DEPARTMENT OF COMMERCE
United States Patent and Trademark Office
Address: COMMISSIONER FOR PATENTS
P.O. Box 1450
Alexandria, Virginia 22313-1450
www.uspto.gov

COATS & BENNETT, PLLC
1400 Crescent Green, Suite 300
Cary, NC 27518

Mail Date: 04/21/2010

Applicant	: Vibhor Julka	: DECISION ON REQUEST FOR
Patent Number	: 7586847	: RECALCULATION of PATENT
Issue Date	: 09/08/2009	: TERM ADJUSTMENT IN VIEW
Appliction No	: 10/814,550	: OF WYETH AND NOTICE OF INTENT TO
Filed	: 03/31/2004	: ISSUE CERTIFICATE OF CORRECTION
		:

The Request for Recalculation is **GRANTED** to the extent indicated.

The patent term adjustment has been determined to be **1560** days. The USPTO will *sua sponte* issue a certificate of correction reflecting the amount of PTA days determined by the recalculation.

Prior to the issuance of the certificate of correction, the USPTO will afford patentee an opportunity to be heard and request reconsideration. Accordingly, patentee has **one month or thirty (30) days**, whichever is longer, to file a request for reconsideration of this patent term adjustment calculation. See 35 U.S.C. 154(b)(3)(B)(ii) and 37 CFR 1.322(a)(4). No extensions of time will be granted under 37 CFR 1.136.

Patentee should use document code PET.OP if electronically filing a request for reconsideration of this patent term adjustment calculation. The patentee must also include the information required by 37 CFR 1.705(b)(2) and the fee required by 37 CFR 1.18(e). If patentee does not file a timely request for reconsideration of this patent term adjustment calculation including the information required by 37 CFR 1.705(b)(2) and the fee required by 37 CFR 1.18(e), the USPTO will issue a certificate of correction reflecting the PTA determination noted above.

Patentee should be aware that in order to preserve the right to review in the United States District Court for the District of Columbia of the USPTO patent term adjustment determination, patentee must ensure that he or she also take the steps required under 35 U.S.C. 154(b)(4)(A) in a timely manner. Nothing in the request for recalculation should be construed as providing an alternative time frame for commencing a civil action under 35 U.S.C. 154(b)(4)(A).

Any questions concerning this decision should be directed to the Office of Patent Legal Administration at 571-272-7702.

UNITED STATES PATENT AND TRADEMARK OFFICE

Commissioner for Patents
United States Patent and Trademark Office
P.O. Box 1450
Alexandria, VA 22313-1450
www.uspto.gov

MARK R. COLGROVE
310 CHERRY STREET
OXFORD, NC 27565

COPY MAILED

JUL 19 2005

OFFICE OF PETITIONS

In re Application of :
Mark R. Colgrove :
Application No. 10/814,562 : ON PETITION
Filed: March 31, 2004 :
For: SUPPORT APPARATUS :

This is a decision on the petition under 37 CFR 1.137(b), filed April 22, 2005, to revive the above-identified application.

The petition is **GRANTED**.

The above-identified application became abandoned for failure to reply in a timely manner to the Notice to File Corrected Application Papers (Notice) mailed June 14, 2004. The Notice set a period for reply of two (2) months from the mail date of the Notice. No extensions of time under the provisions of 37 CFR 1.136(a) were obtained. Accordingly, the above-identified application became abandoned on August 15, 2004.

It is not apparent whether the person signing the statement of unintentional delay was in a position to have firsthand or direct knowledge of the facts and circumstances of the delay at issue. Nevertheless, such statement is being treated as having been made as the result of a reasonable inquiry into the facts and circumstances of such delay. See 37 CFR 10.18(b) and Changes to Patent Practice and Procedure; Final Rule Notice, 62 Fed. Reg. 53131, 53178 (October 10, 1997), 1203 Off. Gaz. Pat. Office 63, 103 (October 21, 1997). In the event that such an inquiry has not been made, petitioner must make such an inquiry. If such inquiry results in the discovery that it is not correct that the entire delay in filing the required reply from the due date for the reply until the filing of a grantable petition pursuant to 37 CFR 1.137(b) was unintentional, petitioner must notify the Office.

Telephone inquiries concerning this decision should be directed to Wan Laymon at (571) 272-3220.

This matter is being referred to the Office of Initial Patent Examination.

Wan Laymon
Petitions Examiner
Office of Petitions
Office of the Deputy Commissioner
for Patent Examination Policy

UNITED STATES PATENT AND TRADEMARK OFFICE

UNITED STATES DEPARTMENT OF COMMERCE
United States Patent and Trademark Office
Address: COMMISSIONER FOR PATENTS
P.O. Box 1450
Alexandria, Virginia 22313-1450
www.uspto.gov

PERKINS COIE LLP
PATENT-SEA
P.O. BOX 1247
SEATTLE, WA 98111-1247

Mail Date: 04/20/2010

Applicant	: Dan Gealy	: DECISION ON REQUEST FOR
Patent Number	: 7584942	: RECALCULATION of PATENT
Issue Date	: 09/08/2009	: TERM ADJUSTMENT IN VIEW
Appliction No	: 10/814,573	: OF WYETH AND NOTICE OF INTENT TO
Filed	: 03/31/2004	: ISSUE CERTIFICATE OF CORRECTION
		:

The Request for Recalculation is **GRANTED** to the extent indicated.

The patent term adjustment has been determined to be **1557** days. The USPTO will *sua sponte* issue a certificate of correction reflecting the amount of PTA days determined by the recalculation.

Prior to the issuance of the certificate of correction, the USPTO will afford patentee an opportunity to be heard and request reconsideration. Accordingly, patentee has **one month or thirty (30) days**, whichever is longer, to file a request for reconsideration of this patent term adjustment calculation. See 35 U.S.C. 154(b)(3)(B)(ii) and 37 CFR 1.322(a)(4). No extensions of time will be granted under 37 CFR 1.136.

Patentee should use document code PET.OP if electronically filing a request for reconsideration of this patent term adjustment calculation. The patentee must also include the information required by 37 CFR 1.705(b)(2) and the fee required by 37 CFR 1.18(e). If patentee does not file a timely request for reconsideration of this patent term adjustment calculation including the information required by 37 CFR 1.705(b)(2) and the fee required by 37 CFR 1.18(e), the USPTO will issue a certificate of correction reflecting the PTA determination noted above.

Patentee should be aware that in order to preserve the right to review in the United States District Court for the District of Columbia of the USPTO patent term adjustment determination, patentee must ensure that he or she also take the steps required under 35 U.S.C. 154(b)(4)(A) in a timely manner. Nothing in the request for recalculation should be construed as providing an alternative time frame for commencing a civil action under 35 U.S.C. 154(b)(4)(A).

Any questions concerning this decision should be directed to the Office of Patent Legal Administration at 571-272-7702.

UNITED STATES PATENT AND TRADEMARK OFFICE

Commissioner for Patents
United States Patent and Trademark Office
P.O. Box 1450
Alexandria, VA 22313-1450
www.uspto.gov
DIW 08-04

HEWLETT-PACKARD COMPANY
INTELLECTUAL PROPERTY ADMINISTRATION
P.O. BOX 272400
FORT COLLINS CO 80527-2400

COPY MAILED

AUG 1 6 2004

OFFICE OF PETITIONS

In re Application of	:	
Drory et al.	:	
Application No. 10/814,579	:	DECISION GRANTING PETITION
Filed: 31 March, 2004	:	
Attorney's Docket No. 200315226-1	:	
NUHP:0240/FLE		

This is a decision on the petition filed on 12 July, 2004, to accord the above-identified application a filing date of 31 March, 2004, with four (4) sheets of drawings as a part of the original disclosure.

On 31 March, 2004, the application was filed. Accordingly, on 14 June, 2004, Initial Patent Examination Division mailed a "Notice of Incomplete Nonprovisional Application" stating that the application had not been accorded a filing date because the application had been deposited without drawings. A two (2)-month period for reply was set.

In response, on 12 July, 2004, the present petition was filed, accompanied by four (4) sheets of drawings. Petitioners argue that four (4) sheets of drawings were present among the application papers filed on 31 March, 2004. In support, petitioners have supplied a copy of an itemized postcard receipt bearing the application number of the present application and an "Office date" of 31 March, 2004, identifying the application by first named inventor's name and attorney docket number and itemizing the filing of "three (3) sets of formal drawings".

A review of the official file reveals that no sheets of drawings are located among the application papers received in the Office on 31 March, 2004. However, the evidence is convincing that the application as filed did contain drawings. The application, therefore, is entitled to a filing date of 31 March, 2004, with

four (4) sheets of formal drawings as a part of the original disclosure.

The Notice mailed on 14 June, 2004, is withdrawn.

Petitioners are advised, in future filings, that the postcard should itemize the number of sheets and figures of drawings filed. If some but not all of the drawing figures are received, a postcard that does not itemize the number of sheets and figures that were filed, the postcard will not serve as prima facie evidence that the omitted figures were among the application papers filed.

The fee of $130.00 paid with the present petition has been refunded to counsel's deposit account, No. 08-2025.

The application will be processed and examined using the four (4) sheets of drawings filed with the present petition.

The application is being returned to the Office of Initial Patent Examination for further processing with a filing date of 31 March, 2004, using the application papers filed on that date and the four (4) sheets of drawings filed with the present petition.

Telephone inquiries specific to this matter should be directed to the undersigned at 703 308-6918.

D Wood

Douglas I. Wood
Senior Petitions Attorney
Office of Petitions

UNITED STATES PATENT & TRADEMARK OFFICE
Washington, D.C. 20231

REQUEST FOR **PATENT** FEE REFUND

1 Date of Request: 8/13/04

2 Serial/Patent # 10814579

	3 Please refund the following fee(s):	4 PAPER NUMBER	5 DATE FILED	6 AMOUNT
	Filing			$
	Amendment			$
	Extension of Time			$
	Notice of Appeal/Appeal			$
1460	Petition		7/12/04	$ 130
	Issue			$
	Cert of Correction/Terminal Disc.			$
	Maintenance			$
	Assignment			$
	Other			$

7 TOTAL AMOUNT OF REFUND $ 130

8 TO BE REFUNDED BY:

- [ ] Treasury Check
- [x] Credit Deposit A/C #:

9 08--2025

10 REASON:

- [ ] Overpayment
- [ ] Duplicate Payment
- [x] No Fee Due (Explanation):

PET DUE TO PTO ERROR

11 REFUND REQUESTED BY:

TYPED/PRINTED NAME: D. WOOD TITLE: SR ATTY

SIGNATURE: DW PHONE: 3086918

OFFICE: OP

****

THIS SPACE RESERVED FOR FINANCE USE ONLY:

APPROVED: [signature] DATE: 8/16/04

Adjustment Date: 08/16/2004 AKELLEY 10814579
07/14/2004 AWONDAFE 00000012 082025
01 FC:1460 130.00 CR

Instructions for completion of this form appear on the back. After completion, attach white and yellow copies to the official file and mail or hand-carry to:

Office of Finance
Refund Branch
Crystal Park One, Room 802B

FORM PTO 1577
(01/90)

UNITED STATES PATENT AND TRADEMARK OFFICE

Commissioner for Patents
United States Patent and Trademark Office
P.O. Box 1450
Alexandria, VA 22313-1450
www.uspto.gov

COPY MAILED

JUL 25 2007

OFFICE OF PETITIONS

MCDERMOTT WILL & EMERY LLP
600 13TH STREET, N.W.
WASHINGTON DC 20005-3096

In re Application of
Kay
Application No. 10/814,584
Filed: April 1, 2004
Attorney Docket No. 44117-137

: DECISION
: DISMISSING PETITION

This application has been referred to this office in light of the communication filed June 4, 2007, by inventor Kay, styled as a petition under 37 CFR 1.182 to withdraw this application from issue.

The petition is dismissed without further consideration.

The petition seeks withdrawal of this application from issue on the ground that the terminal disclaimer filed January 9, 2007, is defective in that as this application and Continuation-in-Part (CIP) application no. 11/094,510('510) are not commonly owned, 37 CFR 1.321 has not been satisfied.

The CIP application was accorded Rule 47 status on February 9, 2006, in the absence of the making of this application by there joint inventor Kay. While Mr. Kay has herein participated in the filing and appointed a power of attorney, the assignee of the entire interest filed a 3.73(b) statement on March 27, 2007 which is reasonably construed as indicating that the assignee herein intervened on that date to the exclusion of the named inventor. Since there is and remains a duly appointed practitioner, and further the assignee of the entire interest has intervened, there is no compelling reason to further consider the subsequent petition signed by the named inventor. See 37 CFR 1.33(b)(4).

Nevertheless, while the terminal disclaimer filed herein correctly asserts that Quantum Leap Research Inc., (Quantum) is the owner of 100% interest in this application, the instant disclaimer is facially lacking in that the 2 applications are NOT commonly owned. Since the '510 application is asserted to be a CIP of this application the assignment of this application by Kay does not carry, and thus has no force and effect with respect, to the CIP application. See MPEP 306. In the absence of an assignment of Kay's interest in the CIP application to Quantum, Kay retains his 50% *pro rata* share in the CIP application. See 37 CFR 3.73(a). While Quantum is the 100% assignee of this application, Quantum is the assignee of only 50% of the CIP and Kay owns the other 50%. Accordingly, the 2 applications are not commonly owned.

This application is being referenced to the Technology Center for further action consistent with this communication.

Telephone inquiries related to this decision should be directed to the undersigned at (571) 272-3217.

Brian Hearn
Petitions Examiner

UNITED STATES PATENT AND TRADEMARK OFFICE

UNITED STATES DEPARTMENT OF COMMERCE
United States Patent and Trademark Office
Address: COMMISSIONER FOR PATENTS
P.O. Box 1450
Alexandria, Virginia 22313-1450
www.uspto.gov

APPLICATION NO.	FILING DATE	FIRST NAMED INVENTOR	ATTORNEY DOCKET NO.	CONFIRMATION NO.
10/814,585	04/01/2004	Gregory Plos	05725.1321-00	5860

22852 7590 06/05/2007
FINNEGAN, HENDERSON, FARABOW, GARRETT & DUNNER LLP
901 NEW YORK AVENUE, NW
WASHINGTON, DC 20001-4413

EXAMINER
ELHILO, EISA B

ART UNIT	PAPER NUMBER
1751	

MAIL DATE	DELIVERY MODE
06/05/2007	PAPER

Please find below and/or attached an Office communication concerning this application or proceeding.

The time period for reply, if any, is set in the attached communication.

SPE RESPONSE FOR CERTIFICATE OF CORRECTION

Paper No.: ____

DATE : 5/22/07

TO SPE OF : ART UNIT 175

SUBJECT : Request for Certificate of Correction for Appl. No.: 10/814585 Patent No: 7192454 B2

A response is requested with respect to a request for a certificate of correction.

With respect to the change(s) requested to correct Office and/or Applicant's errors, should the patent read as shown in the certificate of correction attached herewith or the COCIN document(s), in IFW images for the above-identified patented application? No new matter should be introduced, nor should the scope or meaning of the claims be changed.

If the response is for an IFW, within 7 days, please complete and forward the response, to the employee (named below) via scanning into application images, using document code **COCX**.

If the response is for a paper file wrapper, please complete the response and forward the response with the paper file wrapper, to the employee (named below), within 7 days, to:

Certificates of Correction Branch (CofC)
South Tower - 9A22
Palm Location 7580

VIRGINIA TOLBERT
Certificates of Correction Branch
703-308-9390 ext. 113

Thank You For Your Assistance

The request for issuing the above-identified correction(s) is hereby:
Note your decision on the appropriate box.

- ☑ **Approved** — All changes apply.
- ☐ **Approved in Part** — Specify below which changes **do not** apply.
- ☐ **Denied** — State the reasons for denial below.

Comments:

All Change apply.
Thank you.
Examiner Chlo, 5/31/07

Douglas M Gintz — SPE
1751 — Art Unit

UNITED STATES PATENT AND TRADEMARK OFFICE

Commissioner for Patents
United States Patent and Trademark Office
P.O. Box 1450
Alexandria, VA 22313-1450
www.uspto.gov

TOWSEND AND TOWSEND AND CREW LLP
Two Embarcadero Center
Eight Floor
San Francisco, CA. 94111-3834

COPY MAILED

SEP 02 2009

OFFICE OF PETITIONS

In re Application of :
Bernard ANDREAS ET AL :
Application No. 10/814,593 : RESPONSE TO PETITION
Filed: March 30, 2004 :
Attorney Docket No. 021629-002500US :

This is a response to the petition under 37 CFR 1.59(b), filed February 10, 2009, to expunge information from the above identified application.

The petition is dismissed.

The petition does not clearly identify the information requested to be expunged. A review of the file indicates that several papers were filed on February 10, 2009. The request is not directed to a specific document.

The petition does not contain a clear statement that the information requested to be expunged was unintentionally submitted and failure to obtain its return would cause irreparable harm to the party who submitted the information or to the party in interest on whose behalf the information was submitted. A review of the papers submitted February 10, 2009, indicate that the papers are in response to the office action dated January 13, 2009.

The petition does not contain a commitment on the part of petitioner to retain the information to be expunged for the period of any patent with regard to which such information is submitted.

However, the petition is premature since prosecution of the application has not been closed by way of the allowance of the application, the mailing of an Ex parte Quayle action, or the abandonment of the application. See MPEP 724.06. Accordingly, it is not appropriate to make a final determination of whether or not the material requested to be expunged is "material," with "materiality" being defined as any information which the examiner considers as being important to a determination of patentability of the claims. Thus, the decision on the petition to expunge must be dismissed at this time.

During prosecution on the merits, the examiner will determine whether or not the identified document is considered to be "material." If the information is not considered by the examiner to be material and the conditions related to the expungement of unintentionally submitted

information, discussed as A-F in MPEP 724.05 II, are satisfied, the information will be removed from the official file.

After the mailing of a Notice of Allowance, an Ex parte Quayle action or a Notice of Abandonment, the petition to expunge may be renewed by applicant(s) or applicant(s)' representative. No further fee is required for such a second submission of a petition under 37 CFR 1.59 to expunge information. **In addition, the requester is cautioned to renew the petition under 37 CFR 1.59 for reconsideration by the Office prior to the point at which the present file, or file claiming priority to the present file, is forwarded for issuance of the patent. This is to be done no later than immediately after the examiner has issued a Notice of Allowance, an Ex parte Quayle action or a Notice of Abandonment. A failure to timely renew the petition to expunge prior to the point at which the file is forwarded for issuance will result in the material being retained in the patented file and thus becoming open to the public.**

Telephone inquiries concerning this communication should be directed to the undersigned at 571-272-0602.

Thurman K. Page

Thurman K. Page
Petitions Examiner
Office of Petitions

UNITED STATES PATENT AND TRADEMARK OFFICE

UNITED STATES DEPARTMENT OF COMMERCE
United States Patent and Trademark Office
Address: COMMISSIONER FOR PATENTS
P.O. Box 1450
Alexandria, Virginia 22313-1450
www.uspto.gov

MORRISON & FOERSTER LLP
755 PAGE MILL RD
PALO ALTO, CA 94304-1018

Mail Date: 04/26/2010

Applicant	: Tania Kastelic	: DECISION ON REQUEST FOR
Patent Number	: 7598079	: RECALCULATION of PATENT
Issue Date	: 10/06/2009	: TERM ADJUSTMENT IN VIEW
Application No	: 10/814,634	: OF WYETH AND NOTICE OF INTENT TO
Filed	: 04/01/2004	: ISSUE CERTIFICATE OF CORRECTION
		:

The Request for Recalculation is **GRANTED** to the extent indicated.

The patent term adjustment has been determined to be **594** days. The USPTO will *sua sponte* issue a certificate of correction reflecting the amount of PTA days determined by the recalculation.

Prior to the issuance of the certificate of correction, the USPTO will afford patentee an opportunity to be heard and request reconsideration. Accordingly, patentee has **one month or thirty (30) days**, whichever is longer, to file a request for reconsideration of this patent term adjustment calculation. See 35 U.S.C. 154(b)(3)(B)(ii) and 37 CFR 1.322(a)(4). No extensions of time will be granted under 37 CFR 1.136.

Patentee should use document code PET.OP if electronically filing a request for reconsideration of this patent term adjustment calculation. The patentee must also include the information required by 37 CFR 1.705(b)(2) and the fee required by 37 CFR 1.18(e). If patentee does not file a timely request for reconsideration of this patent term adjustment calculation including the information required by 37 CFR 1.705(b)(2) and the fee required by 37 CFR 1.18(e), the USPTO will issue a certificate of correction reflecting the PTA determination noted above.

Patentee should be aware that in order to preserve the right to review in the United States District Court for the District of Columbia of the USPTO patent term adjustment determination, patentee must ensure that he or she also take the steps required under 35 U.S.C. 154(b)(4)(A) in a timely manner. Nothing in the request for recalculation should be construed as providing an alternative time frame for commencing a civil action under 35 U.S.C. 154(b)(4)(A).

Any questions concerning this decision should be directed to the Office of Patent Legal Administration at 571-272-7702.

UNITED STATES PATENT AND TRADEMARK OFFICE

Commissioner for Patents
United States Patent and Trademark Office
P.O. Box 1450
Alexandria, VA 22313-1450
www.uspto.gov

MORRISON & FOERSTER LLP
1650 TYSONS BOULEVARD, SUITE 400
MCLEAN VA 22102

COPY MAILED

AUG 27 2007

OFFICE OF PETITIONS

In re Application of :
KOO, et al. :
Application No. 10/814,695 :
Filed: March 30, 2004 :
Attorney Docket No. INTEL1510(P18520) :

DECISION ON PETITION
TO WITHDRAW
FROM RECORD

This is a decision on the Request to Withdraw as attorney or agent of record under 37 C.F.R. § 1.36(b), filed April 2, 2007.

The request is **APPROVED.**

A grantable request to withdraw as attorney/agent of record must be signed by every attorney/agent seeking to withdraw or contain a clear indication that one attorney is signing on behalf of another/others. A request to withdraw will not be approved unless at least 30 (thirty) days would remain between the date of approval and the later of the expiration date of a time to file a response or the expiration date of the maximum time period which can be extended under 37 C.F.R. § 1.136(a).

The request was signed by Peter J. Davis on behalf of all attorneys of record. All attorneys/agents associated have been withdrawn. Applicant is reminded that there is no attorney of record at this time.

The request to change the correspondence of record is not acceptable as the requested correspondence address is not that of: (1) the first named signing inventor; or (2) an intervening assignee of the entire interest under 37 C.F.R 3.71. All future communications from the Office will be directed to the first named signing inventor at the first copied address below until otherwise properly notified by the applicant.

Telephone inquiries concerning this decision should be directed to the undersigned at (571) 272-7253.

Monica A. Graves
Petitions Examiner
Office of Petitions

cc: TAE-WOONG KOO
849 W. ORANGE AVENUE, APT 3015
SOUTH SAN FRANCISCO, CA 94080

cc: DARBY & DARBY PC
1500 K STREET NW, SUITE 250
WASHINGTON, DC 20005-1714

UNITED STATES PATENT AND TRADEMARK OFFICE

COMMISSIONER FOR PATENTS
UNITED STATES PATENT AND TRADEMARK OFFICE
P.O. BOX 1450
ALEXANDRIA, VA 22313-1450
www.uspto.gov

BOZICEVIC, FIELD & FRANCIS, LLP
1900 UNIVERSITY AVENUE
SUITE 200
EAST PALO ALTO, CA 94303

COPY MAILED

AUG 0 4 2006

OFFICE OF PETITIONS

In re Application of	:	
Lawrence M. Blatt	:	DECISION ON REQUEST
Application No. 10/814,701	:	TO WITHDRAW FROM
Filed: March 30, 2004	:	RECORD
Attorney Docket No. INTM-030	:	

This is a decision on the Request to Withdraw as attorney or agent under 37 C.F.R. § 1.36(b) or 37 CFR § 10.40 filed on August 12, 2005.

The request is **APPROVED**.

A grantable request to withdraw as attorney/agent of record must be signed by every attorney/agent seeking to withdraw or contain a clear indication that one attorney is signing on behalf of another/others. A request to withdraw will not be approved unless at least 30 (thirty) days would remain between the date of approval and the later of the expiration date of a time to file a response or the expiration date of the maximum time period which can be extended under 37 CFR § 1.136(a).

The request was signed by Paula Borden, on behalf of all the attorneys/agents associated with Customer Number 24353.

Paula Borden and all the attorneys/agents associated with Customer Number 24353 have been withdrawn. Therefore, applicant is reminded that there are no attorneys/agents of record at this time.

While the assignee attempted to intervene in the above-identified application, the Revocation of Power of Attorney filed September 7, 2005 does not comply with 37 CFR 3.73(b), in that the required Statement under 37 CFR 3.73(b) has not been provided. Therefore, in order for the Revocation of Power of Attorney to be acceptable, compliance with 37 CFR 3.73(b) must be satisfied. A form for complying with the provisions of 37 CFR 3.73(b) may be found on the USPTO.gov website (Form No. PTO/SB/96).

The request to change the correspondence of record is not acceptable as the requested correspondence address is not that of: (1) the first named signing inventor; or (2) the intervening assignee of the entire interest. All future communications from the Office will be directed to the sole inventor at the first copied address below until otherwise properly notified by the applicant.

Telephone inquiries concerning this decision should be directed to Andrea Smith at (571) 272-3226.

Andrea Smith
Petitions Examiner
Office of Petitions

cc: Lawrence M. Blatt
10 Shoreview
San Francisco, CA 94121

Howrey, LLP
c/o Ip Docketing Department
2941 Fairview Park Drive, Suite 200
Falls Church, VA 22042-2924

UNITED STATES PATENT AND TRADEMARK OFFICE

Commissioner for Patents
United States Patent and Trademark Office
P.O. Box 1450
Alexandria, VA 22313-1450
www.uspto.gov

HOWREY, LLP
C/O IP DOCKETING DEPARTMENT
2941 FAIRVIEW PARK DRIVE, SUITE 200
FALLS CHURCH, VA 22042-2924

COPY MAILED

AUG 0 4 2006

OFFICE OF PETITIONS

In re Application of	:	
Lawrence M. Blatt	:	
Application No. 10/814,701	:	DECISION ON REQUEST FOR
Filed: March 30, 2004	:	REVOCATION OF POWER
Attorney Docket No. INTM-030	:	OF ATTORNEY
	:	

This is a decision on the Request to Revoke the attorney or agent of record under 37 CFR § 1.36(a), filed September 7, 2005.

The request is **NOT APPROVED**.

A power of attorney, pursuant to § 1.32(b), may be revoked at any stage in the proceeding of a case by an applicant for patent (§ 1.41(b)) or an assignee of the entire interest of the applicant under § 3.71(b). Fewer than all of the applicants (or by fewer than the assignee of the entire interest of the applicant) may only revoke the power of attorney upon a showing of sufficient cause, and payment of the petition fee set forth § 1.17(h). For the assignee to take action a proper statement under § 3.73(b) is required.

The request cannot be approved because no statement under 3.73(b) was filed.

Telephone inquiries concerning this decision should be directed to Andrea Smith at 571-272-3226.

Andrea Smith
Petitions Examiner
Office of Petitions

UNITED STATES PATENT AND TRADEMARK OFFICE

Commissioner for Patents
United States Patent and Trademark Office
P.O. Box 1450
Alexandria, VA 22313-1450
www.uspto.gov

COPY MAILED

APR 15 2008

OFFICE OF PETITIONS

THELEN REID BROWN RAYSMAN & STEINER LLP
PO BOX 640640
SAN JOSE, CA 95164-0640

In re Application of	:	
Lawrence M. Blatt	:	
Application No. 10/814,701	:	DECISION ON PETITION
Filed: March 30, 2004	:	TO WITHDRAW
Attorney Docket No. 6319-4502US	:	FROM RECORD
	:	

This is a decision on the Request to Withdraw as attorney or agent under 37 C.F.R. § 1.36(b) filed October 26, 2007.

The request is **NOT APPROVED**.

A review of the file record indicates that James P. Demers of Thelen, Reid, brown, Raysman & Steiner, LLP does not have power of attorney in this patent application. See 37 C.F.R. § 10.40. Accordingly, the request to withdraw under 37 C.F.R. § 1.36(b) is not applicable.

All future communications from the Office will continue to be directed to the below-listed address until otherwise properly notified by the applicant.

Telephone inquires concerning this decision should be directed to undersigned at 571-272-1642.

April M. Wise
Petitions Examiner
Office of Petitions

cc: MCDERMOTT, WILL & EMERY
4370 LA JOLLA FILLAGE DRIVE
SUITE 700
SAN DIEGO, CA 92122

UNITED STATES PATENT AND TRADEMARK OFFICE

Commissioner for Patents
United States Patent and Trademark Office
P.O. Box 1450
Alexandria, VA 22313-1450
www.uspto.gov

MAIL

JUL 1 1 2005

DIRECTOR OFFICE
TECHNOLOGY CENTER 2100

TOWNSEND AND TOWNSEND AND CREW, LLP
TWO EMBARCADERO CENTER
EIGHTH FLOOR
SAN FRANCISCO CA 94111-3834

In re Application of: MANABU KITAMURA

Application No. 10/814,706
Filed: March 30, 2004
For: ASURING GENUINENESS OF DATA STORED ON A STORAGE DEVICE PERFUSION

DECISION ON PETITION TO MAKE SPECIAL (ACCELERATED EXAMINATION) UNDER M.P.E.P. §708.02 (VIII)

This is a response to the petition filed April 29, 2005, under 37 C.F.R. §1.102(d) and M.P.E.P. §708.02 (VIII): Accelerated Examination, to make the above-identified application special.

The Petition is **DISMISSED**.

M.P.E.P. §708.02, Section VIII which sets out the prerequisites for a grantable petition for Accelerated Examination under 37 C.F.R. §1.102(d) states in relevant part:

A new application (one which has not received any examination by the examiner) may be granted special status provided that applicant (and this term includes applicant's attorney or agent) complies with each of the following items:

(a) Submits a petition to make special accompanied by the fee set forth in **37 CFR 1.17(h)**;

(b) Presents all claims directed to a single invention, or if the Office determines that all the claims presented are not obviously directed to a single invention, will make an election without traverse as a prerequisite to the grant of special status;

(c) Submits a statement(s) that a pre-examination search was made, listing the field of search by class and subclass, publication, Chemical Abstracts, foreign patents, etc. The pre-examination search must be directed to the invention as claimed in the application for which special status is requested. A search made by a foreign patent office satisfies this requirement;

(d) Submits one copy each of the references deemed most closely related to the subject matter encompassed by the claims if said references are not already of record; and

(e) Submits a detailed discussion of the references, which discussion points out, with the particularity required by 37 CFR 1.111 (b) and (c), how the claimed subject matter is patentable over the references.

The petition filed April 28, 2005 fails to adequately meet requirement (e) of the criteria set forth above. With respect to requirement (e), applicant must provide a detailed discussion of reference documents (U.S. Patent 5,930,358 granted to Rao and U. S. Patent Application No. 10/808,792 filed March, 24, 2004) since applicant has deemed it as one of the most closely related references. As to U.S. Patent 5,930,358, merely paraphrasing two or more columns of reference (as in discussion on page 3 of 10, paragraphs 4-5, which phrases abstract and col. 1, line 48, through column 3, line 20, includes the summary of the invention) accompanied by a copy of claim 1 repeated limitation(s) not taught by the reference; (such as "a storage controller that collects log information of the management operation on at least one of the storage volumes"; see, paragraphs 4, lines 2-3 and 6-7). As to US Patent Application Serial Number 10/808,792, such listing is an improper submission included with the petition, a pending application is not published document and/or granted patent, it cannot be cited on form PTO 1449. However, the Petitioner is suggested to include teachings of this document in the specification in the section, "Description of the Related Art" including information disclosed under 37 CFR 1.97 and 37 CFR 1.98: A description of the related art known to the applicant and including, if applicable, references to specific related art and problems involved in the prior art which are solved by the applicant's invention. This item may also be titled "Background Art.". Petitioner is suggested to review all references cited in the Petition and PTO 1449 and the Petitioner should ensure that the above discussion is directed to how the language of **each of the independent claims** are specifically distinguishable and patentable from the references provided in requirement (d) above. The statement that the reference shares the same deficiencies as another reference is not sufficient to meet the requirement of a detailed discussion as required by 37 CFR 1.111 (b) and (c).

In addition, Petitioner should considering removing US Patent Application Serial Number 10/808,792 from inclusion in the Petition and from PTO-1449 to ensure consideration of all of the cited references.

Petition to Make Special **DISMISSED**.

Petitioner is given one opportunity to perfect the petition. Any request for reconsideration must be filed within TWO MONTHS of the mail date of this decision.

Until the renewed petition is submitted, the application will be returned to the examiner's docket to await treatment on the merits in the normal order of examination.

Brian L. Johnson
Special Program Examiner
Technology Center 2100
Computer Architecture, Software and Information Security
571-272-3595

7/6/05

RP

UNITED STATES PATENT AND TRADEMARK OFFICE

COMMISSIONER FOR PATENTS
UNITED STATES PATENT AND TRADEMARK OFFICE
P.O. BOX 1450
ALEXANDRIA, VA 22313-1450
www.uspto.gov

MAIL

SEP 0 9 2005

DIRECTOR OFFICE
TECHNOLOGY CENTER 2100

TOWNSEND AND TOWNSEND AND CREW, LLP
TWO EMBARCADERO CENTER
EIGHTH FLOOR
SAN FRANCISCO CA 94111-3834

In re Application of: KITAMURA
Application No. 10/814,706
Filed: March 30, 2004
For: ASSURING GENUINESS OF DATA STORED ON A STORAGE DEVICE

DECISION ON PETITION
TO MAKE SPECIAL
(ACCELERATED EXAMINATION)
UNDER M.P.E.P. §708.02 (VIII)

This is a response to the renewed petition filed 10 August 2005, under 37 C.F.R. §1.102(d) and M.P.E.P. §708.02 (VIII): Accelerated Examination, to make the above-identified application special.

The renewed petition was filed in response to a dismissal of the original petition filed 29 April 2005. In a decision mailed July 11, 2005, the petition was dismissed for failure to provide a detailed discussion of the references, which discussion points out with the particularity required by 37 CFR 1.111(b) and (c), how the claimed subject matter is patentable over the references.

Applicants' submission filed 10 August 2005 corrects the deficiency noted in the original decision. The combined submissions meet all the criteria set out above. Accordingly, the petition is **GRANTED**.

The application file is being forwarded to the Examiner of Record for accelerated examination according to the procedures set forth in MPEP § 708.02, Section VIII.

Pinchus M. Laufer
Special Program Examiner
Technology Center 2100
Computer Architecture, Software and Information Security
571-272-3599

ds

UNITED STATES PATENT AND TRADEMARK OFFICE

Commissioner for Patents
United States Patent and Trademark Office
P.O. Box 1450
Alexandria, VA 22313-1450
www.uspto.gov

ARTHUR KAESLER
2085 GILBRIDE RD.
MARTINSVILLE, NJ 08836

In re Application of

Arthur Kaesler

Application No. 10/814,709

Filed: March 31, 2004

Attorney Docket No.

DECISION ON PETITION

FAX RECEIVED
MAY 26 2005
OFFICE OF PETITIONS

This is a decision on the petition under 37 CFR 1.137(b), filed April 25, 2005, to revive the above-identified application.

The petition is **GRANTED**.

The above-cited application became abandoned for failure to reply in a timely manner to the restriction/election requirement mailed August 25, 2004, which set a shortened period for reply of one month from its mailing date. No extensions of time were obtained within the allowable period. Accordingly, the application became abandoned on September 26, 2004.

The election filed April 25, 2005, is noted.

The application is being forwarded to Technology Center 3700, GAU 3742 for further processing.

Telephone inquiries concerning this decision should be directed to the undersigned at (571) 272-3222.

Kenya A. McLaughlin
Petitions Attorney
Office of Petitions

UNITED STATES PATENT AND TRADEMARK OFFICE

UNITED STATES DEPARTMENT OF COMMERCE
United States Patent and Trademark Office
Address: COMMISSIONER FOR PATENTS
P.O. Box 1450
Alexandria, Virginia 22313-1450
www.uspto.gov

WOOD, HERRON & EVANS, LLP (TOKYO ELECTRON)
2700 CAREW TOWER
441 VINE STREET
CINCINNATI, OH 45202

Mail Date: 04/20/2010

Applicant	: Raymond Joe	: DECISION ON REQUEST FOR
Patent Number	: 7604841	: RECALCULATION of PATENT
Issue Date	: 10/20/2009	: TERM ADJUSTMENT IN VIEW
Appliction No	: 10/814,713	: OF WYETH AND NOTICE OF INTENT TO
Filed	: 03/31/2004	: ISSUE CERTIFICATE OF CORRECTION
		:

The Request for Recalculation is **GRANTED** to the extent indicated.

The patent term adjustment has been determined to be **1487** days. The USPTO will *sua sponte* issue a certificate of correction reflecting the amount of PTA days determined by the recalculation.

Prior to the issuance of the certificate of correction, the USPTO will afford patentee an opportunity to be heard and request reconsideration. Accordingly, patentee has **one month or thirty (30) days**, whichever is longer, to file a request for reconsideration of this patent term adjustment calculation. See 35 U.S.C. 154(b)(3)(B)(ii) and 37 CFR 1.322(a)(4). No extensions of time will be granted under 37 CFR 1.136.

Patentee should use document code PET.OP if electronically filing a request for reconsideration of this patent term adjustment calculation. The patentee must also include the information required by 37 CFR 1.705(b)(2) and the fee required by 37 CFR 1.18(e). If patentee does not file a timely request for reconsideration of this patent term adjustment calculation including the information required by 37 CFR 1.705(b)(2) and the fee required by 37 CFR 1.18(e), the USPTO will issue a certificate of correction reflecting the PTA determination noted above.

Patentee should be aware that in order to preserve the right to review in the United States District Court for the District of Columbia of the USPTO patent term adjustment determination, patentee must ensure that he or she also take the steps required under 35 U.S.C. 154(b)(4)(A) in a timely manner. Nothing in the request for recalculation should be construed as providing an alternative time frame for commencing a civil action under 35 U.S.C. 154(b)(4)(A).

Any questions concerning this decision should be directed to the Office of Patent Legal Administration at 571-272-7702.

UNITED STATES PATENT AND TRADEMARK OFFICE

Commissioner for Patents
United States Patent and Trademark Office
P.O. Box 1450
Alexandria, VA 22313-1450
www.uspto.gov

HITACHI GLOBAL STORAGE TECHNOLOGIES, INC.
5600 COTTLE ROAD, NHGB/0142
IP DEPARTMENT
SAN JOSE CA 95193

COPY MAILED

MAY 09 2008

OFFICE OF PETITIONS

In re Application of

Quang Lee

Application No. 10/814,716

Filed: March 31, 2004

Attorney Docket No. HITG.074CIP1

DECISION ON PETITION

This is a decision on the petition under 37 CFR §1.137(b), February 1, 2008, to revive the above-identified application.

The petition is **granted**.

This application became abandoned for failure to timely file corrected drawings as required by the Notice of Allowability (the "Notice") mailed September 20, 2007. The Notice set forth a three (3) month statutory period for reply. No response was received within the allowable period. Accordingly, this application became abandoned on December 21, 2007. A Notice of Abandonment was mailed January 16, 2008.

The corrected drawings filed February 1, 2008, are noted.

The address cited on the petition differs from the address of record. Although a courtesy copy of this decision is being mailed to the address cited on the petition, all future correspondence will be mailed solely to the address of record until appropriate written instructions to the contrary are received.

The application is being forwarded to the Office of Data Management for further processing.

Telephone inquiries concerning this decision may be directed to the undersigned at (571) 272-3222.

Kenya A. McLaughlin
Petitions Attorney
Office of Petitions

cc:
David W. Lynch
Merchant & Gould
324 S. Washington Street
Maryville, TN 37804

UNITED STATES PATENT AND TRADEMARK OFFICE

Commissioner for Patents
United States Patent and Trademark Office
P.O. Box 1450
Alexandria, VA 22313-1450
www.uspto.gov

TRIANGLE PATENTS, P.L.L.C.
P.O. BOX 28539
RALEIGH NC 27611-8539

In re Application of
Lipson
Application No. 10/814,726
Filed: March 31, 2004
Attorney Docket No. 4023-001
For: PUBLIC KEY CRYPTOGRAPHIC METHODS AND SYSTEMS

ON PETITION
MAILED
JUL 19 2010
OFFICE OF PETITIONS

This is a decision on the petition under 37 CFR 1.137(b), filed May 12, 2010, to revive the above-identified application.

This application became abandoned for failure to timely respond to the final Office action mailed August 4, 2009, which set an extendable three month period for reply. Accordingly, this application became abandoned on November 5, 2009. A Notice of Abandonment was mailed on February 18, 2010.

Applicant has submitted a RCE and required $405.00 fee and amendment in reply to the August 4, 2009 final Office action, an acceptable statement of the unintentional nature of the delay in responding to the August 4, 2009 final Office action, and the $810.00 petition fee.

37 CFR 1.137(b)(3) requires a statement that "the entire delay in filing the required reply from the due date for the reply until the filing of a grantable petition pursuant to 37 CFR 1.137(b) was unintentional." Since the statement appearing in the petition varies from the language required by 37 CFR 1.137(b)(3), the statement is being construed as the required statement. Petitioner must notify the Office if this is **not** a correct reading of the statement appearing in the petition.

The petition is **GRANTED**.

After the mailing of this decision the application will be forwarded to Technology Center AU 2431 for consideration of the RCE and amendment filed on May 12, 2010.

Telephone inquiries pertaining to this decision may be directed to the undersigned at (571) 272-3230.

Shirene Willis Brantley
Senior Petitions Attorney
Office of Petitions

UNITED STATES PATENT AND TRADEMARK OFFICE

Commissioner for Patents
United States Patent and Trademark Office
P.O. Box 1450
Alexandria, VA 22313-1450
www.uspto.gov

COPY MAILED

AUG 05 2009

OFFICE OF PETITIONS

HOWREY LLP-CA
C/O IP DOCKETING DEPARTMENT
2941 FAIRVIEW PARK DRIVE, SUITE 200
FALLS CHURCH, VA 22042-2924

In re Application of	:	
Kha H. Nguyen, et al.	:	
Application No.: 10/814,729	:	ON PETITION
Filed: March 30, 2004	:	
Attorney Docket No.: 02453.0029.NPUS00	:	

This is a decision on the petition, filed August 4, 2009, under 37 CFR 1.313(c)(2) to withdraw the above-identified application from issue after payment of the issue fee.

The petition is **GRANTED**.

The above-identified application is withdrawn from issue for consideration of a submission under 37 CFR 1.114 (request for continued examination). See 37 CFR 1.313(c)(2).

Petitioner is advised that the issue fee paid on July 17, 2009, cannot be refunded. If, however, this application is again allowed, petitioner may request that it be applied towards the issue fee required by the new Notice of Allowance.[1]

The file does not indicate a change of address has been submitted, although the address given on the petition differs from the address of record. If appropriate, a change of address should be filed in accordance with MPEP 601.03. A courtesy copy of this decision is being mailed to the address given on the petition; however, the Office will mail all future correspondence solely to the address of record.

Telephone inquiries relating to this decision should be directed to the undersigned at (571) 272-3204.

[1] *The request to apply the issue fee to the new Notice may be satisfied by completing and returning the new Part B – Fee(s) Transmittal Form (along with any balance due at the time of submission). Petitioner is advised that the Issue Fee Transmittal Form* ***must*** *be completed and timely submitted to avoid abandonment of the application.*

The application is being referred to Technology Center AU 2416 for further processing of the request for continued examination under 37 CFR 1.114.

/SDB/

Sherry D. Brinkley
Petitions Examiner
Office of Petitions

cc: ROBERT C. LAURENSON
HOWREY LLP
4 PARK PLAZA, SUITE 1700
IRVINE, CA 92614-8200

UNITED STATES PATENT AND TRADEMARK OFFICE

COMMISSIONER FOR PATENTS
UNITED STATES PATENT AND TRADEMARK OFFICE
P.O. BOX 1450
ALEXANDRIA, VA 22313-1450
www.uspto.gov

JUN 30 2004

WILSON SONSINI GOODRICH & ROSATI
650 PAGE MILL ROAD
PALO ALTO CA 94304-1050

In re Application of	:
Dominique Charmot et al	:
Serial No.: 10/814,749	: PETITION TO MAKE SPECIAL
Filed: March 30, 2004	:
Attorney Docket No.: 29329-715.201	:

This is in response to applicants' petition filed March 30, 2004, to make the above-identified application special under the provisions of 37 CFR 1.102(c), based on the age of the applicant.

Applicant has satisfied the provisions set forth in M.P.E.P. 708.02, IV. Therefor the petition is **GRANTED**.

The application will be forwarded to the examiner for action on the merits commensurate with this decision.

Should there be any questions with regard to this letter please contact William R. Dixon, Jr. by letter addressed to the Director, Technology Center 1600, PO BOX 1450, ALEXANDRIA, VA 22313-1450, or by telephone at 571-272-0519 or by facsimile transmission to the general Office facsimile number 703-872-9306.

William R. Dixon, Jr.
Special Program Examiner
Technology Center 1600

UNITED STATES PATENT AND TRADEMARK OFFICE

COMMISSIONER FOR PATENTS
UNITED STATES PATENT AND TRADEMARK OFFICE
P.O. BOX 1450
ALEXANDRIA, VA 22313-1450
www.uspto.gov

Paper No.

John C. Alemanni
PATENT DEPARTMENT
KILPATRICK STOCKTON LLP
1001 West Fourth Street
Winston-Salem, NC 27101

MAIL

JUN 0 2 2005

DIRECTOR OFFICE
TECHNOLOGY CENTER 2100

In re Application of:
David Marmaros et al.
Application No. 10/814,766
Filed: March 31, 2004
For: METHODS AND SYSTEMS FOR PROCESSING INSTANT MESSENGER MESSAGES

DECISION ON REQUEST TO WITHDRAW AS ATTORNEY OR AGENT

This is a decision on the Request To Withdraw from Representation filed March 10, 2005.

A grantable request to withdraw as attorney of record should indicate thereon the present mailing addresses of the attorney(s) who is/are withdrawing from the record and of the applicant. The request for withdrawal must be signed by every attorney seeking to withdraw or contain a clear indication that one attorney is signing on behalf of another/others. A request to withdraw will not be approved unless at least 30 (thirty) days would remain between the date of approval and the later of the expiration date of a time to file a response or the expiration date of the maximum time period which can be extended under 37 C.F.R. § 1. 136(a). The effective date of withdrawal being the date of decision and not the date of request. See M.P.E.P. § 402.06. 37 C.F.R. § 1.36 further requires that the applicant or patent owner be notified of the withdrawal of the attorney or agent.

The request filed March 10, 2005 meets all the requirements. Accordingly the request is **GRANTED**.

All future communications from the Office will be directed to the below-listed address until otherwise notified by applicant. This correspondence address is provided by the withdrawn attorney(s). Applicant is reminded of the obligation to promptly notify the Patent and Trademark Office (Office) of any change in correspondence address to ensure receipt of all communications from the Office.

James R. Matthews

for Vincent N. Trans
Special Program Examiner
Technology Center 2100
Computer Architecture, Software, and
Information Security
(571) 272-3613

cc: Sabra-Anne R. Truesdale
c/o FENWICK & WEST LLP
SILICON VALLEY CENTER
801 California Street
Mountain View, CA 94041

UNITED STATES PATENT AND TRADEMARK OFFICE

Commissioner for Patents
United States Patent and Trademark Office
P.O. Box 1450
Alexandria, VA 22313-1450
www.uspto.gov

SQUIRE, SANDERS & DEMPSEY L.L.P.
8000 TOWERS CRESCENT DRIVE
14TH FLOOR
VIENNA VA 22182-6212

COPY MAILED

SEP 1 1 2008

In re Patent No. 7,214,516 :

Issue Date: May 8, 2007 :

Application No. 10/814,788 : ON PETITION

Filed: April 1, 2004 :

Attorney Docket No. 58501.00047

This is a decision on the petition filed August 16, 2007, and in supplement on August 20, 2008, which is being treated as a request under 37 CFR 3.81(b)[1] to correct the assignee on the front page of the above-identified patent by way of a Certificate of Correction.

The request is **granted**.

Telephone inquiries concerning this matter may be directed to the undersigned at (571) 272-3222. Any questions concerning the issuance of the Certificate of Correction should be directed to the Certificate of Correction Branch at (703) 305-8309.

The file is being forwarded to the Certificates of Correction Branch for issuance of the requested Certificate of Correction.

Kenya A. McLaughlin
Petitions Attorney
Office of Petitions

[1] See *Official Gazette* of June 22, 2004.

UNITED STATES PATENT AND TRADEMARK OFFICE

Commissioner for Patents
United States Patent and Trademark Office
P.O. Box 1450Alexandria, VA 22313-1450
www.uspto.gov

TRASK BRITT
P.O. BOX 2550
SALT LAKE CITY UT 84110

COPY MAILED

JAN 0 6 2005

OFFICE OF PETITIONS

In re Application of
Keith E. Dionne et al.
Application No. 10/814,801
Filed: March 31, 2004
Attorney Docket No. 3139-6349.1US

: DECISION REFUSING STATUS
: UNDER 37 CFR 1.47(a)

This decision is in response to the petition filed December 14, 2004, under 37 CFR 1.47(a), in response to the Notice to File Missing Parts "Notice" mailed June 14, 2004.

The petition is **DISMISSED**.

Rule 47 applicant is given TWO MONTHS from the mailing date of this decision to respond, correcting the below-noted deficiencies. Any response should be entitled "Request for Reconsideration of Petition Under 37 CFR 1.47(a)" and may include an oath or declaration executed by the inventor. **Failure to respond will result in abandonment of the application.** Any extensions of time will be governed by 37 CFR 1.136(a).

The above-identified application was filed on March 31, 2004, naming Keith E. Dionne, Robert Mosbauer, Craig R. Davis and John R. Peery, but without a signed declaration. Accordingly, on June 14, 2004, a "Notice To File Missing Parts of Application" was mailed, requiring *inter alia* a properly executed oath or declaration.

In response, the present petition was filed with a request for a four month extension of time and the oath and declaration signed by inventors Dionne, Davis and Peery only. Petitioners seek status under 37 CFR 1.47(a) based on the fact that correspondences have been sent by mail and email as well as phone calls/messages, but that in spite of those efforts to have the oath or declaration executed, Mr. Mosbauer has not complied with the requests.

A grantable petition under 37 CFR 1.47(a) requires:

(1) proof that the non-signing inventor cannot be reached or refuses to sign the oath or declaration after having been presented with the application papers (specification, claims and drawings);

(2) an acceptable oath or declaration in compliance with 35 U.S.C. §§ 115 and 116;

(3) the petition fee; and

(4) a statement of the last known address of the non-signing inventor.

The present petition lacks item (1).

In regards to item (1), petitioners have not provided sufficient proof that a copy of the application (specification, including claims, drawings, if any, and the declaration) was sent to the non-signing inventor. The "Declaration by Debra Mitchell regarding efforts to reach Robert Mosbauer", reveal that the declaration was sent to Mr. Mosbauer electronically and via FedEx, but don't indicate that the complete application was ever sent to Mr. Mosbauer. Thus, there is no evidence to show that Mr. Mosbauer had the benefit of reviewing the application.

Petitioners may show proof that a copy of the application was sent or given to the non-signing inventors for review by providing a copy of the cover letter transmitting the application papers to the non-signing inventors or details given in an affidavit or declaration of facts by a person having first hand knowledge of the details.

Likewise, before a *bona fide* refusal can be shown, the non-signing inventor must have been given an opportunity to review the application. Therefore, petitioners must show proof that the non-signing inventor refuses to sign the declaration after being sent or given a copy of the application papers. If there is a written refusal, petitioners should submit a copy of that refusal with any renewed petition. If the refusal was made orally to a person, then that person must provide details of the refusal in an affidavit or declaration of facts.

With respect to the petition fee, please be advised that effective November 22, 2004, the petition fee has been increased to $200.00. Therein, deposit account no. 20-1469 will be charged in the amount of $70.00 to make up the difference between that which was paid and that which is due pursuant to 37 CFR 1.17(g). See the Notice published in the Federal Register on September 21, 2004 and in the Official Gazette of the United States Patent and Trademark Office on October 12, 2004.

Further correspondence with respect to this matter should be addressed as follows:

By mail: Mail Stop Petitions
Commissioner for Patents
P.O. Box 1450
Alexandria, VA 22313-1450

By FAX: (703) 872-9306
Office of Petitions

Telephone inquiries concerning this matter may be directed to the undersigned Petitions Attorney at (571) 272-3212.

Patricia Faison-Ball

Patricia Faison-Ball
Senior Petitions Attorney
Office of Petitions

UNITED STATES PATENT AND TRADEMARK OFFICE

Commissioner for Patents
United States Patent and Trademark Office
P.O. Box 1450Alexandria, VA 22313-1450
www.uspto.gov

TRASK BRITT
P.O. BOX 2550
SALT LAKE CITY UT 84110

COPY MAILED

JUL 26 2006

OFFICE OF PETITIONS

In re Application of
Keith E. Dionne et al.
Application No. 10/814,801
Filed: March 31, 2004
Attorney Docket No. 3139-6349.1US

DECISION ACCORDING STATUS
UNDER 37 CFR 1.47(a)

This decision is in response to the request for reconsideration petition filed March 7, 2005, under 37 CFR 1.47(a), in response to the decision mailed January 5, 2005, dismissing the petition filed December 14, 2004.

The petition is **GRANTED.**

The above-identified application was filed on March 31, 2004, naming Keith E. Dionne, Robert Mosbauer, Craig R. Davis and John R. Peery, but without a signed declaration. Accordingly, on June 14, 2004, a "Notice To File Missing Parts of Application" was mailed, requiring *inter alia* a properly executed oath or declaration. In response, a petition was filed December 14, 2004 with a request for a four month extension of time and the oath and declaration signed by inventors Dionne, Davis and Peery only. The petition was dismissed January 6, 2005, the petition was dismissed because the petitioners failed to show that a complete application had been sent to non-signing inventor Mosbauer.

A grantable petition under 37 CFR 1.47(a) requires: (1) proof that the non-signing inventor cannot be reached or refuses to sign the oath or declaration after having been presented with the application papers (specification, claims and drawings); (2) an acceptable oath or declaration in compliance with 35 U.S.C. §§ 115 and 116; (3) the petition fee; and (4) a statement of the last known address of the non-signing inventor. The above-identified application and papers have been reviewed and found in compliance with 37 CFR 1.47(a). In view thereof, this application is hereby accorded Rule 1.47(a) status.

In response to the decision dismissing the petition filed December 14, 2004, the instant petition shows that a complete application has been sent to non-signing inventor Robert Mosbauer and that he has, by his actions, refused to cooperate with the filing of the instant application.

All requirements under 37 CFR 1.47(a) therefore having been met, as provided in Rule 1.47(c), this Office will forward notice of this application's filing to the non-signing inventor at the address given in the petition. Notice of the filing of this application will also be published in the Official Gazette.

This matter is being referred to Technology Center 1615 for further examination in due course.

Telephone inquiries related to this decision should be directed to the undersigned Petitions Attorney at (571) 272-3212.

Patricia Faison-Ball

Patricia Faison-Ball
Senior Petitions Attorney
Office of Petitions

UNITED STATES PATENT AND TRADEMARK OFFICE

UNITED STATES DEPARTMENT OF COMMERCE
United States Patent and Trademark Office
Address: COMMISSIONER FOR PATENTS
P.O. Box 1450
Alexandria, Virginia 22313-1450
www.uspto.gov

GARDERE WYNNE SEWELL LLP
INTELLECTUAL PROPERTY SECTION
3000 THANKSGIVING TOWER
1601 ELM ST
DALLAS, TX 75201-4761

Mail Date: 04/21/2010

Applicant	: Pierre Busson	: DECISION ON REQUEST FOR
Patent Number	: 7643634	: RECALCULATION of PATENT
Issue Date	: 01/05/2010	: TERM ADJUSTMENT IN VIEW
Appliction No	: 10/814,818	: OF WYETH AND NOTICE OF INTENT TO
Filed	: 03/31/2004	: ISSUE CERTIFICATE OF CORRECTION
		:

The Request for Recalculation is **GRANTED** to the extent indicated.

The patent term adjustment has been determined to be **1076** days. The USPTO will *sua sponte* issue a certificate of correction reflecting the amount of PTA days determined by the recalculation.

Prior to the issuance of the certificate of correction, the USPTO will afford patentee an opportunity to be heard and request reconsideration. Accordingly, patentee has **one month or thirty (30) days**, whichever is longer, to file a request for reconsideration of this patent term adjustment calculation. See 35 U.S.C. 154(b)(3)(B)(ii) and 37 CFR 1.322(a)(4). No extensions of time will be granted under 37 CFR 1.136.

Patentee should use document code PET.OP if electronically filing a request for reconsideration of this patent term adjustment calculation. The patentee must also include the information required by 37 CFR 1.705(b)(2) and the fee required by 37 CFR 1.18(e). If patentee does not file a timely request for reconsideration of this patent term adjustment calculation including the information required by 37 CFR 1.705(b)(2) and the fee required by 37 CFR 1.18(e), the USPTO will issue a certificate of correction reflecting the PTA determination noted above.

Patentee should be aware that in order to preserve the right to review in the United States District Court for the District of Columbia of the USPTO patent term adjustment determination, patentee must ensure that he or she also take the steps required under 35 U.S.C. 154(b)(4)(A) in a timely manner. Nothing in the request for recalculation should be construed as providing an alternative time frame for commencing a civil action under 35 U.S.C. 154(b)(4)(A).

Any questions concerning this decision should be directed to the Office of Patent Legal Administration at 571-272-7702.

UNITED STATES PATENT AND TRADEMARK OFFICE

UNITED STATES DEPARTMENT OF COMMERCE
United States Patent and Trademark Office
Address: COMMISSIONER FOR PATENTS
P.O. Box 1450
Alexandria, Virginia 22313-1450
www.uspto.gov

MINTZ, LEVIN, COHN, FERRIS, GLOVSKY & POPEO, P.C.
ONE FINANCIAL CENTER
BOSTON, MA 02111

Mail Date: 05/07/2010

Applicant	: Gerd Forstmann	: DECISION ON REQUEST FOR
Patent Number	: 7620893	: RECALCULATION of PATENT
Issue Date	: 11/17/2009	: TERM ADJUSTMENT IN VIEW
Application No	: 10/814,835	: OF WYETH AND NOTICE OF INTENT TO
Filed	: 03/31/2004	: ISSUE CERTIFICATE OF CORRECTION
		:

The Request for Recalculation is **GRANTED** to the extent indicated.

The patent term adjustment has been determined to be **951** days. The USPTO will *sua sponte* issue a certificate of correction reflecting the amount of PTA days determined by the recalculation.

Prior to the issuance of the certificate of correction, the USPTO will afford patentee an opportunity to be heard and request reconsideration. Accordingly, patentee has **one month or thirty (30) days**, whichever is longer, to file a request for reconsideration of this patent term adjustment calculation. See 35 U.S.C. 154(b)(3)(B)(ii) and 37 CFR 1.322(a)(4). No extensions of time will be granted under 37 CFR 1.136.

Patentee should use document code PET.OP if electronically filing a request for reconsideration of this patent term adjustment calculation. The patentee must also include the information required by 37 CFR 1.705(b)(2) and the fee required by 37 CFR 1.18(e). If patentee does not file a timely request for reconsideration of this patent term adjustment calculation including the information required by 37 CFR 1.705(b)(2) and the fee required by 37 CFR 1.18(e), the USPTO will issue a certificate of correction reflecting the PTA determination noted above.

Patentee should be aware that in order to preserve the right to review in the United States District Court for the District of Columbia of the USPTO patent term adjustment determination, patentee must ensure that he or she also take the steps required under 35 U.S.C. 154(b)(4)(A) in a timely manner. Nothing in the request for recalculation should be construed as providing an alternative time frame for commencing a civil action under 35 U.S.C. 154(b)(4)(A).

Any questions concerning this decision should be directed to the Office of Patent Legal Administration at 571-272-7702.

UNITED STATES DEPARTMENT OF COMMERCE
COMMISSIONER FOR PATENTS
P. O. BOX 1450
ALEXANDRIA, VA 22313-1450

Date	: 10/21/2009
Patent No.	: 7,528,977 B2
Serial No.	: 10/814,846
Inventor(s)	: Hull et al.
Issue Date	: May 5, 2009
Title	: **PRINTER WITH HARDWARE AND SOFTWARE INTERFACES FOR PERIPHERAL DEVICES**
Doc./File No.	: **20412-08382**

Re: Certificate of Correction

Consideration has been given your request for a certificate of correction, for the above-identified patent under the provisions of Rule 1.322.

Respecting the alleged error(s) in your request Respecting the alleged error(s) in the References Cited, the patent is printed in accordance with the record, since there is no record of a 1449 or 892 with reference(s) considered by the Examiner.

In view of the foregoing, your request in this matter is denied.

Further consideration will be given concerning this matter upon receipt of a request for **Reconsideration** (reconsideration should be accompanied by supporting document(s) such as, amendment, postcard receipt, 1449/892, etc.) and should be filed and directed to Decisions & Certificates of Correction Branch.

Ernest C. White, *LIE* (703) 756-1590
ernest.white@uspto.gov
Mary F. Diggs, *Supervisor* (703) 756-1580
Decisions & Certificates of Correction Branch

RICOH/FENWICK
SILICON VALLEY CENTER
801 CALIFORNIA STREET
MOUNTAIN VIEW CA 94041

ecw

UNITED STATES PATENT AND TRADEMARK OFFICE

UNITED STATES DEPARTMENT OF COMMERCE
United States Patent and Trademark Office
Address: COMMISSIONER FOR PATENTS
P.O. Box 1450
Alexandria, Virginia 22313-1450
www.uspto.gov

O'BANION & RITCHEY LLP/ SONY ELECTRONICS, INC.
400 CAPITOL MALL
SUITE 1550
SACRAMENTO, CA 95814

Mail Date: 04/21/2010

Applicant	: Yoshifumi Nishida	: DECISION ON REQUEST FOR
Patent Number	: 7609697	: RECALCULATION of PATENT
Issue Date	: 10/27/2009	: TERM ADJUSTMENT IN VIEW
Appliction No	: 10/814,847	: OF WYETH AND NOTICE OF INTENT TO
Filed	: 03/30/2004	: ISSUE CERTIFICATE OF CORRECTION
		:

The Request for Recalculation is **GRANTED** to the extent indicated.

The patent term adjustment has been determined to be **1221** days. The USPTO will *sua sponte* issue a certificate of correction reflecting the amount of PTA days determined by the recalculation.

Prior to the issuance of the certificate of correction, the USPTO will afford patentee an opportunity to be heard and request reconsideration. Accordingly, patentee has **one month or thirty (30) days**, whichever is longer, to file a request for reconsideration of this patent term adjustment calculation. See 35 U.S.C. 154(b)(3)(B)(ii) and 37 CFR 1.322(a)(4). No extensions of time will be granted under 37 CFR 1.136.

Patentee should use document code PET.OP if electronically filing a request for reconsideration of this patent term adjustment calculation. The patentee must also include the information required by 37 CFR 1.705(b)(2) and the fee required by 37 CFR 1.18(e). If patentee does not file a timely request for reconsideration of this patent term adjustment calculation including the information required by 37 CFR 1.705(b)(2) and the fee required by 37 CFR 1.18(e), the USPTO will issue a certificate of correction reflecting the PTA determination noted above.

Patentee should be aware that in order to preserve the right to review in the United States District Court for the District of Columbia of the USPTO patent term adjustment determination, patentee must ensure that he or she also take the steps required under 35 U.S.C. 154(b)(4)(A) in a timely manner. Nothing in the request for recalculation should be construed as providing an alternative time frame for commencing a civil action under 35 U.S.C. 154(b)(4)(A).

Any questions concerning this decision should be directed to the Office of Patent Legal Administration at 571-272-7702.

UNITED STATES PATENT AND TRADEMARK OFFICE

Commissioner for Patents
United States Patent and Trademark Office
P.O. Box 1450
Alexandria, VA 22313-1450
www.uspto.gov

DALY, CROWLEY, MOFFORD & DURKEE, LLP
SUITE 301A
354A TURNPIKE STREET
CANTON MA 02021-2714

MAILED

SEP 29 2009

OFFICE OF PETITIONS

In re Application of	:	
Maurizio Fava, et al.	:	
Application No. 10/814,852	:	DECISION GRANTING PETITION
Filed: March 31, 2004	:	UNDER 37 CFR 1.313(c)(2)
Attorney Docket No. MGH-028AUS	:	

This is a decision on the petition under 37 CFR 1.313(c)(2), filed September 29, 2009, to withdraw the above-identified application from issue after payment of the issue fee.

The petition is **GRANTED**.

The above-identified application is withdrawn from issue for consideration of a submission under 37 CFR 1.114 (request for continued examination). *See* 37 CFR 1.313(c)(2).

Petitioner is advised that the issue fee paid on August 24, 2009 cannot be refunded. If, however, this application is again allowed, petitioner may request that it be applied towards the issue fee required by the new Notice of Allowance.[1]

Telephone inquiries should be directed to Terri Johnson at (571) 272-2991.

This application is being referred to Technology Center AU 3626 for processing of the request for continued examination under 37 CFR 1.114 and for consideration of the concurrently filed information disclosure statement.

Terri Johnson
Petitions Examiner
Office of Petitions

---

[1] *The request to apply the issue fee to the new Notice may be satisfied by completing and returning the new Part B – Fee(s) Transmittal Form (along with any balance due at the time of submission). Petitioner is advised that the Issue Fee Transmittal Form must be completed and timely submitted to avoid abandonment of the application.*

UNITED STATES PATENT AND TRADEMARK OFFICE

UNITED STATES DEPARTMENT OF COMMERCE
United States Patent and Trademark Office
Address: COMMISSIONER FOR PATENTS
P.O. Box 1450
Alexandria, Virginia 22313-1450
www.uspto.gov

DALY, CROWLEY, MOFFORD & DURKEE, LLP
SUITE 301A
354A TURNPIKE STREET
CANTON, MA 02021-2714

Mail Date: 05/13/2010

Applicant	: Maurizio Fava	: DECISION ON REQUEST FOR
Patent Number	: 7647235	: RECALCULATION of PATENT
Issue Date	: 01/12/2010	: TERM ADJUSTMENT IN VIEW
Application No	: 10/814,852	: OF WYETH AND NOTICE OF INTENT TO
Filed	: 03/31/2004	: ISSUE CERTIFICATE OF CORRECTION
		:

The Request for Recalculation is **GRANTED** to the extent indicated.

The patent term adjustment has been determined to be **1507** days. The USPTO will *sua sponte* issue a certificate of correction reflecting the amount of PTA days determined by the recalculation.

Prior to the issuance of the certificate of correction, the USPTO will afford patentee an opportunity to be heard and request reconsideration. Accordingly, patentee has **one month or thirty (30) days**, whichever is longer, to file a request for reconsideration of this patent term adjustment calculation. See 35 U.S.C. 154(b)(3)(B)(ii) and 37 CFR 1.322(a)(4). No extensions of time will be granted under 37 CFR 1.136.

Patentee should use document code PET.OP if electronically filing a request for reconsideration of this patent term adjustment calculation. The patentee must also include the information required by 37 CFR 1.705(b)(2) and the fee required by 37 CFR 1.18(e). If patentee does not file a timely request for reconsideration of this patent term adjustment calculation including the information required by 37 CFR 1.705(b)(2) and the fee required by 37 CFR 1.18(e), the USPTO will issue a certificate of correction reflecting the PTA determination noted above.

Patentee should be aware that in order to preserve the right to review in the United States District Court for the District of Columbia of the USPTO patent term adjustment determination, patentee must ensure that he or she also take the steps required under 35 U.S.C. 154(b)(4)(A) in a timely manner. Nothing in the request for recalculation should be construed as providing an alternative time frame for commencing a civil action under 35 U.S.C. 154(b)(4)(A).

Any questions concerning this decision should be directed to the Office of Patent Legal Administration at 571-272-7702.

UNITED STATES PATENT AND TRADEMARK OFFICE

Commissioner for Patents
United States Patent and Trademark Office
P.O. Box 1450
Alexandria, VA 22313-1450
www.uspto.gov

THELEN REID & PRIEST
IMPJ
P.O. BOX 640640
SAN JOSE ,CA 95164-0640

COPY MAILED

MAR 1 6 2005

OFFICE OF PETITIONS

In re Application of	:	
Christopher J. Diorio et al	:	
Application No. 10/814,866	:	LETTER
Filed: March 30, 2004	:	
Attorney Docket No. IMPJ-0027B	:	

This is in response to the paper filed September 16, 2004, which is being treated under 37 CFR 1.27(g)(2), requesting that status as a Small Entity be removed.

In accordance with the September 16, 2004 request, status as a Small Entity has been removed.

This matter is being referred to Technology Center AU 2818 for examination in due course.

Wan Laymon
Petitions Examiner
Office of Petitions
Office of the Deputy Commissioner
for Patent Examination Policy

UNITED STATES PATENT AND TRADEMARK OFFICE

Commissioner for Patents
United States Patent and Trademark Office
P.O. Box 1450
Alexandria, VA 22313-1450
www.uspto.gov

THELEN REID & PRIEST
IMPJ
P.O. BOX 640640
SAN JOSE, CA 95164-0640

COPY MAILED

APR 13 2005

OFFICE OF PETITIONS

In re Application of
Frederic J. Bernard et al
Application No. 10/814,867
Filed: March 30, 2004
Attorney Docket No. IMPJ-0031

NOTICE

This is a notice regarding your request for acceptance of a fee deficiency submission under 37 CFR 1.28. On September 1, 1998, the Court of Appeals for the Federal Circuit held that 37 CFR 1.28(c) is the sole provision governing the time for correction of the erroneous payment of the issue fee as a small entity. **See DH Technology v. Synergystex International, Inc. 154 F.3d 1333, 47 USPQ2d 1865 (Fed. Cir. Sept. 1, 1998).**

The Office no longer investigates or rejects original or reissue applications under 37 CFR 1.56. **1098 Off. Gaz. Pat. Office 502 (January 3, 1989).** Therefore, nothing in this Notice is intended to imply that an investigation was done.

Your fee deficiency submission under 37 CFR 1.28 is hereby **ACCEPTED**.

Inquiries related to this communication should be directed to the Office of Petitions Staff at (703) 305-9285.

This matter is being referred to Technology Center AU 2816 for examination in due course.

Wan Laymon
Petitions Examiner
Office of Petitions
Office of the Deputy Commissioner
for Patent Examination Policy

UNITED STATES PATENT AND TRADEMARK OFFICE

Commissioner for Patents
United States Patent and Trademark Office
P.O. Box 1450
Alexandria, VA 22313-1450
www.uspto.gov

THELEN REID & PRIEST
DAVID B. RITCHIE
P.O. BOX 640640
SAN JOSE, CA 95164-0640

COPY MAILED

MAR 0 8 2006

OFFICE OF PETITIONS

ON PETITION

In re Application of :
Frederic J. Bernard et al :
Application No. 10/814,867 :
Filed: March 30, 2004 :
Attorney Docket No. IMPJ-0031 :

This is a decision on the petition under 37 CFR 1.313(c), filed March 2, 2006, which is being treated under 37 CFR 1.313(c)(2), to withdraw the above-identified application from issue after payment of the issue fee.

The petition is **GRANTED**.

The above-identified application is withdrawn from issue for consideration of a submission under 37 CFR 1.114 (request for continued examination). See 37 CFR 1.313(c)(2).

Petitioner is advised that the issue fee paid on January 18, 2006 in the above-identified application cannot be refunded. If, however, the above-identified application is again allowed, petitioner may request that it be applied towards the issue fee required by the new Notice of Allowance.[1]

Telephone inquiries should be directed to Wan Laymon at (571) 272-3220.

This matter is being referred to Technology Center AU 2816 for processing of the request for continued examination under 37 CFR 1.114.

Wan Laymon
Petitions Examiner
Office of Petitions

---

[1] The request to apply the issue fee to the new Notice may be satisfied by completing and returning the new Issue Fee Transmittal Form PTOL-85(b), which includes the following language thereon: "Commissioner for Patents is requested to apply the Issue Fee and Publication Fee (if any) or re-apply any previously paid issue fee to the application identified above." Petitioner is advised that, whether a fee is indicated as being due or not, the Issue Fee Transmittal Form **must** be completed and timely submitted to avoid abandonment. Note the language in bold text on the first page of the Notice of Allowance and Fee(s) Due (PTOL-85).

UNITED STATES PATENT AND TRADEMARK OFFICE

Commissioner for Patents
United States Patent and Trademark Office
P.O. Box 1450
Alexandria, VA 22313-1450
www.uspto.gov

THELEN REID & PRIEST
IMPJ
P.O. BOX 640640
SAN JOSE ,CA 95164-0640

COPY MAILED

MAR 1 6 2005

OFFICE OF PETITIONS

In re Application of :
Christopher J. Diorio et al :
Application No. 10/814,868 : LETTER
Filed: March 30, 2004 :
Attorney Docket No. IMPJ-0027C :

This is in response to the paper filed September 16, 2004, which is being treated under 37 CFR 1.27(g)(2), requesting that status as a Small Entity be removed.

In accordance with the September 16, 2004 request, status as a Small Entity has been removed.

This matter is being referred to Technology Center AU 2827 for examination in due course.

Wan Laymon
Petitions Examiner
Office of Petitions
Office of the Deputy Commissioner
for Patent Examination Policy

UNITED STATES PATENT AND TRADEMARK OFFICE

Commissioner for Patents
United States Patent and Trademark Office
P.O. Box 1450
Alexandria, VA 22313-1450
www.uspto.gov

FISH & RICHARDSON, PC
P.O. BOX 1022
MINNEAPOLIS MN 55440-1022

COPY MAILED

JUL 0 6 2007

OFFICE OF PETITIONS

In re Application of	:	
Kevin J. Orvek	:	
Application No. 10/814,883	:	ON PETITION
Filed: March 31, 2004	:	
Attorney Docket No. 10559-932001	:	

This is a decision on the petition, filed July 5, 2007, under 37 CFR 1.313(c)(3) to withdraw the above-identified application from issue after payment of the issue fee.

The petition is **GRANTED**.

The above-identified application is withdrawn from issue for express abandonment. See 37 CFR 1.313(c)(3). The above-identified application is expressly abandoned in favor of continuing application nos. 11/773,197 and 11/773,220, filed July 3, 2007.

Telephone inquiries should be directed to the undersigned at (571) 272-3208.

Karen Creasy
Petitions Examiner
Office of Petitions

UNITED STATES PATENT AND TRADEMARK OFFICE

Commissioner for Patents
United States Patent and Trademark Office
P.O. Box 1450
Alexandria, VA 22313-1450
www.uspto.gov

FISH & RICHARDSON, PC
P.O. BOX 1022
MINNEAPOLIS MN 55440-1022

MAILED

APR 24 2009

OFFICE OF PETITIONS

In re Application of	:	
Orvek et al.	:	
Application No. 10/814,883	:	DECISION ON REQUEST
Filed: March 31, 2004	:	UNDER 37 CFR 1.48(a)
Attorney Docket No. 10559-932001	:	

This is a decision on the request under 37 CFR 1.48(a), filed May 30, 2007, to correct the inventorship in the above-referenced application.

The petition is **GRANTED**.

In view of the papers filed May 30, 2007, it has been found that this nonprovisional application, as filed, through error and without deceptive intent, improperly set forth the inventorship, and accordingly, this application has been corrected in compliance with 37 CFR 1.48(a). The inventorship of this application has been changed from Kevin J. Orvek, as the sole inventor, to Kevin J. Orvek, David Y. Pui, Yi Lui, Christof Asbach and Heinz Fissan.

Any inquiries concerning this decision may be directed to the undersigned at (571) 272-6692.

Christopher Bottorff
Petitions Examiner
Office of Petitions

UNITED STATES PATENT AND TRADEMARK OFFICE

Commissioner for Patents
United States Patent and Trademark Office
P.O. Box 1450
Alexandria, VA 22313-1450
www.uspto.gov

AKIN GUMP STRAUSS HAUER & FELD, L.L.P.
ONE COMMERCE SQUARE
2005 MARKET STREET, SUITE 2200
PHILADELPHIA, PA 19103

COPY MAILED

MAY 18 2007

OFFICE OF PETITIONS

In re Application of Minoru Tanaka et. al. Application No. 10/814,889 Filed: March 31, 2004 Attorney Docket No. 9369-100US (T37-170083M/A)	: : : : : :	ON PETITION

This is a decision on the petition under 37 CFR 1.137(b), filed April 2, 2007, to revive the above-identified application.

The application became abandoned for failure to reply to the non-final Office action mailed August 7, 2006. A Notice of Abandonment was mailed March 7, 2007.

The petition satisfies the requirements of 37 CFR 1.137(b) in that petitioner has supplied (1) the reply in the form of a continuation application; (2) the petition fee of $1,500; and (3) an adequate statement of unintentional delay. Therefore, the petition is **GRANTED**.

This application is being revived solely for purposes of continuity. As continuity has been established by this decision, the application is again abandoned in favor of continuing application No. 11/620,841.

The application file is being referred to Technology Center Art Unit 3682, for further processing.

Telephone inquiries concerning this decision should be directed to the undersigned at (571) 272-3226.

Andrea Smith
Petitions Examiner
Office of Petitions

UNITED STATES PATENT AND TRADEMARK OFFICE

Commissioner for Patents
United States Patent and Trademark Office
P.O. Box 1450
Alexandria, VA 22313-1450
www.uspto.gov

MAILED
FROM DIRECTORS OFFICE

JUL 1 2 2005

TECHNOLOGY CENTER 3600

AUZVILLE JACKSON, JR.
8652 Rio Grande Road
Richmond, VA 23229

In re application of James Barry Link Application No. 10/814,893 Filed: March 31, 2004 For: RETAINING WALL BLOCK	: : : : :	**DECISION ON PETITION TO MAKE SPECIAL (ACCELERATED EXAMINATION)**

This is in response to the petition filed on June 30, 2005 to make the above-identified application special on the basis of special examining procedure for certain new applications - accelerated examination as set forth in MPEP § 708.02 VIII.

The requirements for granting special status under this section are: (A) a petition to make special accompanied by the fee set forth in 37 CFR 1.17(h); (B) all claims being directed to a single invention, or an election without traverse if the Office determines that all the claims are not directed to a single invention; (C) a statement that a pre-examination search was made listing the field of search; (D) one copy of each of the references deemed most closely related to the subject matter encompassed by the claims if said references are not already of record; and (E) a detailed discussion of how the claimed subject matter is patentable over the references in accordance with 37 CFR 1.111 (b) and (c).

The petition fails to adequately meet requirement (B) above. In this regard, item (B) is not met because the petition fails to include an election without traverse, or a statement that applicants are willing to elect without traverse should a restriction or election be required.

For the above stated reasons, the petition is **DISMISSED**.

Petitioner is given one more opportunity to perfect the petition. Any request for reconsideration must be filed within TWO MONTHS of the date of this decision. Extensions of time under 37 CFR 1.136(a) are permitted.

Applicant should promptly submit a renewed petition to the Commissioner for Patents, P.O. Box 1450, Alexandria, VA 22313-1450. The envelope should indicate that the correspondence be brought to the attention of Technology Center 3600.

Until the renewed petition is submitted, the application will be returned to the examiner's docket to await treatment on the merits in the normal order of examination.

Steven N. Meyers
Special Programs Examiner
Technology Center 3600
(571) 272-6611

SNM/pav: 07/08/05

UNITED STATES PATENT AND TRADEMARK OFFICE

Commissioner for Patents
United States Patent and Trademark Office
P.O. Box 1450
Alexandria, VA 22313-1450
www.uspto.gov

SEP 18 2005

AUZVILLE JACKSON, JR.
8652 Rio Grande Road
Richmond, VA 23229

In re application of James Barry Link Application No. 10/814,893 Filed: March 31, 2004 For: RETAINING WALL BLOCK	: : : :	**DECISION ON RENEWED PETITION TO MAKE SPECIAL (ACCELERATED EXAMINATION)**

This is in response to the renewed petition filed on August 01, 2005 to make the above-identified application special on the basis of special examining procedure for certain new applications - accelerated examination as set forth in MPEP § 708.02 VIII.

The requirements for granting special status under this section are: (A) a petition to make special accompanied by the fee set forth in 37 CFR 1.17(i); (B) all claims being directed to a single invention, or an election without traverse if the Office determines that all the claims are not directed to a single invention; (C) a statement that a pre-examination search was made listing the field of search; (D) one copy of each of the references deemed most closely related to the subject matter encompassed by the claims if said references are not already of record; and (E) a detailed discussion of how the claimed subject matter is patentable over the references in accordance with 37 CFR 1.111 (b) and (c).

The original petition filed on June 30, 2005 was dismissed on July 12, 2005 for failing to satisfy requirement (B) above. The renewed petition satisfies the above deficiencies.

Since all of the requirements for special status under MPEP § 708.02 VIII have now been met, the petition is **GRANTED**.

The examiner is directed (1) to make an interference search for possible interfering applications, (2) to promptly examine this application out of turn, and (3) if any interfering application is discovered, to examine such application simultaneously and state in the first official letter of such application that it is being taken out of turn because of a possible interference.

Petitioner is advised that this application will continue to be special, throughout its entire prosecution and pendency, including interference or appeal, if any, only if petitioner makes a prompt ***bona fide*** effort, in response to each Office action, to place the application in condition for allowance, even if it is necessary to conduct an interview with the examiner to accomplish this purpose.

SUMMARY: Petition to Make Special **GRANTED.**

Randolph A Reese

Randolph A. Reese
Special Programs Examiner
Technology Center 3600
(571) 272-6619

RAR/pav: 08/15/05

UNITED STATES PATENT AND TRADEMARK OFFICE

COMMISSIONER FOR PATENTS
UNITED STATES PATENT AND TRADEMARK OFFICE
P.O. BOX 1450
ALEXANDRIA, VA 22313-1450
www.uspto.gov

Paper No.

GOOGLE / FENWICK
SILICON VALLEY CENTER
801 CALIFORNIA ST.
MOUNTAIN VIEW CA 94041

COPY MAILED

DEC 18 2007

OFFICE OF PETITIONS

In re Application of :
Lawrence et al. : DECISION ON PETITION
Application No. 10/814,908 :
Filed: March 31, 2004 :
Attorney Docket No.24207-10079:

This is a decision on the "PETITION FOR REVIVAL OF AN APPLICATION FOR PATENT ABANDONED FOR FAILURE TO NOTIFY THE OFFICE OF A FOREIGN OR INTERNATIONAL FILING (37 CFR 1.137(f)) filed July 30, 2007.

The petition is **GRANTED**.

Petitioner states that the instant nonprovisional application is the subject of a foreign or international application filed on March 30, 2005. However, the US Patent and Trademark Office was unintentionally not notified of this filing within 45 days subsequent to the filing of the foreign or international application.

In view of the above, this application became abandoned pursuant to 35 U.S.C. 122(b)(2)(B)(iii) and 37 CFR 1.213(c) for failure to timely notify the Office of the filing of an application in a foreign country, or under a multilateral international agreement, that requires publication of applications 18 months after filing.

A petition under 37 CFR 1.137(f) must be accompanied by:

(1) the reply, which is met by the notification of such filing in a foreign country or under a multinational treaty;

(2) the petition fee as set forth in 37 CFR 1.17(m); and

(3) a statement that the entire delay in filing the required reply from the due date of the reply until the filing of a grantable petition was unintentional.

The instant petition has been found to be in compliance with 37 CFR 1.137(f). Accordingly, the failure to timely notify the Office of a foreign or international filing within 45 days after the date of filing of such foreign or international application as provided by 35 U.S.C. 122(b)(2)(B)(iii) and 37 CFR 1.213(c) is accepted as having been unintentionally delayed.

The previous Request and Certification under 35 U.S.C. 122(b)(2)(B)(i) has been rescinded. A Notice Regarding Rescission of Nonpublication Request indicating a projected publication date of March 27, 2008 accompanies this decision on petition.

Technology Center AU 2164 will take further action in this application in due course.

Telephone inquiries regarding this decision should be directed to the undersigned at (571) 272-3219.

Nancy Johnson
Petitions Attorney
Office of Petitions

Attachment: Communication Regarding Rescission of Nonpublication Request and/or Notice of Foreign Filing

APPLICATION NUMBER	FILING/RECEIPT DATE	FIRST NAMED APPLICANT	ATTY. DOCKET NO.
10/814,908	03/31/2004	Stephen R. Lawrence	24207-10079

CONFIRMATION NO. 6319

OC000000027342885

62296
GOOGLE / FENWICK
SILICON VALLEY CENTER
801 CALIFORNIA ST.
MOUNTAIN VIEW, CA 94041

Communication Regarding Rescission Of Nonpublication Request and/or Notice of Foreign Filing

Applicant's rescission of the previously-filed nonpublication request and/or notice of foreign filing is acknowledged. The paper has been reflected in the Patent and Trademark Office's (USPTO's) computer records so that the earliest possible projected publication date can be assigned.

The projected publication date is 03/27/2008.

If applicant rescinded the nonpublication request before or on the date of "foreign filing,"[1] then no notice of foreign filing is required.

If applicant foreign filed the application after filing the above application and before filing the rescission, and the rescission did not also include a notice of foreign filing, then a notice of foreign filing (not merely a rescission) is required to be filed within 45 days of the date of foreign filing. See 35 U.S.C. § 122(b)(2)(B)(iii), and Clarification of the United States Patent and Trademark Office's Interpretation of the Provisions of 35 U.S.C. § 122(b)(2)(B)(ii)-(iv), 1272 Off. Gaz. Pat. Office 22 (July 1, 2003).

If a notice of foreign filing is required and is not filed within 45 days of the date of foreign filing, then the application becomes abandoned pursuant to 35 U.S.C. § 122(b)(2)(B)(iii). In this situation, applicant should either file a petition to revive or notify the Office that the application is abandoned. See 37 CFR 1.137(f). Any such petition to revive will be forwarded to the Office of Petitions for a decision. Note that the filing of the petition will not operate to stay any period of reply that may be running against the application.

Questions regarding petitions to revive should be directed to the Office of Petitions at (571) 272-3282. Questions regarding publications of patent applications should be directed to the patent application publication hotline at (703) 605-4283 or by e-mail pgpub@uspto.gov.

[1] Note, for purpose of this notice, that "foreign filing" means "filing an application directed to the same invention in another country, or under a multilateral international agreement, that requires publication of applications 18 months after filing".

UNITED STATES PATENT AND TRADEMARK OFFICE

UNITED STATES DEPARTMENT OF COMMERCE
United States Patent and Trademark Office
Address: COMMISSIONER FOR PATENTS
P.O. Box 1450
Alexandria, Virginia 22313-1450
www.uspto.gov

GOOGLE / FENWICK
SILICON VALLEY CENTER
801 CALIFORNIA ST.
MOUNTAIN VIEW, CA 94041

Mail Date: 04/21/2010

Applicant	: Stephen R. Lawrence	: DECISION ON REQUEST FOR
Patent Number	: 7664734	: RECALCULATION of PATENT
Issue Date	: 02/16/2010	: TERM ADJUSTMENT IN VIEW
Appliction No	: 10/814,908	: OF WYETH AND NOTICE OF INTENT TO
Filed	: 03/31/2004	: ISSUE CERTIFICATE OF CORRECTION
		:

The Request for Recalculation is **GRANTED** to the extent indicated.

The patent term adjustment has been determined to be **1374** days. The USPTO will *sua sponte* issue a certificate of correction reflecting the amount of PTA days determined by the recalculation.

Prior to the issuance of the certificate of correction, the USPTO will afford patentee an opportunity to be heard and request reconsideration. Accordingly, patentee has **one month or thirty (30) days**, whichever is longer, to file a request for reconsideration of this patent term adjustment calculation. See 35 U.S.C. 154(b)(3)(B)(ii) and 37 CFR 1.322(a)(4). No extensions of time will be granted under 37 CFR 1.136.

Patentee should use document code PET.OP if electronically filing a request for reconsideration of this patent term adjustment calculation. The patentee must also include the information required by 37 CFR 1.705(b)(2) and the fee required by 37 CFR 1.18(e). If patentee does not file a timely request for reconsideration of this patent term adjustment calculation including the information required by 37 CFR 1.705(b)(2) and the fee required by 37 CFR 1.18(e), the USPTO will issue a certificate of correction reflecting the PTA determination noted above.

Patentee should be aware that in order to preserve the right to review in the United States District Court for the District of Columbia of the USPTO patent term adjustment determination, patentee must ensure that he or she also take the steps required under 35 U.S.C. 154(b)(4)(A) in a timely manner. Nothing in the request for recalculation should be construed as providing an alternative time frame for commencing a civil action under 35 U.S.C. 154(b)(4)(A).

Any questions concerning this decision should be directed to the Office of Patent Legal Administration at 571-272-7702.

UNITED STATES PATENT AND TRADEMARK OFFICE

UNITED STATES DEPARTMENT OF COMMERCE
United States Patent and Trademark Office
Address: COMMISSIONER FOR PATENTS
P.O. Box 1450
Alexandria, Virginia 22313-1450
www.uspto.gov

SAP/BSTZ
BLAKELY SOKOLOFF TAYLOR & ZAFMAN LLP
1279 OAKMEAD PARKWAY
SUNNYVALE, CA 94085-4040

Mail Date: 08/04/2010

Applicant	: Miroslav R. Petrov	: DECISION ON REQUEST FOR
Patent Number	: 7661066	: RECALCULATION of PATENT
Issue Date	: 02/09/2010	: TERM ADJUSTMENT IN VIEW
Application No	: 10/814,915	: OF WYETH AND NOTICE OF INTENT TO
Filed	: 03/26/2004	: ISSUE CERTIFICATE OF CORRECTION
		:

The Request for Recalculation is **GRANTED** to the extent indicated.

The patent term adjustment has been determined to be **714** days. The USPTO will *sua sponte* issue a certificate of correction reflecting the amount of PTA days determined by the recalculation.

Prior to the issuance of the certificate of correction, the USPTO will afford patentee an opportunity to be heard and request reconsideration. Accordingly, patentee has **one month or thirty (30) days**, whichever is longer, to file a request for reconsideration of this patent term adjustment calculation. See 35 U.S.C. 154(b)(3)(B)(ii) and 37 CFR 1.322(a)(4). No extensions of time will be granted under 37 CFR 1.136.

Patentee should use document code PET.OP if electronically filing a request for reconsideration of this patent term adjustment calculation. The patentee must also include the information required by 37 CFR 1.705(b)(2) and the fee required by 37 CFR 1.18(e). If patentee does not file a timely request for reconsideration of this patent term adjustment calculation including the information required by 37 CFR 1.705(b)(2) and the fee required by 37 CFR 1.18(e), the USPTO will issue a certificate of correction reflecting the PTA determination noted above.

Patentee should be aware that in order to preserve the right to review in the United States District Court for the District of Columbia of the USPTO patent term adjustment determination, patentee must ensure that he or she also take the steps required under 35 U.S.C. 154(b)(4)(A) in a timely manner. Nothing in the request for recalculation should be construed as providing an alternative time frame for commencing a civil action under 35 U.S.C. 154(b)(4)(A).

Any questions concerning this decision should be directed to the Office of Patent Legal Administration at 571-272-7702.

UNITED STATES PATENT AND TRADEMARK OFFICE

Commissioner for Patents
United States Patent and Trademark Office
P.O. Box 1450
Alexandria, VA 22313-1450
www.uspto.gov

In re Patent No. 7000964
Issue Date: February 21,2006
Application No. 10814920
Filed: March 31,2004
Attorney Docket No. 1645(AMF)

:
:DECISION GRANTING PETITION
:UNDER 37 CFR 1.378(c)
:

This is a decision on the electronic petition, filed April 27,2010 ,under 37 CFR 1.378(c) to accept the unintentionally delayed payment of the 3.5 year maintenance fee for the above-identified patent.

The petition is **GRANTED**.

The maintenance fee is accepted, and the above-identified patent reinstated as of April 27,2010 .
This decision also constitutes notice that the fee has been accepted. An electronic copy of the petition and this decision has been created as an entry in the Image File Wrapper. Nevertheless, petitioner should print and retain an independent copy.

Telephone inquiries related to this electronic decision should be directed to the Electronic Business Center at 1-866-217-9197.

PTO/SB/66 (03-09)
Approved for use through 03/31/2012. OMB 0651-0016
U.S. Patent and Trademark Office: U.S. DEPARTMENT OF COMMERCE
Under the Paperwork Reduction Act of 1995, no persons are required to respond to a collection of information unless it displays valid OMB control number.

PETITION TO ACCEPT UNINTENTIONALLY DELAYED PAYMENT OF MAINTENANCE FEE IN AN EXPIRED PATENT (37 CFR 1.378(c))

Patent Number	Issue Date (YYYY-MM-DD)	Application Number	Filing Date (YYYY-MM-DD)	Docket Number (if applicable)
7000964	2006-02-21	10814920	2004-03-31	

CAUTION: Maintenance fee (and surcharge, if any) payment must correctly identify: (1) the patent number and (2) the application number of the actual U.S. application leading to issuance of that patent to ensure the fee(s) is/are associated with the correct patent. 37 CFR 1.366(c) and (d).

SMALL ENTITY
☒ Patentee claims, or has previously claimed, small entity status. See 37 CFR 1.27.

LOSS OF ENTITLEMENT TO SMALL ENTITY STATUS
☐ Patentee is no longer entitled to small entity status. See 37 CFR 1.27(g)

NOT Small Entity		Small Entity	
Fee	Code	Fee	Code
○ 3 ½ year	(1551)	◉ 3 ½ year	(2551)
○ 7 ½ year	(1552)	○ 7 ½ year	(2552)
○ 11 ½ year	(1553)	○ 11 ½ year	(2553)

SURCHARGE
The surcharge required by 37 CFR 1.20(i)(2) (Fee Code 1558) must be paid as a condition of accepting unintentionally delayed payment of the maintenance fee.

MAINTENANCE FEE (37 CFR 1.20(e)-(g))
The appropriate maintenance fee must be submitted with this petition.

STATEMENT
THE UNDERSIGNED CERTIFIES THAT THE DELAY IN PAYMENT OF THE MAINTENANCE FEE TO THIS PATENT WAS UNINTENTIONAL

PETITIONER(S) REQUEST THAT THE DELAYED PAYMENT OF THE MAINTENANCE FEE BE ACCEPTED AND THE PATENT REINSTATED

THIS PORTION MUST BE COMPLETED BY THE SIGNATORY OR SIGNATORIES

37 CFR 1.378(d) states: "Any petition under this section must be signed by an attorney or agent registered to practice before the Patent and Trademark Office, or by the patentee, the assignee, or other party in interest."

I certify, in accordance with 37 CFR 1.4(d)(4) that I am

◉ An attorney or agent registered to practice before the Patent and Trademark Office

○ A sole patentee

○ A joint patentee; I certify that I am authorized to sign this submission on behalf of all the other patentees.

○ A joint patentee; all of whom are signing this e-petition

○ The assignee of record of the entire interest

Patent Practitioner			
A signature of the applicant or representative is required in accordance with 37 CFR 1.33 and 10.18. Please see 37 CFR 1.4(d) for the form of the signature			
Signature	/George M. Thomas/	Date (YYYY-MM-DD)	2010-04-27
Name	George M. Thomas	Registration Number	22260

This collection of information is required by 37 CFR 1.378(c). The information is required to obtain or retain a benefit by the public which is to file (and by the USPTO to process) an application. Confidentiality is governed by 35 U.S.C. 122 and 37 CFR 1.11 and 1.14. This collection is estimated to take 1 hour to complete, including gathering, preparing, and submitting the completed application form to the USPTO. Time will vary depending upon the individual case. Any comments on the amount of time you require to complete this form and/or suggestions for reducing this burden, should be sent to the Chief Information Officer, U.S. Patent and Trademark Office, U.S. Department of Commerce, P.O. Box 1450, Alexandria, VA 22313-1450. DO NOT SEND FEES OR COMPLETED FORMS TO THIS ADDRESS. **This form can only be used when in conjunction with EFS-Web. If this form is mailed to the USPTO, it may cause delays in reinstating the patent.**

Privacy Act Statement

The Privacy Act of 1974 (P.L. 93-579) requires that you be given certain information in connection with your submission of the attached form related to a patent application or patent. Accordingly, pursuant to the requirements of the Act, please be advised that: (1) the general authority for the collection of this information is 35 U.S.C. 2(b)(2); (2) furnishing of the information solicited is voluntary; and (3) the principal purpose for which the information is used by the U.S. Patent and Trademark Office is to process and/or examine your submission related to a patent application or patent. If you do not furnish the requested information, the U.S. Patent and Trademark Office may not be able to process and/or examine your submission, which may result in termination of proceedings or abandonment of the application or expiration of the patent.

The information provided by you in this form will be subject to the following routine uses:

1. The information on this form will be treated confidentially to the extent allowed under the Freedom of Information Act (5 U.S.C. 552) and the Privacy Act (5 U.S.C. 552a). Records from this system of records may be disclosed to the Department of Justice to determine whether the Freedom of Information Act requires disclosure of these records.

2. A record from this system of records may be disclosed, as a routine use, in the course of presenting evidence to a court, magistrate, or administrative tribunal, including disclosures to opposing counsel in the course of settlement negotiations.

3. A record in this system of records may be disclosed, as a routine use, to a Member of Congress submitting a request involving an individual, to whom the record pertains, when the individual has requested assistance from the Member with respect to the subject matter of the record.

4. A record in this system of records may be disclosed, as a routine use, to a contractor of the Agency having need for the information in order to perform a contract. Recipients of information shall be required to comply with the requirements of the Privacy Act of 1974, as amended, pursuant to 5 U.S.C. 552a(m).

5. A record related to an International Application filed under the Patent Cooperation Treaty in this system of records may be disclosed, as a routine use, to the International Bureau of the World Intellectual Property Organization, pursuant to the Patent Cooperation Treaty.

6. A record in this system of records may be disclosed, as a routine use, to another federal agency for purposes of National Security review (35 U.S.C. 181) and for review pursuant to the Atomic Energy Act (42 U.S.C. 218(c)).

7. A record from this system of records may be disclosed, as a routine use, to the Administrator, General Services, or his/her designee, during an inspection of records conducted by GSA as part of that agency's responsibility to recommend improvements in records management practices and programs, under authority of 44 U.S.C. 2904 and 2906. Such disclosure shall be made in accordance with the GSA regulations governing inspection of records for this purpose, and any other relevant (i.e., GSA or Commerce) directive. Such disclosure shall not be used to make determinations about individuals.

8. A record from this system of records may be disclosed, as a routine use, to the public after either publication of the application pursuant to 35 U.S.C. 122(b) or issuance of a patent pursuant to 35 U.S.C. 151. Further, a record may be disclosed, subject to the limitations of 37 CFR 1.14, as a routine use, to the public if the record was filed in an application which became abandoned or in which the proceedings were terminated and which application is referenced by either a published application, an application open to public inspections or an issued patent.

9. A record from this system of records may be disclosed, as a routine use, to a Federal, State, or local law enforcement agency, if the USPTO becomes aware of a violation or potential violation of law or regulation.

UNITED STATES PATENT AND TRADEMARK OFFICE

Commissioner for Patents
United States Patent and Trademark Office
P.O. Box 1450
Alexandria, VA 22313-1450
www.uspto.gov

John C. Alemanni
Patent Department-53051
KILPATRICK STOCKTON LLP
1001 West Fourth Street
Winston-Salem, NC 27101

MAILED

JUN 2 5 2005

Technology Center 2100

In re Application of:
David Auerbach et al.
Application No. 10/814,924
Filed: March 31, 2004
For: SYSTEMS AND METHODS FOR PROVIDING SEARCH RESULTS

DECISION ON REQUEST TO WITHDRAW AS ATTORNEY OR AGENT

This is a decision on the Request To Withdraw from Representation filed March 10, 2005.

A grantable request to withdraw as attorney of record should indicate thereon the present mailing addresses of the attorney(s) who is/are withdrawing from the record and of the applicant. The request for withdrawal must be signed by every attorney seeking to withdraw or contain a clear indication that one attorney is signing on behalf of another/others. A request to withdraw will not be approved unless at least 30 (thirty) days would remain between the date of approval and the later of the expiration date of a time to file a response or the expiration date of the maximum time period which can be extended under 37 C.F.R. § 1. 136(a). The effective date of withdrawal being the date of decision and not the date of request. See M.P.E.P. § 402.06. 37 C.F.R. § 1.36 further requires that the applicant or patent owner be notified of the withdrawal of the attorney or agent.

The request is **GRANTED**.

All future communications from the Office will be directed to the below-listed address until otherwise notified by applicant. This correspondence address is provided by the withdrawn attorney(s). Applicant is reminded of the obligation to promptly notify the Patent and Trademark Office (Office) of any change in correspondence address to ensure receipt of all communications from the Office.

Michelle R Eason

Vincent N. Trans
Special Program Examiner
Technology Center 2100
(571) 272-3616

cc: Sabra-Anne R. Truesdale
FENWICK & WEST LLP
Silicon Valley Center
801 California Street
Mountain View, CA 94041

UNITED STATES PATENT AND TRADEMARK OFFICE

Commissioner for Patents
United States Patent and Trademark Office
P.O. Box 1450
Alexandria, VA 22313-1450
www.uspto.gov

GOOGLE / FENWICK
SILICON VALLEY CENTER
801 CALIFORNIA ST.
MOUNTAIN VIEW, CA 94041

COPY MAILED

NOV 27 2007

OFFICE OF PETITIONS

In re Application of
David B. Auerbach, et al.
Application No. 10/814,924
Filed: March 31, 2004
Attorney Docket No. 24207-10118

DECISION GRANTING PETITION
UNDER 37 CFR 1.137(b)

This is a decision on the petition, filed July 30, 2007, which is being treated as a petition under 37 CFR 1.137(b) to revive the instant nonprovisional application for failure to timely notify the U.S. Patent and Trademark (USPTO) of the filing of an application in a foreign country, or under a multinational treaty that requires publication of applications eighteen months after filing. *See* 37 CFR 1.137(f).

The petition is **GRANTED**.

Petitioner indicates that the instant nonprovisional application is the subject of an application filed in an eighteen month publication country on March 30, 2005. However, the USPTO was unintentionally not notified of this filing within 45 days subsequent to the filing of the subject application in an eighteen month publication country.

In view of the above, this application became abandoned pursuant to 35 U.S.C. §122(b)(2)(B)(iii) and 37 CFR 1.213(c) for failure to timely notify the Office of the filing of an application in a foreign country or under a multilateral international agreement that requires publication of applications 18 months after filing.

A petition to revive an application abandoned pursuant to 35 U.S.C. § 122(b)(2)(B)(iii) for failure to notify the USPTO of a foreign filing must be accompanied by:

(1) the required reply which is met by the notification of such filing in a foreign country or under a multinational treaty;
(2) the petition fee as set forth in 37 CFR 1.17(m); and
(3) a statement that the entire delay in filing the required reply from the due date of the reply until the filing of a grantable petition was unintentional.

The petition has been found to be in compliance with 37 CFR 1.137(b). Accordingly, the failure to timely notify the USPTO of a foreign or international filing within 45 days after the date of filing of such foreign or international application as provided by 35 U.S.C. § 122(b)(2)(B)(iii) and 37 CFR 1.213(c) is accepted as having been unintentionally delayed.

The previous Request and Certification under 35 U.S.C. § 122(b)(2)(B)(i) has been rescinded. A Notice Regarding Rescission of Nonpublication Request which sets forth the projected publication date of March 6, 2008 accompanies this decision on petition.

Any inquiries concerning this decision may be directed to the undersigned at (571) 272-3204.

This application is being referred to the Technology Center 2154.

Sherry D. Brinkley
Petitions Examiner
Office of Petitions

ATTACHMENT: Notice Regarding Rescission of Nonpublication Request

UNITED STATES PATENT AND TRADEMARK OFFICE

UNITED STATES DEPARTMENT OF COMMERCE
United States Patent and Trademark Office
Address: COMMISSIONER FOR PATENTS
P.O. Box 1450
Alexandria, Virginia 22313-1450
www.uspto.gov

APPLICATION NUMBER	FILING OR 371(C) DATE	FIRST NAMED APPLICANT	ATTY. DOCKET NO./TITLE
10/814,924	03/31/2004	David Benjamin Auerbach	24207-10118

CONFIRMATION NO. 6346

62296
GOOGLE / FENWICK
SILICON VALLEY CENTER
801 CALIFORNIA ST.
MOUNTAIN VIEW, CA 94041

NONPUBLICATION RESCISSION LETTER

OC000000026916351

Date Mailed: 11/27/2007

Communication Regarding Rescission Of Nonpublication Request and/or Notice of Foreign Filing

Applicant's rescission of the previously-filed nonpublication request and/or notice of foreign filing is acknowledged. The paper has been reflected in the Patent and Trademark Office's (USPTO's) computer records so that the earliest possible projected publication date can be assigned.

The projected publication date is 03/06/2008.

If applicant rescinded the nonpublication request before or on the date of "foreign filing,"[1] then no notice of foreign filing is required.

If applicant foreign filed the application after filing the above application and before filing the rescission, and the rescission did not also include a notice of foreign filing, then a notice of foreign filing (not merely a rescission) is required to be filed within 45 days of the date of foreign filing. See 35 U.S.C. § 122(b)(2)(B)(iii), and Clarification of the United States Patent and Trademark Office's Interpretation of the Provisions of 35 U.S.C. § 122(b)(2)(B)(ii)-(iv), 1272 Off. Gaz. Pat. Office 22 (July 1, 2003).

If a notice of foreign filing is required and is not filed within 45 days of the date of foreign filing, then the application becomes abandoned pursuant to 35 U.S.C. § 122(b)(2)(B)(iii). In this situation, applicant should either file a petition to revive or notify the Office that the application is abandoned. See 37 CFR 1.137(f). Any such petition to revive will be forwarded to the Office of Petitions for a decision. Note that the filing of the petition will not operate to stay any period of reply that may be running against the application.

Questions regarding petitions to revive should be directed to the Office of Petitions at (571) 272-3282. Questions regarding publications of patent applications should be directed to the patent application publication hotline at (703) 605-4283 or by e-mail pgpub@uspto.gov.

[1] Note, for purpose of this notice, that "foreign filing" means "filing an application directed to the same invention in another country, or under a multilateral international agreement, that requires publication of applications 18 months after filing".

UNITED STATES PATENT AND TRADEMARK OFFICE

UNITED STATES DEPARTMENT OF COMMERCE
United States Patent and Trademark Office
Address: COMMISSIONER FOR PATENTS
P.O. Box 1450
Alexandria, Virginia 22313-1450
www.uspto.gov

HOFFMAN WARNICK LLC
75 STATE ST
14TH FLOOR
ALBANY, NY 12207

Mail Date: 04/20/2010

Applicant	: Youssef Drissi	: DECISION ON REQUEST FOR
Patent Number	: 7647579	: RECALCULATION of PATENT
Issue Date	: 01/12/2010	: TERM ADJUSTMENT IN VIEW
Appliction No	: 10/814,925	: OF WYETH AND NOTICE OF INTENT TO
Filed	: 03/31/2004	: ISSUE CERTIFICATE OF CORRECTION
		:

The Request for Recalculation is **GRANTED** to the extent indicated.

The patent term adjustment has been determined to be **1276** days. The USPTO will *sua sponte* issue a certificate of correction reflecting the amount of PTA days determined by the recalculation.

Prior to the issuance of the certificate of correction, the USPTO will afford patentee an opportunity to be heard and request reconsideration. Accordingly, patentee has **one month or thirty (30) days**, whichever is longer, to file a request for reconsideration of this patent term adjustment calculation. See 35 U.S.C. 154(b)(3)(B)(ii) and 37 CFR 1.322(a)(4). No extensions of time will be granted under 37 CFR 1.136.

Patentee should use document code PET.OP if electronically filing a request for reconsideration of this patent term adjustment calculation. The patentee must also include the information required by 37 CFR 1.705(b)(2) and the fee required by 37 CFR 1.18(e). If patentee does not file a timely request for reconsideration of this patent term adjustment calculation including the information required by 37 CFR 1.705(b)(2) and the fee required by 37 CFR 1.18(e), the USPTO will issue a certificate of correction reflecting the PTA determination noted above.

Patentee should be aware that in order to preserve the right to review in the United States District Court for the District of Columbia of the USPTO patent term adjustment determination, patentee must ensure that he or she also take the steps required under 35 U.S.C. 154(b)(4)(A) in a timely manner. Nothing in the request for recalculation should be construed as providing an alternative time frame for commencing a civil action under 35 U.S.C. 154(b)(4)(A).

Any questions concerning this decision should be directed to the Office of Patent Legal Administration at 571-272-7702.