UNITED STATES PATENT AND TRADEMARK OFFICE

Commissioner for Patents
United States Patent and Trademark Office
P.O. Box 1450
Alexandria, VA 22313-1450
www.uspto.gov

QUALCOMM INCORPORATED
5775 MOREHOUSE DR.
SAN DIEGO CA 92121

COPY MAILED

NOV 2 0 2007

OFFICE OF PETITIONS

In re Application of :
Kang et al. :
Application No. 10/814,935 :
Filed: March 30, 2004 :
Attorney Docket No. 030310 :

ON PETITION

This is a decision on the petition under 37 C.F.R. § 1.137(b), filed October 26, 2007, to revive the above-identified application.

The petition is **GRANTED.**

The petition satisfies the conditions for revival pursuant to the provisions of 37 CFR 1.137(b) in that (1) the reply in the form of an Election; (2) the petition fee; and (3) the required statement of unintentional delay have been received. Accordingly, the response has been accepted as having been unintentionally delayed.

An extension of time under 37 CFR 1.136 must be filed prior to the expiration of the maximum extendable period for reply. See In re Application of S., 8 USPQ2d 1630, 1631 (Comm'r Pats. 1988). Accordingly, since the $1050.00 extension of time fee submitted with the petition on October 26, 2007 was subsequent to the maximum extendable period for reply, this fee is unnecessary and will be credited to petitioner's deposit account as authorized.

This matter is being referred to Technology Center 2800 for further examination on the merits.

Telephone inquiries regarding this decision should be directed to the undersigned at (571) 272-3206.

Liana Walsh
Petitions Examiner
Office of Petitions

UNITED STATES PATENT AND TRADEMARK OFFICE

Commissioner for Patents
United States Patent and Trademark Office
P.O. Box 1450
Alexandria, VA 22313-1450
www.uspto.gov

QUALCOMM INCORPORATED
5775 MOREHOUSE DR.
SAN DIEGO CA 92121

COPY MAILED

APR 21 2008

OFFICE OF PETITIONS

In re Application of	:
Kang et al.	:
Application No. 10/814,935	: DECISION GRANTING PETITION
Filed: March 30, 2004	: UNDER 37 CFR 1.78(a)(6)
Attorney Docket No. 030310	:

This is a decision on the petition under 37 CFR 1.78(a)(6), filed March 18, 2008, to accept an unintentionally delayed claim under 35 U.S.C. § 119(e) for the benefit of prior-filed provisional Application No. 60/462,667, filed April 11, 2003.

The petition is **GRANTED**.

A petition under 37 CFR 1.78(a)(6) is only applicable to those applications filed on or after November 29, 2000. Further, the petition is appropriate only after expiration of the period specified in 37 CFR 1.78(a)(5)(ii) and must be filed during the pendency of the nonprovisional application. In addition, the petition must be accompanied by:

(1) the reference required by 35 U.S.C. § 119(e) and 37 CFR 1.78(a)(5)(i) to the prior-filed application, unless previously submitted;
(2) the surcharge set forth in § 1.17(t); and
(3) a statement that the entire delay between the date the claim was due under 37 CFR 1.78(a)(5)(ii) and the date the claim was filed was unintentional. The Commissioner may require additional information where there is a question whether the delay was unintentional.

The instant nonprovisional application was filed after November 29, 2000, and the claim herein for the benefit of priority to the prior-filed provisional application is submitted after expiration of the period specified by 37 CFR 1.78(a)(5)(ii). Therefore, this is a proper petition under 37 CFR 1.78(a)(6).

The petition complies with the requirements for a grantable petition under 37 CFR 1.78(a)(6) in that (1) a reference to the above-noted, prior-filed provisional application has been included in an amendment to the first sentence of the specification following the title, as provided by 37 CFR 1.78(a)(5)(iii); (2) the surcharge fee required by 37 CFR 1.17(t) has been submitted; and (3) the petition contains a proper statement of unintentional delay. Accordingly, having found that the instant petition for acceptance of an unintentionally delayed claim for the benefit of priority under 35 U.S.C. § 119(e) to the above-noted, prior-filed provisional application satisfies the conditions of 37 CFR 1.78(a)(6), the petition is granted.

The granting of the petition to accept the delayed benefit claim to the prior-filed application under 37 CFR 1.78(a)(6) should not be construed as meaning that the instant application is entitled to the benefit of the filing date of the prior-filed application. In order for the instant application to be entitled to the benefit of the prior-filed application, all other requirements under 35 U.S.C. §119(e) and 37 CFR 1.78(a)(4) and (a)(5) must be met. Similarly, the fact that the corrected Filing Receipt accompanying this decision on petition includes the prior-filed application should not be construed as meaning that applicant is entitled to the claim for benefit of priority to the prior-filed application noted thereon. Accordingly, the examiner will, in due course, consider this benefit claim and determine whether the instant application is entitled to the benefit of the earlier filing date.

A corrected Filing Receipt, which includes the priority claim to the prior-filed provisional application, accompanies this decision on petition.

Any inquiries concerning this decision may be directed to the undersigned at (571) 272-3206. Any other inquiries concerning either the examination procedures or status of the application should be directed to the Technology Center.

This matter is being referred to Technology Center AU 2838 for appropriate action on the amendment submitted March 18, 2008, including consideration by the examiner of the claim under 35 U.S.C. §119(e) for the benefit of priority to prior-filed provisional Application No. 60/462,667.

Liana Walsh
Petitions Examiner
Office of Petitions

ATTACHMENT: Corrected Filing Receipt

UNITED STATES PATENT AND TRADEMARK OFFICE

UNITED STATES DEPARTMENT OF COMMERCE
United States Patent and Trademark Office
Address: COMMISSIONER FOR PATENTS
P.O. Box 1450
Alexandria, Virginia 22313-1450
www.uspto.gov

APPLICATION NUMBER	FILING or 371(c) DATE	GRP ART UNIT	FIL FEE REC'D	ATTY.DOCKET.NO	TOT CLAIMS	IND CLAIMS
10/814,935	03/30/2004	2838	1654	030310	50	7

CONFIRMATION NO. 7935

CORRECTED FILING RECEIPT

23696
QUALCOMM INCORPORATED
5775 MOREHOUSE DR.
SAN DIEGO, CA 92121

OC000000029451988

Date Mailed: 04/18/2008

Receipt is acknowledged of this non-provisional patent application. The application will be taken up for examination in due course. Applicant will be notified as to the results of the examination. Any correspondence concerning the application must include the following identification information: the U.S. APPLICATION NUMBER, FILING DATE, NAME OF APPLICANT, and TITLE OF INVENTION. Fees transmitted by check or draft are subject to collection. Please verify the accuracy of the data presented on this receipt. **If an error is noted on this Filing Receipt, please write to the Office of Initial Patent Examination's Filing Receipt Corrections. Please provide a copy of this Filing Receipt with the changes noted thereon. If you received a "Notice to File Missing Parts" for this application, please submit any corrections to this Filing Receipt with your reply to the Notice. When the USPTO processes the reply to the Notice, the USPTO will generate another Filing Receipt incorporating the requested corrections**

Applicant(s)

Inyup Kang, San Diego, CA;
Karthikeyan Ethirajan, San Diego, CA;
Matthew Levi Severson, Oceanside, CA;
Mohamed Elgebaly, San Diego, CA;
Manoj Sachdev, Waterloo, CANADA;
Amr Fahim, Newport Beach, CA;

Power of Attorney: The patent practitioners associated with Customer Number 23696

Domestic Priority data as claimed by applicant

This appln claims benefit of 60/462,667 04/11/2003

Foreign Applications

If Required, Foreign Filing License Granted: 06/10/2004

The country code and number of your priority application, to be used for filing abroad under the Paris Convention, is **US 10/814,935**

Projected Publication Date: Not Applicable

Non-Publication Request: No

Early Publication Request: No

Title

DYNAMIC VOLTAGE SCALING FOR PORTABLE DEVICES

Preliminary Class

365

PROTECTING YOUR INVENTION OUTSIDE THE UNITED STATES

Since the rights granted by a U.S. patent extend only throughout the territory of the United States and have no effect in a foreign country, an inventor who wishes patent protection in another country must apply for a patent in a specific country or in regional patent offices. Applicants may wish to consider the filing of an international application under the Patent Cooperation Treaty (PCT). An international (PCT) application generally has the same effect as a regular national patent application in each PCT-member country. The PCT process **simplifies** the filing of patent applications on the same invention in member countries, but **does not result** in a grant of "an international patent" and does not eliminate the need of applicants to file additional documents and fees in countries where patent protection is desired.

Almost every country has its own patent law, and a person desiring a patent in a particular country must make an application for patent in that country in accordance with its particular laws. Since the laws of many countries differ in various respects from the patent law of the United States, applicants are advised to seek guidance from specific foreign countries to ensure that patent rights are not lost prematurely.

Applicants also are advised that in the case of inventions made in the United States, the Director of the USPTO must issue a license before applicants can apply for a patent in a foreign country. The filing of a U.S. patent application serves as a request for a foreign filing license. The application's filing receipt contains further information and guidance as to the status of applicant's license for foreign filing.

Applicants may wish to consult the USPTO booklet, "General Information Concerning Patents" (specifically, the section entitled "Treaties and Foreign Patents") for more information on timeframes and deadlines for filing foreign patent applications. The guide is available either by contacting the USPTO Contact Center at 800-786-9199, or it can be viewed on the USPTO website at http://www.uspto.gov/web/offices/pac/doc/general/index.html.

For information on preventing theft of your intellectual property (patents, trademarks and copyrights), you may wish to consult the U.S. Government website, http://www.stopfakes.gov. Part of a Department of Commerce initiative, this website includes self-help "toolkits" giving innovators guidance on how to protect intellectual property in specific countries such as China, Korea and Mexico. For questions regarding patent enforcement issues, applicants may call the U.S. Government hotline at 1-866-999-HALT (1-866-999-4158).

LICENSE FOR FOREIGN FILING UNDER

Title 35, United States Code, Section 184

Title 37, Code of Federal Regulations, 5.11 & 5.15

GRANTED

The applicant has been granted a license under 35 U.S.C. 184, if the phrase "IF REQUIRED, FOREIGN FILING LICENSE GRANTED" followed by a date appears on this form. Such licenses are issued in all applications where the conditions for issuance of a license have been met, regardless of whether or not a license may be required as

set forth in 37 CFR 5.15. The scope and limitations of this license are set forth in 37 CFR 5.15(a) unless an earlier license has been issued under 37 CFR 5.15(b). The license is subject to revocation upon written notification. The date indicated is the effective date of the license, unless an earlier license of similar scope has been granted under 37 CFR 5.13 or 5.14.

This license is to be retained by the licensee and may be used at any time on or after the effective date thereof unless it is revoked. This license is automatically transferred to any related applications(s) filed under 37 CFR 1.53(d). This license is not retroactive.

The grant of a license does not in any way lessen the responsibility of a licensee for the security of the subject matter as imposed by any Government contract or the provisions of existing laws relating to espionage and the national security or the export of technical data. Licensees should apprise themselves of current regulations especially with respect to certain countries, of other agencies, particularly the Office of Defense Trade Controls, Department of State (with respect to Arms, Munitions and Implements of War (22 CFR 121-128)); the Bureau of Industry and Security, Department of Commerce (15 CFR parts 730-774); the Office of Foreign AssetsControl, Department of Treasury (31 CFR Parts 500+) and the Department of Energy.

NOT GRANTED

No license under 35 U.S.C. 184 has been granted at this time, if the phrase "IF REQUIRED, FOREIGN FILING LICENSE GRANTED" DOES NOT appear on this form. Applicant may still petition for a license under 37 CFR 5.12, if a license is desired before the expiration of 6 months from the filing date of the application. If 6 months has lapsed from the filing date of this application and the licensee has not received any indication of a secrecy order under 35 U.S.C. 181, the licensee may foreign file the application pursuant to 37 CFR 5.15(b).

UNITED STATES PATENT AND TRADEMARK OFFICE

UNITED STATES DEPARTMENT OF COMMERCE
United States Patent and Trademark Office
Address: COMMISSIONER FOR PATENTS
P.O. Box 1450
Alexandria, Virginia 22313-1450
www.uspto.gov

QUALCOMM INCORPORATED
5775 MOREHOUSE DR.
SAN DIEGO, CA 92121

Mail Date: 04/20/2010

Applicant	: Inyup Kang	: DECISION ON REQUEST FOR
Patent Number	: 7583555	: RECALCULATION of PATENT
Issue Date	: 09/01/2009	: TERM ADJUSTMENT IN VIEW
Appliction No	: 10/814,935	: OF WYETH AND NOTICE OF INTENT TO
Filed	: 03/30/2004	: ISSUE CERTIFICATE OF CORRECTION
		:

The Request for Recalculation is **GRANTED** to the extent indicated.

The patent term adjustment has been determined to be **622** days. The USPTO will *sua sponte* issue a certificate of correction reflecting the amount of PTA days determined by the recalculation.

Prior to the issuance of the certificate of correction, the USPTO will afford patentee an opportunity to be heard and request reconsideration. Accordingly, patentee has **one month or thirty (30) days**, whichever is longer, to file a request for reconsideration of this patent term adjustment calculation. See 35 U.S.C. 154(b)(3)(B)(ii) and 37 CFR 1.322(a)(4). No extensions of time will be granted under 37 CFR 1.136.

Patentee should use document code PET.OP if electronically filing a request for reconsideration of this patent term adjustment calculation. The patentee must also include the information required by 37 CFR 1.705(b)(2) and the fee required by 37 CFR 1.18(e). If patentee does not file a timely request for reconsideration of this patent term adjustment calculation including the information required by 37 CFR 1.705(b)(2) and the fee required by 37 CFR 1.18(e), the USPTO will issue a certificate of correction reflecting the PTA determination noted above.

Patentee should be aware that in order to preserve the right to review in the United States District Court for the District of Columbia of the USPTO patent term adjustment determination, patentee must ensure that he or she also take the steps required under 35 U.S.C. 154(b)(4)(A) in a timely manner. Nothing in the request for recalculation should be construed as providing an alternative time frame for commencing a civil action under 35 U.S.C. 154(b)(4)(A).

Any questions concerning this decision should be directed to the Office of Patent Legal Administration at 571-272-7702.

UNITED STATES PATENT AND TRADEMARK OFFICE

Commissioner for Patents
United States Patent and Trademark Office
P.O. Box 1450
Alexandria, VA 22313-1450
www.uspto.gov

Patent Department-53051
Kilpatrick Stockton LLP
1001 West Fourth Street
Winston-Salem, NC 27101

COPY MAILED

JUL 06 2007

OFFICE OF PETITIONS

In re Application of	:	
Stephen R. Lawrence et al.	:	
Application No. 10/814,952	:	DECISION ON PETITION
Filed: March 31, 2004	:	TO WITHDRAW
Attorney Docket No. 24207-10094	:	FROM RECORD

This is a decision on the Request to Withdraw as attorney or agent of record under 37 C.F.R. § 1.36(b), filed March 10, 2005.

The request is **NOT APPROVED** as moot.

A review of the file record indicates that the power of attorney to Kilpatrick Stockton LLP has been revoked by the assignee of the patent application on April 21, 2005. Accordingly, the request to withdraw under 37 C.F.R. § 1.36(b) is moot.

All future communications from the Office will continue to be directed to the below-listed address until otherwise notified by applicant.

Telephone inquires concerning this decision should be directed to Terri Williams at 571-272-2991.

Terri Williams

Terri Williams
Petitions Examiner
Office of Petitions

cc: **Google/Fenwick**
Silicon Valley Center
801 Calfornia Street
Mountain View, CA 94041

UNITED STATES PATENT AND TRADEMARK OFFICE

Commissioner for Patents
United States Patent and Trademark Office
P.O. Box 1450
Alexandria, VA 22313-1450
www.uspto.gov

COPY MAILED

JUL 22 2009

OFFICE OF PETITIONS

GOOGLE / FENWICK
SILICON VALLEY CENTER
801 CALIFORNIA ST.
MOUNTAIN VIEW, CA 94041

In re Application of Lawrence et al.	:	
Application No. 10/814,952	:	On Application For
Filing Date: March 31, 2004	:	Patent Term Adjustment
Attorney Docket No. 24207-10094	:	

This is in response to the "Request for Reconsideration of Patent Term Adjustment Under 37 C.F.R. § 1.705(b)" filed June 2, 2009. Applicants submit the correct patent term adjustment to be indicated on the patent is 1294 days, not 741 days as calculated by the Office as of the mailing of the initial determination of patent term adjustment. Applicant requests this correction solely on the basis that the Office will take in excess of three years to issue this patent.

As the instant application for patent term adjustment requests reconsideration of the patent term adjustment as it relates to the Office's failure to issue the patent within 3 years of the filing date, the application for patent term adjustment under 37 CFR 1.705(b) is **DISMISSED as PREMATURE**.

Knowledge of the actual date the patent issues is required to calculate the amount, if any, of additional patent term patentee is entitled to for Office failure to issue the patent within 3 years. See 37 CFR 1.702(b). (This is true even where a request for continued examination (RCE) was filed). The computer will not undertake the § 1.702(b) calculation until the actual date of issuance of the patent has been determined. Likewise, the computer will not calculate any further Office delay under § 1.702(a)(4) or applicant delay under § 1.704(c)(10) until the actual date of issuance of the patent has been determined. As such, the Office can not make a determination on the correctness of the patent term adjustment until the patent has issued.

Requesting reconsideration of the patent term adjustment to be indicated on the patent under 37 CFR 1.705(b) based on the initial determination of patent term adjustment and a projected issuance date of the patent (or even the filing date of the request for continued examination) is premature. Accordingly, it is appropriate to dismiss as premature such a request.

Rather than file an application for patent term adjustment under 37 CFR 1.705(b) contesting the 37 CFR 1.702(b) calculation at the time of the mailing of the notice of allowance, applicant is advised that they may wait until the time of the issuance of the patent and file a request for reconsideration of the patent term adjustment pursuant to 37 CFR 1.705(d). As the USPTO does not calculate the amount of time earned pursuant to 37 CFR 1.702(b) until the time of the

issuance of the patent, the Office will consider any request for reconsideration of the patent term adjustment due to an error in the calculation of 37 CFR 1.702(b) to be timely if the request for reconsideration is filed within two months of the issuance of the patent. However, as to all other bases for contesting the initial determination of patent term adjustment received with the notice of allowance, applicant must timely file an application for patent term adjustment prior to the payment of the issue fee[1].

The Office acknowledges submission of the $200.00 fee set forth in 37 CFR 1.18(e) for consideration of the application for patent term adjustment under 37 CFR 1.705(b).

Any request for reconsideration of the patent term adjustment indicated on the patent must be timely filed within 2 months after issuance pursuant to 37 CFR 1.705(d) and must include payment of the required fee under 37 CFR 1.18(e).

The Office of Data Management has been advised of this decision. This application is being referred to the Office of Data Management for issuance of the patent.

Telephone inquiries regarding this communication should be directed to Petitions Attorney Steven Brantley at (571) 272-3203.

Nancy Johnson
Senior Petitions Attorney
Office of Petitions

[1] For example, if applicant disputes both the calculation of patent term adjustment under 37 CFR 1.702(a)(1) for Office failure to mail a first Office action or notice of allowance not later than fourteen months after the date on which the application was filed and under 37 CFR 1.702(b) for Office failure to issue a patent within three years of the actual filing date of the application, then applicant must still timely file an application for patent term adjustment prior to the payment of the issue fee to contest the calculation of Office delay in issuing a first Office action or notice of allowance. See 37 CFR 1.705(b) and 35 U.S.C. 154(b)(3)(B). A dispute as to the calculation of the §1.702(a)(1) period raised on request for reconsideration of patent term adjustment under 37 CFR 1.705(d) will be dismissed as untimely filed.

UNITED STATES PATENT AND TRADEMARK OFFICE

Commissioner for Patents
United States Patent and Trademark Office
P.O. Box 1450
Alexandria, VA 22313-1450
www.uspto.gov

MAILED

MAR 0 4 2010

OFFICE OF PETITIONS

GOOGLE / FENWICK
SILICON VALLEY CENTER
801 CALIFORNIA ST.
MOUNTAIN VIEW, CA 94041

In re Patent of Lawrence et al.	:	DECISION ON REQUEST
Patent No. 7,581,227	:	FOR RECONSIDERATION OF
Issue Date: August 25, 2009	:	PATENT TERM ADJUSTMENT
Application No. 10/814,952	:	AND NOTICE OF INTENT TO
Filing Date: March 31, 2004	:	ISSUE CERTIFICATE OF
Attorney Docket No. 24207-10094	:	CORRECTION

This is a decision on the petition filed on October 1, 2009, which is being treated as a petition under 37 C.F.R. § 1.705(d) requesting that the patent term adjustment indicated on the above-identified patent be corrected to indicate the term of the above-identified patent is extended or adjusted by one thousand four hundred fifty-six (1,456) days.

The petition to correct the patent term adjustment indicated on the above-identified patent to indicate the term of the above-identified patent is extended or adjusted by one thousand four hundred fifty-six (1,456) days is **GRANTED**.

The $200.00 fee set forth in 37 CFR 1.18(e) has been charged to the deposit account listed in the petition. No additional fees are required.

The application is being forwarded to the Certificates of Branch for issuance of a certificate of correction. The Office will issue a certificate of correction indicating that the term of the above-identified patent is extended or adjusted by **one thousand four hundred fifty-six (1,456)** days.

Telephone inquiries specific to this decision should be directed to Senior Petitions Attorney Steven Brantley at (571) 272-3203.

Nancy Johnson
Senior Petitions Attorney
Office of Petitions

Enclosure: Copy of DRAFT Certificate of Correction

UNITED STATES PATENT AND TRADEMARK OFFICE

CERTIFICATE OF CORRECTION

PATENT NO.	:	7,581,227 B1
ISSUE DATE	:	August 25, 2009
INVENTOR(S)	:	Lawrence et al.

DRAFT

It is certified that error appears in the above-identified patent and that said Letters Patent is hereby corrected as shown below:

On the cover page,

[*] Notice: Subject to any disclaimer, the term of this patent is extended or adjusted under 35 USC 154(b) by 787 days.

Delete the phrase "by 787 days" and insert - by 1,456 days--

UNITED STATES PATENT AND TRADEMARK OFFICE

UNITED STATES DEPARTMENT OF COMMERCE
United States Patent and Trademark Office
Address: COMMISSIONER FOR PATENTS
P.O. Box 1450
Alexandria, Virginia 22313-1450
www.uspto.gov

GOOGLE / FENWICK
SILICON VALLEY CENTER
801 CALIFORNIA ST.
MOUNTAIN VIEW, CA 94041

Mail Date: 04/21/2010

Applicant	: Stephen R. Lawrence	: DECISION ON REQUEST FOR
Patent Number	: 7581227	: RECALCULATION of PATENT
Issue Date	: 08/25/2009	: TERM ADJUSTMENT IN VIEW
Appliction No	: 10/814,952	: OF WYETH AND NOTICE OF INTENT TO
Filed	: 03/31/2004	: ISSUE CERTIFICATE OF CORRECTION
		:

The Request for Recalculation is **GRANTED** to the extent indicated.

The patent term adjustment has been determined to be **2125** days. The USPTO will *sua sponte* issue a certificate of correction reflecting the amount of PTA days determined by the recalculation.

Prior to the issuance of the certificate of correction, the USPTO will afford patentee an opportunity to be heard and request reconsideration. Accordingly, patentee has **one month or thirty (30) days**, whichever is longer, to file a request for reconsideration of this patent term adjustment calculation. See 35 U.S.C. 154(b)(3)(B)(ii) and 37 CFR 1.322(a)(4). No extensions of time will be granted under 37 CFR 1.136.

Patentee should use document code PET.OP if electronically filing a request for reconsideration of this patent term adjustment calculation. The patentee must also include the information required by 37 CFR 1.705(b)(2) and the fee required by 37 CFR 1.18(e). If patentee does not file a timely request for reconsideration of this patent term adjustment calculation including the information required by 37 CFR 1.705(b)(2) and the fee required by 37 CFR 1.18(e), the USPTO will issue a certificate of correction reflecting the PTA determination noted above.

Patentee should be aware that in order to preserve the right to review in the United States District Court for the District of Columbia of the USPTO patent term adjustment determination, patentee must ensure that he or she also take the steps required under 35 U.S.C. 154(b)(4)(A) in a timely manner. Nothing in the request for recalculation should be construed as providing an alternative time frame for commencing a civil action under 35 U.S.C. 154(b)(4)(A).

Any questions concerning this decision should be directed to the Office of Patent Legal Administration at 571-272-7702.

UNITED STATES PATENT AND TRADEMARK OFFICE

Commissioner for Patents
United States Patent and Trademark Office
P.O. Box 1450
Alexandria, VA 22313-1450
www.uspto.gov

GENERAL ELECTRIC COMPANY (PCPI)
C/O FLETCHER YODER
P.O. BOX 692289
HOUSTON, TX 77269-2289

COPY MAILED

JUN 18 2008

OFFICE OF PETITIONS

In re Application of	:	
Robert Stephen Lewandowski et al	:	
Application No. 10/814,956	:	ON PETITION
Filed: March 31, 2004	:	
Attorney Docket No. 132129	:	

This is a decision on the petition under 37 CFR 1.137(b), filed February 19, 2008, to revive the above-identified application.

The petition is **GRANTED**.

The above-identified application became abandoned for failure to reply in a timely manner to the Office action mailed May 11, 2007, which set a shortened statutory period for reply of one (1) month or thirty (30) days (whichever is later). Accordingly, the above-identified application became abandoned on June 12, 2007.

Telephone inquiries concerning this decision should be directed to Irvin Dingle at (571) 272-3210.

This matter is being referred to Technology Center AU 3662 for further processing.

Irvin Dingle
Petitions Examiner
Office of Petitions

UNITED STATES PATENT AND TRADEMARK OFFICE

Commissioner for Patents
United States Patent and Trademark Office
P.O. Box 1450
Alexandria, VA 22313-1450
www.uspto.gov

Robert E. Walter
GE Plastics
One Plastics Avenue
Pittsfield, MA 01201

COPY MAILED

JUL 2 5 2006

OFFICE OF PETITIONS

In re Application of

Agarwal, et al. :

Application No. 10/814,971

: DECISION ON PETITION

Filed: March 31, 2004

:

Attorney Docket No. 139958-2

This is a decision on the petition under 37 CFR 1.137(b), filed April 4, 2006, to revive the above-identified application.

The petition is **GRANTED**.

The above-cited application became abandoned for failure to reply in a timely manner to the non-final Office action mailed September 7, 2005, which set a shortened statutory period for reply of three (3) months from its mailing date. No extension of time pursuant to 37 CFR 1.136(a) was obtained within the allowable period. Accordingly, the application became abandoned on December 8, 2005. A Notice of Abandonment has not yet been mailed.

The amendment filed April 4, 2006, is noted and made of record.

The application is being forwarded to Technology Center 1700, GAU 1712 for further processing.

Telephone inquiries concerning this decision should be directed to the undersigned at (571) 272-3222.

Kenya A. McLaughlin
Petitions Attorney
Office of Petitions

UNITED STATES PATENT AND TRADEMARK OFFICE

Commissioner for Patents
United States Patent and Trademark Office
P.O. Box 1450
Alexandria, VA 22313-1450
www.uspto.gov

FOLEY HOAG, LLP
PATENT GROUP, WORLD TRADE CENTER WEST
155 SEAPORT BLVD
BOSTON MA 02110

COPY MAILED

JUL 3 1 2006

OFFICE OF PETITIONS

In re Application of	:	
LEE, et al.	:	
Application No. 10/814,972	:	DECISION ON PETITION
Filed: March 30, 2004	:	TO WITHDRAW
Attorney Docket No. SUW-015.02	:	FROM RECORD
	:	

This is a decision on the Request to Withdraw as attorney or agent of record under 37 C.F.R. § 1.36(b), filed January 27, 2006.

The request is **APPROVED**.

A grantable request to withdraw as attorney/agent of record must be signed by every attorney/agent seeking to withdraw or contain a clear indication that one attorney is signing on behalf of another/others. A request to withdraw will not be approved unless at least 30 (thirty) days would remain between the date of approval and the later of the expiration date of a time to file a response or the expiration date of the maximum time period which can be extended under 37 C.F.R. § 1.136(a).

The request was signed by Scott E. Kamholz on behalf of all attorneys of record who are associated with customer No. 25181.

All attorneys/agents associated with the Customer Number 25181 have been withdrawn.

Applicant is reminded that there is no attorney of record at this time.

The request to change the correspondence of record is not acceptable as the requested correspondence address is not that of: (1) the first named signing inventor; or (2) an intervening assignee of the entire interest under 37 C.F.R 3.71. The assignee failed to comply with 37 C.F.R. 3.71 and provide the office with a copy of the assignment. All future communications from the Office will be directed to the first named signing inventor at the first copied address below until otherwise properly notified by the applicant.

Telephone inquiries concerning this decision should be directed to April Wise at 571-272-1642.

Denise Pothier
Petitions Examiner
Office of Petitions

cc: Chris Lee
615 North Street
Tewksbury, MA 01876

cc: Bryant Gold
ADVANCED BIONICS CORPORATION
25129 Rye Canyon Road
Valencia, Ca 91355

UNITED STATES PATENT AND TRADEMARK OFFICE

Commissioner for Patents
United States Patent and Trademark Office
P.O. Box 1450
Alexandria, VA 22313-1450
www.uspto.gov

Bryant R. Gold
Laura Haburay Bishop
25129 Rye Canyon Loop
Valencia, CA 91355

COPY MAILED

JUL 03 2008

OFFICE OF PETITIONS

In re Application of	:	
Chris Lee, et al.	:	
Application No. 10/814,972	:	DECISION ON PETITION
Filed: March 30, 2004	:	TO WITHDRAW
Attorney Docket No. 9450-13DV	:	FROM RECORD
	:	

This is a decision on the Request to Withdraw as attorney or agent of record under 37 C.F.R. § 1.36(b), filed February 15, 2008.

The request is **NOT APPROVED** because it is moot.

A review of the file record indicates that the power of attorney to Bryant R. Gold and Laura Haburay Bishop has been revoked by the assignee of the patent application on September 27, 2007. Accordingly, the request to withdraw under 37 C.F.R. § 1.36(b) is moot.

All future communications from the Office will continue to be directed to the below-listed address until otherwise notified by applicant.

Telephone inquires concerning this decision should be directed to Terri Williams at 571-272-2991.

Terri Williams
Petitions Examiner
Office of Petitions

cc: **Myers Bigel Sibley & Sajovec**
PO Box 37428
Raleigh, NC 27627

UNITED STATES PATENT AND TRADEMARK OFFICE

Commissioner for Patents
United States Patent and Trademark Office
P.O. Box 1450
Alexandria, VA 22313-1450
www.uspto.gov

RAJ S. DAVE
MORRISON & FOERSTER LLP
SUITE 300
1650 TYSONS BLVD.
MCLEAN VA 22102

COPY MAILED

JUL 16 2007

OFFICE OF PETITIONS

In re Application of :

SIBBETT, Scott :
Application No. 10/814,979 : DECISION ON PETITION
Filed: March 30, 2004 : TO WITHDRAW
Attorney Docket No. **INTEL1530 (P18528)** : FROM RECORD

This is a decision on the Request to Withdraw as attorney or agent of record under 37 C.F.R. § 1.36(b), filed April 06, 2007.

The request is **APPROVED**.

A grantable request to withdraw as attorney/agent of record must be signed by every attorney/agent seeking to withdraw or contain a clear indication that one attorney is signing on behalf of another/others. A request to withdraw will not be approved unless at least 30 (thirty) days would remain between the date of approval and the later of the expiration date of a time to file a response or the expiration date of the maximum time period which can be extended under 37 C.F.R. § 1.136(a).

The request was signed by Peter J. Davis on behalf of all attorneys of record. Applicant is reminded that there is no attorney of record at this time.

The request to change the correspondence of record is not acceptable as the requested correspondence address is not that of: (1) the first named signing inventor; or (2) an intervening assignee of the entire interest under 37 C.F.R 3.71. All future communications from the Office will be directed to the first named signing inventor at the first copied address below until otherwise properly notified by the applicant.

There is an outstanding Office action mailed March 20, 2007 that requires a reply from the applicant.

Telephone inquiries concerning this decision should be directed to Tredelle Jackson at 571-272-2783.

Monica A. Graves
Petitions Examiner
Office of Petitions

cc: **SCOTT SIBBETT**
P.O. BOX 2571
CORRALES, NM 87048

cc: **RAJ S. DAVE**
DARBY & DARBY P.C.
1500 K STREET, N.W.
SUITE 250
WASHINGTON, DC 20005-1714

UNITED STATES PATENT AND TRADEMARK OFFICE

Commissioner for Patents
United States Patent and Trademark Office
P.O. Box 1450
Alexandria, VA 22313-1450
www.uspto.gov

COPY MAILED

AUG 1 0 2009

OFFICE OF PETITIONS

Client 21058
c/o DARBY & DARBY P.C.
P.O. BOX 770
CHURCH STREET STATION
NEW YORK NY 10008-0770

In re Application of	
Scott Sibbett	
Application No. 10/814,979	DECISION ON PETITION
Filed: March 30, 2004	TO WITHDRAW
Attorney Docket No. **21058/0206803-US0**	FROM RECORD

This is a decision on the Request to Withdraw as attorney or agent of record under 37 CFR § 1.36(b), filed July 13, 2009.

The request is **NOT APPROVED**.

A grantable request to withdraw as attorney/agent of record must be signed by every attorney/agent seeking to withdraw or contain a clear indication that one attorney is signing on behalf of another/others.

The request cannot be approved.

In order to request or take action in a patent matter, the assignee must establish its ownership of the patent to the satisfaction of the Director. In this regard, a Statement under 37 CFR 3.73(b) must have either: (i) documentary evidence of a chain of title from the original owner to the assignee (*e.g.*, copy of an executed assignment), and a statement affirming that the documentary evidence of the chain of title from the original owner to the assignee was or concurrently is being submitted for recordation pursuant to § 3.11; or (ii) a statement specifying where documentary evidence of a chain of title from the original owner to the assignee is recorded in the assignment records of the Office (*e.g.*, reel and frame number).

All future communications from the Office will continue to be directed to the above-listed address until otherwise notified by applicant.

Telephone inquiries concerning this decision should be directed to JoAnne Burke at 571-272-4584.

JoAnne Burke
Petitions Examiner
Office of Petitions

UNITED STATES PATENT AND TRADEMARK OFFICE

Commissioner for Patents
United States Patent and Trademark Office
P.O. Box 1450
Alexandria, VA 22313-1450
www.uspto.gov

COPY MAILED

SEP 30 2009

OFFICE OF PETITIONS

Client 21058
c/o DARBY & DARBY P.C.
P.O. BOX 770
CHURCH STREET STATION
NEW YORK NY 10008-0770

In re Application of	:	
Scott Sibbett	:	
Application No. 10/814,979	:	DECISION ON PETITION
Filed: March 30, 2004	:	TO WITHDRAW
Attorney Docket No. **21058/0206803-US0**	:	FROM RECORD
	:	

This is a decision on the Request to Withdraw as attorney or agent of record under 37 CFR. § 1.36(b), filed August 17, 2009.

The request is **NOT APPROVED** as moot.

A review of the file record indicates that the power of attorney to attorneys/agents associated with Customer Number 07278 has been revoked by the assignee of the patent application on August 19, 2009. Accordingly, the request to withdraw under 37 C.F.R. § 1.36(b) is moot.

All future communications from the Office will continue to be directed to the below-listed address until otherwise notified by applicant.

Telephone inquires concerning this decision should be directed to JoAnne Burke at 571-272-4584.

JoAnne Burke
Petitions Examiner
Office of Petitions

cc: Pillsbury Winthrop Shaw Pittman LLP
P.O. Box 10500
McLean VA 22102

UNITED STATES PATENT AND TRADEMARK OFFICE

Commissioner for Patents
United States Patent and Trademark Office
P.O. Box 1450
Alexandria, VA 22313-1450
www.uspto.gov

MORRISON & FOERSTER LLP
1650 TYSONS BOULEVARD
SUITE 400
MCLEAN, VA 22102

COPY MAILED

SEP 20 2007

OFFICE OF PETITIONS

In re Application of Tae-Woong Koo, et al. Application No. 10/814,981 Filed: March 30, 2004 Attorney Docket No. 070702010600	DECISION ON PETITION TO WITHDRAW FROM RECORD

This is a decision on the Request to Withdraw as attorney or agent of record under 37 C.F.R. § 1.36(b) filed April 6, 2007.

The request is **DISMISSED** as moot.

A review of the file record indicates that the power of attorney to Morrison & Foerster, LLP has been revoked by the assignee of the patent application on June 9, 2007. Accordingly, the request to withdraw under 37 C.F.R. § 1.36(b) is moot.

All future communications from the Office will continue to be directed to the below-listed address until otherwise notified by applicant.

Telephone inquires concerning this decision should be directed to undersigned at 571-272-1642.

April M. Wise
Petitions Examiner
Office of Petitions

cc: RAJ S. DAVE', PHD
DARBY & DARBY, PC
1500 K STREET NW
SUITE 250
WASHINGTON, DC 20005-1714

UNITED STATES PATENT AND TRADEMARK OFFICE

UNITED STATES DEPARTMENT OF COMMERCE
United States Patent and Trademark Office
Address: COMMISSIONER FOR PATENTS
P.O. Box 1450
Alexandria, Virginia 22313-1450
www.uspto.gov

APPLICATION NUMBER	FILING OR 371 (c) DATE	FIRST NAMED APPLICANT	ATTY. DOCKET NO./TITLE
10/814,981	03/30/2004	Tae-Woong Koo	042390.P18518

CONFIRMATION NO. 8675

OC000000025769509

8791
BLAKELY SOKOLOFF TAYLOR & ZAFMAN
1279 OAKMEAD PARKWAY
SUNNYVALE, CA 94085-4040

Date Mailed: 09/11/2007

NOTICE REGARDING CHANGE OF POWER OF ATTORNEY

This is in response to the Power of Attorney filed 06/09/2007.

- The Power of Attorney to you in this application has been revoked by the assignee who has intervened as provided by 37 CFR 3.71. Future correspondence will be mailed to the new address of record(37 CFR 1.33).

Office of Initial Patent Examination (571) 272-4000, or 1-800-PTO-9199
FORMER ATTORNEY/AGENT COPY

UNITED STATES PATENT AND TRADEMARK OFFICE

Commissioner for Patents
United States Patent and Trademark Office
P.O. Box 1450
Alexandria, VA 22313-1450
www.uspto.gov

Morrison & Foerster LLP
1650 Tysons Blvd., Suite 300
McLean, VA 22102

COPY MAILED

AUG 3 1 2007

OFFICE OF PETITIONS

In re Application of	:	
Valery M. Dubin et al.	:	
Application No. 10/814,982	:	DECISION ON PETITION
Filed: March 30, 2004	:	TO WITHDRAW
Attorney Docket No. 21058/0206743-US0	:	FROM RECORD
	:	

This is a decision on the Request to Withdraw as attorney or agent of record under 37 C.F.R. § 1.36(b), filed April 6, 2007.

The request is **NOT APPROVED** as moot.

A review of the file record indicates that the power of attorney to Morrison & Foerster LLP has been revoked by the assignee of the patent application on June 19, 2007. Accordingly, the request to withdraw under 37 C.F.R. § 1.36(b) is moot.

All future communications from the Office will continue to be directed to the below-listed address until otherwise notified by applicant.

Telephone inquires concerning this decision should be directed to Terri Williams at 571-272-2991.

T. Williams

Terri Williams
Petitions Examiner
Office of Petitions

cc: **Darby & Darby P.C.**
P.O. Box 770
Church Street Station
New York, NY 10008-0770

UNITED STATES PATENT AND TRADEMARK OFFICE

Commissioner for Patents
United States Patent and Trademark Office
P.O. Box 1450
Alexandria, VA 22313-1450
www.uspto.gov

KACVINSKY LLC
C/O INTELLEVATE
P.O. BOX 52050
MINNEAPOLIS MN 55402

COPY MAILED

MAR 1 0 2009

OFFICE OF PETITIONS

In re Application of	:	
Aldrich et al.	:	
Application No. 10/814,991	:	DECISION ON PETITION
Filed: March 26, 2004	:	
Attorney Docket No. 1020.P18900	:	

This is a decision on the petition under the unintentional provisions of 37 CFR 1.137(b), filed August 25, 2008, to revive the above-identified application.

The petition is **GRANTED**.

This application became abandoned for failure to timely pay the issue and publication fees on or before December 27, 2007, as required by the Notice of Allowance and Fee(s) Due mailed September 27, 2007. Accordingly, the date of abandonment of this application is December 28, 2007. A Notice of Abandonment was mailed January 24, 2008.

The petition satisfies the requirements of 37 CFR 1.137(b) in that petitioner has supplied (1) the reply in the form of payment of the issue fee of $1,440.00 and publication fee of $300.00; (2) the petition fee of $1,540.00; and (3) a proper statement of unintentional delay.

Telephone inquiries concerning this decision should be directed to Joan Olszewski at (571) 272-7751.

This application is being referred to the Office of Data Management for processing into a patent.

/Liana Walsh/
Liana Walsh
Petitions Examiner
Office of Petitions

UNITED STATES PATENT AND TRADEMARK OFFICE

OFFICE OF DATA MANAGEMENT

PHILIP S. JOHNSON
JOHNSON & JOHNSON
ONE JOHNSON & JOHNSON PLAZA
NEW BRUNSWICK, NJ 08933-7003

In re Application of	:	
BECKMAN, ANDREW T. et al	:	**DECISION ON PETITION**
Application No. 10/815,004	:	
Filed: March 31, 2004	:	
Attorney Docket No. END5096.0515521	:	

NOV 13 2008

This is a decision on the Request To Withdraw Holding Abandonment received in the United States Patent and Trademark Office (USPTO) October 13, 2008, which is being treated as a Petition To Withdraw Holding Of Abandonment for the above-identified application.

The petition is **GRANTED**.

The application was held abandoned for failure to timely pay the issue fee as required by the Notice of Allowance and Fee(s) Due, mailed June 20, 2008, which set forth a three (3) month statutory period for reply. Accordingly, the Notice of Abandonment was mailed on October 13, 2008.

In view of the foregoing, the holding of abandonment for failure to timely pay the issue fee is hereby withdrawn and the application restored to pending status.

Telephone inquires concerning this decision be directed to the undersigned in the Office of Patent Publication at 703-305-9250 x 154.

Anita Greene
Application Assistance Unit
Office of Data Management

UNITED STATES PATENT AND TRADEMARK OFFICE

Commissioner for Patents
United States Patent and Trademark Office
P.O. Box 1450
Alexandria, VA 22313-1450
www.uspto.gov

KNOBBE MARTENS OLSON & BEAR LLP
2040 MAIN STREET
FOURTEENTH FLOOR
IRVINE CA 92614

COPY MAILED

SEP 27 2005

OFFICE OF PETITIONS

In re Application of	:	
Jordan et al.	:	
Application No.10/815,007	:	DECISION ON PETITION
Filed: March 31, 2004	:	
Attorney Docket No. PRNYX.001C1	:	

This is a decision on the petition under 37 CFR §1.137(b) filed September 12, 2005 to revive the above-identified application.

This petition is hereby **Dismissed.**

Any request for reconsideration must be submitted within TWO (2) Months from the mail date of this decision. Extensions of time under 37 CFR 1.136(a) are permitted. The reconsideration request should include a cover letter entitled "Renewed Petition under 37 CFR 1.137(b)". This is **not** a final agency action within the meaning of 5 U.S.C. §704.

This above-identified application became abandoned for failure to file a response to a Notice to file Missing Parts of a Nonprovisional Application which was mailed on June 14, 2004. The Notice to File Missing Parts set an extendable two (2) month period for reply. No extensions of time were obtained under the provisions of 37 CFR §1.136(a). Accordingly, this application became abandoned on August 15, 2004. This decision precedes the mailing of a Notice of Abandonment.

A grantable petition under 37 CFR 1.137(b) must be accompanied by: (1) the required reply, unless previously filed; (2) the petition fee as set forth in 37 CFR 1.17(m); (3) a statement that the entire delay in filing the required reply from the due date for the reply until the filing of a grantable petition pursuant to 37 CFR 1.137(b) was unintentional; and (4) any terminal disclaimer (and fee as set forth in 37 CFR 1.20(d)) required by 37 CFR 1.137(c). Where there is a question as to whether either the abandonment or the delay in filing a petition under 37 CFR 1.137 was unintentional, the Commissioner may require additional information. See MPEP 711.03 (c)(III)(c) and (D).

The instant petition lacks item (1). Although petitioner has provided an executed declaration, the declaration does not meet the requirements of 37 CFR 1.63 (a)(1). The

declaration has not been executed by Theo Mann. Where an inventor refuses or cannot be located a petition under 37 CFR 1.47 must be filed. Under 37 CFR 1.47(b) it may be appropriate for a representative to execute a declaration on behalf of an assignee. Where at least one inventor executes a declaration, a petition under 37 CFR 1.47(a) is appropriate. Under 37 CFR 1.47(a), an oath or declaration signed by all the available joint inventors with the signature block of the nonsigning inventor(s) left blank may be treated as having been signed by all the available joint inventors on behalf of the nonsigning inventor(s), unless otherwise indicated. See 35 USC 116 and MPEP 409.03

A revocation of Power of Attorney was filed on October 27, 2004. However a review of the file does not show that a 37 CFR 3.73 statement has been filed. Accordingly the revocation and change of correspondence address will not be entered. While a courtesy copy of this decision is being mailed to the person signing the present petition, all future correspondence will be directed to the address currently of record until such time as appropriate instructions are received to the contrary.

Petitioner submitted a five (5) month request for extension of time. However, pursuant to 37 CFR §1.136, an extension of time must be filed prior to the expiration of the maximum extendable period for reply. See In re Application of S., 8 USPQ2d 1630, 1631 (Comm'r Pats. 1988) Petitioner's period for extension of time expired on January 15, 2005. Petitioner is ineligible for any extensions of time. Accordingly, deposit account number 20-1430 will be credited with $1080.00 for fees paid to acquire an extension of time.

Further Correspondence with respect to this matter should be addressed as follows:

By mail:	Mail Stop Petition Commissioner for Patents P.O. Box 1450 Alexandria, VA 22313-1450
By facsimile:	(571) 273-8300
By delivery service: (FedEx, UPS, DHL, etc.)	U.S. Patent and Trademark Office Customer Service Window, Randolph Building 401 Dulany Street Alexandria, VA 22314

Telephone inquiries concerning this matter should be directed to the undersigned at (571) 272-3215.

Charlema R. Grant

Charlema R. Grant
Petitions Attorney
Office of Petitions

cc: Steven C. Petersen
Townsend & Townsend & Crew LLP
12730 High Bluff Drive, Ste. 400
San Diego, CA 92130

UNITED STATES PATENT AND TRADEMARK OFFICE

Commissioner for Patents
United States Patent and Trademark Office
P.O. Box 1450
Alexandria, VA 22313-1450
www.uspto.gov

TOWNSEND AND TOWNSEND AND CREW, LLP
TWO EMBARCADERO CENTER
EIGHTH FLOOR
SAN FRANCISCO CA 94111-3834

COPY MAILED

FEB 0 2 2006

OFFICE OF PETITIONS

In re Application of	:	
Jordan et al.	:	
Application No.10/815,007	:	DECISION ON PETITION
Filed: March 31, 2004	:	
Attorney Docket No. 022010-000310US	:	

This is a decision on renewed petition under 37 CFR §1.137(b) filed November 21, 2005 to revive the above-identified application.

This above-identified application became abandoned for failure to file a response to a Notice to file Missing Parts of a Nonprovisional Application which was mailed on June 14, 2004. The Notice to File Missing Parts set an extendable two (2) month period for reply. No extensions of time were obtained under the provisions of 37 CFR §1.136(a). Accordingly, this application became abandoned on August 15, 2004. This decision precedes the mailing of a Notice of Abandonment. A petition filed under 37 CFR 1.137(b) was dismissed on September 27, 2005.

The requirements for a grantable petition under 37 CFR §1.137(b) have been met. This petition is hereby **Granted**.

Petitioner has inadvertently been charged the petition fee twice. Accordingly, deposit account no. 20-1430 will be refunded $750.00.

This application is being forwarded to the Office of Initial Patent Examination for further processing of the application.

Telephone inquiries concerning this matter should be directed to the undersigned at (571) 272-3215.

Charlema R. Grant
Petitions Attorney
Office of Petitions

UNITED STATES PATENT AND TRADEMARK OFFICE

Commissioner for Patents
United States Patent and Trademark Office
P.O. Box 1450
Alexandria, VA 22313-1450
www.uspto.gov

TOWNSEND AND TOWNSEND AND CREW, LLP
TWO EMBARCADERO CENTER
EIGHTH FLOOR
SAN FRANCISCO CA 94111-3834

COPY MAILED

FEB 0 2 2006

OFFICE OF PETITIONS

In re Application of
Jordan et al.
Application No. 10/815,007
Filed: March 31, 2004
Attorney Dkt. No.: 022010-000310US
Title of Invention: Breast Milk
Expression System and Method

DECISION ON PETITION

This is a decision on the renewed petition under 37 CFR §1.137(b), November 21, 2005, to revive the above-identified application.

This above-identified application became abandoned for failure to file a response to a Notice to file Missing Parts of a Nonprovisional Application which was mailed on June 14, 2004. The Notice to File Missing Parts set an extendable two (2) month period for reply. No extensions of time were obtained under the provisions of 37 CFR §1.136(a). Accordingly, this application became abandoned on August 15, 2004. This decision precedes the mailing of a Notice of Abandonment. A petition to revive under 37 CFR 1.137(b) was dismissed on September 27, 2005.

The requirements for a grantable petition under 37 CFR §1.137(b) have been met. This petition is hereby **Granted**.

This application is being forwarded to the Office of Initial Patent Examination for further processing of the application.

Telephone inquiries concerning this matter should be directed to the undersigned at (571) 272-3215.

Charlema R. Grant
Petitions Attorney
Office of Petitions

SPE RESPONSE FOR CERTIFICATE OF CORRECTION

Paper No.: ___

DATE : 2/19/08

TO SPE OF : ART UNIT 3767

SUBJECT : Request for Certificate of Correction for Appl. No.: 10/815014 Patent No: 7220247 B2

A response is requested with respect to a request for a certificate of correction.

With respect to the change(s) requested to correct Office and/or Applicant's errors, should the patent read as shown in the certificate of correction attached herewith or the COCIN document(s), in IFW images for the above-identified patented application? No new matter should be introduced, nor should the scope or meaning of the claims be changed.

If the response is for an IFW, within **7** days, please complete and forward the response, to the employee (named below) via scanning into application images, using document code **COCX**.

If the response is for a paper file wrapper, please complete the response and forward the response with the paper file wrapper, to the employee (named below), within **7** days, to:

Certificates of Correction Branch (CofC)
South Tower - 9A22
Palm Location 7580

VIRGINIA TOLBERT
Certificates of Correction Branch
703-308-9390 ext. 113

Thank You For Your Assistance

The request for issuing the above-identified correction(s) is hereby:
Note your decision on the appropriate box.

- ☒ **Approved** — **All** changes apply.
- ☐ **Approved in Part** — Specify below which changes **do not** apply.
- ☐ **Denied** — State the reasons for denial below.

Comments: _____

KEVIN C. SIMMONS
SUPERVISORY PATENT EXAMINER

Catherine Witczak/ (11/06/2009)

Kevin C. Simmons
SPE

3767
Art Unit

UNITED STATES PATENT AND TRADEMARK OFFICE

Commissioner for Patents
United States Patent and Trademark Office
P.O. Box 1450
Alexandria, VA 22313-1450
www.uspto.gov

RADER FISHMAN & GRAUER PLLC
LION BUILDING
1233 20TH STREET N.W., SUITE 501
WASHINGTON DC 20036

MAILED

OCT 08 2009

OFFICE OF PETITIONS

In re Application of	:	
Glassman et al.	:	
Application No. 10/815,016	:	ON APPLICATION FOR
Filed: March 31, 2004	:	PATENT TERM ADJUSTMENT
Attorney Docket No. SONY-06700	:	

This is in response to the APPLICATION FOR PATENT TERM ADJUSTMENT UNDER 37 C.F.R. § 1.705(b) filed July 10, 2009. Applicants submit that the correct patent term adjustment to be indicated on the patent is at least one thousand two hundred-twenty-five (1,225) days, not five hundred twenty-two (522) days as calculated by the Office as of the mailing of the initial determination of patent term adjustment. Applicants seek this correction solely on the basis that the Office will take in excess of three years to issue this patent.

As the instant application for patent term adjustment requests reconsideration of the patent term adjustment as it relates to the Office's failure to issue the patent within three years of the filing date, the application for patent term adjustment under 37 CFR 1.705(b) is **DISMISSED as PREMATURE**.

Knowledge of the actual date the patent issues is required to calculate the amount, if any, of additional patent term patentees are entitled to for Office failure to issue the patent within three years. See 37 CFR 1.702(b). (This is true even where a request for continued examination (RCE) was filed). The computer will not undertake the § 1.702(b) calculation until the actual date of issuance of the patent has been determined. Likewise, the computer will not calculate any further Office delay under 37 CFR 1.702(a)(4) or applicant delay under 37 CFR

1.704(c)(10) until the actual date of issuance of the patent has been determined. As such, the Office cannot make a determination on the correctness of the patent term adjustment until the patent has issued.

Requesting reconsideration of the patent term adjustment to be indicated on the patent under 37 CFR 1.705(b) based on the initial determination of patent term adjustment and a projected issuance date of the patent (or even the filing date of the request for continued examination) is premature. Accordingly, it is appropriate to dismiss such a request as premature.

Rather than file an application for patent term adjustment under 37 CFR 1.705(b) contesting the 37 CFR 1.702(b) calculation at the time of the mailing of the notice of allowance, applicants are advised that they may wait until the time of the issuance of the patent and file a request for reconsideration of the patent term adjustment pursuant to 37 CFR 1.705(d). As the USPTO does not calculate the amount of time earned pursuant to 37 CFR 1.702(b) until the time of the issuance of the patent, the Office will consider any request for reconsideration of the patent term adjustment due to an error in the calculation of 37 CFR 1.702(b) to be timely if the request for reconsideration is filed within two months of the issuance of the patent. However, as to all other bases for contesting the initial determination of patent term adjustment received with the notice of allowance, applicants must timely file an application for patent term adjustment prior to the payment of the issue fee.[1]

The Office acknowledges the $200.00 fee set forth in 37 CFR 1.18(e) for consideration of the application for patent term adjustment under 37 CFR 1.705(b).

---

[1] For example, if applicants dispute both the calculation of patent term adjustment under 37 CFR 1.702(a)(1) for Office failure to mail a first Office action or notice of allowance not later than fourteen months after the date on which the application was filed, and under 37 CFR 1.702(b) for Office failure to issue a patent within three years of the actual filing date of the application, then applicants must still timely file an application for patent term adjustment prior to the payment of the issue fee to contest the calculation of Office delay in issuing a first Office action or notice of allowance. See 37 CFR 1.705(b) and 35 U.S.C. 154(b)(3)(B). A dispute as to the calculation of the § 1.702(a)(1) period raised on request for reconsideration of patent term adjustment under 37 CFR 1.705(d) will be dismissed as untimely filed.

Any request for reconsideration of the patent term adjustment indicated on the patent must be timely filed within two months after issuance pursuant to 37 CFR 1.705(d) and must include payment of the required fee under 37 CFR 1.18(e).

The Office of Data Management has been advised of this decision. This application is being referred to the Office of Data Management for issuance of the patent.

Telephone inquiries specific to this decision should be directed to the undersigned at (571) 272-3211.

Christina Tartera Donnell

Christina Tartera Donnell
Senior Petitions Attorney
Office of Petitions

UNITED STATES PATENT AND TRADEMARK OFFICE

UNITED STATES DEPARTMENT OF COMMERCE
United States Patent and Trademark Office
Address: COMMISSIONER FOR PATENTS
P.O. Box 1450
Alexandria, Virginia 22313-1450
www.uspto.gov

RADER FISHMAN & GRAUER PLLC
LION BUILDING
1233 20TH STREET N.W., SUITE 501
WASHINGTON, DC 20036

Mail Date: 05/18/2010

Applicant	: Ellen Glassman	: DECISION ON REQUEST FOR
Patent Number	: 7616860	: RECALCULATION of PATENT
Issue Date	: 11/10/2009	: TERM ADJUSTMENT IN VIEW
Application No	: 10/815,016	: OF WYETH AND NOTICE OF INTENT TO
Filed	: 03/31/2004	: ISSUE CERTIFICATE OF CORRECTION
		:

The Request for Recalculation is **GRANTED** to the extent indicated.

The patent term adjustment has been determined to be **1055** days. The USPTO will *sua sponte* issue a certificate of correction reflecting the amount of PTA days determined by the recalculation.

Prior to the issuance of the certificate of correction, the USPTO will afford patentee an opportunity to be heard and request reconsideration. Accordingly, patentee has **one month or thirty (30) days**, whichever is longer, to file a request for reconsideration of this patent term adjustment calculation. See 35 U.S.C. 154(b)(3)(B)(ii) and 37 CFR 1.322(a)(4). No extensions of time will be granted under 37 CFR 1.136.

Patentee should use document code PET.OP if electronically filing a request for reconsideration of this patent term adjustment calculation. The patentee must also include the information required by 37 CFR 1.705(b)(2) and the fee required by 37 CFR 1.18(e). If patentee does not file a timely request for reconsideration of this patent term adjustment calculation including the information required by 37 CFR 1.705(b)(2) and the fee required by 37 CFR 1.18(e), the USPTO will issue a certificate of correction reflecting the PTA determination noted above.

Patentee should be aware that in order to preserve the right to review in the United States District Court for the District of Columbia of the USPTO patent term adjustment determination, patentee must ensure that he or she also take the steps required under 35 U.S.C. 154(b)(4)(A) in a timely manner. Nothing in the request for recalculation should be construed as providing an alternative time frame for commencing a civil action under 35 U.S.C. 154(b)(4)(A).

Any questions concerning this decision should be directed to the Office of Patent Legal Administration at 571-272-7702.

UNITED STATES PATENT AND TRADEMARK OFFICE

Commissioner for Patents
United States Patent and Trademark Office
P.O. Box 1450
Alexandria, VA 22313-1450
www.uspto.gov

RADER FISHMAN & GRAUER PLLC
LION BUILDING
1233 20TH STREET N.W., SUITE 501
WASHINGTON DC 20036

MAILED

MAY 11 2010

OFFICE OF PETITIONS

In re Patent No. 7,616,860	:	DECISION ON REQUEST FOR
Glassman et al.	:	RECONSIDERATION OF
Issue Date: November 10, 2009	:	PATENT TERM ADJUSTMENT AND
Application No. 10/815,016	:	NOTICE OF INTENT TO ISSUE
Filed: March 31, 2004	:	CERTIFICATE OF CORRECTION
Atty. Docket No. SONY-06700	:	

This is a decision on the petition filed on December 16, 2009, which is being treated as a petition under 37 CFR 1.705(d) requesting that the patent term adjustment indicated on the above-identified patent be corrected to indicate that the term of the above-identified patent is extended or adjusted by one thousand three hundred forty-eight (1348) days.

The petition to correct the patent term adjustment indicated on the above-identified patent is **GRANTED to the extent indicated herein.** The term of the above-identified patent is extended or adjusted by **eight hundred eighty-seven (887) days**.

Patentee acknowledges 556 days of A delay, 955 days of delay under 37 CFR 1.702(b), 34 days of applicant delay, and a period of overlap between A delay and B delay. However, patentee incorrectly calculated B delay and the overlapping period.

37 CFR 1.703(b) indicates that the period of adjustment under 37 CFR 1.702(b) ("over three year period") is the number of days, if any, in the period beginning on the day after the date that

is three years after the actual filing date of the application and ending on the date a patent was issued. 35 U.S.C. 154(b)(1)(B). However, 37 CFR 1.703(b) also sets forth the limitations on patent term adjustment specified in 35 U.S.C. 154(b)(1)(B)(i) and (ii). Specifically, 37 CFR 1.703(b)(4)[1] provides that the period of adjustment of the term of a patent shall not include the period equal to the sum of the period of pendency consumed by appellate review under 35 U.S.C. 134, 141, 145, whether successful or unsuccessful (35 U.S.C. 154(b)(1)(B)(ii)).

The Office agrees with patentee that the "over three year period" is 955 days. However, patentee failed to account for the filing of the notices of appeal on July 12, 2007, and October 21, 2008. The Office reminds patentee that the period consumed by appellate review, whether successful or not, is excluded from the calculation of B delay. See 35 U.S.C. 154(b)(1)(B)(ii). In this instance, the total period consumed by appellate review is 547 days (355 days beginning on the date on which the first notice of appeal was filed, July 12, 2007, and ending on the date of the mailing of the final Office action, June 30, 2008, plus 192 days beginning on the date on which the second notice of appeal was filed, October 21, 2008, and ending on the date of the mailing of the notice of allowance, April 30, 2009). Thus, B delay is 408 days (955 - 547).

Furthermore, the Office has determined that the overlapping period between A delay and B delay is 43 (not 129) days.

Accordingly, the patent term adjustment is 887 days (556 days of A delay + 408 days of B delay - 43 days of overlap - 34 days of applicant delay).

The Office will *sua sponte* issue a certificate of correction. Pursuant to 37 CFR 1.322, the Office will not issue a

---

[1] The number of days, if any, in the period beginning on the date on which a notice of appeal to the Board of Patent Appeals and Interferences was filed under 35 U.S.C. 134 and § 41.31 of this title and ending on the date of the last decision by the Board of Patent Appeals and Interferences or by a Federal court in an appeal under 35 U.S.C. 141 or a civil action under 35 U.S.C. 145, or on the date of mailing of either an action under 35 U.S.C. 132, or a notice of allowance under 35 U.S.C. 151, **whichever occurs first, if the appeal did not result in a decision by the Board of Patent Appeals and Interferences**. 37 CFR 1.703(b) (emphasis added).

certificate of correction without first providing assignee or patentee an opportunity to be heard. Accordingly, patentee is given **one (1) month or thirty (30) days**, whichever is longer, from the mail date of this decision to respond. No extensions of time will be granted under § 1.136.

The Office acknowledges the submission of the $200.00 fee set forth in 37 CFR 1.18(e). No additional fee is due.

This matter is being referred to the Certificates of Correction Branch for issuance of a certificate of correction. The Office will issue a certificate of correction indicating that the term of the above-identified patent is extended or adjusted by **eight hundred eighty-seven (887) days.**

Telephone inquiries specific to this matter should be directed to the undersigned at (571) 272-3211.

C. T. Donnell

Christina Tartera Donnell
Senior Petitions Attorney
Office of Petitions

Enclosure: Copy of DRAFT Certificate of Correction

UNITED STATES PATENT AND TRADEMARK OFFICE

CERTIFICATE OF CORRECTION

PATENT: 7,616,860 B2

DATED: Nov. 10, 2009 **DRAFT**

INVENTOR(S): Glassman et al.

It is certified that error appears in the above-identified patent and that said Letters Patent is hereby corrected as shown below:

On the cover page,

[*] Notice: Subject to any disclaimer, the term of this patent is extended or adjusted under 35 USC 154(b) by 921 days

Delete the phrase "by 921 days" and insert – by 887 days--

Day : Monday
Date: 5/10/2010

PALM INTRANET

Time: 13:04:49

PTA Calculations for Application: 10/815016			
Application Filing Date:	03/31/2004	PTO Delay (PTO):	955
Issue Date of Patent:	11/10/2009	Three Years:	0
Pre-Issue Petitions:	0	Applicant Delay (APPL):	34
Post-Issue Petitions:	0	Total PTA (days):	887
PTO Delay Adjustment:	-34		

File Contents History

Number	Date	Contents Description	PTO	APPL	START
81	05/10/2010	ADJUSTMENT OF PTA CALCULATION BY PTO		34	
77.5	10/21/2009	PTA 36 MONTHS	399		
77	11/10/2009	PATENT ISSUE DATE USED IN PTA CALCULATION			
76	10/15/2009	EXPORT TO FINAL DATA CAPTURE			
75	10/14/2009	DISPATCH TO FDC			
74	10/08/2009	MAIL-PETITION DECISION - DISMISSED			
73	10/08/2009	PETITION DECISION - DISMISSED			
72	07/29/2009	RESPONSE TO REASONS FOR ALLOWANCE			
71	08/04/2009	APPLICATION IS CONSIDERED READY FOR ISSUE			
70	07/29/2009	ISSUE FEE PAYMENT VERIFIED			
69	07/29/2009	ISSUE FEE PAYMENT RECEIVED			
68	07/10/2009	PETITION ENTERED			
67	06/04/2009	FINISHED INITIAL DATA CAPTURE			
66	05/05/2009	EXPORT TO INITIAL DATA CAPTURE			
65	04/30/2009	MAIL NOTICE OF ALLOWANCE	43		53
64	04/28/2009	ISSUE REVISION COMPLETED			
63	04/28/2009	DOCUMENT VERIFICATION			
62	04/27/2009	NOTICE OF ALLOWANCE DATA VERIFICATION COMPLETED			
61	04/27/2009	NOTICE OF ALLOWABILITY			
60	01/29/2009	APPEAL BRIEF REVIEW COMPLETE			
59	01/29/2009	DATE FORWARDED TO EXAMINER			
58	12/15/2008	APPEAL BRIEF FILED			
57	12/17/2008	REQUEST FOR REFUND			
56	12/10/2008	NOTICE -- DEFECTIVE APPEAL BRIEF			

55	12/05/2008	APPEAL BRIEF REVIEW COMPLETE			
54	12/05/2008	DATE FORWARDED TO EXAMINER			
53.1	11/18/2008	DEFECTIVE / INCOMPLETE APPEAL BRIEF FILED			
53	11/18/2008	APPEAL BRIEF FILED			
52	10/21/2008	NOTICE OF APPEAL FILED		21	45
51	10/21/2008	REQUEST FOR EXTENSION OF TIME - GRANTED			
50	10/02/2008	MAIL ADVISORY ACTION (PTOL - 303)			
49	09/29/2008	ADVISORY ACTION (PTOL-303)			
47	09/05/2008	DATE FORWARDED TO EXAMINER			
46	08/29/2008	AMENDMENT AFTER FINAL REJECTION			
45	06/30/2008	MAIL FINAL REJECTION (PTOL - 326)			
44	06/23/2008	FINAL REJECTION			
43	04/14/2008	DATE FORWARDED TO EXAMINER			
42	03/11/2008	RESPONSE AFTER NON-FINAL ACTION			
41	12/13/2007	MAIL NON-FINAL REJECTION	86		30
40	12/10/2007	NON-FINAL REJECTION			
39	09/25/2007	DATE FORWARDED TO EXAMINER			
38	09/25/2007	MAIL APPEALS CONF. REOPEN PROSEC.			
37	09/18/2007	PRE-APPEALS CONFERENCE DECISION - REOPEN PROSECUTION			
36	07/12/2007	REQUEST FOR PRE-APPEAL CONFERENCE FILED			
35	07/12/2007	NOTICE OF APPEAL FILED			
34	07/12/2007	REQUEST FOR EXTENSION OF TIME - GRANTED			
33	06/11/2007	MAIL ADVISORY ACTION (PTOL - 303)			
32	06/07/2007	ADVISORY ACTION (PTOL-303)			
31	05/25/2007	DATE FORWARDED TO EXAMINER			
30	05/18/2007	AMENDMENT AFTER FINAL REJECTION		6	28
29	05/18/2007	REQUEST FOR EXTENSION OF TIME - GRANTED			
28	02/12/2007	MAIL FINAL REJECTION (PTOL - 326)			
27	02/05/2007	FINAL REJECTION			
26	11/25/2006	DATE FORWARDED TO EXAMINER			
25	11/08/2006	RESPONSE AFTER NON-FINAL ACTION		7	23
24	11/08/2006	REQUEST FOR EXTENSION OF TIME - GRANTED			

23	08/01/2006	MAIL NON-FINAL REJECTION	427		-1
22	07/24/2006	NON-FINAL REJECTION			
21	02/01/2005	INFORMATION DISCLOSURE STATEMENT CONSIDERED			
20	07/11/2006	CASE DOCKETED TO EXAMINER IN GAU			
19	03/14/2006	IFW TSS PROCESSING BY TECH CENTER COMPLETE			
18	02/01/2005	REFERENCE CAPTURE ON IDS			
17.7	02/01/2005	INFORMATION DISCLOSURE STATEMENT (IDS) FILED			
17	02/01/2005	INFORMATION DISCLOSURE STATEMENT (IDS) FILED			
16	06/08/2005	CORRESPONDENCE ADDRESS CHANGE			
15	06/08/2005	CHANGE IN POWER OF ATTORNEY (MAY INCLUDE ASSOCIATE POA)			
14	09/08/2004	APPLICATION RETURN FROM OIPE			
13	09/08/2004	APPLICATION RETURN TO OIPE			
12	09/02/2004	APPLICATION DISPATCHED FROM OIPE			
11	09/02/2004	APPLICATION IS NOW COMPLETE			
10	08/09/2004	ADDITIONAL APPLICATION FILING FEES			
9	08/09/2004	A STATEMENT BY ONE OR MORE INVENTORS SATISFYING THE REQUIREMENT UNDER 35 USC 115, OATH OF THE APPLIC			
8	08/09/2004	APPLICANT HAS SUBMITTED NEW DRAWINGS TO CORRECT CORRECTED PAPERS PROBLEMS			
7	06/14/2004	NOTICE MAILED--APPLICATION INCOMPLETE--FILING DATE ASSIGNED			
5	05/07/2004	CLEARED BY L&R (LARS)			
4	04/30/2004	REFERRED TO LEVEL 2 (LARS) BY OIPE CSR			
3	04/30/2004	CASE CLASSIFIED BY OIPE			
2	04/08/2004	IFW SCAN & PACR AUTO SECURITY REVIEW			
1	03/31/2004	INITIAL EXAM TEAM NN			

Search Another: Application# Search

EXPLANATION OF PTA CALCULATION

EXPLANATION OF PTE CALCULATION

To go back, right click here and select Back. To go forward, right click here and select Forward. To refresh, right click here and select Refresh.

Back to OASIS | Home page

UNITED STATES PATENT AND TRADEMARK OFFICE

Commissioner for Patents
United States Patent and Trademark Office
P.O. Box 1450
Alexandria, VA 22313-1450
www.uspto.gov

MAILED

JUN 03 2010

OFFICE OF PETITIONS

RADER FISHMAN & GRAUER PLLC
LION BUILDING
1233 20TH STREET N.W., SUITE 501
WASHINGTON DC 20036

In re Patent No. 7,616,860	:	DECISION ON REQUEST FOR
Glassman et al.	:	RECONSIDERATION OF
Issue Date: November 10, 2009	:	PATENT TERM ADJUSTMENT AND
Application No. 10/815,016	:	NOTICE OF INTENT TO ISSUE
Filed: March 31, 2004	:	CERTIFICATE OF CORRECTION
Atty. Docket No. SONY-06700	:	

This is a decision on the petition filed on December 16, 2009, which is being treated as a petition under 37 CFR 1.705(d) requesting reconsideration of the patent term adjustment calculation.

The request for reconsideration of the patent term adjustment calculation is **GRANTED to the extent indicated herein.** The term of the above-identified patent is extended or adjusted by **one thousand eighty-seven (1087) days.**

On December 16, 2009, patentee submitted a petition under 37 CFR 1.705(d) and fee. On May 6, 2010, patentee filed a Request for Recalculation of Patent Term Adjustment in View of *Wyeth*. On May 11, 2010, the Office mailed a decision granting the petition under 37 CFR 1.705(d) to the extent that a certificate of correction would be issued indicating that the term of the patent was extended or adjusted by 887 days. On May 18, 2010, the Office mailed a "DECISION ON REQUEST FOR RECALCULATION OF PATENT TERM ADJUSTMENT IN VIEW OF WYETH AND NOTICE OF INTENT TO

ISSUE CERTIFICATE OF CORRECTION" indicating that the patent term adjustment had been determined to be 1055 days.

The Office notes that the decisions of May 11, 2010 and May 18, 2010, were issued in error as they accorded patentee less days of patent term adjustment than were warranted. Accordingly, the decisions of May 11, 2010 and May 18, 2010, are withdrawn. The present decision supersedes the decisions mailed on May 11, 2010 and May 18, 2010.

Patentee acknowledges 955 days of delay under 37 CFR 1.702(b), 34 days of applicant delay, and a period of overlap between A delay and B delay. However, patentee incorrectly calculated A delay, B delay and the overlapping period.

As to A delay, it is noted that the Office was incorrectly assessed a period of delay of 43 days, pursuant to 37 CFR 1.702(a)(2), for failure to respond to an appeal taken under 35 U.S.C. 134 not later than four months after the date on which the reply was filed or the appeal was taken.

The phrase the date on which "an appeal was taken" in 35 U.S.C. 154(b)(i)(A)(ii) means the date on which an appeal brief (and not a notice of appeal) was filed. The phrase "appeal brief in compliance with 37 CFR 1.192" requires that: (i) the appeal brief fee (37 CFR 1.17(c)) be paid (37 CFR 1.192(a)); and (2) the appeal brief complies with 37 CFR 1.192(c)(i) through (c)(9). Accordingly, 37 CFR 1.703(a)(4) pertains to the provisions of 35 U.S.C. 154(b)(i)(A)(ii) and specifies that the period of adjustment for Office delay includes the number of days, if any, in the period beginning on the day after the date that is four months after the date an appeal brief in compliance with § 1.192 was filed and ending on the date of mailing of any of an examiner's answer under § 1.193, an action under 35 U.S.C. 132, or a notice of allowance under 35 U.S.C. 151, whichever occurs first.

In this instance, an appeal brief was filed on November 18, 2008. On December 10, 2008, a notification of non-compliant appeal brief was mailed. On December 15, 2008, a corrected appeal brief was filed. On April 30, 2009, a notice of allowance was mailed 4 months and 15 days after the date the

appeal brief in compliance with 37 CFR 1.192 was filed. Thus, a period of adjustment for Office delay pursuant to 37 CFR 1.703(a)(4) of 15 days (not 43 days) is warranted. Accordingly, A delay is 528 days (427 + 86 + 15).

As to B delay, 37 CFR 1.703(b) indicates that the period of adjustment under 37 CFR 1.702(b) ("over three year period") is the number of days, if any, in the period beginning on the day after the date that is three years after the actual filing date of the application and ending on the date a patent was issued. 35 U.S.C. 154(b)(1)(B). However, 37 CFR 1.703(b) also sets forth the limitations on patent term adjustment specified in 35 U.S.C. 154(b)(1)(B)(i) and (ii). Specifically, 37 CFR 1.703(b)(4)[1] provides that the period of adjustment of the term of a patent shall not include the period equal to the sum of the period of pendency consumed by appellate review under 35 U.S.C. 134, 141, 145, whether successful or unsuccessful (35 U.S.C. 154(b)(1)(B)(ii)).

The Office agrees with patentee that the "over three year period" is 955 days. However, patentee failed to account for the filing of the notices of appeal on July 12, 2007, and October 21, 2008. The Office reminds patentee that the period consumed by appellate review, whether successful or not, is excluded from the calculation of B delay. See 35 U.S.C. 154(b)(1)(B)(ii). In this instance, the total period consumed by appellate review is 347 days (155 days beginning on the date on which the first notice of appeal was filed, July 12, 2007, and ending on the date of the mailing of the non-final Office action, December 13, 2007, plus 192 days beginning on the date on which the second notice of appeal was filed, October 21, 2008, and ending on the date of the mailing of the notice of allowance, April 30, 2009). Thus, B delay is 608 days (955 - 347). Furthermore, the overlapping period between A delay and B delay is 15 days (not 129 days).

---

[1] The number of days, if any, in the period beginning on the date on which a notice of appeal to the Board of Patent Appeals and Interferences was filed under 35 U.S.C. 134 and § 41.31 of this title and ending on the date of the last decision by the Board of Patent Appeals and Interferences or by a Federal court in an appeal under 35 U.S.C. 141 or a civil action under 35 U.S.C. 145, or on the date of mailing of either an action under 35 U.S.C. 132, or a notice of allowance under 35 U.S.C. 151, **whichever occurs first, if the appeal did not result in a decision by the Board of Patent Appeals and Interferences**. 37 CFR 1.703(b) (emphasis added).

Accordingly, the Office has determined that the patent term adjustment for the above identified patent is 1087 days (528 days of A delay + 608 days of B delay - 15 days of overlap - 34 days of applicant delay).

The Office will *sua sponte* issue a certificate of correction. Pursuant to 37 CFR 1.322, the Office will not issue a certificate of correction without first providing assignee or patentee an opportunity to be heard. Accordingly, patentee is given **one (1) month or thirty (30) days**, whichever is longer, from the mail date of this decision to respond. No extensions of time will be granted under § 1.136.

The Office acknowledges the previous submission of the $200.00 fee set forth in 37 CFR 1.18(e). No additional fee is due.

This matter is being referred to the Certificates of Correction Branch for issuance of a certificate of correction. The Office will issue a certificate of correction indicating that the term of the above-identified patent is extended or adjusted by **one thousand eighty-seven (1087) days.**

Telephone inquiries specific to this matter should be directed to the undersigned at (571) 272-3211.

Christina Tartera Donnell

Christina Tartera Donnell
Senior Petitions Attorney
Office of Petitions

Enclosure: Copy of DRAFT Certificate of Correction and Copy of Revised PAIR screen

UNITED STATES PATENT AND TRADEMARK OFFICE

CERTIFICATE OF CORRECTION

PATENT: 7,616,860 B2

DATED: Nov. 10, 2009 **DRAFT**

INVENTOR(S): Glassman et al.

It is certified that error appears in the above-identified patent and that said Letters Patent is hereby corrected as shown below:

On the cover page,

[*] Notice: Subject to any disclaimer, the term of this patent is extended or adjusted under 35 USC 154(b) by 921 days

Delete the phrase "by 921 days" and insert – by 1087 days--

Day : Wednesday

PALM INTRANET

Date: 6/2/2010
Time: 08:50:36

PTA Calculations for Application: 10/815016			
Application Filing Date:	03/31/2004	PTO Delay (PTO):	1123
Issue Date of Patent:	11/10/2009	Three Years:	0
Pre-Issue Petitions:	0	Applicant Delay (APPL):	34
Post-Issue Petitions:	0	Total PTA (days):	1087
PTO Delay Adjustment:	-2		

File Contents History

Number	Date	Contents Description	PTO	APPL	START
88	06/02/2010	ADJUSTMENT OF PTA CALCULATION BY PTO	32		
85	05/13/2010	PETITION DECISION - GRANTED			
84	05/06/2010	PETITION ENTERED			
83	05/11/2010	MAIL-RECORD A PETITION DECISION OF GRANTED FOR PATENT TERM ADJUSTMENT AFTER ISSUE			
82	05/11/2010	RECORD A PETITION DECISION OF GRANTED FOR PATENT TERM ADJUSTMENT AFTER ISSUE			
82	05/11/2010	RECORD A PETITION DECISION OF GRANTED FOR PATENT TERM ADJUSTMENT AFTER ISSUE			
81	05/10/2010	ADJUSTMENT OF PTA CALCULATION BY PTO			
81	05/10/2010	ADJUSTMENT OF PTA CALCULATION BY PTO		34	
80	12/16/2009	PETITION ENTERED			
79	11/10/2009	RECORDATION OF PATENT GRANT MAILED			
78	10/21/2009	ISSUE NOTIFICATION MAILED			
77.5	11/10/2009	PTA 36 MONTHS	610		
77	11/10/2009	PATENT ISSUE DATE USED IN PTA CALCULATION			
76	10/15/2009	EXPORT TO FINAL DATA CAPTURE			
75	10/14/2009	DISPATCH TO FDC			
74	10/08/2009	MAIL-PETITION DECISION - DISMISSED			
73	10/08/2009	PETITION DECISION - DISMISSED			
72	07/29/2009	RESPONSE TO REASONS FOR ALLOWANCE			
71	08/04/2009	APPLICATION IS CONSIDERED READY FOR ISSUE			
70	07/29/2009	ISSUE FEE PAYMENT VERIFIED			
69	07/29/2009	ISSUE FEE PAYMENT RECEIVED			
68	07/10/2009	PETITION ENTERED			

67	06/04/2009	FINISHED INITIAL DATA CAPTURE			
66	05/05/2009	EXPORT TO INITIAL DATA CAPTURE			
65	04/30/2009	MAIL NOTICE OF ALLOWANCE			53
64	04/28/2009	ISSUE REVISION COMPLETED			
63	04/28/2009	DOCUMENT VERIFICATION			
62	04/27/2009	NOTICE OF ALLOWANCE DATA VERIFICATION COMPLETED			
61	04/27/2009	NOTICE OF ALLOWABILITY			
60	01/29/2009	APPEAL BRIEF REVIEW COMPLETE			
59	01/29/2009	DATE FORWARDED TO EXAMINER			
58	12/15/2008	APPEAL BRIEF FILED			
57	12/17/2008	REQUEST FOR REFUND			
56	12/10/2008	NOTICE -- DEFECTIVE APPEAL BRIEF			
55	12/05/2008	APPEAL BRIEF REVIEW COMPLETE			
54	12/05/2008	DATE FORWARDED TO EXAMINER			
53.1	11/18/2008	DEFECTIVE / INCOMPLETE APPEAL BRIEF FILED			
53	11/18/2008	APPEAL BRIEF FILED			
52	10/21/2008	NOTICE OF APPEAL FILED		21	45
51	10/21/2008	REQUEST FOR EXTENSION OF TIME - GRANTED			
50	10/02/2008	MAIL ADVISORY ACTION (PTOL - 303)			
49	09/29/2008	ADVISORY ACTION (PTOL-303)			
47	09/05/2008	DATE FORWARDED TO EXAMINER			
46	08/29/2008	AMENDMENT AFTER FINAL REJECTION			
45	06/30/2008	MAIL FINAL REJECTION (PTOL - 326)			
44	06/23/2008	FINAL REJECTION			
43	04/14/2008	DATE FORWARDED TO EXAMINER			
42	03/11/2008	RESPONSE AFTER NON-FINAL ACTION			
41	12/13/2007	MAIL NON-FINAL REJECTION	86		30
40	12/10/2007	NON-FINAL REJECTION			
39	09/25/2007	DATE FORWARDED TO EXAMINER			
38	09/25/2007	MAIL APPEALS CONF. REOPEN PROSEC.			
37	09/18/2007	PRE-APPEALS CONFERENCE DECISION - REOPEN PROSECUTION			
36	07/12/2007	REQUEST FOR PRE-APPEAL CONFERENCE FILED			
35	07/12/2007	NOTICE OF APPEAL FILED			
		REQUEST FOR EXTENSION OF TIME - GRANTED			

34	07/12/2007				
33	06/11/2007	MAIL ADVISORY ACTION (PTOL - 303)			
32	06/07/2007	ADVISORY ACTION (PTOL-303)			
31	05/25/2007	DATE FORWARDED TO EXAMINER			
30	05/18/2007	AMENDMENT AFTER FINAL REJECTION		6	28
29	05/18/2007	REQUEST FOR EXTENSION OF TIME - GRANTED			
28	02/12/2007	MAIL FINAL REJECTION (PTOL - 326)			
27	02/05/2007	FINAL REJECTION			
26	11/25/2006	DATE FORWARDED TO EXAMINER			
25	11/08/2006	RESPONSE AFTER NON-FINAL ACTION		7	23
24	11/08/2006	REQUEST FOR EXTENSION OF TIME - GRANTED			
23	08/01/2006	MAIL NON-FINAL REJECTION	427		-1
22	07/24/2006	NON-FINAL REJECTION			
21	02/01/2005	INFORMATION DISCLOSURE STATEMENT CONSIDERED			
20	07/11/2006	CASE DOCKETED TO EXAMINER IN GAU			
19	03/14/2006	IFW TSS PROCESSING BY TECH CENTER COMPLETE			
18	02/01/2005	REFERENCE CAPTURE ON IDS			
17.7	02/01/2005	INFORMATION DISCLOSURE STATEMENT (IDS) FILED			
17	02/01/2005	INFORMATION DISCLOSURE STATEMENT (IDS) FILED			
16	06/08/2005	CORRESPONDENCE ADDRESS CHANGE			
15	06/08/2005	CHANGE IN POWER OF ATTORNEY (MAY INCLUDE ASSOCIATE POA)			
14	09/08/2004	APPLICATION RETURN FROM OIPE			
13	09/08/2004	APPLICATION RETURN TO OIPE			
12	09/02/2004	APPLICATION DISPATCHED FROM OIPE			
11	09/02/2004	APPLICATION IS NOW COMPLETE			
10	08/09/2004	ADDITIONAL APPLICATION FILING FEES			
9	08/09/2004	A STATEMENT BY ONE OR MORE INVENTORS SATISFYING THE REQUIREMENT UNDER 35 USC 115, OATH OF THE APPLIC			
8	08/09/2004	APPLICANT HAS SUBMITTED NEW DRAWINGS TO CORRECT CORRECTED PAPERS PROBLEMS			
7	06/14/2004	NOTICE MAILED--APPLICATION INCOMPLETE--FILING DATE ASSIGNED			

5	05/07/2004	CLEARED BY L&R (LARS)			
4	04/30/2004	REFERRED TO LEVEL 2 (LARS) BY OIPE CSR			
3	04/30/2004	CASE CLASSIFIED BY OIPE			
2	04/08/2004	IFW SCAN & PACR AUTO SECURITY REVIEW			
1	03/31/2004	INITIAL EXAM TEAM NN			

Search Another: Application# Search

EXPLANATION OF PTA CALCULATION

EXPLANATION OF PTE CALCULATION

To go back, right click here and select Back. To go forward, right click here and select Forward. To refresh, right click here and select Refresh.

Back to OASIS | Home page

UNITED STATES PATENT AND TRADEMARK OFFICE

Commissioner for Patents
United States Patent and Trademark Office
P.O. Box 1450
Alexandria, VA 22313-1450
www.uspto.gov

MAILED FROM DIRECTORS OFFICE
OCT 25 2006
TECHNOLOGY CENTER 2800

October 2006

Dr. M. Anandan
13009 Thome Valley Dr.
Del Valle TX 78617

In re Application of:
ANANDAN et al.
Serial No.: 10/815,020
Filed: March 31, 2004
Attorney Docket No.: **OLIT1100**

SUA SPONTE
DECISION WITHDRAWING HOLDING OF ABANDONMENT

This is a decision, *sua sponte*, withdrawing the holding of abandonment of the above-identified application.

The application was held abandoned for failure of the examiner to consider the response filed August 2, 2005 as a bona fide attempt at a proper reply to the non-final Office action mailed June 15, 2005.

A review of the written record indicates that the response addresses the objections and rejections of the Office action. The response also makes reference to specific claim amendments, although the claims were not amended.

> MPEP 714.03 states where an amendment substantially responds to the rejections, objections, or requirements in a non-final Office action (and is a bona fide attempt to advance the application to final action) but contains ... a serious deficiency (e.g., the amendment is unsigned or does not appear to have been filed in reply to the non-final Office action), the examiner should if there is insufficient time remaining, issue an Office action setting a 1-month time period to complete the reply pursuant to 37 CFR 1.135(c).

For the above stated reason, the Notice of Abandonment is hereby vacated and the holding of abandonment withdrawn. The application is restored to pending status.

The application file is being forwarded to the examiner for consideration of the response.

Inquiries related to this decision should be directed to Jose' G. Dees at (571) 272-1569.

Janice Falcone, Director, Technology Center 2800
Semiconductors, Electrical and Optical
Systems and Components

UNITED STATES PATENT AND TRADEMARK OFFICE

Commissioner for Patents
United States Patent and Trademark Office
P.O. Box 1450
Alexandria, VA 22313-1450
www.uspto.gov

COPY MAILED

NOV 22 2006

OFFICE OF PETITIONS

ALLEN J. OH
MOORE & HANSEN, PLLP
225 SOUTH SIXTH ST
MINNEAPOLIS MN 55402

In re Application of Sachin Govind Deshpande Application No. 10/815,029 Filed: March 31, 2004 Attorney Docket No. SLA1488	: : : : :	DECISION ON REQUEST TO WITHDRAW FROM RECORD

This is a decision on the Request to Withdraw as attorney or agent of record under 37 CFR § 1.36(b), filed August 19, 2006.

The request is **NOT APPROVED**.

A review of the record shows that Allen J. Oh, signed the request on behalf of all attorneys or agents of record who are associated with Customer No. 22854. It is also noted that Allen J. Oh filed a change of correspondence address to the address associated with Customer No. 22854 on February 28, 2005. However, Allen J. Oh does not have power of attorney in this patent application nor is there any statement or evidence of record of employment in or otherwise being engaged in the proceedings in this patent application. Accordingly, the request to withdraw under 37 C.F.R. § 1.36(b), as well as any request to change the correspondence address is not appropriate.

The present request to change the correspondence of record will not be processed, especially since the requested correspondence address is not that of: (1) the first named signing inventor, or (2) the intervening assignee of the entire interest. Further, since the request to change the correspondence address filed February 28, 2005 was processed in error, all future communications from the Office will be redirected to the first copied address below until otherwise properly notified by the applicant.

There is no outstanding Office action that requires a reply from the applicant.

Telephone inquiries concerning this decision should be directed to Sherry D. Brinkley at 571-272- 3204.

Sherry D. Brinkley
Petitions Examiner
Office of Petitions

cc: Gerald W. Maliszewski
P.O. Box 270829
San Diego, CA 92198-2829

MacArthur Investments, LLP
c/o Andrea-Marie Jacobson
4456 Parklawn Court, #306
Edina, MN 55435

SPE RESPONSE FOR CERTIFICATE OF CORRECTION

Paper No.: _____

DATE : 2/24/09

TO SPE OF : ART UNIT 2624

SUBJECT : Request for Certificate of Correction for Appl. No.: 10815029 Patent No.: 7471845 B2

Please respond to this request for a certificate of correction within 7 days.

FOR IFW FILES:

Please review the requested changes/corrections as shown in the **COCIN** document(s) in the IFW application image. No new matter should be introduced, nor should the scope or meaning of the claims be changed.

Please complete the response (see below) and forward the completed response to scanning using document code **COCX**.

FOR PAPER FILES:

Please review the requested changes/corrections as shown in the attached certificate of correction. Please complete this form (see below) and forward it with the file to:

Certificates of Correction Branch (CofC)
South Tower - 9A22
Palm Location 7580
[redacted]

LAMONTE NEWSOME
Certificates of Correction Branch
703-308-9390 ext. 112

Thank You For Your Assistance

The request for issuing the above-identified correction(s) is hereby:
Note your decision on the appropriate box.

- ☑ **Approved** — **All** changes apply.
- ☐ **Approved in Part** — Specify below which changes **do not** apply.
- ☐ **Denied** — State the reasons for denial below.

Comments: _____

3/18/09

BRIAN WHITNER
SUPERVISORY PATENT EXAMINER

UNITED STATES PATENT AND TRADEMARK OFFICE

UNITED STATES DEPARTMENT OF COMMERCE
United States Patent and Trademark Office
Address: COMMISSIONER FOR PATENTS
P.O. Box 1450
Alexandria, Virginia 22313-1450
www.uspto.gov

TEXAS INSTRUMENTS INCORPORATED
P O BOX 655474, M/S 3999
DALLAS, TX 75265

Mail Date: 04/20/2010

Applicant	: Krishnasamy Anandakumar	: DECISION ON REQUEST FOR
Patent Number	: 7574351	: RECALCULATION of PATENT
Issue Date	: 08/11/2009	: TERM ADJUSTMENT IN VIEW
Appliction No	: 10/815,044	: OF WYETH AND NOTICE OF INTENT TO
Filed	: 03/30/2004	: ISSUE CERTIFICATE OF CORRECTION
		:

The Request for Recalculation is **GRANTED** to the extent indicated.

The patent term adjustment has been determined to be **1506** days. The USPTO will *sua sponte* issue a certificate of correction reflecting the amount of PTA days determined by the recalculation.

Prior to the issuance of the certificate of correction, the USPTO will afford patentee an opportunity to be heard and request reconsideration. Accordingly, patentee has **one month or thirty (30) days**, whichever is longer, to file a request for reconsideration of this patent term adjustment calculation. See 35 U.S.C. 154(b)(3)(B)(ii) and 37 CFR 1.322(a)(4). No extensions of time will be granted under 37 CFR 1.136.

Patentee should use document code PET.OP if electronically filing a request for reconsideration of this patent term adjustment calculation. The patentee must also include the information required by 37 CFR 1.705(b)(2) and the fee required by 37 CFR 1.18(e). If patentee does not file a timely request for reconsideration of this patent term adjustment calculation including the information required by 37 CFR 1.705(b)(2) and the fee required by 37 CFR 1.18(e), the USPTO will issue a certificate of correction reflecting the PTA determination noted above.

Patentee should be aware that in order to preserve the right to review in the United States District Court for the District of Columbia of the USPTO patent term adjustment determination, patentee must ensure that he or she also take the steps required under 35 U.S.C. 154(b)(4)(A) in a timely manner. Nothing in the request for recalculation should be construed as providing an alternative time frame for commencing a civil action under 35 U.S.C. 154(b)(4)(A).

Any questions concerning this decision should be directed to the Office of Patent Legal Administration at 571-272-7702.

UNITED STATES PATENT AND TRADEMARK OFFICE

10-16-06

Commissioner for Patents
United States Patent and Trademark Office
P.O. Box 1450
Alexandria, VA 22313-1450
www.uspto.gov

Patent No. : 7,031,056
Inventor(s) : Katja Peter, et.al.
Issued : April 18, 2006
Docket No. : RECP:110us

Re: Request for Certificate of Correction

Consideration has been given your request for the issuance of a certificate of correction for the above-identified patent under the provisions of 37 CFR 1.322 and/or 1.323.

Assignees' names and addresses (assignment data) printed in a patent are based *solely* on information supplied in the appropriate space for identifying the assignment data, i.e., item 3 of the Fee(s) Transmittal Form PTOL-85B. After payment of the issue fee, correction of assignment data submitted on the PTOL-85B can only be done by Certificate of Correction under 37 CFR 1.323, with a request under 37 CFR 3.81(b).

A request for a patent to be corrected to state the name of the assignee must:

A. state that the assignment was submitted for recordation as set forth in 37 CFR 3.11 before issuance of the patent;
B. include a request for a certificate of correction under 37 CFR 1.323 along with the fee set forth in 37 CFR 1.20(a); and
C. include the processing fee set forth in 37 CFR 1.17(i).

If the request is granted, Certificates of Correction Branch will be notified that a Certificate of Correction may be issued.
See Manual of Patent Examining Procedure, Section 1481.01 (Rev. 3) (Oct. 2005).

Applicant has not included items A and or C above, accordingly, the request for Certificate of Correction to add or change the assignee data is dismissed.
Any request under 37 CFR 3.81(b) should be directed to the following address or facsimile number:

By mail: Mail Stop PETITIONS
Commissioner for Patents
Post Office Box 1450
Alexandria, VA 22313-1450

By hand: Customer Service Window
Mail Stop Petitions
Randolph Building
401 Dulany Street
Alexandria, VA 22314

By fax: 571-273-8300
ATTN: Office of Petitions

If a fee (currently $100) was previously submitted for consideration of a Request for Certificate of Correction, under CFR 1.323, to correct assignment data, no additional fee is required.

In view of the foregoing, your request is hereby denied.

Eva James
For Cecelia Newman
Decisions & Certificates
of Correction Branch
(703) **308-9390 ext. 124** or (703) 305-8309

Michael L. Dunn
Simpson & Simpson
5555 Main Street
Williamsville, New York, 14221

ej

UNITED STATES PATENT AND TRADEMARK OFFICE

Commissioner for Patents
United States Patent and Trademark Office
P.O. Box 1450
Alexandria, VA 22313-1450
www.uspto.gov

Paper No. 040105

Johnathan M. Waldman
Woodcock Washburn LLP
One Liberty Place 46th Floor
Philadelphia, PA 19103

Appl No.: 10/815,067	:	
Inv: Young et al.	:	**DECISION ON PETITION**
Filed: March 31, 2004	:	**UNDER** *37 CFR 1.48(a)*
For: GRID CANVAS	:	

This is a decision on the applicant's "Petition to Correct And/Or Add to Originally Named Inventors to an Application" filed under 37 CFR 1.48(a) filed March 15, 2005. The applicant requests that the names of Jessica Lynn Fosler, Daniel Ryan Lehenbauer, Jian Yuan and Jeffrey Thomas Chrisope be added to the list of inventors as originally filed, namely, Kenneth Lawrence Young, Oleg V. Ovetchkine, Dimitry G. Titov, Peter Faraday and Kenneth Cooper.

After a careful review of the file and applicant having satisfied all of the requirements of 37 CFR 1.48(a), the petition is hereby **granted**.

The patented file is being forwarded to TC 2800 Tech Support for updating the PALM system for the newly added inventors; whereupon, it will then be returned to the Patent Corps for examination.

Matthew S. Smith

Supervisory Primary Examiner AU 2825

Technology Center 2800

MATTHEW SMITH
SUPERVISORY PATENT EXAMINER
TECHNOLOGY CENTER 2800

UNITED STATES PATENT AND TRADEMARK OFFICE

Commissioner for Patents
United States Patent and Trademark Office
P.O. Box 1450
Alexandria, VA 22313-1450
www.uspto.gov

Patent Department – 53051
Kilpatrick Stockton LLP
1001 West Fourth Street
Winston-Salem, NC 27101

MAILED

AUG 23 2005

Technology Center 2100

In re Application of:
Stephen Lawrence, et al.
Application No. 10/815,071
Filed: March 31, 2004
For: METHODS AND SYSTEMS FOR STRUCTURING EVENT DATA IN A DATABASE FOR LOCATION AND RETRIEVAL

DECISION ON REQUEST TO WITHDRAW AS ATTORNEY OR AGENT

This is a decision on the Request For Withdrawal As Attorney Under 37 CFR § 1.36 and 10.40(c) filed March 10, 2005.

A Revocation and Substitution Of Power Of Attorney Under 37 CFR § 1.36 was filed on April 20, 2005. The Power Of Attorney revoked all prior Powers Of Attorney and appointed Fenwick & West, LLP as the attorneys of record of the instant application. The Power Of Attorney of April 20, 2005 was accepted. Accordingly, all communications from the U.S. Patent and Trademark Office to applicant are to be conducted by Fenwick & West, LLP.

For the above stated reasons, the request is **DISMISSED AS MOOT**.

No further communication to you regarding this application will be made.

For Vincent N. Trans
Special Program Examiner
Technology Center 2100
Computer Architecture, Software, and Information Security
571-272-3613

cc: Fenwick & West LLP
Silicon Valley Center
801 California Street
Mountain View, CA 94041

UNITED STATES PATENT AND TRADEMARK OFFICE

Commissioner for Patents
United States Patent and Trademark Office
P.O. Box 1450
Alexandria, VA 22313-1450
www.uspto.gov

Patent Department – 53051
Kilpatrick Stockton LLP
1001 West Fourth Street
Winston-Salem, NC 27101

MAILED

AUG 2 6 2005

Technology Center 2100

In re Application of:
Stephen LAWRENCE, et al.
Application No. 10/815,074
Filed: March 31, 2004
For: SYSTEMS AND METHODS FOR WEIGHTING A SEARCH QUERY RESULT

DECISION ON REQUEST TO WITHDRAW AS ATTORNEY OR AGENT

This is a decision on the Request For Withdrawal As Attorney Under 37 CFR § 1.36 and 10.40(c) filed March 10, 2005.

A Revocation and Substitution Of Power Of Attorney Under 37 CFR § 1.36 was filed on April 20, 2005. The Power Of Attorney revoked all prior Powers Of Attorney and appointed Fenwick & West, LLP as the attorneys of record of the instant application. The Power Of Attorney of April 20, 2005 was accepted. Accordingly, all communications from the U.S. Patent and Trademark Office to applicant are to be conducted by Fenwick & West, LLP.

For the above stated reasons, the request is **DISMISSED AS MOOT**.

No further communication to you regarding this application will be made.

For Vincent N. Trans
Special Program Examiner
Technology Center 2100
Computer Architecture, Software, and Information Security
571-272-3613

cc: Fenwick & West LLP
Silicon Valley Center
801 California Street
Mountain View, CA 94041

UNITED STATES PATENT AND TRADEMARK OFFICE

Commissioner for Patents
United States Patent and Trademark Office
P.O. Box 1450
Alexandria, VA 22313-1450
www.uspto.gov

RICHARD F. LEMUTH
SHELL OIL COMPANY
INTELLECTUAL PROPERTY SERVICES
P.O. BOX 2463
HOUSTON, TX 77252-2463

COPY MAILED

APR 0 7 2005

OFFICE OF PETITIONS

In re Application of	:
Marek Matusz et al	:DECISION ON PETITION
Application No. 10/815,089	:UNDER 37 CFR 1.78(a)(6)
Filed: March 31, 2004	:
Attorney Docket No. TH-1657 (US)	:

This is a decision on the petition filed December 22, 2004, which is being treated under 37 CFR § 1.78(a)(6), to accept an unintentionally delayed claim under 35 U.S.C. § 119(e) for the benefit of a prior-filed provisional Application No. 60/459,136, filed March 31, 2003, as set forth in the concurrently filed amendment.

The petition is **DISMISSED AS MOOT**.

A petition under 37 CFR § 1.78(a)(6) is only applicable to those applications filed on or after November 29, 2000.

Along with the instant petition under 37 CFR § 1.78(a)(6), petitioner has submitted an amendment to the first sentence of the specification following the title to include a reference to the prior-filed application.

The instant pending nonprovisional application was filed on March 31, 2004, and was pending at the time of filing of the instant petition. Reference to the prior-filed application was made in the transmittal letter filed with the instant application.

The current procedure where a claim for priority under 37 CFR 1.78(a)(6) is not included in the first sentence of the specification or in an ADS but does appear either in the oath or declaration or a transmittal letter filed with the application and the Office notes the claim for priority, no petition will be required to accept a late claim for priority. This is because the application would have been scheduled for publication on the basis of the information concerning the claim submitted elsewhere in the application within the time period set forth in 37 CFR § 1.78(a)(5)(ii). However, on the other hand, if the USPTO does not note the claim for priority to the prior-filed application(s) set forth in the oath or declaration or transmittal letter submitted with the application, a petition will be required to accept a late claim for priority under 37 CFR §1.78(a)(6).[1] In the instant case, the Office noted the claim for priority of the above-noted, prior-filed application in the transmittal letter filed with the application, as shown by its inclusion on the filing receipt.

---

[1] *Note* MPEP 201.11 (V), page 200-75 (Rev. 1. Feb. 2004 and 66 Federal Register 67087 at 67089 (Dec. 28, 2001), effective December 28, 2001.

In view of the above, the $1,370 petition fee submitted is unnecessary and will be credited to petitioner's deposit account in due course.

Any questions concerning this decision on petition may be directed to Wan Laymon at (571) 272-3220. All other inquiries concerning either the examination procedures or status of the application should be directed to the Technology Center.

This matter is being referred to the Examiner of Technology Center AU 1625 for appropriate action on the amendment filed December 22, 2004, including consideration of the claim under 35 U.S.C. § 119(e) for the benefit of priority to prior-filed provisional Application No. 60/459,136.

Frances Hicks

Frances Hicks
Lead Petitions Examiner
Office of Petitions
Office of the Deputy Commissioner
for Patent Examination Policy

UNITED STATES PATENT AND TRADEMARK OFFICE

Commissioner for Patents
United States Patent and Trademark Office
P.O. Box 1450
Alexandria, VA 22313-1450
www.uspto.gov

David I. Roche
Baker & McKenzie, LLP
130 E. Randolph Drive
Chicago, IL 60601

COPY MAILED

APR 2 6 2007

OFFICE OF PETITIONS

In re Application of:
LIU, et al.
Application No.: 10/815,091
Filed: March 31, 2004
Atty's Docket No.: TEK-002005

DECISION ON PETITION UNDER
37 CFR 1.137(b)

This is a decision on the petition for revival of the above-entitled application under 37 CFR 1.137(b), filed November 24, 2006.

The petition is **GRANTED**.

The above-identified application became abandoned for failure to submit the issue and publication fees in a timely manner in reply to the Notice Of Allowance mailed August 16, 2006, which set a statutory period for reply of three (3) months. Accordingly, the above-identified application became abandoned at midnight on November 16, 2006.

On November 24, 2006, applicant filed the petition for revival under 37 CFR 1.137(b) considered herein. The petition satisfies the conditions for revival pursuant to the provisions of 37 CFR 1.137(b) in that it includes: (1) the petition fee; (2) the required statement of unintentional delay; and (3) the required reply in the form of payment of the issue and publication fees. Accordingly, the issue and publication fee payments are accepted as having been unintentionally delayed.

The petition to revive filed 22 January 2007 is dismissed as moot and the $750.00 petition fee will be credited to deposit account number 02-0400.

The application is being referred to the Office Of Publications.

Telephone inquiries concerning this decision should be directed to the undersigned.

Derek A. Putonen
Attorney Advisor
(571) 272-3294

UNITED STATES PATENT AND TRADEMARK OFFICE

Commissioner for Patents
United States Patent and Trademark Office
P.O. Box 1450
Alexandria, VA 22313-1450
www.uspto.gov

LEFEVOUR LAW GROUP, LLC
4365 LAWN AVE, SUITE 5
WESTERN SPRINGS IL 60558

COPY MAILED
OCT 1 0 2006
OFFICE OF PETITIONS

In re Application of
JACOBSON
Application No. 10/815,092
Filed: March 31, 2004
Attorney Docket No. 065426.0002

DECISION ON PETITION
TO WITHDRAW
FROM RECORD

This is a decision on the Request to Withdraw as attorney or agent of record under 37 C.F.R. § 1.36(b), filed May 30, 2006.

The request is **NOT APPROVED**.

A grantable request to withdraw as attorney/agent of record must be signed by every attorney/agent seeking to withdraw or contain a clear indication that one attorney is signing on behalf of another/others. A request to withdraw will not be approved unless at least 30 (thirty) days would remain between the date of approval and the later of the expiration date of a time to file a response or the expiration date of the maximum time period which can be extended under 37 C.F.R. § 1.136(a).

The Office cannot approve the request at this time since the reasons provided do not meet any of the conditions under the mandatory or permissive categories enumerated in 37 CFR 10.40. Section 10.40 of Title 37 of the Code of Federal Regulation states, "[a] practitioner shall not withdraw from employment in a proceeding before the Office without permission from the Office[.]" More specifically, 37 CFR 10.40 states, "[i]f paragraph (b) of this section is not applicable, a practitioner may not request permission to withdraw in matter pending before the Office unless such request or such withdrawal is" for one the permissive reasons listed in 37 CFR 10.40(c). The reasons set forth in the request, "Firm no longer represents applicant..." does not meet any of the conditions set forth in 37 CFR 10.40.

In order to request or take action in a patent matter, the assignee must establish its ownership of the patent to the satisfaction of the Director. In this regard, a Statement under 37 CFR 3.73(b) must have either: (i) documentary evidence of a chain of title from the original owner to the assignee (*e.g.*, copy of an executed assignment), and a statement affirming that the documentary evidence of the chain of title from the original owner to the assignee was or concurrently is being

submitted for recordation pursuant to § 3.11; or (ii) a statement specifying where documentary evidence of a chain of title from the original owner to the assignee is recorded in the assignment records of the Office (*e.g.*, reel and frame number). The power of attorney filed on August 24, 2006 included an improper or invalid 37 CFR 3.73(b) statement. The Notice Regarding Change Of Power Of Attorney mailed September 12, 2006 is hereby **VACATED**.

All future communications from the Office will continue to be directed to the above-listed address until otherwise notified by applicant.

Telephone inquiries concerning this decision should be directed to Monica A. Graves at 571-272-7253.

Amelia Au
Petitions Examiner
Office of Petitions

cc: **Andrea-Marie Jacobson**
300 Hunterdon Court, Unit 300
Schaumburg, IL 60194

cc: **Dykema Gossett PLLC**
10 S. Wacker Drive, Suite 2300
Chicago, IL 60606

SPE RESPONSE FOR CERTIFICATE OF CORRECTION

Paper No.: _____

DATE : 11-9-07

TO SPE OF : Technology Center 2134 10/815092

SUBJECT : Request for Certificate of Correction on Patent No.: 7231606 B2

A response is requested with respect to the accompanying request for a certificate of correction.

Please complete this form and return with file, within 7 days to:
Palm location **7580, Certificates of Correction Branch – South Tower – 9A22**
If response is for an IFW, **return to employee (named below) via PUBSCofC Team in MADRAS.**
With respect to the change(s) requested, correcting Office and/or Applicant's errors, should the patent read as shown in the certificate of correction (COCIN)? No new matter should be introduced, nor should the scope or meaning of the claims be changed.

Thank You For Your Assistance

Elisha Evans
Certificates of Correction Branch
Tel. No. 703-308-9390 EXT 110

The request for issuing the above-identified correction(s) is hereby:
Note your decision on the appropriate box.

- ☐ **Approved** — **All** changes apply.
- ☐ **Approved in Part** — Specify below which changes **do not** apply.
- ☒ **Denied** — State the reasons for denial below.

Comments:

1) An amendment containing a specific reference to the earlier filed application has not been submitted nor was such a reference submitted during the pendency of the application.
2) A grantable petition to accept an unintentionally delayed claim for benefit of the earlier prior application must be filed, including surcharge 37CFR 1.17(t)

GILBERTO BARRON
SUPERVISORY PATENT EXAMINER
TECHNOLOGY CENTER 2100

Gilberto Barron Jr
GILBERTO BARRON JR
SUPERVISORY PATENT EXAMINER
TECHNOLOGY CENTER 2100

2132
Art Unit

UNITED STATES PATENT AND TRADEMARK OFFICE

Commissioner for Patents
United States Patent and Trademark Office
P.O. Box 1450
Alexandria, VA 22313-1450
www.uspto.gov

12/27/07

Patent No. : 7231668 B2
Ser. No. : 10/815092
Inventor(s) : Jacobson
Issued : June 12, 2007
Title : **NETWORK POLICY MANAGEMENT AND EFFECTIVENESS SYSTEM**
Docket No. : 065426.0002

Re: Request for Certificate of Correction

Consideration has been given your request for the issuance of a certificate of correction for the above-identified patent.

An amendment containing a specific reference to the earlier filed application has not been submitted nor was such a reference submitted during the pendency of the application.

A grantable petition to accept on unintentionally claim for benefit of the prior application must be filed, including surcharge 37 CFR 1.17 (e).

In view of the foregoing, your request is hereby **denied**.

Elisha Evans
For Cecelia Newman, Supervisor
Decisions & Certificates
of Correction Branch
(703) 308-9390 ext. 110

DYKEMA GOSSETT PLLC
10 S. WACKER DR., STE. 2300
CHICAGO IL 60606

CBN/eme

UNITED STATES PATENT AND TRADEMARK OFFICE

Commissioner for Patents
United States Patent and Trademark Office
P.O. Box 1450
Alexandria, VA 22313-1450
www.uspto.gov

DYKEMA GOSSETT PLLC
10 S. WACKER DR., STE. 2300
CHICAGO IL 60606

COPY MAILED

SEP 2 5 2008

OFFICE OF PETITIONS

In re Patent No. 7,231,668
Issue Date: June 12, 2007
Application No. 10/815,092
Filed: March 31, 2004
Attorney Docket No. 065426.0002

: DECISION ON PETITION
: UNDER 37 CFR 1.78(a)(3)

This is a decision on the petition filed July 22, 2008, to accept an unintentionally delayed claim. The petition is being treated under 37 CFR 1.78(a)(3) and 35 U.S.C. §120 for the benefit of priority to prior-filed nonprovisional Application No. 09/104,946, filed June 25, 1998, by way of a certificate of correction filed concurrently herewith.

The petition is **GRANTED**.

A petition for acceptance of a claim for late priority under 37 CFR 1.78(a)(3) is only applicable to those applications filed on or after November 29, 2000. Further, the petition is appropriate only after the expiration of the period specified in 37 CFR 1.78(a)(2)(ii). In addition, the petition under 37 CFR 1.78(a)(3) must be accompanied by:

(1) the reference required by 35 U.S.C. § 120 and 37 CFR 1.78(a)(2)(i) of the prior-filed application, unless previously submitted;
(2) the surcharge set forth in § 1.17(t); and
(3) a statement that the entire delay between the date the claim was due under 37 CFR 1.78(a)(2)(ii) and the date the claim was filed was unintentional. The Commissioner may require additional information where there is a question whether the delay was unintentional.

Application no. 10/815,092 which was filed after November 29, 2000, matured into Patent No. 7,231,668 on June 12, 2007. The claim for the benefit of priority to a prior-filed nonprovisional application was submitted after expiration of the period specified in 37 CFR 1.78(a)(2)(ii). Therefore, this is a proper petition under 37 CFR 1.78(a)(3).

The petition complies with the requirements for a grantable petition under 37 CFR

1.78(a)(3) in that (1) a reference to the above-noted, prior-filed nonprovisional application has been included in a certificate of correction, as provided by 37 CFR 1.78(a)(2)(iii); (2) the surcharge fee required by 37 CFR 1.17(t) has been submitted; and (3) the petition contains a proper statement of unintentional delay. Accordingly, having found that the instant petition for acceptance of an unintentionally delayed claim for the benefit of priority under 35 U.S.C. § 120 to the above-noted, prior-filed nonprovisional applications satisfies the conditions of 37 CFR 1.78(a)(3), the petition is granted.

Petitioner's deposit account no. 04-2223 has been charged for the petition fee and the certificate of correction fee.

This application is being forwarded to the Certificates of Corrections branch for an issuance of a certificate of correction noting the priority claim to prior filed application 09/104,946 filed June 25, 1998, which matured into Patent No. 6,735,701 on May 11, 2004.

Any questions concerning this matter may be directed to Senior Petitions Attorney Patricia Faison-Ball at (571) 272-3212. Any questions regarding the Certificate of Correction should be directed to the Certificates of Correction Branch at (703) 305-8309.

Anthony Knight
Supervisor
Office of Petitions

UNITED STATES PATENT AND TRADEMARK OFFICE

UNITED STATES DEPARTMENT OF COMMERCE
United States Patent and Trademark Office
Address: COMMISSIONER FOR PATENTS
P.O. Box 1450
Alexandria, Virginia 22313-1450
www.uspto.gov

MENDELSOHN, DRUCKER, & ASSOCIATES, P.C.
1500 JOHN F. KENNEDY BLVD., SUITE 405
PHILADELPHIA, PA 19102

Mail Date: 07/06/2010

Applicant	: Gary W. Atkinson	: DECISION ON REQUEST FOR
Patent Number	: 7643408	: RECALCULATION of PATENT
Issue Date	: 01/05/2010	: TERM ADJUSTMENT IN VIEW
Application No	: 10/815,123	: OF WYETH AND NOTICE OF INTENT TO
Filed	: 03/31/2004	: ISSUE CERTIFICATE OF CORRECTION
		:

The Request for Recalculation is **GRANTED** to the extent indicated.

The patent term adjustment has been determined to be **1435** days. The USPTO will *sua sponte* issue a certificate of correction reflecting the amount of PTA days determined by the recalculation.

Prior to the issuance of the certificate of correction, the USPTO will afford patentee an opportunity to be heard and request reconsideration. Accordingly, patentee has **one month or thirty (30) days**, whichever is longer, to file a request for reconsideration of this patent term adjustment calculation. See 35 U.S.C. 154(b)(3)(B)(ii) and 37 CFR 1.322(a)(4). No extensions of time will be granted under 37 CFR 1.136.

Patentee should use document code PET.OP if electronically filing a request for reconsideration of this patent term adjustment calculation. The patentee must also include the information required by 37 CFR 1.705(b)(2) and the fee required by 37 CFR 1.18(e). If patentee does not file a timely request for reconsideration of this patent term adjustment calculation including the information required by 37 CFR 1.705(b)(2) and the fee required by 37 CFR 1.18(e), the USPTO will issue a certificate of correction reflecting the PTA determination noted above.

Patentee should be aware that in order to preserve the right to review in the United States District Court for the District of Columbia of the USPTO patent term adjustment determination, patentee must ensure that he or she also take the steps required under 35 U.S.C. 154(b)(4)(A) in a timely manner. Nothing in the request for recalculation should be construed as providing an alternative time frame for commencing a civil action under 35 U.S.C. 154(b)(4)(A).

Any questions concerning this decision should be directed to the Office of Patent Legal Administration at 571-272-7702.

UNITED STATES PATENT AND TRADEMARK OFFICE

Commissioner for Patents
United States Patent and Trademark Office
P.O. Box 1450
Alexandria, VA 22313-1450
www.uspto.gov

COOLEY GODWARD KRONISH LLP
ATTN: PATENT GROUP
THE BOWEN BUILDING
875 15TH STREET, N.W. SUITE 800
WASHINGTON, DC 20005-2221

COPY MAILED

OCT 23 2006

OFFICE OF PETITIONS

In re Application of	:	
CARTER, et al.	:	
Application No. 10/815,124	:	DECISION ON PETITION
Filed: March 31, 2004	:	TO WITHDRAW
Attorney Docket No. AE2003-074	:	FROM RECORD
	:	

This is a decision on the Request to Withdraw as attorney or agent under 37 C.F.R. § 1.36(b) or 37 C.F.R. § 10.40 filed June 27, 2006.

The request is **NOT APPROVED**.

A review of the file record indicates that Sean R. O'Dowd does not have power of attorney in this patent application nor is there any statement or evidence of record of employment in or otherwise being engaged in the proceedings in this patent application. Accordingly, the request to withdraw under 37 C.F.R. § 1.36(b) is not applicable.

The request to change the correspondence of record is not acceptable as the requested correspondence address is not that of: (1) the first named signing inventor; or (2) the intervening assignee of the entire interest. The change of address submitted on August 4, 2006 is also not acceptable because Larry Williams is not an attorney of record. See 37 CFR 1.33(a)(2).

All future communications from the Office will continue to be directed to the first address listed below until otherwise properly notified by the applicant.

Telephone inquires concerning this decision should be directed to Monica A. Graves at 571-272-7253.

David Bucci
Petitions Examiner
Office of Petitions

cc: **JOHN D. PIRNOT**
ADVANCED ENERGY INDUSTRIES, INC.
1625 SHARP POINT DR.
FORT COLLINS CO 80525

cc: **Larry Williams, Ph.D**
3945 Montgomery Drive
Santa Rosa, CA 95405-5212

UNITED STATES PATENT AND TRADEMARK OFFICE

Commissioner for Patents
United States Patent and Trademark Office
P.O. Box 1450
Alexandria, VA 22313-1450
www.uspto.gov

COPY MAILED

SEP 07 2007

OFFICE OF PETITIONS

SEAGATE TECHNOLOGY c/o MOFO SF
425 MARKET ST.
SAN FRANCISCO CA 94105

In re Application of	:	
Norbert Steven Parsoneault, et al.	:	
Application No. 10/815,130	:	DECISION ON PETITION
Filed: March 31, 2004	:	TO WITHDRAW
Attorney Docket No. SEA/3350	:	FROM RECORD
	:	

This is a decision on the Request to Withdraw as attorney or agent of record under 37 C.F.R. § 1.36(b) filed April 24, 2007.

The request is **DISMISSED** as moot.

A review of the file record indicates that the power of attorney to Seagate Technology c/o MOFO SF has been revoked by the assignee of the patent application on June 29, 2007. Accordingly, the request to withdraw under 37 C.F.R. § 1.36(b) is moot.

All future communications from the Office will continue to be directed to the below-listed address until otherwise notified by applicant.

Telephone inquires concerning this decision should be directed to undersigned at 571-272-1642.

April M. Wise
Petitions Examiner
Office of Petitions

cc: STEPHEN C. DURANT
NOVAK, DRUCE & QUIGG, LLP
SPEAR STREET TOWER – 35TH FLOOR
ONE MARKET PLAZA
SAN FRANCISCO, CA 94105

UNITED STATES PATENT AND TRADEMARK OFFICE

UNITED STATES DEPARTMENT OF COMMERCE
United States Patent and Trademark Office
Address: COMMISSIONER FOR PATENTS
P.O. Box 1450
Alexandria, Virginia 22313-1450
www.uspto.gov

APPLICATION NUMBER	FILING OR 371 (c) DATE	FIRST NAMED APPLICANT	ATTY. DOCKET NO./TITLE
10/815,130	03/31/2004	Norbert Steven Parsoneault	SEA/3350

CONFIRMATION NO. 9169

OC000000025690823

50269
SEAGATE TECHNOLOGY c/o MOFO SF
425 MARKET ST.
SAN FRANCISCO, CA 94105

Date Mailed: 09/06/2007

NOTICE REGARDING CHANGE OF POWER OF ATTORNEY

This is in response to the Power of Attorney filed 06/29/2007.

- The Power of Attorney to you in this application has been revoked by the assignee who has intervened as provided by 37 CFR 3.71. Future correspondence will be mailed to the new address of record(37 CFR 1.33).

Office of Initial Patent Examination (571) 272-4000, or 1-800-PTO-9199
FORMER ATTORNEY/AGENT COPY

UNITED STATES PATENT AND TRADEMARK OFFICE

COMMISSIONER FOR PATENTS
UNITED STATES PATENT AND TRADEMARK OFFICE
P.O. BOX 1450
ALEXANDRIA, VA 22313-1450
www.uspto.gov

OCT 14 2004

In re Application of	:	
Roy C. Martin Jr.	:	
Serial No. 10/815,134	:	DECISION ON PETITION
Filed: March 31, 2004	:	TO MAKE SPECIAL
For: NAIL TRIMMER	:	

Applicant's petition, filed March 31, 2004, requests that this application be rendered special for examination in that applicant is over sixty-five (65) years of age.

The petition has been reviewed and is found to be in compliance with the requirements for special status as set forth in Section 708.02(IV) of the Manual of Patent Examining Procedure (MPEP).

PETITION GRANTED.

E. Rollins-Cross, Director
Technology Center 3700

Roy C. Martin, Jr.
97 French's Point
Glenburn, ME 04401

UNITED STATES PATENT AND TRADEMARK OFFICE

Commissioner for Patents
United States Patent and Trademark Office
P.O. Box 1450
Alexandria, VA 22313-1450
www.uspto.gov

TEXAS INSTRUMENTS INCORPORATED
P O BOX 655474, M/S 3999
DALLAS TX 75265

COPY MAILED

NOV 2 0 2007

OFFICE OF PETITIONS

In re Application of	:	
Demoor, Robert G.	:	
Application No. 10/815,136	:	ON PETITION
Filed: March 31, 2004	:	
Attorney Docket No. TI-35546	:	

This is a decision on the petition under 37 C.F.R. § 1.137(b), filed October 25, 2007, to revive the above-identified application.

The petition is **GRANTED.**

The petition satisfies the conditions for revival pursuant to the provisions of 37 CFR 1.137(b) in that (1) the reply in the form of an Amendment; (2) the petition fee; and (3) the required statement of unintentional delay have been received. Accordingly, the response has been accepted as having been unintentionally delayed.

This matter is being referred to Technology Center 2800 for further examination on the merits.

Telephone inquiries regarding this decision should be directed to the undersigned at (571) 272-3206.

Liana Walsh
Petitions Examiner
Office of Petitions

UNITED STATES PATENT AND TRADEMARK OFFICE

Commissioner for Patents
United States Patent and Trademark Office
P.O. Box 1450
Alexandria, VA 22313-1450
www.uspto.gov

MAILED
FROM DIRECTOR'S OFFICE

DEC 13 2007

TECHNOLOGY CENTER 3600

James J. Ralabate
5792 Main Street
Williamsville, NY 14221

In re Application of
Robert A. Clark
Application No. 10/815,142
Filed: March 31, 2004
For: SUBSTRATE BENDING STIFFNESS MEASUREMENT METHOD AND SYSTEM

DECISION ON PETITION UNDER 37 CFR §1.181

This is a decision on the petition under 37 CFR 1.181 filed May 9, 2006, for the entry of claims 5 and 6 as filed on April 12, 2006 and the Removal of the Notice of Non-Responsive Amendment sent by the Primary Examiner on April 26, 2006.

The petition is **GRANTED**.

This application was filed March 31, 2004 and included claims 1-4 directed toward a "method of feeding". On April 12, 2006, in response to a non-final rejection, the Petitioner submitted an amendment canceling claims 1-4 and adding new claims 5 and 6 directed to a "method for real time measuring". On April 26, 2006, the examiner held the amendment "non-responsive" because the newly submitted claims were directed to an invention independent or distinct from the invention originally claimed. On May 9, 2006, the Petitioner filed this Petition as well as a substitute amendment canceling the originally filed claims 1-4, restating claims 5 and 6 directed to a "method for real time measuring" as they were previously submitted, and adding claims 7 and 8 directed to an "apparatus for real time measuring".

The Petitioner contends that claims 5 and 6 filed April 12, 2006 merely addressed the examiner's objection to ambiguities in the original method claims. The Petitioner also states that claims 5 and 6 better distinguish over previously cited references.

M.P.E.P. § 814 states that the examiner must provide a clear and detailed record of a restriction requirement. M.P.E.P. § 817 provides an outline for the examiner to use when setting forth a requirement to restrict. A review of the Notice of Non-

Responsive Amendment demonstrates that the examiner did not follow the outline presented in M.P.E.P. § 817 for a Letter for Restriction Requirement in communicating the examiner's reasons for restriction. Therefore, the examiner's reasons for restriction were not clearly communicated to Petitioner.

In view of the finding above, the Notice of Non-Responsive Amendment mailed April 26, 2006 is VACATED. Accordingly, the application will be returned to the examiner to continue prosecution. The substitute amendment filed on May 9, 2006 including claims 5-8 will be entered. If the examiner determines that a requirement for restriction should be made in this application, the examiner must provide a clear and detailed record of the requirement by following the outline of Letter for Restriction Requirement provided in M.P.E.P. § 817.

This application is being forwarded to the examiner of record.

Any questions regarding this letter should be directed to Patrick Mackey at (571) 272-6916.

Kathy Matecki

Kathy Matecki, Director
Technology Center 3600
571-272-5250

KM

UNITED STATES PATENT AND TRADEMARK OFFICE

Commissioner for Patents
United States Patent and Trademark Office
P.O. Box 1450
Alexandria, VA 22313-1450
www.uspto.gov

John C. Alemanni
PATENT DEPARTMENT-53051
KILPATRICK STOCKTON LLP
1001 West Fourth Street
Winston-Salem, NC 27101

MAILED

SEP 0 9 2005

Technology Center 2100

In re Application of:	)	
Stephen R. Lawrence	)	
Application No. 10/815,150	)	
Filed: March 31, 2004	)	**DECISION ON REQUEST FOR**
For: SYSTEMS AND METHODS FOR	)	**WITHDRAWAL AS ATTORNEY**
ANALYZING BOILERPLATE	)	
	)	

This is a decision on the Request For Withdrawal As Attorney Under 37 CFR § 1.36 and 10.40(c) filed March 10, 2005.

A Revocation and Substitution Of Power Of Attorney Under 37 CFR § 1.36 was filed on April 19, 2005. The Power Of Attorney revoked all prior Powers Of Attorney and appointed the practitioners of Fenwick & West LLP as the attorneys of record of the instant application. The Power Of Attorney filed April 19, 2005 was accepted. Accordingly, all communications from the U.S. Patent and Trademark Office to applicant are to be conducted by FENWICK & WEST LLP.

For the above stated reasons, the request is **DISMISSED AS MOOT**.

No further communication to you regarding this application will be made.

Michelle R. Eason

Vincent N. Trans
Special Program Examiner
Technology Center 2100
Computer Architecture, Software, and
Information Security
571-272-3613

UNITED STATES PATENT AND TRADEMARK OFFICE

Commissioner for Patents
United States Patent and Trademark Office
P.O. Box 1450
Alexandria, VA 22313-1450
www.uspto.gov

GOOGLE / FENWICK
SILICON VALLEY CENTER
801 CALIFORNIA STREET
MOUNTAIN VIEW, CA 94041

COPY MAILED

NOV 09 2007

OFFICE OF PETITIONS

In re Application of
Stephen R. Lawrence
Application No. 10/815,150
Filed: March 31, 2004
Attorney Docket No. 24207-10085

DECISION ON PETITION
UNDER 37 CFR 1.137(b)

This is a decision on the petition, filed July 30, 2007, which is being treated as a petition under 37 CFR 1.137(b) to revive the instant nonprovisional application for failure to timely notify the U.S. Patent and Trademark (USPTO) of the filing of an application in a foreign country, or under a multinational treaty that requires publication of applications eighteen months after filing. *See* 37 CFR 1.137(f).

The petition is **GRANTED**.

Petitioner states that the instant nonprovisional application is the subject of an application filed in an eighteen-month publication country on March 30, 2005. However, the USPTO was unintentionally not notified of this filing within 45 days subsequent to the filing of the subject application in an eighteen-month publication country.

In view of the above, this application became abandoned pursuant to 35 U.S.C. § 122(b)(2)(B)(iii) and 37 CFR 1.213(c) for failure to timely notify the Office of the filing of an application in a foreign country or under a multilateral international agreement that requires publication of applications 18 months after filing.

A petition to revive an application abandoned pursuant to 35 U.S.C. 122(b)(2)(B)(iii) for failure to notify the USPTO of a foreign filing must be accompanied by:

(1) the required reply which is met by the notification of such filing in a foreign country or under a multinational treaty;
(2) the petition fee as set forth in 37 CFR 1.17(m); and
(3) a statement that the entire delay in filing the required reply from the due date of the reply until the filing of a grantable petition was unintentional.

The instant petition has been found to be in compliance with 37 CFR 1.137(b). Accordingly, the failure to timely notify the USPTO of a foreign or international filing within 45 days after the date of filing of such foreign or international application as provided by 35 U.S.C. § 122(b)(2)(B)(iii) and 37 CFR 1.213(c) is accepted as having been unintentionally delayed.

The previous Request and Certification under 35 U.S.C. § 122(b)(2)(B)(i) has been rescinded. A Notice Regarding Rescission of Nonpublication Request which sets forth the projected publication date of February 14, 2008 accompanies this decision on petition.

Telephone inquiries concerning this decision should be directed to Irvin Dingle at (571) 272-3210.

This application is being referred to Technology Center Art Unit 2166 for examination in due course.

Irvin Dingle
Petition Examiner
Office of Petitions

ATTACHMENT: Notice Regarding Rescission of Nonpublication Request

UNITED STATES PATENT AND TRADEMARK OFFICE

UNITED STATES DEPARTMENT OF COMMERCE
United States Patent and Trademark Office
Address: COMMISSIONER FOR PATENTS
P.O. Box 1450
Alexandria, Virginia 22313-1450
www.uspto.gov

APPLICATION NUMBER	FILING OR 371(C) DATE	FIRST NAMED APPLICANT	ATTY. DOCKET NO./TITLE
10/815,150	03/31/2004	Stephen R. Lawrence	24207-10085

CONFIRMATION NO. 8210

62296
GOOGLE / FENWICK
SILICON VALLEY CENTER
801 CALIFORNIA ST.
MOUNTAIN VIEW, CA 94041

NONPUBLICATION RESCISSION LETTER

OC000000026671356

Date Mailed: 11/08/2007

Communication Regarding Rescission Of Nonpublication Request and/or Notice of Foreign Filing

Applicant's rescission of the previously-filed nonpublication request and/or notice of foreign filing is acknowledged. The paper has been reflected in the Patent and Trademark Office's (USPTO's) computer records so that the earliest possible projected publication date can be assigned.

The projected publication date is 02/14/2008.

If applicant rescinded the nonpublication request before or on the date of "foreign filing,"[1] then no notice of foreign filing is required.

If applicant foreign filed the application after filing the above application and before filing the rescission, and the rescission did not also include a notice of foreign filing, then a notice of foreign filing (not merely a rescission) is required to be filed within 45 days of the date of foreign filing. See 35 U.S.C. § 122(b)(2)(B)(iii), and Clarification of the United States Patent and Trademark Office's Interpretation of the Provisions of 35 U.S.C. § 122(b)(2)(B)(ii)-(iv), 1272 Off. Gaz. Pat. Office 22 (July 1, 2003).

If a notice of foreign filing is required and is not filed within 45 days of the date of foreign filing, then the application becomes abandoned pursuant to 35 U.S.C. § 122(b)(2)(B)(iii). In this situation, applicant should either file a petition to revive or notify the Office that the application is abandoned. See 37 CFR 1.137(f). Any such petition to revive will be forwarded to the Office of Petitions for a decision. Note that the filing of the petition will not operate to stay any period of reply that may be running against the application.

Questions regarding petitions to revive should be directed to the Office of Petitions at (571) 272-3282. Questions regarding publications of patent applications should be directed to the patent application publication hotline at (703) 605-4283 or by e-mail pgpub@uspto.gov.

[1] Note, for purpose of this notice, that "foreign filing" means "filing an application directed to the same invention in another country, or under a multilateral international agreement, that requires publication of applications 18 months after filing".

United States
Patent And
Trademark Office

P.O. Box 1450, Alexandria, Virginia 22313-1450 – www.uspto.gov

PETITION DECISION

05/24/04

Beverly E. Hjorth
Weingarten, Schurgin, Gagnebin & Lebovici LLP
Ten Post Office Square
Boston, Ma 02109

Dear Applicant:

The Box PG Pub replacement drawings for application number 10/815178 received on 05/03/04 by the U. S. Patent and Trademark Office will be included for patent publication.

Telephone inquiries should be directed to Kaletus King, Office of Pre-Grant Publication 703 605-4283.

Kaletus King

Signature of Reviewer, Office of Pre-Grant Publication

UNITED STATES PATENT AND TRADEMARK OFFICE

UNITED STATES DEPARTMENT OF COMMERCE
United States Patent and Trademark Office
Address: COMMISSIONER FOR PATENTS
P.O. Box 1450
Alexandria, Virginia 22313-1450
www.uspto.gov

IBM CORPORATION
INTELLECTUAL PROPERTY LAW
11501 BURNET ROAD
AUSTIN, TX 78758

Mail Date: 04/20/2010

Applicant	: Craig Ardner Swearingen	: DECISION ON REQUEST FOR
Patent Number	: 7606862	: RECALCULATION of PATENT
Issue Date	: 10/20/2009	: TERM ADJUSTMENT IN VIEW
Appliction No	: 10/815,210	: OF WYETH AND NOTICE OF INTENT TO
Filed	: 03/31/2004	: ISSUE CERTIFICATE OF CORRECTION
		:

The Request for Recalculation is **GRANTED** to the extent indicated.

The patent term adjustment has been determined to be **1377** days. The USPTO will *sua sponte* issue a certificate of correction reflecting the amount of PTA days determined by the recalculation.

Prior to the issuance of the certificate of correction, the USPTO will afford patentee an opportunity to be heard and request reconsideration. Accordingly, patentee has **one month or thirty (30) days**, whichever is longer, to file a request for reconsideration of this patent term adjustment calculation. See 35 U.S.C. 154(b)(3)(B)(ii) and 37 CFR 1.322(a)(4). No extensions of time will be granted under 37 CFR 1.136.

Patentee should use document code PET.OP if electronically filing a request for reconsideration of this patent term adjustment calculation. The patentee must also include the information required by 37 CFR 1.705(b)(2) and the fee required by 37 CFR 1.18(e). If patentee does not file a timely request for reconsideration of this patent term adjustment calculation including the information required by 37 CFR 1.705(b)(2) and the fee required by 37 CFR 1.18(e), the USPTO will issue a certificate of correction reflecting the PTA determination noted above.

Patentee should be aware that in order to preserve the right to review in the United States District Court for the District of Columbia of the USPTO patent term adjustment determination, patentee must ensure that he or she also take the steps required under 35 U.S.C. 154(b)(4)(A) in a timely manner. Nothing in the request for recalculation should be construed as providing an alternative time frame for commencing a civil action under 35 U.S.C. 154(b)(4)(A).

Any questions concerning this decision should be directed to the Office of Patent Legal Administration at 571-272-7702.

UNITED STATES PATENT AND TRADEMARK OFFICE

UNITED STATES DEPARTMENT OF COMMERCE
United States Patent and Trademark Office
Address: COMMISSIONER FOR PATENTS
P.O. Box 1450
Alexandria, Virginia 22313-1450
www.uspto.gov

IBM CORPORATION
INTELLECTUAL PROPERTY LAW
11501 BURNET ROAD
AUSTIN, TX 78758

Mail Date: 04/20/2010

Applicant	: Christopher Hoang Doan	: DECISION ON REQUEST FOR
Patent Number	: 7603420	: RECALCULATION of PATENT
Issue Date	: 10/13/2009	: TERM ADJUSTMENT IN VIEW
Appliction No	: 10/815,215	: OF WYETH AND NOTICE OF INTENT TO
Filed	: 03/31/2004	: ISSUE CERTIFICATE OF CORRECTION
		:

The Request for Recalculation is **GRANTED** to the extent indicated.

The patent term adjustment has been determined to be **1596** days. The USPTO will *sua sponte* issue a certificate of correction reflecting the amount of PTA days determined by the recalculation.

Prior to the issuance of the certificate of correction, the USPTO will afford patentee an opportunity to be heard and request reconsideration. Accordingly, patentee has **one month or thirty (30) days**, whichever is longer, to file a request for reconsideration of this patent term adjustment calculation. See 35 U.S.C. 154(b)(3)(B)(ii) and 37 CFR 1.322(a)(4). No extensions of time will be granted under 37 CFR 1.136.

Patentee should use document code PET.OP if electronically filing a request for reconsideration of this patent term adjustment calculation. The patentee must also include the information required by 37 CFR 1.705(b)(2) and the fee required by 37 CFR 1.18(e). If patentee does not file a timely request for reconsideration of this patent term adjustment calculation including the information required by 37 CFR 1.705(b)(2) and the fee required by 37 CFR 1.18(e), the USPTO will issue a certificate of correction reflecting the PTA determination noted above.

Patentee should be aware that in order to preserve the right to review in the United States District Court for the District of Columbia of the USPTO patent term adjustment determination, patentee must ensure that he or she also take the steps required under 35 U.S.C. 154(b)(4)(A) in a timely manner. Nothing in the request for recalculation should be construed as providing an alternative time frame for commencing a civil action under 35 U.S.C. 154(b)(4)(A).

Any questions concerning this decision should be directed to the Office of Patent Legal Administration at 571-272-7702.

UNITED STATES PATENT AND TRADEMARK OFFICE

Commissioner for Patents
United States Patent and Trademark Office
P.O. Box 1450
Alexandria, VA 22313-1450
www.uspto.gov

PATENT GROUP
CHOATE, HALL & STEWART
EXCHANGE PLACE
53 STATE STREET
BOSTON, MA 02109-2804

COPY MAILED
NOV 30 2004
OFFICE OF PETITIONS

In re Application of	:	
Ginter et al.	:	
Application No. 10/815,222	:	DECISION GRANTING PETITION
Filed: March 31, 2004	:	UNDER 37 CFR 1.137(b)
Attorney Docket No. VRS-00101	:	

This is a decision on the petition under 37 CFR 1.137(b), filed October 4, 2004, to revive the instant nonprovisional application for failure to timely notify the U.S. Patent and Trademark (USPTO) of the filing of an application in a foreign country, or under a multinational treaty that requires publication of applications eighteen months after filing. *See* 37 CFR 1.137(f).

The petition is **GRANTED**.

Petitioner states that the instant nonprovisional application is the subject of an application filed in an eighteen month publication country on June 8, 2004. However, the USPTO was unintentionally not notified of this filing within 45 days subsequent to the filing of the subject application in an eighteen month publication country.

In view of the above, this application became abandoned pursuant to 35 U.S.C. § 122(b)(2)(B)(iii) and 37 CFR 1.213(c) for failure to timely notify the Office of the filing of an application in a foreign country or under a multilateral international agreement that requires publication of applications 18 months after filing.

A petition to revive an application abandoned pursuant to 35 U.S.C. 122(b)(2)(B)(iii) for failure to notify the USPTO of a foreign filing must be accompanied by:

(1) the required reply which is met by the notification of such filing in a foreign country or under a multinational treaty;

(2) the petition fee as set forth in 37 CFR 1.17(m); and

(3) a statement that the entire delay in filing the required reply from the due date of the reply until the filing of a grantable petition was unintentional.

The instant petition has been found to be in compliance with 37 CFR 1.137(b). Accordingly, the failure to timely notify the USPTO of a foreign or international filing within 45 days after the date of filing of such foreign or international application as provided by 35 U.S.C. § 122(b)(2)(B)(iii) and 37 CFR 1.213(c) is accepted as having been unintentionally delayed.

The previous Request and Certification under 35 U.S.C. § 122(b)(2)(B)(i) has been rescinded. A Notice Regarding Rescission of Nonpublication Request which sets forth the projected publication date of January 20, 2005 was mailed on Ocotber 14, 2004.

This application is being forwarded to Technology Center 2100 for further examination in due course.

Any inquiries concerning this decision may be directed to the undersigned at (571)272-3228.

Edward J. Tannouse
Petitions Attorney
Office of Petitions
United States Patent and Trademark Office

UNITED STATES PATENT AND TRADEMARK OFFICE

Commissioner for Patents
United States Patent and Trademark Office
P.O. Box 1450
Alexandria, VA 22313-1450
www.uspto.gov

COPY MAILED

APR 2 6 2007

OFFICE OF PETITIONS

CARR & FERRELL LLP
2200 GENG ROAD
PALO ALTO CA 94303

In re Application of	:	
Michael F. Kenrich, et al.	:	
Application No. 10/815,229	:	DECISION ON PETITION
Filed: March 30, 2004	:	TO WITHDRAW
Attorney Docket No. SSL1P027/SS-47	:	FROM RECORD
	:	

This is a decision on the Request to Withdraw as attorney or agent of record under 37 C.F.R. § 1.36(b) filed November 20, 2006.

The request is **DISMISSED** as moot.

A review of the file record indicates that the power of attorney to Carr & Ferrell has been revoked by the assignee of the patent application on March 5, 2007. Accordingly, the request to withdraw under 37 C.F.R. § 1.36(b) is moot.

All future communications from the Office will continue to be directed to the below-listed address until otherwise notified by applicant.

Telephone inquires concerning this decision should be directed to undersigned at 571-272- 1642.

April M. Wise
Petitions Examiner
Office of Petitions

cc: RYAN MORRISON
INVENTION LAW GROUP
1756 – 114TH AVENUE SE
SUITE 110
BELLEVUE, WA 98004

UNITED STATES PATENT AND TRADEMARK OFFICE

UNITED STATES DEPARTMENT OF COMMERCE
United States Patent and Trademark Office
Address: COMMISSIONER FOR PATENTS
P.O. Box 1450
Alexandria, Virginia 22313-1450
www.uspto.gov

APPLICATION NUMBER	FILING OR 371 (c) DATE	FIRST NAMED APPLICANT	ATTY. DOCKET NO./TITLE
10/815,229	03/30/2004	Michael Frederick Kenrich	SSL1P027/SS-47

CONFIRMATION NO. 8114

OC000000023487617

OC000000023487617

22830
CARR & FERRELL LLP
2200 GENG ROAD
PALO ALTO, CA 94303

Date Mailed: 04/20/2007

NOTICE REGARDING CHANGE OF POWER OF ATTORNEY

This is in response to the Power of Attorney filed 03/05/2007.

- The Power of Attorney to you in this application has been revoked by the assignee who has intervened as provided by 37 CFR 3.71. Future correspondence will be mailed to the new address of record(37 CFR 1.33).

Office of Initial Patent Examination (571) 272-4000, or 1-800-PTO-9199
FORMER ATTORNEY/AGENT COPY

UNITED STATES PATENT AND TRADEMARK OFFICE

COMMISSIONER FOR PATENTS
UNITED STATES PATENT AND TRADEMARK OFFICE
P.O. BOX 1450
ALEXANDRIA, VA 22313-1450
www.uspto.gov

Paper No.

C. Douglas Thomas
BEYER WEAVER & THOMAS LLP
P.O. Box 70250
Oakland, CA 94612-0250

MAILED

APR 26 2005

Technology Center 2100

In re Application of:
Satyajit Nath
Application No. 10/815,251
Filed: March 30, 2004
For: METHOD AND SYSTEM FOR PROVIDING DOCUMENT RETENTION USING CRYPTOGRAPHY

DECISION ON REQUEST TO WITHDRAW AS ATTORNEY OR AGENT

This is a decision on the Request To Withdraw from Representation Under 37 CFR 1.36 and 10.40(c) filed January 10, 2005.

A Power of Attorney Under 37 CFR 1.36 was filed on February 14, 2005. The Power Of Attorney revoked all prior Powers Of Attorney and appointed CARR & FERRELL LLP as the attorneys of record of the instant application. The Power Of Attorney of February 10, 2005, was accepted. Accordingly, all communications from the U.S. Patent and Trademark Office to applicant are to be conducted by CARR & FERRELL LLP.

For the above stated reasons, the request is **DISMISSED AS MOOT**.

No further communication to you regarding this application will be made.

James R. Matthews

for Vincent N. Trans
Special Program Examiner
Technology Center 2100
Computer Architecture, Software, and
Information Security
(571) 272-3613

cc: CARR & FERRELL LLP
2200 Geng Road
Palo Alto, CA 94303

UNITED STATES PATENT AND TRADEMARK OFFICE

Commissioner for Patents
United States Patent and Trademark Office
P.O. Box 1450
Alexandria, VA 22313-1450
www.uspto.gov

CARR & FERRELL LLP
2200 GENG ROAD
PALO ALTO CA 94303

COPY MAILED

APR 2 7 2007

OFFICE OF PETITIONS

In re Application of	:	
Satyajit Nath	:	
Application No. 10/815,251	:	DECISION ON PETITION
Filed: March 30, 2004	:	TO WITHDRAW
Attorney Docket No. SSL1P026/SS-46	:	FROM RECORD
	:	

This is a decision on the Request to Withdraw as attorney or agent of record under 37 C.F.R. § 1.36(b) filed November 20, 2006.

The request is **APPROVED**.

A grantable request to withdraw as attorney/agent of record must be signed by every attorney/agent seeking to withdraw or contain a clear indication that one attorney is signing on behalf of another/others. A request to withdraw will not be approved unless at least 30 (thirty) days would remain between the date of approval and the later of the expiration date of a time to file a response or the expiration date of the maximum time period which can be extended under 37 C.F.R. § 1.136(a).

The request was signed by Susan Yee on behalf of all attorneys of record who are associated with customer No. 22830.

All attorneys/agents associated with the Customer Number 22830 have been withdrawn.

Applicant is reminded that there is no attorney of record at this time.

The request to change the correspondence of record is not acceptable as the requested correspondence address is not that of: (1) the first named signing inventor; or (2) an intervening assignee of the entire interest under 37 C.F.R 3.71. All future communications from the Office will be directed to the assignee of the entire interest at the first copied address below until otherwise properly notified by the applicant.

There are no pending Office actions at the present time.

Telephone inquiries concerning this decision should be directed to undersigned at 571-272-1642.

April M. Wise
Petitions Examiner
Office of Petitions

cc: PERVASIVE SECURITY SYSTEMS, INC.
2525 CHARLESTON ROAD
SUITE 201
MOUNTAIN VIEW, CA 94043

cc: RYAN MORRISON
INVENTION LAW GROUP
1756 – 114TH AVENUE SE
SUITE 110
BELLEVUE, WA 98004

UNITED STATES PATENT AND TRADEMARK OFFICE

UNITED STATES DEPARTMENT OF COMMERCE
United States Patent and Trademark Office
Address: COMMISSIONER FOR PATENTS
P.O. Box 1450
Alexandria, Virginia 22313-1450
www.uspto.gov

APPLICATION NUMBER	FILING OR 371 (c) DATE	FIRST NAMED APPLICANT	ATTY. DOCKET NO./TITLE
10/815,251	03/30/2004	Satyajit Nath	SSL1P026/SS-46

CONFIRMATION NO. 8159

OC000000023565863

OC000000023565863

22830
CARR & FERRELL LLP
2200 GENG ROAD
PALO ALTO, CA 94303

Date Mailed: 04/26/2007

NOTICE REGARDING CHANGE OF POWER OF ATTORNEY

This is in response to the Power of Attorney filed 11/20/2006.

- The withdrawal as attorney in this application has been accepted. Future correspondence will be mailed to the new address of record. 37 CFR 1.33.

Office of Initial Patent Examination (571) 272-4000, or 1-800-PTO-9199
FORMER ATTORNEY/AGENT COPY

United States Patent and Trademark Office

Commissioner for Patents
United States Patent and Trademark Office
P.O. Box 1450
Alexandria, VA 22313-1450
www.uspto.gov

STERNE, KESSLER, GOLDSTEIN & FOX P.L.L.C.
1100 NEW YORK AVENUE, N.W.
WASHINGTON DC 20005

COPY MAILED

OCT 2 8 2008

OFFICE OF PETITIONS

In re Application of :
Satyajit Nath :
Application No. 10/815,251 :
Filed: March 30, 2004 :
Attorney Docket No. 2222.5500000

ON PETITION

This is a decision on the petition, filed October 27, 2008 under 37 CFR 1.313(c)(2) to withdraw the above-identified application from issue after payment of the issue fee.

The petition is **GRANTED**.

The above-identified application is withdrawn from issue for consideration of a submission under 37 CFR 1.114 (request for continued examination). See 37 CFR 1.313(c)(2).

Petitioner is advised that the issue fee paid on May 29, 2008 in the above-identified application cannot be refunded. If, however, the above-identified application is again allowed, petitioner may request that it be applied towards the issue fee required by the new Notice of Allowance.[1]

Telephone inquiries should be directed to Karen Creasy at (571) 272-3208.

This matter is being referred to Technology Center AU 2132 for processing of the request for continued examination under 37 CFR 1.114 and for consideration of the concurrently filed Information Disclosure Statement.

/Karen Creasy/
Karen Creasy
Petitions Examiner
Office of Petitions

---

[1] The request to apply the issue fee to the new Notice may be satisfied by completing and returning the new Issue Fee Transmittal Form PTOL-85(b), which includes the following language thereon: Commissioner for Patents is requested to apply the Issue Fee and Publication Fee (if any) or re-apply any previously paid issue fee to the application identified above. Petitioner is advised that, whether a fee is indicated as being due or not, the Issue Fee Transmittal Form **must** be completed and timely submitted to avoid abandonment. Note the language in bold text on the first page of the Notice of Allowance and Fee(s) Due (PTOL-85).

UNITED STATES PATENT AND TRADEMARK OFFICE

Commissioner for Patents
United States Patent and Trademark Office
P.O. Box 1450
Alexandria, VA 22313-1450
www.uspto.gov

QUALCOMM INCORPORATED
5775 MOREHOUSE DR.
SAN DIEGO, CA 92121

MAILED
JUN 16 2010
OFFICE OF PETITIONS

In re Application of	:	
Olivier Michaelis, et al.	:	
Application No. 10/815,256	:	DECISION GRANTING PETITION
Filed: March 31, 2004	:	UNDER 37 CFR 1.313(c)(2)
Attorney Docket No. 030282	:	

This is a decision on the petition under 37 CFR 1.313(c)(2), filed June 15, 2010, to withdraw the above-identified application from issue after payment of the issue fee.

The petition is **GRANTED**.

The above-identified application is withdrawn from issue for consideration of a submission under 37 CFR 1.114 (request for continued examination). *See* 37 CFR 1.313(c)(2).

Petitioner is advised that the issue fee paid on June 8, 2010 cannot be refunded. If, however, this application is again allowed, petitioner may request that it be applied towards the issue fee required by the new Notice of Allowance.[1]

Telephone inquiries regarding this decision should be directed to undersigned at (571) 272-1642. All other inquiries concerning the examination or status of this application should be directed to the Technology Center.

This application is being referred to Technology Center AU 2434 for processing of the request for continued examination under 37 CFR 1.114 and for consideration of the concurrently filed information disclosure statement.

/AMW/
April M. Wise
Petitions Examiner
Office of Petitions

---

[1] *The request to apply the issue fee to the new Notice may be satisfied by completing and returning the new Part B – Fee(s) Transmittal Form (along with any balance due at the time of submission). Petitioner is advised that the Issue Fee Transmittal Form must be completed and timely submitted to avoid abandonment of the application.*

UNITED STATES PATENT AND TRADEMARK OFFICE

Commissioner for Patents
United States Patent and Trademark Office
P.O. Box 1450
Alexandria, VA 22313-1450
www.uspto.gov

MORRISON & FOERSTER LLP
1650 TYSONS BOULEVARD, SUITE 300
MCLEAN, VA 22102

COPY MAILED

SEP 1 0 2007

OFFICE OF PETITIONS

In re Application of :
SUNDARARAJAN, et al. :
Application No. 10/815,264 :
Filed: March 31, 2004 :
Attorney Docket No. **21058/0206768-US0** :

DECISION ON PETITION
TO WITHDRAW
FROM RECORD

This is a decision on the Request to Withdraw as attorney or agent of record under 37 C.F.R. § 1.36(b), filed April 6, 2007.

The request is **NOT APPROVED** as moot.

A review of the file record indicates that the power of attorney to **MORRISON & FOERSTER LLP** has been revoked by the assignee of the patent application on May 15, 2007. Accordingly, the request to withdraw under 37 C.F.R. § 1.36(b) is moot.

All future communications from the Office will continue to be directed to the below-listed address until otherwise notified by applicant.

Telephone inquires concerning this decision should be directed to the undersigned at 571-272-7253.

Monica A. Graves
Petitions Examiner
Office of Petitions

cc: **DARBY & DARBY PC**
P.O. BOX 770
CHURCH STREET STATION
NEW YORK, NY 10008-0770

UNITED STATES PATENT AND TRADEMARK OFFICE

Commissioner for Patents
United States Patent and Trademark Office
P.O. Box 1450
Alexandria, VA 22313-1450
www.uspto.gov

SHELL OIL COMPANY
P O BOX 2463
HOUSTON, TX 77252-2463

COPY MAILED

MAY 27 2005

OFFICE OF PETITIONS

In re Application of :
Paul Michael McAllister et al :DECISION ON PETITION
Application No. 10/815,276 :UNDER 37 CFR 1.78(a)(3)
Filed: April 1, 2004 :
Attorney Docket No. TH-2306 02 (US) HS:KNL :

This is a decision on the petition under 37 CFR 1.78, filed December 21, 2004, which is being treated under 37 CFR 1.78(a)(3), requesting acceptance of an unintentionally delayed claim under 35 U.S.C. § 120 for the benefit of the prior-filed nonprovisional Application No. 10/431,035, filed May 7, 2003, as set forth in the amendment filed concurrently with the instant petition.

The petition is **DISMISSED AS MOOT**.

A petition under 37 CFR 1.78(a)(3) is only applicable to those applications filed on or after November 29, 2000.

Along with the instant petition under 37 CFR 1.78(a)(3), petitioner has submitted an amendment to the first sentence of the specification following the title to include a reference to the prior-filed application.

The instant pending nonprovisional application was filed on April 1, 2004, and was pending at the time of filing of the instant petition. Reference to the prior-filed application was made in the transmittal letter filed with the instant application.

The current procedure where a claim for priority under 37 CFR 1.78(a)(3) is not included in the first sentence of the specification or in an ADS but does appear either in the oath or declaration or a transmittal letter filed with the application and the Office notes the claim for priority, no petition will be required to accept a late claim for priority. This is because the application would have been scheduled for publication on the basis of the information concerning the claim submitted elsewhere in the application within the time period set forth in 37 CFR 1.78(a)(2)(ii). However, on the other hand, if the USPTO does not note the claim for priority to the prior-filed application(s) set forth in the oath or declaration or transmittal letter submitted with the application, a petition will be required to accept a late claim for priority under 37 CFR 1.78(a)(3).[1] In the instant case, the Office noted the claim for priority of the above-noted, prior-filed application in the transmittal letter filed with the application, as shown by its inclusion on the filing receipt.

---

[1] *Note* MPEP 201.11 (V), page 200-75 (Rev. 1. Feb. 2004 and 66 Federal Register 67087 at 67089 (Dec. 28, 2001), effective December 28, 2001.

In view of the above, the $1,370 petition fee submitted is unnecessary and will be credited to petitioner's deposit account in due course.

The file does not indicate a change of address has been submitted, although the address given on the petition differs from the address of record. If appropriate, a change of address should be filed in accordance with MPEP 601.03. A courtesy copy of this decision is being mailed to the address given on the petition; however, the Office will mail all future correspondence solely to the address of record.

Any questions concerning this decision on petition may be directed to Wan Laymon at (571) 272-3220. All other inquiries concerning either the examination procedures or status of the application should be directed to the Technology Center.

This matter is being referred to the Examiner of Technology Center AU 1626 for appropriate action on the amendment filed December 21, 2004, including consideration of the claim under 35 U.S.C. § 120 and 37 CFR 1.78(a)(2) for benefit of the above-noted, prior-filed application.

Karen Creasy for

Frances Hicks
Lead Petitions Examiner
Office of Petitions
Office of the Deputy Commissioner
for Patent Examination Policy

cc: HOWREY SIMON ARNOLD & WHITE
BOX NO. 34
1299 PENNSYLVANIA AVENUE, N.W.
WASHINGTON, DC 20004-2402

UNITED STATES PATENT AND TRADEMARK OFFICE

Commissioner for Patents
United States Patent and Trademark Office
P.O. Box 1450
Alexandria, VA 22313-1450
www.uspto.gov

F. CHAU & ASSOCIATES, LLC
130 WOODBURY ROAD
WOODBURY, NY 11797

MAILED

JUN 0 3 2009

OFFICE OF PETITIONS

In re Application of	:	
Soon-Il Ahn, et al.	:	
Application No.: 10/815,287	:	ON PETITION
Filed: April 1, 2004	:	
Attorney Docket No.: 8054-57 (LW9035US/KE	:	

This is a decision on the petition, filed April 21, 2009, under 37 CFR 1.313(c)(2) to withdraw the above-identified application from issue after payment of the issue fee.

The petition is **GRANTED**.

The above-identified application is withdrawn from issue for consideration of a submission under 37 CFR 1.114 (request for continued examination). See 37 CFR 1.313(c)(2).

Petitioner is advised that the issue fee paid on May 6, 2009, cannot be refunded. If, however, this application is again allowed, petitioner may request that it be applied towards the issue fee required by the new Notice of Allowance.[1]

Telephone inquiries relating to this decision should be directed to the undersigned at (571) 272-3204.

The application is being referred to Technology Center AU 2822 for further processing of the request for continued examination under 37 CFR 1.114 and for consideration of the concurrently filed amendment.

/SDB/

Sherry D. Brinkley
Petitions Examiner
Office of Petitions

[1] *The request to apply the issue fee to the new Notice may be satisfied by completing and returning the new Part B – Fee(s) Transmittal Form (along with any balance due at the time of submission). Petitioner is advised that the Issue Fee Transmittal Form must be completed and timely submitted to avoid abandonment of the application.*

UNITED STATES PATENT AND TRADEMARK OFFICE

UNITED STATES DEPARTMENT OF COMMERCE
United States Patent and Trademark Office
Address: COMMISSIONER FOR PATENTS
P.O. Box 1450
Alexandria, Virginia 22313-1450
www.uspto.gov

APPL NO.	FILING OR 371 (c) DATE	ART UNIT	FIL FEE REC'D	ATTY.DOCKET NO	DRAWINGS	TOT CLMS	IND CLMS
10/815,293	04/01/2004	2829	2344	5308-390	9	74	10

CONFIRMATION NO. 8325

CORRECTED FILING RECEIPT

OC000000013167804

20792
MYERS BIGEL SIBLEY & SAJOVEC
PO BOX 37428
RALEIGH, NC 27627

Date Mailed: 07/07/2004

Receipt is acknowledged of this regular Patent Application. It will be considered in its order and you will be notified as to the results of the examination. Be sure to provide the U.S. APPLICATION NUMBER, FILING DATE, NAME OF APPLICANT, and TITLE OF INVENTION when inquiring about this application. Fees transmitted by check or draft are subject to collection. Please verify the accuracy of the data presented on this receipt. **If an error is noted on this Filing Receipt, please write to the Office of Initial Patent Examination's Filing Receipt Corrections, facsimile number 703-746-9195. Please provide a copy of this Filing Receipt with the changes noted thereon. If you received a "Notice to File Missing Parts" for this application, please submit any corrections to this Filing Receipt with your reply to the Notice. When the USPTO processes the reply to the Notice, the USPTO will generate another Filing Receipt incorporating the requested corrections (if appropriate).**

Applicant(s)

Matthew Donofrio, Raleigh, NC;

Domestic Priority data as claimed by applicant

Foreign Applications

If Required, Foreign Filing License Granted: 06/14/2004

Projected Publication Date: 10/06/2005

Non-Publication Request: No

Early Publication Request: No

Title

Laser patterning of light emitting devices and patterned light emitting devices

Preliminary Class

438

LICENSE FOR FOREIGN FILING UNDER
Title 35, United States Code, Section 184
Title 37, Code of Federal Regulations, 5.11 & 5.15

GRANTED

The applicant has been granted a license under 35 U.S.C. 184, if the phrase "IF REQUIRED, FOREIGN FILING LICENSE GRANTED" followed by a date appears on this form. Such licenses are issued in all applications where the conditions for issuance of a license have been met, regardless of whether or not a license may be required as set forth in 37 CFR 5.15. The scope and limitations of this license are set forth in 37 CFR 5.15(a) unless an earlier license has been issued under 37 CFR 5.15(b). The license is subject to revocation upon written notification. The date indicated is the effective date of the license, unless an earlier license of similar scope has been granted under 37 CFR 5.13 or 5.14.

This license is to be retained by the licensee and may be used at any time on or after the effective date thereof unless it is revoked. This license is automatically transferred to any related applications(s) filed under 37 CFR 1.53(d). This license is not retroactive.

The grant of a license does not in any way lessen the responsibility of a licensee for the security of the subject matter as imposed by any Government contract or the provisions of existing laws relating to espionage and the national security or the export of technical data. Licensees should apprise themselves of current regulations especially with respect to certain countries, of other agencies, particularly the Office of Defense Trade Controls, Department of State (with respect to Arms, Munitions and Implements of War (22 CFR 121-128)); the Office of Export Administration, Department of Commerce (15 CFR 370.10 (j)); the Office of Foreign Assets Control, Department of Treasury (31 CFR Parts 500+) and the Department of Energy.

NOT GRANTED

No license under 35 U.S.C. 184 has been granted at this time, if the phrase "IF REQUIRED, FOREIGN FILING LICENSE GRANTED" DOES NOT appear on this form. Applicant may still petition for a license under 37 CFR 5.12, if a license is desired before the expiration of 6 months from the filing date of the application. If 6 months has lapsed from the filing date of this application and the licensee has not received any indication of a secrecy order under 35 U.S.C. 181, the licensee may foreign file the application pursuant to 37 CFR 5.15(b).

UNITED STATES PATENT AND TRADEMARK OFFICE

Commissioner for Patents
United States Patent and Trademark Office
P.O. Box 1450
Alexandria, VA 22313-1450
www.uspto.gov

ROBERT RYAN MORISHITA
MORISHITA LAW FIRM LLC
3800 HOWARD HUGHES PKWY
SUITE 850
LAS VEGAS NV 89169

COPY MAILED

MAR 03 2008

OFFICE OF PETITIONS

In re Application of	:	
Jason M. Mayeroff	:	
Application No. 10/815,304	:	ON PETITION
Filed: March 31, 2004	:	
Attorney Docket No. MAYEROFF04-01	:	

This is a decision on the petition under 37 CFR 1.137(b), filed February 7, 2008, to revive the above-identified application.

The petition under 37 CFR 1.137(b) is **GRANTED**.

The application became abandoned for failure to file a reply to the non-final Office action mailed April 11, 2007. This Office action set a shortened statutory period for reply of three (3) months. No reply having been received, the application became abandoned on July 12, 2007. The Office mailed a Notice of Abandonment on November 23, 2007.

With the instant petition, applicant paid the petition fee, submitted the required reply in the form of an Amendment, and made the proper statement of unintentional delay.

The application is being forwarded to Group Art Unit 3714 for consideration of the Amendment filed February 7, 2008.

Telephone inquiries concerning this decision should be directed to the undersigned at (571)272-3207.

Cliff Congo
Petitions Attorney
Office of Petitions

UNITED STATES PATENT AND TRADEMARK OFFICE

UNITED STATES DEPARTMENT OF COMMERCE
United States Patent and Trademark Office
Address: COMMISSIONER FOR PATENTS
P.O. Box 1450
Alexandria, Virginia 22313-1450
www.uspto.gov

KNOBBE MARTENS OLSON & BEAR LLP
2040 MAIN STREET
FOURTEENTH FLOOR
IRVINE, CA 92614

Mail Date: 05/25/2010

Applicant	: Brian Edwards	: DECISION ON REQUEST FOR
Patent Number	: 7628288	: RECALCULATION of PATENT
Issue Date	: 12/08/2009	: TERM ADJUSTMENT IN VIEW
Application No	: 10/815,324	: OF WYETH AND NOTICE OF INTENT TO
Filed	: 03/31/2004	: ISSUE CERTIFICATE OF CORRECTION
		:

The Request for Recalculation is **GRANTED** to the extent indicated.

The patent term adjustment has been determined to be **1159** days. The USPTO will *sua sponte* issue a certificate of correction reflecting the amount of PTA days determined by the recalculation.

Prior to the issuance of the certificate of correction, the USPTO will afford patentee an opportunity to be heard and request reconsideration. Accordingly, patentee has **one month or thirty (30) days**, whichever is longer, to file a request for reconsideration of this patent term adjustment calculation. See 35 U.S.C. 154(b)(3)(B)(ii) and 37 CFR 1.322(a)(4). No extensions of time will be granted under 37 CFR 1.136.

Patentee should use document code PET.OP if electronically filing a request for reconsideration of this patent term adjustment calculation. The patentee must also include the information required by 37 CFR 1.705(b)(2) and the fee required by 37 CFR 1.18(e). If patentee does not file a timely request for reconsideration of this patent term adjustment calculation including the information required by 37 CFR 1.705(b)(2) and the fee required by 37 CFR 1.18(e), the USPTO will issue a certificate of correction reflecting the PTA determination noted above.

Patentee should be aware that in order to preserve the right to review in the United States District Court for the District of Columbia of the USPTO patent term adjustment determination, patentee must ensure that he or she also take the steps required under 35 U.S.C. 154(b)(4)(A) in a timely manner. Nothing in the request for recalculation should be construed as providing an alternative time frame for commencing a civil action under 35 U.S.C. 154(b)(4)(A).

Any questions concerning this decision should be directed to the Office of Patent Legal Administration at 571-272-7702.

UNITED STATES PATENT AND TRADEMARK OFFICE

Commissioner for Patents
United States Patent and Trademark Office
P.O. Box 1450
Alexandria, VA 22313-1450
www.uspto.gov

BELL, BOYD & LLOYD, LLP
P.O. BOX 1135
CHICAGO IL 60690

COPY MAILED

MAY 1 8 2007

OFFICE OF PETITIONS

In re Application of	:	
Franks, George J. Jr.	:	
Application No. 10/815,334	:	ON PETITION
Filed: April 1, 2004	:	
Attorney Docket No. 79881	:	

This is a decision on the petition under 37 C.F.R. § 1.137(b), filed March 13, 2007, to revive the above-identified application.

The petition is **GRANTED.**

The petition satisfies the conditions for revival pursuant to the provisions of 37 CFR 1.137(b) in that (1) the reply in the form of the Issue Fee Transmittal with payment of the issue and publication fees; (2) the petition fee; and (3) the required statement of unintentional delay have been received. Accordingly, the response has been accepted as having been unintentionally delayed.

This matter is being referred to the Publishing Division for processing into a patent.

Telephone inquiries regarding this decision should be directed to the undersigned at (571) 272-3206.

Liana Walsh
Petitions Examiner
Office of Petitions

UNITED STATES PATENT AND TRADEMARK OFFICE

Commissioner for Patents
United States Patent and Trademark Office
P.O. Box 1450
Alexandria, VA 22313-1450
www.uspto.gov

BERLEX BIOSCIENCES
PATENT DEPARTMENT
2600 HILLTOP DRIVE
P.O. BOX 4099
RICHMOND CA 94804-0099

COPY MAILED

NOV 0 4 2004

OFFICE OF PETITIONS

In re Application of Abdul-Ahad et al. Application No.10/815,342 Filed: April 1, 2004 Attorney Docket No. 53208AUSM1	DECISION REFUSING STATUS UNDER 37 CFR 1.47(a)

This is in response to the petition under 37 CFR § 1.47(a), filed October 4, 2004.

The petition under 37 CFR. § 1.47(a) is **DISMISSED**.

Rule 47 applicant is given TWO MONTHS from the mailing date of this decision to reply, correcting the below-noted deficiencies. Any reply should be entitled "Request for Reconsideration of Petition Under 37 CFR. § 1.47(a)," and should only address the deficiencies noted below, except that the reply may include an oath or declaration executed by the non-signing inventor. **Failure to respond will result in abandonment of the application**. Any extensions of time will be governed by 37 CFR. §1.136(a).

The above-identified application was filed on April 1, 2004, without an executed oath or declaration. Accordingly, on August 3, 2004, applicant was mailed a "Notice to File Missing Parts of Nonprovisional Application - Filing Date Granted," requiring for the purposes of an executed oath or declaration in compliance with § 1.63, and a surcharge for its late filing. This Notice set an extendable two-month period for reply of October 3, 2004.

In reply, applicant filed a petition, the surcharge for late filing of the declaration, and a partially executed declaration. The $130.00 petition fee has been charged to deposit account 02-2117. In support of the petition, applicants submitted copies of correspondence which was mailed to the non-signing inventors.

A grantable petition under 37 CFR. § 1.47(a) requires: (1) proof that the non-signing inventor cannot be reached or refuses to sign the oath or declaration after having been presented with the application papers (specification, claims and drawings); (2) an acceptable oath or declaration in compliance with 35 U.S.C. §§ 115 and 116; (3) the

petition fee; and (4) a statement of the last known address of the non-signing inventor. The instant petition does not satisfy requirement (2).

As to item (2) the declaration executed by Inventor Gross does not contain the mailing and or residence address of inventors Abdul-Ahad and Gross pursuant to 37 CFR 1.63 (c)(1). A review of the file confirms that such information is not located in an application data sheet pursuant to 37 CFR 1.76. A newly executed declaration or an ADS is required.

Further correspondence with respect to this matter should be addressed as follows:

By mail:	Mail Stop Petition Commissioner for Patents P.O. Box 1450 Alexandria, VA 22313-1450
By facsimile:	(703) 872-9306
By delivery service: (FedEx, UPS, DHL, etc.)	U.S. Patent and Trademark Office 20th Street S Customer Window, Mail Stop Petition Crystal Plaza Two, Lobby, Room 1B03 Arlington, VA 22202

Telephone inquiries related to this decision may be directed to the undersigned at (571) 272-3215.

Charlema R. Grant

Charlema R. Grant
Petitions Attorney
Office of Petitions

UNITED STATES PATENT AND TRADEMARK OFFICE

Commissioner for Patents
United States Patent and Trademark Office
P.O. Box 1450
Alexandria, VA 22313-1450
www.uspto.gov gov

BERLEX BIOSCIENCES
PATENT DEPARTMENT
2600 HILLTOP DRIVE
P.O. BOX 4099
RICHMOND CA 94804-0099

COPY MAILED

DEC 3 0 2004

OFFICE OF PETITIONS

In re Application of	:	
Ayad Abdul-Ahad and Dietmar Gross	:	
Application No. 10/815,342	:	DECISION GRANTING STATUS
Filed: April 1, 2004	:	UNDER 37 CFR 1.47(a)
Attorney Docket Number: 53208AUSM1	:	
Title of Invention: HIGHER-DOSES OF	:	
INTERFERON-BETA FOR TREATMENT OF	:	
MULTIPLE SCLEROSIS	:	

This is in response to the renewed petition under 37 CFR 1.47(a), filed December 2, 2004.

The petition is GRANTED.

Petitioner has shown that the non-signing inventor has refused to join in the filing of the above-identified application after having been presented with the application papers. The petition has provided evidence that correspondence sent to non-signing inventor was received and non-signing inventor refused to execute the application papers.

The above-identified application and papers have been reviewed and found in compliance with 37 CFR 1.47(a). This application is hereby accorded Rule 1.47(a) status.

As provided in Rule 1.47(c), this Office will forward notice of this application's filing to the non-signing inventor at the address given in the petition. Notice of the filing of this application will also be published in the Official Gazette.

The Office acknowledges receipt of the ADS submitted with the instant renewed petition.

This application is being forwarded to the Office of Initial Patent Examination for further processing.

Telephone inquiries related to this decision may be directed to the undersigned at (571) 272-3215.

Charlema R Grant

Charlema R. Grant
Petitions Attorney
Office of Petitions

UNITED STATES PATENT AND TRADEMARK OFFICE

Commissioner for Patents
United States Patent and Trademark Office
P.O. Box 1450
Alexandria, VA 22313-1450
www.uspto.gov

Ayad Abdul-Ahad
10 Birch Drive
Basking Ridge, NJ 07920

COPY MAILED

DEC 30 2004

OFFICE OF PETITIONS

In re Application of
Ayad Abdul-Ahad and Dietmar Gross
Application No. 10/815,342
Filed: April 1, 2004
Attorney Docket Number: 53208AUSM1
Title of Invention: HIGHER-DOSES OF INTERFERON-BETA FOR TREATMENT OF MULTIPLE SCLEROSIS

: LETTER

Dear Mr. Abdul-Ahad:

You are named as a joint inventor in the above-identified United States patent application filed under the provisions of 35 U.S.C. 116 (United States Code) and 37 C.F.R. § 1.47(a), Rules of Practice in Patent Cases. Should a patent be granted on the application you will be designated therein as a joint inventor.

As a named inventor you are entitled to inspect any paper in the file wrapper of the application, order copies of all or any part thereof (at a prepaid cost as per 37 C.F.R. § 1.19) or make your position of record in the application. Alternatively, you may arrange to do any of the preceding through a registered patent attorney or agent presenting written authorization from you. If you care to join the application, applicant (see below) would presumably assist you. Joining in the application would entail the filing of an appropriate oath or declaration by you pursuant to 37 C.F.R. § 1.63.

Telephone inquiries regarding this communication should be directed to Petitions Attorney Charlema R. Grant at (571) 272-3215. Requests for information regarding your application should be directed to the File Information Unit at (703) 308-2733. Information regarding how to pay for and order a copy of the application, or a specific paper in the application, should be directed to Certification Division at (703) 308-9726 or 1-800-972-6382 (outside the Washington D.C. area).

Charlema R. Grant
Petitions Attorney
Office of Petitions

BERLEX BIOSCIENCES
PATENT DEPARTMENT
2600 HILLTOP DRIVE
P.O. BOX 4099
RICHMOND CA 94804-0099

ATTN: ANNA GIL

UNITED STATES PATENT AND TRADEMARK OFFICE

Technology Center 1700

Mailed: 1-3-06

MEB
Paper Number:

In re application of
Dany Felix Maria Michiels
Serial No. 10/815,343
Filed: April 1, 2004
For: Composite Article And Its Manufacture

DECISION ON PETITION

This is a response to the PETITION TO WITHDRAW ABANDONMENT, filed October 14, 2005. The petition requests that the abandonment, as set forth in the Notice of Abandonment of October 7, 2005, for failure to timely reply to the Office Action of May 3, 2005 be withdrawn. The petitioner asserts that the response was timely filed on October 3, 2005 and that the time period for responding to the Office Action had not yet expired before the Notice of Abandonment was issued.

DECISION

The instant request is accepted as a timely petition under 37 C.F.R. 1.181 (no fee), and is evaluated under the procedures regarding a Petition To Withdraw Holding of Abandonment Based on Evidence That a Reply Was Timely Mailed or Filed.

Upon further review of the Office's records, the applicant's response to the Office Action of May 3, 2005 was timely received by the Office on October 3, 2005. Therefore, the Notice of Abandonment is hereby withdrawn. The application will be forwarded to the examiner for processing and consideration of the papers filed October 3, 2005.

The Petition is **Granted**.

UNITED STATES PATENT AND TRADEMARK OFFICE

Technology Center 1700

Jacqueline M. Stone

Jacqueline Stone, Director
Technology Center 1700
Chemical and Materials Engineering

Charlotte C. Wilson
Legal Department
Milliken & Company
920 Milliken Road, M-495
Post Office Box 1926
Spartanburg, SC 29304

UNITED STATES PATENT AND TRADEMARK OFFICE

Commissioner for Patents
United States Patent and Trademark Office
P.O. Box 1450
Alexandria, VA 22313-1450
www.uspto.gov

COPY MAILED

JUN 18 2007

OFFICE OF PETITIONS

MORRISON & FOERSTER LLP
1650 TYSONS BOULEVARD
SUITE 400
MCLEAN VA 22102

In re Application of

SIBBETT, Scott et al.
Application No. 10/815,346
Filed: March 31, 2004
Attorney Docket No.

DECISION ON PETITION
TO WITHDRAW
FROM RECORD

This is a decision on the Request to Withdraw as attorney or agent of record under 37 C.F.R. § 1.36(b), filed April 06, 2007.

The request is **APPROVED**.

A grantable request to withdraw as attorney/agent of record must be signed by every attorney/agent seeking to withdraw or contain a clear indication that one attorney is signing on behalf of another/others. A request to withdraw will not be approved unless at least 30 (thirty) days would remain between the date of approval and the later of the expiration date of a time to file a response or the expiration date of the maximum time period which can be extended under 37 C.F.R. § 1.136(a).

The request was signed by Peter J. Davis on behalf of all attorneys of record who are associated. All attorneys/agents associated have been withdrawn. Applicant is reminded that there is no attorney of record at this time.

The request to change the correspondence of record is not acceptable as the requested correspondence address is not that of: (1) the first named signing inventor; or (2) an intervening assignee of the entire interest under 37 C.F.R 3.71. All future communications from the Office will be directed to the first named signing inventor at the first copied address below until otherwise properly notified by the applicant.

There is an outstanding Office action mailed June 11, 2007 that requires a reply from the applicant.

Telephone inquiries concerning this decision should be directed to Tredelle Jackson at 571-272-2783.

Monica A. Graves
Petitions Examiner
Office of Petitions

cc: **SCOTT SIBBETT**
P.O. BOX 2571
CORRALES, NM 87048

cc: **RAJ S. DAVE, PH.D.**
DARBY & DARBY P.C.
1500 K STREET, N.W.
WASHINGTON, DC 20005-1714

UNITED STATES PATENT AND TRADEMARK OFFICE

Commissioner for Patents
United States Patent and Trademark Office
P.O. Box 1450
Alexandria, VA 22313-1450
www.uspto.gov

RAJ S. DAVE
MORRISON & FOERSTER LLP
SUITE 300
1650 TYSONS BLVD.
MCLEAN VA 22102

COPY MAILED

JUL 16 2007

OFFICE OF PETITIONS

In re Application of	:	
SIBBETT, Scott et al.	:	
Application No. 10/815,346	:	DECISION ON PETITION
Filed: March 31, 2004	:	TO WITHDRAW
Attorney Docket No. **INTEL1540 (P18529)**	:	FROM RECORD
	:	

This is a decision on the Request to Withdraw as attorney or agent of record under 37 C.F.R. § 1.36(b), filed April 06, 2007.

The request is **APPROVED**.

A grantable request to withdraw as attorney/agent of record must be signed by every attorney/agent seeking to withdraw or contain a clear indication that one attorney is signing on behalf of another/others. A request to withdraw will not be approved unless at least 30 (thirty) days would remain between the date of approval and the later of the expiration date of a time to file a response or the expiration date of the maximum time period which can be extended under 37 C.F.R. § 1.136(a).

The request was signed by Peter J. Davis on behalf of all attorneys of record. Applicant is reminded that there is no attorney of record at this time.

The request to change the correspondence of record is not acceptable as the requested correspondence address is not that of: (1) the first named signing inventor; or (2) an intervening assignee of the entire interest under 37 C.F.R 3.71. All future communications from the Office will be directed to the first named signing inventor at the first copied address below until otherwise properly notified by the applicant.

Telephone inquiries concerning this decision should be directed to Tredelle Jackson at 571-272-2783.

Monica A. Graves
Petitions Examiner
Office of Petitions

cc: **SCOTT SIBBETT**
P.O. BOX 2571
CORRALES, NM 87048

cc: **RAJ S. DAVE**
DARBY & DARBY P.C.
1500 K STREET, N.W.
SUITE 250
WASHINGTON, DC 20005-1714

SPE RESPONSE FOR CERTIFICATE OF CORRECTION

Paper No.: _____

DATE : 9-9-07

TO SPE OF : **Technology Center** 2827

10/815370

SUBJECT : Request for Certificate of Correction on Patent No.: 7158411 B2

A response is requested with respect to the accompanying request for a certificate of correction.

Please complete this form and return with file, within 7 days to:
Palm location **7580, Certificates of Correction Branch – South Tower – 9A22**
If response is for an IFW, **return to employee (named below) via PUBSCofC Team in MADRAS.**
With respect to the change(s) requested, correcting Office and/or Applicant's errors, should the patent read as shown in the certificate of correction (COCIN)? No new matter should be introduced, nor should the scope or meaning of the claims be changed.

Thank You For Your Assistance

Elisha Evans
Certificates of Correction Branch
Tel. No. 703-308-9390 EXT 110

The request for issuing the above-identified correction(s) is hereby:
Note your decision on the appropriate box.

- ☒ **Approved** TP — **All** changes apply.
- ☐ **Approved in Part** — Specify below which changes **do not** apply.
- ☐ **Denied** — State the reasons for denial below.

Comments:

_____

_____

_____

_____

_____

SPE _____ 2827 **Art Unit**

UNITED STATES PATENT AND TRADEMARK OFFICE

COMMISSIONER FOR PATENTS
UNITED STATES PATENT AND TRADEMARK OFFICE
P.O. BOX 1450
ALEXANDRIA, VA 22313-1450
www.uspto.gov

Pfiizer Corporation Patent Department
P. O. Box 1027
St. Louis, MO 63006

COPY MAILED

APR 29 2005

OFFICE OF PETITIONS

In re Application of	:	
Ronald Keith Webber, et al.	:	
Application No. 10/815,375	:	ON PETITION
Filed: April 1, 2004	:	
Attorney Docket No. S03300/1B/US	:	

This is a decision on the petition under 37 CFR 1.137(b), filed March 11, 2005, to revive the above-identified application.

The petition is **GRANTED**.

A "Notice of Allowance and Issue Fee Due" was mailed to applicant on November 16, 2004, which set a three-month shortened statutory period for reply. Since the issue fee was not timely paid, the application became abandoned on February 17, 2005.

The Office acknowledges receipt of the issue fee, which was submitted with the instant petition.

Telephone inquiries concerning this decision should be directed to the undersigned at (571) 272-3223.

The application file is being referred to the Publishing Division to be processed into a patent.

Marianne E. Jenkins
Petitions Examiner
Office of Petitions
Office of the Deputy Commissioner
for Patent Examination Policy

UNITED STATES PATENT AND TRADEMARK OFFICE

UNITED STATES DEPARTMENT OF COMMERCE
United States Patent and Trademark Office
Address: COMMISSIONER FOR PATENTS
P.O. Box 1450
Alexandria, Virginia 22313-1450
www.uspto.gov

APPL NO.	FILING OR 371 (c) DATE	ART UNIT	FIL FEE REC'D	ATTY.DOCKET NO	DRAWINGS	TOT CLMS	IND CLMS
10/815,379	03/31/2004	2652	986	12553/128	28	13	4

CONFIRMATION NO. 8257

UPDATED FILING RECEIPT

OC000000013367815

KENYON & KENYON
Suite 600
333 W. San Carlos, Street
San Jose, CA 95110-2711

Date Mailed: 07/29/2004

Receipt is acknowledged of this regular Patent Application. It will be considered in its order and you will be notified as to the results of the examination. Be sure to provide the U.S. APPLICATION NUMBER, FILING DATE, NAME OF APPLICANT, and TITLE OF INVENTION when inquiring about this application. Fees transmitted by check or draft are subject to collection. Please verify the accuracy of the data presented on this receipt. **If an error is noted on this Filing Receipt, please write to the Office of Initial Patent Examination's Filing Receipt Corrections, facsimile number 703-746-9195. Please provide a copy of this Filing Receipt with the changes noted thereon. If you received a "Notice to File Missing Parts" for this application, please submit any corrections to this Filing Receipt with your reply to the Notice. When the USPTO processes the reply to the Notice, the USPTO will generate another Filing Receipt incorporating the requested corrections (if appropriate).**

Applicant(s)

Naoto Matono, Saku-City, JAPAN;

Domestic Priority data as claimed by applicant

Foreign Applications

JAPAN JP2003-096742 03/31/2003

If Required, Foreign Filing License Granted: 06/17/2004

Projected Publication Date: 11/04/2004

Non-Publication Request: No

Early Publication Request: No

Title

Thin film magnetic head and method of manufacturing the same

Preliminary Class

360

LICENSE FOR FOREIGN FILING UNDER
Title 35, United States Code, Section 184
Title 37, Code of Federal Regulations, 5.11 & 5.15

GRANTED

The applicant has been granted a license under 35 U.S.C. 184, if the phrase "IF REQUIRED, FOREIGN FILING LICENSE GRANTED" followed by a date appears on this form. Such licenses are issued in all applications where the conditions for issuance of a license have been met, regardless of whether or not a license may be required as set forth in 37 CFR 5.15. The scope and limitations of this license are set forth in 37 CFR 5.15(a) unless an earlier license has been issued under 37 CFR 5.15(b). The license is subject to revocation upon written notification. The date indicated is the effective date of the license, unless an earlier license of similar scope has been granted under 37 CFR 5.13 or 5.14.

This license is to be retained by the licensee and may be used at any time on or after the effective date thereof unless it is revoked. This license is automatically transferred to any related applications(s) filed under 37 CFR 1.53(d). This license is not retroactive.

The grant of a license does not in any way lessen the responsibility of a licensee for the security of the subject matter as imposed by any Government contract or the provisions of existing laws relating to espionage and the national security or the export of technical data. Licensees should apprise themselves of current regulations especially with respect to certain countries, of other agencies, particularly the Office of Defense Trade Controls, Department of State (with respect to Arms, Munitions and Implements of War (22 CFR 121-128)); the Office of Export Administration, Department of Commerce (15 CFR 370.10 (j)); the Office of Foreign Assets Control, Department of Treasury (31 CFR Parts 500+) and the Department of Energy.

NOT GRANTED

No license under 35 U.S.C. 184 has been granted at this time, if the phrase "IF REQUIRED, FOREIGN FILING LICENSE GRANTED" DOES NOT appear on this form. Applicant may still petition for a license under 37 CFR 5.12, if a license is desired before the expiration of 6 months from the filing date of the application. If 6 months has lapsed from the filing date of this application and the licensee has not received any indication of a secrecy order under 35 U.S.C. 181, the licensee may foreign file the application pursuant to 37 CFR 5.15(b).

UNITED STATES PATENT AND TRADEMARK OFFICE

Commissioner for Patents
United States Patent and Trademark Office
P.O. Box 1450
Alexandria, VA 22313-1450
www.uspto.gov

CYMER INC
LEGAL DEPARTMENT
17075 Thornmint Court
SAN DIEGO CA 92127-2413

COPY MAILED

NOV 0 6 2008

OFFICE OF PETITIONS

In re Application of	:	
William N. Partlo, et al.	:	
Application No. 10/815,387	:	DECISION GRANTING PETITION
Filed: March 31, 2004	:	UNDER 37 CFR 1.313(c)(2)
Attorney Docket No. 2003-0092-01	:	

This is a decision on the petition under 37 CFR 1.313(c)(2), filed November 5, 2008, to withdraw the above-identified application from issue after payment of the issue fee.

The petition is **GRANTED**.

The above-identified application is withdrawn from issue for consideration of a submission under 37 CFR 1.114 (request for continued examination). *See* 37 CFR 1.313(c)(2).

Petitioner is advised that the issue fee paid on October 14, 2008 cannot be refunded. If, however, this application is again allowed, petitioner may request that it be applied towards the issue fee required by the new Notice of Allowance.[1]

Telephone inquiries should be directed to Terri Williams at (571) 272-2991.

This application is being referred to Technology Center AU 2828 for processing of the request for continued examination under 37 CFR 1.114 and for consideration of the concurrently filed amendment.

Terri Williams

Terri Williams
Petitions Examiner
Office of Petitions

---

[1] *The request to apply the issue fee to the new Notice may be satisfied by completing and returning the new Part B – Fee(s) Transmittal Form (along with any balance due at the time of submission). Petitioner is advised that the Issue Fee Transmittal Form* ***must*** *be completed and timely submitted to avoid abandonment of the application.*

UNITED STATES PATENT AND TRADEMARK OFFICE

Commissioner for Patents
United States Patent and Trademark Office
P.O. Box 1450
Alexandria, VA 22313-1450
www.uspto.gov

Paper No.

FLIESLER MEYER LLP
650 CALIFORNIA STREET
14TH FLOOR
SAN FRANCISCO CA 94108

MAILED

JUL 13 2010

OFFICE OF PETITIONS

In re Patent No. 7,639,839	:	DECISION ON REQUEST
Chiu et al.	:	FOR
Issue Date: 12/29/2009	:	RECONSIDERATION OF
Application No. 10/815389	:	PATENT TERM ADJUSTMENT
Filed: 03/31/2004	:	and
Atty Docket No.	:	NOTICE OF INTENT TO ISSUE
FXPL-01093US0	:	CERTIFICATE OF CORRECTION

This is a decision on the petition filed under 37 CFR 1.705(d) on January 28, 2010, requesting that the patent term adjustment indicated on the above-identified patent be corrected to indicate that the term of the above-identified patent is extended or adjusted by one thousand one hundred fifty-one (1151) days. For the reasons stated below, the petition is treated as requesting that the patent term adjustment indicated on the above-identified patent be corrected to indicate that the term of the above-identified patent is extended or adjusted by one thousand one hundred forty-nine (1149) days.

The petition to correct the patent term adjustment indicated on the above-identified patent to indicate that the term of the above-identified patent is extended or adjusted by one thousand one hundred forty-nine (1149) days is **GRANTED to the extent indicated herein.**

As the period from the filing date of the request for continued examination (RCE) to the issue date of the patent is not included in the "B" delay period, the over three year period begins on April 1, 2007, and ends on June 23, 2008, the day before the RCE was filed, and is 480 (not 481) days. See 35 U.S.C. 154(b)(1)(B)(i). Furthermore, the overlapping period from April 1, 2007, to November 13, 2007, the date the first Office action was mailed, is 227 days, not 226 days as asserted by patentees. Accordingly, the patent term adjustment is 1149

days (896 days of Office delay + 480 years of over three years delay - 227 days overlap - 0 days of applicant delay).

The Office will *sua sponte* issue a certificate of correction. Pursuant to 37 CFR 1.322, the Office will not issue a certificate of correction without first providing assignee or patentee an opportunity to be heard. Accordingly, patentees are given **one (1) month or thirty (30) days**, whichever is longer, from the mail date of this decision to respond. No extensions of time will be granted under § 1.136.

Nothing in this decision shall be construed as a waiver of the requirement of 35 U.S.C. 154(b)(4) that any civil action by an applicant dissatisfied with a determination made by the Director under 35 U.S.C. 154(b)(3) be filed in the United States District Court for the District of Columbia within 180 days after the grant of the patent.

The application is being forwarded to the Certificates of Correction Branch for issuance of a certificate of correction. The Office will issue a certificate of correction indicating that the term of the above-identified patent is extended or adjusted by **one thousand one hundred forty-nine (1149)** days.

Telephone inquiries specific to this matter should be directed to the undersigned at (571) 272-3231.

D Wood

Douglas I. Wood
Senior Petitions Attorney
Office of Petitions

Enclosure: Copy of DRAFT Certificate of Correction

UNITED STATES PATENT AND TRADEMARK OFFICE

CERTIFICATE OF CORRECTION

PATENT : 7,639,839 B2

DATED : **Dec. 29, 2009** **DRAFT**

INVENTOR(S) : Chiu et al.

It is certified that error appears in the above-identified patent and that said Letters Patent is hereby corrected as shown below:

On the cover page,

[*] Notice: Subject to any disclaimer, the term of this patent is extended or adjusted under 35 USC 154(b) by 896 days.

Delete the phrase "by 896 days" and insert – by 1149 days--

UNITED STATES PATENT AND TRADEMARK OFFICE

Commissioner for Patents
United States Patent and Trademark Office
P.O. Box 1450
Alexandria, VA 22313-1450
www.uspto.gov

DAVID M. THIMMIG
MAYER BROWN ROWE & MAW LLP
P.O. BOX 2828
CHICAGO, IL 60690-2828

COPY MAILED

JUL 2 0 2007

OFFICE OF PETITIONS

In re Application of	:	
Marcus Braun	:	
Application No. 10/815,395	:	ON PETITION
Filed: April 1, 2004	:	
Attorney Docket No. 04265398		

This is a decision on the petition, filed July 19, 2007 under 37 CFR 1.313(c)(2) to withdraw the above-identified application from issue after payment of the issue fee.

The petition is **GRANTED**.

The above-identified application is withdrawn from issue for consideration of a submission under 37 CFR 1.114 (request for continued examination). See 37 CFR 1.313(c)(2).

Petitioner is advised that the issue fee paid on June 25, 2007 in the above-identified application cannot be refunded. If, however, the above-identified application is again allowed, petitioner may request that it be applied towards the issue fee required by the new Notice of Allowance.[1]

Telephone inquiries should be directed to Irvin Dingle at (571) 272-3210.

This matter is being referred to Technology Center AU 3739 for processing of the request for continued examination under 37 CFR 1.114 and for consideration of the concurrently filed Information Disclosure Statement.

Irvin Dingle
Petitions Examiner
Office of Petitions

---

[1] The request to apply the issue fee to the new Notice may be satisfied by completing and returning the new Issue Fee Transmittal Form PTOL-85(b), which includes the following language thereon: Commissioner for Patents is requested to apply the Issue Fee and Publication Fee (if any) or re-apply any previously paid issue fee to the application identified above. Petitioner is advised that, whether a fee is indicated as being due or not, the Issue Fee Transmittal Form **must** be completed and timely submitted to avoid abandonment. Note the language in bold text on the first page of the Notice of Allowance and Fee(s) Due (PTOL-85).

UNITED STATES PATENT AND TRADEMARK OFFICE

Commissioner for Patents
United States Patent and Trademark Office
P.O. Box 1450
Alexandria, VA 22313-1450
www.uspto.gov

COPY MAILED
JUL 20 2007
OFFICE OF PETITIONS

Date : July 20, 2007

TO : Director, Office of Patent Publication

FROM : Office of the Deputy Commissioner for Patent Examination Policy

SUBJECT : Withdrawal from Issue of Application No. 10/815,395

Applicant(s) : Marcus Braun
Application No. : 10/815,395
Filed : April 1, 2004

The above-identified application has been assigned Patent No. 7,250,044 and an issue date of July 31, 2007.

It is hereby directed that this application be withdrawn from issue at the request of the applicant.

Do not refund the issue fee.

The following erratum should be published in the Official Gazette if the above-identified application is published in the OG of: July 31, 2007.

> "All reference to Patent No. 7,250,044 to Marcus Braun of Germany for SURGICAL INSTRUMENT appearing in the Official Gazette of July 31, 2007 should be deleted since no patent was granted."

Irvin Dingle
Petitions Examiner
Office of Petitions

cc: Paul Harrison
Deneise Boyd
Mary Louise McAskill
Niomi Farmer
Mary E. Johnson (Cookie)
Duane Davis
Brad Harris
Kim Terrell
Kay Pinkney
Betty Powell

UNITED STATES PATENT AND TRADEMARK OFFICE

Commissioner for Patents
United States Patent and Trademark Office
P.O. Box 1450
Alexandria, VA 22313-1450
www.uspto.gov

MAILED
JUN 08 2010
OFFICE OF PETITIONS

N. KENNETH BURRASTON
KIRTON & MCCONKIE
P.O. BOX 45120
SALT LAKE CITY UT 84145-0120

In re Application of	:	
Eldridge, et al.	:	
Application No. 10/815,400	:	DECISION ON PETITION
Filed: March 31, 2004	:	
Attorney Docket No. **P71C2-US**	:	

This is a decision on the petition under 37 CFR 1.137(b), filed March 23, 2010, to revive the above-identified application.

The petition is **GRANTED**.

The above-cited application became abandoned for failure to file a proper reply to the final Office action mailed September 14, 2009, which set a three (3) month shortened statutory period for reply. The application became abandoned on December 15, 2009. A Notice of Abandonment was mailed on March 23, 2010.

The Notice of Appeal, filed March 23, 2010, has been entered and made of record. Accordingly, the two-month period for filing an appeal brief (accompanied by the fee required by 37 CFR 1.17(c)) runs from the date of this decision.

The application file is being forwarded to Technology Center28, GAU 2829 for further processing.

Telephone inquiries concerning this decision should be directed to the undersigned at (571) 272-3222.

Kenya A. McLaughlin
Petitions Attorney
Office of Petitions

SPE RESPONSE FOR CERTIFICATE OF CORRECTION

Paper No.:200908311

DATE : August 31, 2009

TO SPE OF : ART UNIT 2816

SUBJECT : Request for Certificate of Correction on Patent No.: 7167032

A response is requested with respect to the accompanying request for a certificate of correction.

Please complete this form and return with file, within **7** days to:
Certificates of Correction Branch - PK 3-910
Palm location **7590** - Tel. No. 305-8201

With respect to the change(s) requested, correcting Office and/or Applicant's errors, should the patent read as shown in the certificate of correction? No new matter should be introduced, nor should the scope or meaning of the claims be changed.

Thank You For Your Assistance **Certificates of Correction Branch**

The request for issuing the above-identified correction(s) is hereby:
Note your decision on the appropriate box.

☒ **Approved** **All** changes apply.

☐ **Approved in Part** Specify below which changes **do not** apply.

☐ **Denied** State the reasons for denial below.

Comments:

SPE: /Donovan Lincoln/ **Art Unit** 2816

UNITED STATES PATENT AND TRADEMARK OFFICE

Commissioner for Patents
United States Patent and Trademark Office
P.O. Box 1450
Alexandria, VA 22313-1450
www.uspto.gov

October 24, 2007

Patent No. : 7095212 B2
Ser. No. : 10/815444
Inventor(s) : Sudo et al.
Issued : Aug. 22, 2006
Title : **BATTERY PACK WITH A REMAINING BATTERY POWER CALCULATING FUNCTION**
Docket No. : S004-5258

Re: Request for Certificate of Correction

Consideration has been given your request for the issuance of a certificate of correction for the above-identified patent under the provisions of Rules 1.322 and 1.323.

A petition under C.F.R. 1.182 is required to correct errors in spelling or order of inventors names or addresses, since inventor's names or addresses are printed solely in accordance with the type-written names and address and in the order of the type- written names and address on the Declaration, and since the error was the result of applicant's failure to comply with the requirement that the complete and correct names and addresses in correct order be indicated on the Declaration of Oath, no correction is in order here under the provisions of Rules 1.323, unless a petition is granted.

In view of the foregoing, your request is hereby denied.

However, a petition under 37 CFR 1.182 should be directed to the attention of the Assistant Commissioner for Patents using the following mailing address or FAX number.

By Mail: Commissioner of Patents and Trademarks
P.O. Box 1450
Alexandria, VA 22313-1450

By Fax: (571) 273-8300
Attn: Office of Petitions

Further correspondence concerning this matter should be filed and directed to Decisions

and Certificates of Correction Branch.

Elisha Evans
Cecelia Newman, Supervisor
Decisions & Certificates
of Correction Branch
703 308- 9390 EXT. 110

ADAMS & WILKS
17 BATTERY PLACE
SUITE 1231
NEW YORK NY 10004

CBN/eme

UNITED STATES PATENT AND TRADEMARK OFFICE

Commissioner for Patents
United States Patent and Trademark Office
P.O. Box 1450
Alexandria, VA 22313-1450
www.uspto.gov

COPY MAILED

SEP 2 3 2004

OFFICE OF PETITIONS

Friedrich Kueffner
Suite 910
317 Madison Avenue
New York, NY 10017

In re Application of
Rzesnitek, Schmitt, and Reuter
Application No. 10/815,455
Filed: March 31, 2004
Attorney Docket No. BE-125
For: MONITORING SYSTEM FOR MONITORING THE PROGRESS OF NEUROLOGICAL DISEASES

: DECISION REFUSING STATUS
: UNDER 37 CFR 1.47(a)

This is a decision on the petition under 37 CFR 1.47(a) August 20, 2004

The petition under 37 CFR 1.47(a) is **dismissed.**

Any request for reconsideration under this decision must be submitted within TWO (2) MONTHS from the mail date of this decision. Extensions of time under 37 CFR 1.136(a) are permitted. Failure to respond will result in the abandonment of this application. Any response should be titled "Request for Reconsideration of Petition Under 37 CFR 1.47(a).

The above-identified application was filed on March 31, 2004, and was not accompanied by a properly executed oath or declaration and filing fee. On June 17, 2004, a Notice to File Missing Parts of Nonprovisional Application was mailed requiring an executed oath or declaration, payment of the filing fee, payment of surcharge, and payment of the fee associated with the filing of a specification written in a language other than English. The notice allowed an extendable period for reply of two months from its mailing date. The instant petition was filed on August 20, 2004, with a certificate of mailing dated August 18, 2004.

A grantable petition under 37 CFR 1.47(a) requires:

(1) proof that the non-signing inventor(s) cannot be reached or refuses to sign the oath or declaration after having been presented with the application papers (specification, claims, and drawings);

(2) an acceptable oath or declaration in compliance with 35 U.S.C. §§ 115 and 116;

(3) the petition fee,

(4) a statement of the last known address of the non-signing inventor,

The instant petition lacks item (1) above.

As to item (1) sufficient proof was not provided that the entire application was sent to the non-signing inventor, not just the declaration and power of attorney. Guidance as to what is required to be sent to the non-signing before a refusal to sign can be alleged is found in the Manual of Patent Examining Procedure, Section 409.03(d) which reads, in pertinent part:

> [b]efore a refusal can be alleged, it must be demonstrated that a bona fide attempt was made to present a copy of the application papers (specification, including claims, drawings, and oath or declaration) to the non-signing inventor.

It is not apparent from the instant petition whether petitioner sent the non-signing inventor the entire application for his review and signature. Further, the copies of the cover letters for the correspondence petitioner sent to the non-signing inventor makes no mention of the entire application being enclosed. It is, therefore, concluded that item (1) above has not been satisfied.

Petitioner is advised that an extension of time within the first month is necessary in order for the instant petition to be considered a timely response to the Notice to File Missing Parts of Nonprovisional Application. The notice allowed an extendable period for response of two months from its mailing date—June 17, 2004. The instant petition was not received until August 20, 2004, and the certificate of mailing was dated August 18, 2004. Any renewed petition filed must be accompanied by a request for an extension of time within the first month and the fee, or an authorization to charge a deposit account for the fee.

Further correspondence with respect to this matter should be addressed as follows:

By mail: Mail Stop Petitions
Commissioner for Patents,
PO Box 1450
Alexandria, VA 22313-1450

By FAX: (703) 872-9306
Attn: Office of Petitions

Telephone inquiries should be directed to the undersigned (703) 305-0010.

Kenya A. McLaughlin

Kenya A. McLaughlin
Petitions Attorney
Office of Petitions

UNITED STATES PATENT AND TRADEMARK OFFICE

Commissioner for Patents
United States Patent and Trademark Office
P.O. Box 1450
Alexandria, VA 22313-1450
www.uspto.gov

FRIEDRICH KUEFFNER
SUITE 910
317 MADISON AVENUE
NEW YORK, NY 10017

COPY MAILED

JUL 16 2008

OFFICE OF PETITIONS

In re Application of :
Alexander Rzesnitzek et al :
Application No. 10/815,455 :
Filed: March 31, 2004 :
Attorney Docket No. BE-125 :

ON PETITION

This is a decision on the petition under 37 CFR 1.137(b), filed April 4, 2008, to revive the above-identified application.

The petition is **GRANTED**.

The above-identified application became abandoned for failure to reply in a timely manner to the non-final Office action mailed June 18, 2007, which set a shortened statutory period for reply of three (3) months. No extension of time under the provisions of 37 CFR 1.136(a) were obtained. Accordingly, the above-identified application became abandoned on September 19, 2007.

Telephone inquiries concerning this decision should be directed to Irvin Dingle at (571) 272-3210.

This matter is being referred to Technology Center AU 3736 for further processing.

Irvin Dingle
Petitions Examiner
Office of Petitions

UNITED STATES PATENT AND TRADEMARK OFFICE

COMMISSIONER FOR PATENTS
UNITED STATES PATENT AND TRADEMARK OFFICE
P.O. BOX 1450
ALEXANDRIA, VA 22313-1450
www.uspto.gov

Paper No.

TOWNSEND AND TOWNSEND
AND CREW, LLP
2 EMBARCADERO CENTER
8TH FLOOR
SAN FRANCISCO CA 94111

COPY MAILED
FEB 17 2009
OFFICE OF PETITIONS

In re Application of	:	
Karen Young	:	
Application No. 10/815,480	:	ON APPLICATION FOR
Filed: March 31, 2004	:	PATENT TERM ADJUSTMENT
Atty Docket No.022101-000230US	:	

This is in response to the REQUEST FOR RECONSIDERATION OF PATENT TERM ADJUSTMENT DETERMINATION UNDER 37 C.F.R. §1.705(b) filed January 6, 2009. Applicant requests that the determination of patent term adjustment be corrected from thirty-six (36) days to, at minimum, nine hundred thirteen (913) days, with an additional term to be added if the patent issues after April 21, 2009. Applicant requests this correction in part on the basis that the Office will take in excess of three years to issue this patent.

To the extent that the instant application for patent term adjustment requests reconsideration of the patent term adjustment as it relates to the Office's failure to issue the patent within 3 years of the filing date, a decision is being **held in abeyance** until after the actual patent date. Knowledge of the actual date the patent issues is required to calculate the amount, if any, of additional patent term patentee is entitled to for Office failure to issue the patent within 3 years. See § 1.703(b).

Applicant is given TWO (2) MONTHS from the issue date of the patent to file a written request for reconsideration of the patent term adjustment for Office failure to issue the patent

within 3 years. A copy of this decision should accompany the request. Applicant may seek such consideration without payment of an additional fee. However, as to all other bases for seeking reconsideration of the patent term adjustment indicated in the patent, all requirements of § 1.705(d) must be met. Requests for reconsideration on other bases must be timely filed and must include payment of the required fee.

Rather than file the request for reconsideration of Patent Term Adjustment at the time of the mailing of the notice of allowance, applicant is advised that they may wait until the time of the issuance of the patent and file a request for reconsideration of the patent term pursuant to 37 CFR 1.705(d). The USPTO notes that it does not calculate the amount of time earned pursuant to 37 CFR 1.702(b) until the time of the issuance of the patent and accordingly, the Office will consider any request for reconsideration of the patent term adjustment due to an error in the calculation of 37 CFR 1.702(b) to be timely if the request for reconsideration is filed within two months of the issuance of the patent.

To the extent that applicant otherwise requests correction of the initial determination of patent term adjustment at the time of mailing of the notice of allowance, the application for patent term adjustment is **DISMISSED**.

On October 9, 2008, the Office mailed the Determination of Patent Term Adjustment under 35 U.S.C. 154(b) in the above-identified application. The Notice stated that the patent term adjustment to date is 36 days. The instant application for patent term adjustment was timely filed[1] on or before payment of the issue fee. In effect, applicant disputes the period of adjustment of 104 days entered pursuant to 37 CFR §§1.702(a)(1) and 1.703(a)(1) for Office delay in taking until September 12, 2005 to mail the first Office action (14 months and 104 days after the actual filing date of the application, March 31, 2004). Applicant states that the period of adjustment is 252 days computed based on the mailing of the 1st restriction requirement on February 7, 2006, as this restriction requirement states on page 2 that it replaces the previous restriction requirement.

[1] PALM records indicate that the issue fee was paid on January 6, 2009.

Applicant further states that the patent issuing from the application is not subject to a terminal disclaimer.

RELEVANT STATUTES AND REGULATIONS

35 U.S.C. 154(b)(1)(A)(i) provides that:

— Subject to the limitations under paragraph (2), if the issue of an original patent is delayed due to the failure of the Patent and Trademark Office to—

(i) provide at least one of the notifications under section 132 of this title or a notice of allowance under section 151 of this title not later than 14 months after—

(I) the date on which an application was filed under section 111(a) of this title; or
(II) the date on which an international application fulfilled the requirements of section 371 of this title;

37 CFR § 1.702 provides that:

(a) Failure to take certain actions within specified time frames . Subject to the provisions of 35 U.S.C. 154(b) and this subpart, the term of an original patent shall be adjusted if the issuance of the patent was delayed due to the failure of the Office to:

(1) Mail at least one of a notification under 35 U.S.C. 132 or a notice of allowance under 35 U.S.C. 151 not later than fourteen months after the date on which the application was filed under 35 U.S.C. 111(a) or fulfilled the requirements of 35 U.S.C. 371 in an international application;

37 CFR § 1.703 provides, in pertinent part, that:

(a) The period of adjustment under § 1.702(a) is the sum of the following periods:

(1) The number of days, if any, in the period beginning on the day after the date that is fourteen months after the date on which the application was filed under 35 U.S.C. 111(a) or fulfilled the requirements of 35 U.S.C. 371 and ending on the

date of mailing of either an action under 35 U.S.C. 132, or a notice of allowance under 35 U.S.C. 151, whichever occurs first;

OPINION

Applicant's arguments and evidence have been considered, in light of the application history, and it has been determined that the period of adjustment of 104 days for Office delay pursuant to 37 CFR 1.702(a)(1) is correct. It is undisputed that the Office mailed an action under 35 U.S.C. 132, a restriction requirement, on September 12, 2005, fourteen months and 104 days after the actual filing date of this application. The subsequent mailing of another Office action under 132 does not alter the date used in calculation of the period of adjustment. Pursuant to 35 U.S.C. 154(b)(1)(A), applicant is only entitled to day-to-day restoration of term lost as a result of delay created by the Office, after the first 14 months of pendency of the application before the Office, to the extent that the Office failed to make an objection or argument under 35 U.S.C. 132 until September 12, 2005. The fact that the Office later replaced the Office action does not negate the fact that the Office took action within the meaning of 37 CFR 1.702(a)(1) on September 12, 2005. Thus, it is correct for the Office to use the date of September 12, 2005 in calculating the period of adjustment due to the examination delay in initially acting on this application. See Changes to Implement Patent Term Adjustment under Twenty-Year Patent Term; Final Rule, 65 Fed. Reg. 54366 (September 18, 2000).

The Office acknowledges submission of the $200.00 fee set forth in 37 CFR 1.18(e). No additional fees are required.

In view thereof, the correct patent term adjustment at the mailing of the notice of allowance remains 36 days.

The application is being forwarded to the Office of Data Management for issuance of the patent. The patent term adjustment indicated on the patent (as shown on the Issue Notification mailed about three weeks prior to patent issuance) will include any additional adjustment accrued both for Office delay in issuing the patent more than four months after payment of the issue fee and satisfaction of all outstanding requirements, and for the Office taking in excess of three years to issue the patent (to the extent that the three-year period does not overlap with periods already accorded).

Telephone inquiries specific to this decision should be directed to the undersigned at (571) 272-3219.

Nancy Johnson
Senior Petitions Attorney
Office of Petitions

UNITED STATES PATENT AND TRADEMARK OFFICE

COMMISSIONER FOR PATENTS
UNITED STATES PATENT AND TRADEMARK OFFICE
P.O. BOX 1450
ALEXANDRIA, VA 22313-1450
www.uspto.go

MAILED

JUL - 1 2005

DIRECTOR'S OFFICE
TECHNOLOGY CENTER 2600

SUTHERLAND ASBILL & BRENNAN LLP
999 PEACHTREE STREET, N.E.
ATLANTA, GA 30309

In re application of:	:	
Eric A Kaltenbacher, et al.	:	
Application No. 10/815,489	:	DECISION ON REQUEST TO
Filed: April 1, 2004	:	WITHDRAW FROM RECORD
For: 3-D IMAGING SYSTEM	:	

This is a decision on the request for withdrawal as attorney/agent and change of correspondence address filed on May 13, 2005.

A grantable request to withdraw as attorney/agent of record must:
(1) indicate the present mailing address of the attorney(s)/agent(s) who seek(s) to withdraw, and
(2) be signed by each attorney/agent seeking to withdraw or clearly be signed on their behalf, and
(3) be *approved* at least thirty (30) days prior to the maximum extendable period for response to any outstanding Office Action, and
(4) indicate the address to which future correspondence should be mailed.

Petitioner has satisfied the requirements for successfully requesting withdrawal. Accordingly, the request is **GRANTED.**

All of the attorneys/agents associated with Customer Number 29052 have been withdrawn.

All future communications from the Office will be directed to the address listed below until otherwise notified by applicant. Applicant is reminded of the obligation to promptly notify the Patent and Trademark Office of any change in correspondence address to ensure receipt of all communications from the Office.

Kenneth A. Wieder
Special Program Examiner
Technology Center 2600
Communications
(571) 272-2986

cc: Valerie Landro McDevitt, Esq.
University of South Florida
3702 Spectrum boulevard, Suite 155
Tampa, Florida 33612-9445

UNITED STATES PATENT AND TRADEMARK OFFICE

COMMISSIONER FOR PATENTS
UNITED STATES PATENT AND TRADEMARK OFFICE
P.O. BOX 1450
ALEXANDRIA, VA 22313-1450
WWW.USPTO.GOV

Paper No. None

COPY MAILED

SEP 0 6 2005

OFFICE OF PETITIONS

Philip G. Meyers
Philip G. Meyers Law Firm
Suite 302
1009 Long Prairie Road
Flower Mound TX 75022

In re Application of	:	
Dale E. Redford et al.	:	
Application No. 10/815,491	:	DECISION ON PETITION
Filed: April 1, 2004	:	
Attorney Docket Number: 18525-0793	:	
Title: METHOD FOR PRIVATE DISTRIBUTION	:	
OF PRINTED ADVERTISING MATERIAL	:	

This is a decision on the petition filed August 17, 2005, requesting that the above-identified application be accorded a filing date of April 1, 2004, with Figures 4 and 5 as part of the original disclosure of the application.

The application was deposited April 1, 2004. However, on June 17, 2005, the Office of Initial Patent Examination (OIPE) mailed a notice stating that the application had been accorded a filing date of April 1, 2004, and that the application appeared to have been deposited without Figures 4 and 5. The notice set a two-month period for response.

With the present petition, Petitioner has submitted a copy of Figures 4 and 5 along with the petition fee[1]. Petitioner has indicated that set forth that the figures were submitted, and the "postcard accompanying the application has not been returned[2]."

1 Petitioner has submitted $130, when the petition fee due is $400. The difference has been charged to his Deposit Account, as authorized in the petition.
2 Petition, page 1.

THE RELEVANT SECTION OF THE MPEP

Section 503 of the MPEP, entitled Application Number and Filing Receipt, sets forth, in part:

RETURN POSTCARD

If a receipt of any item (e.g., paper or fee) filed in the USPTO is desired, it may be obtained by enclosing with the paper a self-addressed postcard specifically identifying the item. The USPTO will stamp the receipt date on the postcard and place it in the outgoing mail. A postcard receipt which itemizes and properly identifies the items which are being filed serves as prima facie evidence of receipt in the USPTO of all the items listed thereon on the date stamped thereon by the USPTO.

The identifying data on the postcard should be so complete as to clearly identify the item for which receipt is requested. For example, the postcard should identify the applicant's name, application number (if known), confirmation number (if known), filing date, interference number, title of the invention, etc. The postcard should also identify the type of paper being filed, e.g., new application, affidavit, amendment, notice of appeal, appeal brief, drawings, fees, motions, supplemental oath or declaration, petition, etc., and the number of pages being submitted. If a new application is being filed, all parts of the application being submitted should be separately listed on the postcard, e.g., the number of pages of specification (including written description, claims and abstract), number of claims, number of sheets of drawings, number of pages of oath/declaration, number of pages of cover sheet (provisional application).

The postcard receipt will not serve as prima facie evidence of receipt of any item which is not adequately itemized on the postcard. For example, merely listing on the postcard "a complete application" or "patent application" will not serve as a proper receipt for each of the required components of an application (e.g., specification (including claims), drawings (if necessary), oath or declaration and the application filing fee) or missing portions (e.g., pages, sheets of drawings) of an application if one of the components or portion of a component is found to be missing by the USPTO. Each separate component should be specifically and properly itemized on the postcard. Furthermore, merely incorporating by reference in the postcard receipt, the items listed in a transmittal letter will not serve as prima facie evidence of receipt of those items.

The person receiving the item(s) in the USPTO will check the listing on the postcard against the item(s) being filed to be sure they are properly identified and that all the items listed on the postcard are presently being submitted to the USPTO. If any of the items listed on the postcard are not being submitted to the USPTO, those items will be crossed off and the postcard initialed by the person receiving the items.

Upon return of a postcard receipt from the USPTO, the postcard receipt should be promptly reviewed by the person who filed the items to ensure that every item specifically denoted on the postcard was received by the USPTO. If the postcard receipt has been annotated to indicate that a particular item denoted on the postcard was not received by the USPTO, the postcard receipt will not serve as prima facie evidence of receipt of that item in the USPTO.

ANALYSIS

The PTO file is the official record of all papers filed in this application. It is noted that the electronic file contains 3 pages of drawings, consisting of Figures 1, 2, and 3. Figures 4 and 5 have not been located in the electronic file. Petitioner has asserted that these 2 figures were provided on filing, but his assertion is not more persuasive than the PTO file.

An applicant alleging that a paper was filed in the Office and later misplaced has the burden of proving the allegation by a preponderance of the evidence. The PTO has a well established and well publicized practice of providing a receipt for papers filed in the PTO to any applicant desiring a receipt. The practice requires that any paper for which a receipt is desired be filed in the PTO with a self-addressed postcard identifying the paper. A postcard receipt which *itemizes and properly identifies* the papers which are being filed serves as prima facie evidence of receipt

in the PTO of all the items listed thereon on the date stamped thereon by the PTO[3].

Unfortunately, Petitioner does not have a stamped copy of a postcard receipt to provide as evidence that these two figures were received on filing. It is clear is that Figures 4 and 5 did not make their way into the electronic file, and without a properly stamped and itemized postcard, Petitioner is unable to establish that Figures 4 and 5 were included on filing.

CONCLUSION

For these reasons, the petition is **DISMISSED**.

The petition fee of $400 will not be refunded, as this petition was not necessitated by any error on the part of the Office.

OIPE will process this application with a filing date of April 1, 2004, using only the application papers which were filed on that date. Figures 4 and 5 will not be entered.

If Petitioner desires for the Examiner to consider these pages which he cannot establish were submitted as part of the original disclosure, then he may submit them via an amendment. Any such amendment will, of course, be reviewed by the examiner for new matter[4].

Telephone inquiries regarding *this decision* should be directed to the undersigned at (571) 272-3225. All other inquiries concerning examination procedures or status of the application should be directed to the Technology Center.

Paul Shanoski
Senior Attorney
Office of Petitions
United States Patent and Trademark Office

3 See MPEP 503.
4 See MPEP 608.02(h) and 608.04.

UNITED STATES PATENT AND TRADEMARK OFFICE

Commissioner for Patents
United States Patent and Trademark Office
P.O. Box 1450
Alexandria, VA 22313-1450
www.uspto.gov

MORGAN & FINNEGAN, L.L.P.
3 WORLD FINANCIAL CENTER
NEW YORK, NY 10281-2101

COPY MAILED

OCT 2 4 2007

OFFICE OF PETITIONS

In re Application of	:	
Satoru Wakao	:	
Application No. 10/815,504	:	DECISION GRANTING PETITION
Filed: March 31, 2004	:	UNDER 37 CFR 1.313(c)(2)
Attorney Docket No. 1232-5362	:	

This is a decision on the petition under 37 CFR 1.313(c)(2), filed October 23, 2007, to withdraw the above-identified application from issue after payment of the issue fee.

The petition is **GRANTED**.

The above-identified application is withdrawn from issue for consideration of a submission under 37 CFR 1.114 (request for continued examination). *See* 37 CFR 1.313(c)(2).

Petitioner is advised that the issue fee paid on October 17, 2007 ***cannot be refunded. If, however, this application is again allowed, petitioner may request that it be applied towards the issue fee required by the new Notice of Allowance.***[1]

Telephone inquiries should be directed to the undersigned at (571) 272-3208.

This application is being referred to Technology Center AU 2624 for processing of the request for continued examination under 37 CFR 1.114 and for consideration of the concurrently filed IDS.

Karen Creasy

Karen Creasy
Petitions Examiner
Office of Petitions

[1] *The request to apply the issue fee to the new Notice may be satisfied by completing and returning the new Part B – Fee(s) Transmittal Form (along with any balance due at the time of submission). Petitioner is advised that the Issue Fee Transmittal Form* ***must*** *be completed and timely submitted to avoid abandonment of the application.*

UNITED STATES PATENT AND TRADEMARK OFFICE

Commissioner for Patents
United States Patent and Trademark Office
P.O. Box 1450
Alexandria, VA 22313-1450
www.uspto.gov

MORGAN & FINNEGAN, L.L.P.
3 WORLD FINANCIAL CENTER
NEW YORK NY 10281-2101

COPY MAILED

DEC 1 1 2008

OFFICE OF PETITIONS

In re Application of	:	
Toshiaki Iizuka	:	DECISION ON APPLICATION
Application No. 10/815,506	:	FOR
Filed: March 31, 2004	:	PATENT TERM ADJUSTMENT
Attorney Docket No. 1232-5364	:	

This is a decision on the "PETITION FOR RECONSIDERATION OF PATENT TERM ADJUSTMENT," filed July 28, 2008. Applicants request that the initial determination of patent term adjustment under 35 U.S.C. 154(b) be increased by one (1) day from one thousand (1000) days to one thousand one (1001) days.

The application for patent term adjustment is **DISMISSED**.

On July 10, 2008, the Office mailed the Determination of Patent Term Adjustment under 35 U.S.C. 154(b) in the above-identified application. The Notice stated that the patent term adjustment (PTA) to date is 1000 days. On July 28, 2008, applicants timely submitted the instant application for patent term adjustment[1].

Applicants dispute the reduction pursuant to § 1.704(b) of 1 day.

Applicants state that the application is not subject to a terminal disclaimer.

Applicants request the removal of the reduction of 1 day on the ground that the response to the Office action mailed February 26, 2008, was filed timely on May 27, 2008. Applicants assert, in essence, that the three (3) month shortened statutory period for response to the Office action of February 26, 2008, fell on a federal holiday, Monday, May 26, 2008, and therefore, they had

[1] PALM records show that the Issue Fee was received on July 29, 2008.

until the next succeeding business day, Tuesday, May 27, 2008, to file a timely response.[2]

Applicants were properly assessed a delay of 1 day for filing a response on May 27, 2008, to the Office action of February 26, 2008. Calculation of applicant's' delay is based on the date of receipt of the response in the Office. 35 U.S.C. § 154(b)(2)(C)(ii) does not require that a reply be filed in the Office within its three (3) month grace period, but simply specifies that there is a patent term adjustment reduction if a reply is not filed within this three (3) month period. Therefore, the "carry-over" provisions of 35 U.S.C. 21(b) does not apply to the three (3) month period in 35 U.S.C. 154(b)(2)(C)(ii).

In view thereof, the determination of patent term adjustment at the time of the mailing of the notice of allowance is 1000 days.

Receipt of the $200.00 fee set forth in 37 CFR 1.18(e) is acknowledged. No additional fees are required.

The application is being forwarded to the Office of Data Management for issuance of a patent. The patent term adjustment indicated on the patent (as shown on the Issue Notification mailed about three weeks prior to patent issuance) will include any additional adjustment accrued both for Office delay in issuing the patent more than four months after payment of the issue fee and satisfaction of all outstanding requirements, and for the Office taking in excess of three years to issue the patent (to the extent that the three-year period does not overlap with periods already accorded).

Telephone inquiries specific to this matter should be directed to Douglas I. Wood, Senior Petitions Attorney, at (571) 272-3231.

Nancy Johnson
Senior Petitions Attorney
Office of Petitions

---

[2] The petition references a reply filed on "Monday, May 27, 2008." While the reply was in fact filed on May 27, 2008, said date fell on a Tuesday. Rather, Monday, May 26, 2008, was a federal holiday.

UNITED STATES PATENT AND TRADEMARK OFFICE

Commissioner for Patents
United States Patent and Trademark Office
P.O. Box 1450
Alexandria, VA 22313-1450
www.uspto.gov

BOZICEVIC, FIELD & FRANCIS LLP
1900 UNIVERSITY AVENUE
SUITE 200
EAST PALO ALTO CA 94303

COPY MAILED
JUL 17 2006
OFFICE OF PETITIONS

In re Application of :
Yeates et al :
Application No. 10/815,543 :
Filed: March 31, 2004 :
Attorney Dkt. No: UCAL-135CIP :

ON PETITION

This is a decision on the petition under 37 CFR 1.181 to withdraw the holding of abandonment, filed April 5, 2005.

The petition to withdraw the holding of abandonment is **GRANTED**.

This above-identified application became abandoned for failure to file a response to a Notice to File Missing Parts which was mailed on June 14, 2004. The Notice to File Missing Parts set an extendable two (2) month period for reply. No timely request for extension of time was obtained under the provisions of 37 CFR §1.136(a). Accordingly, this application became abandoned on August 15, 2004. A Notice of Abandonment was mailed on March 15, 2005.

Petitioner maintains that a response to the Notice to File Missing Parts was sent via Express Mail on August 16, 2004 As evidence, petitioner has submitted a copy of a , Express Mail Label pursuant to 37 CFR 1.10, tracking data from the U.S. Postal Service, a transmittal form referencing the Express Mail label number and the response to the Notice, a fee transmittal form and a copy of the reply. It is further noted that the fee transmittal form contains a general authorization which would allow for the charging of the one month extension of time fee required.

The response submitted August 16, 2004 has not been located in the Office, however, in view of the evidence submitted, the response is deemed timely.

The Notice of Abandonment is hereby vacated and the holding of abandonment is withdrawn.

This application is being forwarded to the Office of Initial Patent Examination for further processing, including charging the required fees.

Telephone inquiries concerning this matter should be directed to the undersigned at (571) 272-3215.

Charlema R. Grant
Petitions Attorney
Office of Petitions

UNITED STATES PATENT AND TRADEMARK OFFICE

Commissioner for Patents
United States Patent and Trademark Office
P.O. Box 1450
Alexandria, VA 22313-1450
www.uspto.gov

FLYNN THIEL BOUTELL & TANIS, P.C.
2026 RAMBLING ROAD
KALAMAZOO MI 49008-1699

COPY MAILED

DEC 3 0 2004

OFFICE OF PETITIONS

In re Application of :
Christa Wohriska : DECISION GRANTED
Application No. 10/815,547 :
Deposited: April 1, 2004 :
Attorney Docket No.: RUFF CASE 28 :

This is a decision on the "Petition for Grant of Filing Date Under 37 CFR 1.53(e)" filed December 13, 2004, requesting that the above-identified application be accorded the filing date of April 1, 2004.

Application papers in the above-identified application were deposited on April 1, 2004. However, on October 14, 2004, the Office of Initial Patent Examination mailed a "Notice of Incomplete Nonprovisional Application", notifying applicants that the application papers had **not** been accorded a filing date because the application was deposited without drawings.[1]

In response, 3 sheets of drawings, including figures 1-8 and the present petition were filed on December 13, 2004. The petition contends that the application as filed included 3 sheets of drawings and were described in the original filed specification. In support, the petition is accompanied by a copy of applicant's postcard receipt which acknowledges receipt in the office of "Sheets of Drawings 3 " on April 1, 2004.

Applicant's postcard receipt is prima facie[2] evidence that

---

[1]See 35 U.S.C. 111(a)(4)

[2]A postcard receipt which itemizes and properly identifies the items which are being filed serves as prima facie evidence of

drawings were received on April 1, 2004, but no drawings are present in the file. Hence, it is clear that the papers for this application were mishandled by the Office. Therefore, it is concluded that 3 sheets of drawings, including figures 1-8, were received on April 1, 2004, as shown in counsel's file, and later misplaced in the Office.

The petition is Granted.

Since the original drawings cannot be located in the Office, the copy of the drawings supplied on December 13, 2004, will be used for processing and examination purposes.

Effective November 22, 2004, the petition fee to accord a filing date under 37 CFR 1.53 is $400. The $130.00 submitted towards the current $400 petition fee will be refunded via a treasury check.

The application will be returned to the Office of Initial Patent Examination for further processing with a **filing date of April 1, 2004**, using the 3 sheets of drawings supplied on December 13, 2004.

Telephone inquiries related to this decision may be directed to the undersigned at (571) 272-3215.

Charlema R. Grant
Petition Attorney
Office of Petitions

---

receipt in the office of all items listed thereon. See MPEP 503.

UNITED STATES PATENT AND TRADEMARK OFFICE

UNITED STATES DEPARTMENT OF COMMERCE
United States Patent and Trademark Office
Address: COMMISSIONER FOR PATENTS
P.O. Box 1450
Alexandria, Virginia 22313-1450
www.uspto.gov

APPLICATION NO.	FILING DATE	FIRST NAMED INVENTOR	ATTORNEY DOCKET NO.	CONFIRMATION NO.
10/815,580	03/31/2004	Larry Berger	293.100	2809

30040 7590 07/03/2008
MICHAEL A. SHIPPEY, PH. D.
LAW OFFICES OF KARLA SHIPPEY
4848 LAKEVIEW AVENUE, SUITE E
YORBA LINDA, CA 92886

EXAMINER
OLSEN, KAJ K

ART UNIT	PAPER NUMBER
1795	

MAIL DATE	DELIVERY MODE
07/03/2008	PAPER

Please find below and/or attached an Office communication concerning this application or proceeding.

The time period for reply, if any, is set in the attached communication.

PTO/SB/83 (01-06)
Approved for use through 12/31/2008. OMB 0651-0035
U.S. Patent and Trademark Office, U.S. DEPARTMENT OF COMMERCE
Under the Paperwork Reduction Act of 1995, no persons are required to respond to a collection of information unless it displays a valid OMB control number.

REQUEST FOR WITHDRAWAL AS ATTORNEY OR AGENT AND CHANGE OF CORRESPONDENCE ADDRESS

Application Number	10/815,580
Filing Date	03-31-2004
First Named Inventor	Berger, Larry
Art Unit	1753
Examiner Name	OLSEN, KAJ K
Attorney Docket Number	293.100

To: Commissioner for Patents
P.O. Box 1450
Alexandria, VA 22313-1450

Please withdraw me as attorney or agent for the above identified patent application, and

- [x] all the attorneys/agents of record.
- [ ] the attorneys/agents (with registration numbers) listed on the attached paper(s), or
- [ ] the attorneys/agents associated with Customer Number 030040

NOTE: This box can only be checked when the power of attorney of record in the application is to all the practitioners associated with a customer number.

The reasons for this request are: Request of the client

CORRESPONDENCE ADDRESS

1. [ ] The correspondence address is NOT affected by this withdrawal.
2. [ ] Change the correspondence address and direct all future correspondence to:

[ ] The address associated with Customer Number:

Approved 7-3-08 Jacqueline M. Stone
Jacqueline M. Stone, Director
Technology Center 1700

OR

[x] Firm or Individual Name	Electro-Chemical Devices, Inc attn: Robert Wek .				
Address	23665 Via Del Rio				
City	Yorba Linda,	State	CA	Zip	92687
Country	USA				
Telephone	1-714-692-1333	Email	bobw@edcl.com		

Signature	Michael A. Shippey		
Name	Michael A. Shippey	Registration No.	45,588
Date	03/20/2008	Telephone No.	714-693-9110

NOTE: Withdrawal is effective when approved rather than when received. Unless there are at least 30 days between approval of withdrawal and the expiration date of a time period for response or possible extension period, the request to withdraw is normally disapproved.

This collection of information is required by 37 CFR 1.36. The information is required to obtain or retain a benefit by the public which is to file (and by the USPTO to process) an application. Confidentiality is governed by 35 U.S.C. 122 and 37 CFR 1.11 and 1.14. This collection is estimated to take 12 minutes to complete, including gathering, preparing, and submitting the completed application form to the USPTO. Time will vary depending upon the individual case. Any comments on the amount of time you require to complete this form and/or suggestions for reducing this burden, should be sent to the Chief Information Officer, U.S. Patent and Trademark Office, U.S. Department of Commerce, P.O. Box 1450, Alexandria, VA 22313-1450. DO NOT SEND FEES OR COMPLETED FORMS TO THIS ADDRESS. SEND TO: **Commissioner for Patents, P.O. Box 1450, Alexandria, VA 22313-1450.**

If you need assistance in completing the form, call 1-800-PTO-9199 and select option 2.

UNITED STATES PATENT AND TRADEMARK OFFICE

Commissioner for Patents
United States Patent and Trademark Office
P.O. Box 1450
Alexandria, VA 22313-1450
www.uspto.gov

Cynthia S. Murphy
Renner, Otto, Boisselle & Sklar, LLP
Nineteenth Floor
1621 Euclid Avenue
Cleveland OH 44115-2191

COPY MAILED

NOV 02 2004

OFFICE OF PETITIONS

In re Application of
Owens
Application No.: 10/815,608
Filed: April 1, 2004
Attorney Docket No.: AVERP3538USA
For: NEWSPRINT DISPENSING DEVICE

DECISION REFUSING STATUS
UNDER 37 CFR 1.47(b)

This is a decision on the petition under 37 CFR 1.47(b), filed July 27, 2004 (certificate of mailing date July 22, 2004).

The petition is **DISMISSED**.

Any request for reconsideration of this decision must be submitted within TWO (2) MONTHS from the mail date of this decision. Extensions of time under 37 CFR 1.136(a) are permitted. Any response should be entitled "Request for Reconsideration of Petition Under 37 CFR 1.47(b)" and may include an oath or declaration executed by the inventor. **Failure to respond will result in abandonment of the application.**

The above-identified application was filed on April 1, 2004 without an executed oath or declaration. Accordingly, on June 17, 2004, a "Notice to File Missing Parts of Nonprovisional Application" (Notice) was mailed, requiring an executed oath or declaration and a surcharge for its late filing.

In response, on July 27, 2004 (certificate of mailing date July 22, 2004), petitioner filed, *inter alia,* a declaration executed by Christian A. Simcic on behalf of Avery Dennison Corporation (Avery), a statement of facts by John W. Cornell, who attests that the non-signing inventor, John R. Owens, was an employee of Avery when the technology was developed, a copy of the employment agreement signed by Owens that establishes Owens was obligated to assign Avery the technology developed during his employment with Avery, proof of irreparable harm if the application is not prosecuted, the surcharge, authorization to charge the petition fee, and the instant petition.[1] A declaration of facts of Attorney Cynthia S. Murphy accompanies the petition. Attorney Murphy explains that she sent an assignment and combined declaration and power of attorney to Mr. Owens at his last known address and no response was received from Mr. Owens.

A grantable petition under 37 CFR 1.47(b) requires:

(1) proof that the non-signing inventor cannot be reached or refuses to sign the oath or declaration;

(2) an acceptable oath or declaration;

[1] Pursuant to petitioner's authorization, deposit acocunt no. 18-0988 will be charged the $130.00 petition fee. The $130.00 submitted with the instant petition was applied to the late declaration surcharge required by the June 17, 2004 Notice.

(3) the petition fee;
(4) a statement of the last known address of the non-signing inventor;
(5) proof of proprietary interest; and
(6) proof of irreparable damage.

This petition lacks items (1) and (2).

As to item (1), applicant has failed to establish that Mr. Owens has refused to sign the declaration or cannot be reached. A successful Rule 47 petition requires either (a) a clear refusal to join, whether expressly or by conduct, or (b) a showing of diligence in trying to find an unavailable inventor. The proof of the pertinent events should be made by a statement of someone with first hand knowledge of the events.

The Office requires that the non-signing inventor be provided with a complete copy of the application as filed. A complete copy of the application, including specification, claims and drawings, and the declaration should be mailed to Mr. Owens' last known address with the request that Mr. Owens sign the declaration. MPEP 409.03(d) The statement of facts by Attorney Murphy does not establish that a complete copy of the application was mailed to Mr. Owens.

Mr. Owens must have the complete application in his possession in order to make an informed decision as to whether he joins in its filing. Mr. Owens cannot make the necessary statements found in the declaration-- i.e. "I have reviewed and understand..." -- without having examined the patent application.

Any written refusal should be included as documentary evidence in the reconsideration petition. If there is an oral refusal, the facts surrounding the refusal should be included in a declaration by a party with first hand knowledge of the refusal. If it is concluded by the 37 CFR 1.47 applicant that a non-signing inventor's conduct constitutes a refusal, all facts upon which that conclusion is based should be stated in an affidavit or declaration.

If petitioner alleges that Mr. Owens cannot be located, other attempts to reach Mr. Owen are required. If the papers are returned, and other efforts to locate the inventor, e.g. through e-mail or computer searches (such as LEXIS) continue to fail, then applicant will establish that the inventor cannot be reached.

Documentary evidence to support facts alleged in the affidavit or declaration should be submitted.

As to item(2), petitioner has not submitted a complete declaration. Petitioner has submitted an *added page* to a combined declaration and power of attorney, but <u>there is no combined declaration and power of attorney present in the application file</u>.

Petitioner is required to submit a declaration containing the required statements and information (37 CFR 1.63) and a newly executed added page to the declaration.

Further correspondence with respect to this matter should be addressed as follows:

By mail: Mail Stop PETITION
Commissioner for Patents
Post Office Box 1450
Alexandria, VA 22313-1450

By hand: U.S. Patent and Trademark Office
220 20th Street S.
Customer Window, Mail Stop Petition
Crystal Plaza 2, Lobby, Room 1B03
Arlington, VA 22202

By FAX: (703) 872-9306 – ATTN: Office of Petitions

Telephone inquiries should be directed to the undersigned at (571) 272-3230.

E. Shirene Willis
Petitions Attorney
Office of Petitions
Office of the Deputy Commissioner
for Patent Examination Policy

UNITED STATES PATENT AND TRADEMARK OFFICE

Commissioner for Patents
United States Patent and Trademark Office
P.O. Box 1450
Alexandria, VA 22313-1450
www.uspto.gov

Cynthia S. Murphy
Renner, Otto, Boisselle & Sklar, LLP
Nineteenth Floor
1621 Euclid Avenue
Cleveland OH 44115-2191

COPY MAILED

FEB 22 2005

OFFICE OF PETITIONS

In re Application of
Owens
Application No.: 10/815,608
Filed: April 1, 2004
Attorney Docket No.: AVERP3538USA
For: NEWSPRINT DISPENSING DEVICE

DECISION ACCORDING STATUS
UNDER 37 CFR 1.47(b)

This is a decision on the petition under 37 CFR 1.47(b), filed January 6, 2005 (certificate of mailing date January 3, 2005).

The petition is granted.

Petitioner has shown that the non-signing inventor, John R. Owens, has constructively refused to join in the filing of this application. Specifically, the statement of facts of Attorney Cynthia S. Murphy establishes that the inventor was mailed a full copy of the application as filed, including specification, claims and drawings, an Assignment, and a Combined Declaration and Power of Attorney on June 7, 2004. The inventor did not respond to the request that he return an executed declaration. A statement of facts by John W. Cornell establishes that the non-signing inventor was an employee of Avery when the technology was developed and a copy of the employment agreement signed by Owens establishes Owens was obligated to assign Avery the technology developed during his employment with Avery. Lastly, petitioner has submitted a declaration in compliance with 37 CFR 1.63 and 1.64 and petitioner has shown that such action is necessary to prevent irreparable damage.

This application and papers have been reviewed and found in compliance with 37 CFR 1.47(b). This application is hereby accorded Rule 1.47(b) status.

As provided in Rule 1.47(c), this Office will forward notice of this application's filing to the non-signing inventor at the address given in the petition. Notice of the filing of this application will also be published in the Official Gazette.

After this decision is mailed, the above-identified application will be forwarded to the Office of Initial Patent Examination for further processing.

Telephone inquiries should be directed to the undersigned at (571) 272-3230.

E. Shirene Willis
Senior Petitions Attorney
Office of Petitions

UNITED STATES PATENT AND TRADEMARK OFFICE

Commissioner for Patents
United States Patent and Trademark Office
P.O. Box 1450
Alexandria, VA 22313-1450
www.uspto.gov

COPY MAILED

NOV 0 5 2009

OFFICE OF PETITIONS

SILVERBROOK RESEARCH PTY LTD
393 DARLING STREET
BALMAIN 2041 AU AUSTRALIA

In re Application of	:	
Lapstun et al.	:	
Application No. 10/815,630	:	ON PETITION
Filed: April 2, 2004	:	
Attorney Docket No. HYC003US	:	

This is a decision on the petition under the unintentional provisions of 37 CFR 1.137(b), filed November 3, 2008, to revive the above-identified application.

The petition is **GRANTED**.

The application became abandoned for failure to reply in a timely manner to the non-final Office action mailed, April 3, 2008, which set a shortened statutory period for reply of three (3) months. No extensions of time under the provisions of 37 CFR 1.136(a) were obtained. Accordingly, the application became abandoned on July 4, 2008.

The petition satisfies the requirements of 37 CFR 1.137(b) in that petitioner has supplied (1) the reply in the form of an amendment , (2) the petition fee of $1,620, and (3) a proper statement of unintentional delay.

Telephone inquiries concerning this decision should be directed to Alicia Kelley at (571) 272-6059.

This application is being referred to Technology Center 3696 for further examination on the merits.

Chris Bottorff
Petitions Examiner
Office of Petitions

UNITED STATES PATENT AND TRADEMARK OFFICE

Commissioner for Patents
United States Patent and Trademark Office
P.O. Box 1450
Alexandria, VA 22313-1450
www.uspto.gov

SILVERBROOK RESEARCH PTY LTD
393 DARLING STREET
BALMAIN NSW 2041, AUSTRALIA

COPY MAILED

NOV 0 5 2004

OFFICE OF PETITIONS

In re Application of	:
Silverbrook et al.	:
Application No. 10/815,636	: DECISION ON PETITION
Filed: April 2, 2004	: UNDER 37 CFR 1.78(a)(3)
Attorney Docket No. HYJ001US	:

This is a decision on the petition under 37 CFR 1.78(a)(3), filed October 13, 2004, to accept an unintentionally delayed claim under 35 U.S.C. §120 for the benefit of prior-filed nonprovisional Application No. 10/778,056, filed on February 17, 2004.

The petition is **DISMISSED**.

A petition for acceptance of a claim for late priority under 37 CFR 1.78(a)(3) is only applicable to those applications filed on or after November 29, 2000. Further, the petition is appropriate only after the expiration of the period specified in 37 CFR 1.78(a)(2)(ii). In addition, the petition under 37 CFR 1.78(a)(3) must be accompanied by:

(1) the reference required by 35 U.S.C. § 120 and 37 CFR 1.78(a)(2)(i) of the prior-filed application, unless previously submitted;
(2) the surcharge set forth in § 1.17(t); and
(3) a statement that the entire delay between the date the claim was due under 37 CFR 1.78(a)(2)(ii) and the date the claim was filed was unintentional. The Commissioner may require additional information where there is a question whether the delay was unintentional.

The instant petition does not comply with item (1).

37 CFR 1.78(a)(2)(iii) states the reference required by this paragraph must be included in an application data sheet (ADS) (§ 1.76), or the specification must contain or be amended to contain such reference in the first sentence following the title. Petitioner failed to include either an amendment to the specification or ADS reflecting the change in the claim for late priority.

Accordingly, before the petition under 37 CFR § 1.78(a)(3) can be granted, a renewed petition under 37 CFR § 1.78(a)(3) and an amendment[1] or an ADS stating the relationship of the prior-filed application to the instant application is required.

---

[1] *Note* 37 CFR 1.121

Further correspondence with respect to this matter should be addressed as follows:

By mail: Mail Stop PETITIONS
Commissioner for Patents
Post Office Box 1450
Alexandria, VA 22313-1450

By hand: Customer Window located at:

U.S. Patent and Trademark Office
220 20th Street S
Customer Window, Mail Stop Petitions
Crystal Plaza Two Lobby, Room 1B03
Arlington, VA 22202

By fax: (703) 872-9306
ATTN: Office of Petitions

Any questions concerning this matter may be directed Paralegal Liana Chase at (571) 272-3282.

Frances Hicks

Frances Hicks
Petitions Examiner
Office of Petitions
Office of the Deputy Commissioner
for Patent Examination Policy

UNITED STATES PATENT AND TRADEMARK OFFICE

Commissioner for Patents
United States Patent and Trademark Office
P.O. Box 1450
Alexandria, VA 22313-1450
www.uspto.gov

SILVERBROOK RESEARCH PTY LTD
393 DARLING STREET
BALMAIN NSW 2041, AUSTRALIA

COPY MAILED

DEC 28 2004

OFFICE OF PETITIONS

In re Application of	:
Silverbrook et al.	:
Application No. 10/815,636	: DECISION ON PETITION
Filed: April 2, 2004	: UNDER 37 CFR 1.78(a)(3)
Attorney Docket No. HYJ001US	:

This is a decision on the renewed petition under 37 CFR 1.78(a)(3), filed December 1, 2004, to accept an unintentionally delayed claim under 35 U.S.C. § 120 for the benefit of priority to prior-filed nonprovisional Application No. 10/778,056, filed on February 17, 2004, as set forth in the amendment filed concurrently with the instant petition.

The petition is **DISMISSED**.

A petition for acceptance of a claim for late priority under 37 CFR 1.78(a)(3) is only applicable to those applications filed on or after November 29, 2000. Further, the petition is appropriate only after the expiration of the period specified in 37 CFR 1.78(a)(2)(ii). In addition, the petition under 37 CFR 1.78(a)(3) must be accompanied by:

(1) the reference required by 35 U.S.C. § 120 and 37 CFR 1.78(a)(2)(i) of the prior-filed application(s), unless previously submitted;
(2) the surcharge set forth in § 1.17(t); and
(3) a statement that the entire delay between the date the claim was due under 37 CFR 1.78(a)(2)(ii) and the date the claim was filed was unintentional. The Commissioner may require additional information where there is a question whether the delay was unintentional.

The instant petition does not comply with item (1) above.

A reference to add the above-noted, prior-filed applications on page one following the first sentence of the specification has been included in a concurrently filed amendment. However, the amendment is not acceptable as drafted since it improperly incorporates by reference the prior-filed applications. Petitioner's attention is directed to Dart Industries v. Banner, 636 F.2d 684, 207 USPQ 273 (C.A.D.C. 1980), where the court drew a distinction between a permissible 35 U.S.C. § 120 statement and the impermissible introduction of new matter by way of incorporation by reference in a 35 U.S.C. § 120 statement. The court specifically stated:

> Section 120 merely provides a mechanism whereby an application becomes entitled to benefit of the filing date of an earlier application disclosing the same subject matter. Common subject matter must be disclosed, in both applications, either

> specifically or by an express incorporation-by-reference of prior disclosed subject matter. Nothing in section 120 itself operates to carry forward any disclosure from an earlier application. In re deSeversky, supra at 674, 177 USPQ at 146-147. Section 120 contains no magical disclosure-augmenting powers able to pierce new matter barriers. It cannot, therefore, "limit" the absolute and express prohibition against new matter contained in section 251.

In order for the incorporation by reference statement to be effective as a proper safeguard against the omission of a portion of a prior application, the incorporation by reference statement must be included in the specification-as-filed, or in an amendment specifically referred to in an oath or declaration executing the application. *See* In re deSeversky, *supra*. *Note also* MPEP 201.06(c).

Accordingly, before the petition under 37 CFR 1.78(a)(3) can be granted, a substitute amendment[1] deleting the incorporation by reference statement, along with a renewed petition under 37 CFR 1.78(a)(3), is required.

Further correspondence with respect to this matter should be addressed as follows:

By mail: Mail Stop PETITIONS
Commissioner for Patents
Post Office Box 1450
Alexandria, VA 22313-1450

By hand: Customer Window located at:

U.S. Patent and Trademark Office
220 20th Street S
Customer Window, Mail Stop Petitions
Crystal Plaza Two Lobby, Room 1B03
Arlington, VA 22202

By fax: (703) 872-9306
ATTN: Office of Petitions

Any questions concerning this matter may be directed to Paralegal Liana Chase at (571) 272-3206.

Frances Hicks

Frances Hicks
Petitions Examiner
Office of Petitions
Office of the Deputy Commissioner
for Patent Examination Policy

---

[1] *Note* 37 CFR 1.121

UNITED STATES PATENT AND TRADEMARK OFFICE

Commissioner for Patents
United States Patent and Trademark Office
P.O. Box 1450
Alexandria, VA 22313-1450
www.uspto.gov

SILVERBROOK RESEARCH PTY LTD
393 DARLING STREET
BALMAIN 2041
AUSTRALIA

COPY MAILED

MAY 1 1 2005

OFFICE OF PETITIONS

In re Application of	:	
Silverbrook et al.	:	
Application No. 10/815,636	:	ON PETITION
Filed: April 2, 2004	:	
Attorney Docket No. HYJ001US	:	

This is a decision on the renewed petition under 37 CFR § 1.78(a)(3), filed February 24, 2005, to accept an unintentionally delayed claim under 35 U.S.C. § 120 for the benefit of the prior-filed nonprovisional application set forth in the concurrently filed amendment.

The petition is **DISMISSED**.

A petition for acceptance of a claim for late priority under 37 CFR 1.78(a)(3) is only applicable to those applications filed on or after November 29, 2000. Further, the petition is appropriate only after the expiration of the period specified in 37 CFR 1.78(a)(2)(ii). In addition, the petition under 37 CFR 1.78(a)(3) must be accompanied by:

(1) the reference required by 35 U.S.C. § 120 and 37 CFR 1.78(a)(2)(i) of the prior-filed application(s), unless previously submitted;
(2) the surcharge set forth in § 1.17(t); and
(3) a statement that the entire delay between the date the claim was due under 37 CFR 1.78(a)(2)(ii) and the date the claim was filed was unintentional. The Commissioner may require additional information where there is a question whether the delay was unintentional.

The instant petition does not comply with item (1) above.

The amendment submitted with the instant petition does not comply with 37 CFR 1.121(b)(1)(ii), which states in part, that an amendment must be made by submitting,

> The full text of any replacement paragraph with markings to show all the changes relative to the previous version of the paragraph. The text of any added subject matter must be shown by underlining the added text. The text of any deleted matter must be shown by strike-through except that double brackets placed before and after the deleted characters may be used to show deletion of five or fewer consecutive characters. The text of any deleted subject matter must be shown by being placed within double brackets if strikethrough cannot be easily perceived.

It is not apparent whether petitioner wishes to delete the entire claim for priority or merely the incorporation by reference statement. Petitioner should clearly identify what is being claimed, if anything, and what is being deleted in accordance with 37 CFR 1.121.

Further, the renewed petition and any amendments submitted must be signed by all of the inventors.

Accordingly, before the petition under 37 CFR 1.78(a)(3) can be granted, a substitute amendment[1], along with a renewed petition under 37 CFR 1.78(a)(3), and signed by all of the inventors, is required.

Further correspondence with respect to this matter should be addressed as follows:

By mail: Mail Stop PETITIONS
Commissioner for Patents
Post Office Box 1450
Alexandria, VA 22313-1450

By hand: Customer Window located at:

U.S. Patent and Trademark Office
Customer Service Window Randolph Building
401 Dulany Street
Alexandria, VA 22314

By fax: (703) 872-9306
ATTN: Office of Petitions

Any questions concerning this matter may be directed to Paralegal Liana Chase at (571) 272-3206.

Frances Hicks

Frances Hicks
Petitions Examiner
Office of Petitions
Office of the Deputy Commissioner
for Patent Examination Policy

[1] *Note* 37 CFR 1.121

UNITED STATES PATENT AND TRADEMARK OFFICE

Commissioner for Patents
United States Patent and Trademark Office
P.O. Box 1450
Alexandria, VA 22313-1450
www.uspto.gov

SILVERBROOK RESEARCH PTY LTD
393 DARLING STREET
BALMAIN NSW 2-041 AU AUSTRALIA

COPY MAILED
SEP 26 2006
OFFICE OF PETITIONS

In re Application of	:	
Silverbrook et al.	:	
Application No. 10/815,636	:	DECISION GRANTING PETITION
Filed: April 2, 2004	:	UNDER 37 CFR 1.78(a)(3)
Attorney Docket No. HYJ001US	:	

This is a decision on the renewed petition under 37 CFR 1.78(a)(3), filed May 27, 2005, to accept an unintentionally delayed claim under 35 U.S.C. § 120 for the benefit of priority to the prior-filed nonprovisional application set forth in the amendment filed concurrently with the instant petition.

The petition is **GRANTED**.

A petition for acceptance of a claim for late priority under 37 CFR 1.78(a)(3) is only applicable to those applications filed on or after November 29, 2000. Further, the petition is appropriate only after the expiration of the period specified in 37 CFR 1.78(a)(2)(ii). In addition, the petition under 37 CFR 1.78(a)(3) must be accompanied by:

(1) the reference required by 35 U.S.C. § 120 and 37 CFR 1.78(a)(2)(i) of the prior-filed application, unless previously submitted;
(2) the surcharge set forth in § 1.17(t); and
(3) a statement that the entire delay between the date the claim was due under 37 CFR 1.78(a)(2)(ii) and the date the claim was filed was unintentional. The Commissioner may require additional information where there is a question whether the delay was unintentional.

The instant nonprovisional application was filed after November 29, 2000, and the claim herein for the benefit of priority to the prior-filed provisional application is submitted after expiration of the period specified by 37 CFR 1.78(a)(2)(ii). Therefore, this is a proper petition under 37 CFR 1.78(a)(3).

The petition complies with the requirements for a grantable petition under 37 CFR 1.78(a)(3) in that (1) a reference to the prior-filed nonprovisional application has been included in an amendment to the first sentence of the specification following the title, as provided by 37 CFR 1.78(a)(2)(iii); (2) the surcharge fee required by 37 CFR 1.17(t) has been submitted; and (3) the petition contains a proper statement of unintentional delay. Accordingly, having found that the instant petition for acceptance of an unintentionally delayed claim for the benefit of priority

under 35 U.S.C. § 120 to the prior-filed nonprovisional application satisfies the conditions of 37 CFR 1.78(a)(3), the petition is granted.

The granting of the petition to accept the delayed benefit claim to the prior-filed application under 37 CFR 1.78(a)(3) should not be construed as meaning that the instant application is entitled to the benefit of the prior-filed application. In order for the instant application to be entitled to the benefit of the prior-filed application, all other requirements under 35 U.S.C. § 120 and 37 CFR 1.78(a)(1) and (a)(2) must be met. Similarly, the fact that the corrected Filing Receipt accompanying this decision on petition includes the prior-filed application should not be construed as meaning that applicant is entitled to the claim for benefit of priority to the prior-filed application noted thereon. Accordingly, the examiner will, in due course, consider this benefit claim and determine whether the instant application is entitled to the benefit of the earlier filing date.

A corrected Filing Receipt, which includes the priority claim to the prior-filed nonprovisional application, accompanies this decision on petition.

Any inquiries concerning this decision may be directed to the undersigned at (571) 272-3282.

This matter is being referred to Technology Center Art Unit 2625 for appropriate action on the amendment filed May 27, 2005, including consideration by the examiner of applicant's entitlement to claim benefit of priority under 35 U.S.C. § 120 to the prior-filed nonprovisional application.

Liana Chase
Petitions Examiner
Office of Petitions

ATTACHMENT: Corrected Filing Receipt

UNITED STATES PATENT AND TRADEMARK OFFICE

UNITED STATES DEPARTMENT OF COMMERCE
United States Patent and Trademark Office
Address: COMMISSIONER FOR PATENTS
P.O. Box 1450
Alexandria, Virginia 22313-1450
www.uspto.gov

APPL NO.	FILING OR 371 (c) DATE	ART UNIT	FIL FEE REC'D	ATTY.DOCKET NO	DRAWINGS	TOT CLMS	IND CLMS
10/815,636	04/02/2004	2625	4588	HYJ001US	157	130	2

CONFIRMATION NO. 9669
CORRECTED FILING RECEIPT
OC000000020569977
OC000000020569977

24011
SILVERBROOK RESEARCH PTY LTD
393 DARLING STREET
BALMAIN, NSW 2041
AUSTRALIA

Date Mailed: 09/25/2006

Receipt is acknowledged of this regular Patent Application. It will be considered in its order and you will be notified as to the results of the examination. Be sure to provide the U.S. APPLICATION NUMBER, FILING DATE, NAME OF APPLICANT, and TITLE OF INVENTION when inquiring about this application. Fees transmitted by check or draft are subject to collection. Please verify the accuracy of the data presented on this receipt. **If an error is noted on this Filing Receipt, please mail to the Commissioner for Patents P.O. Box 1450 Alexandria Va 22313-1450. Please provide a copy of this Filing Receipt with the changes noted thereon. If you received a "Notice to File Missing Parts" for this application, please submit any corrections to this Filing Receipt with your reply to the Notice. When the USPTO processes the reply to the Notice, the USPTO will generate another Filing Receipt incorporating the requested corrections (if appropriate).**

Applicant(s)

Kia Silverbrook, Balmain, AUSTRALIA;
Paul Lapstun, Balmain, AUSTRALIA;
Peter Charles Boyd Henderson, Blamain, AUSTRALIA;
Alireza Moini, Balmain, AUSTRALIA;
Zhenya Alexander Yourlo, Balmain, AUSTRALIA;
Matthew John Underwood, Balmain, AUSTRALIA;
Nicholas Damon Ridley, Balmain, AUSTRALIA;
Jan Rusman, Balmain, AUSTRALIA;

Assignment For Published Patent Application

Silverbrook Research Pty Ltd

Power of Attorney: None

Domestic Priority data as claimed by applicant

This application is a CIP of 10/778,056 02/17/2004

Foreign Applications

AUSTRALIA 2002952259 10/25/2002
AUSTRALIA 2003900746 02/17/2003
AUSTRALIA PQ2912 09/17/1999
AUSTRALIA PQ3632 10/25/1999
AUSTRALIA 2003900983 03/04/2003
AUSTRALIA 2003901617 04/07/2003
AUSTRALIA 2003901795 04/15/2003

If Required, Foreign Filing License Granted: 06/17/2004

The country code and number of your priority application, to be used for filing abroad under the Paris Convention, is US10/815,636

Projected Publication Date: Not Applicable

Non-Publication Request: No

Early Publication Request: No

Title

Sensing device for coded data

Preliminary Class

358

PROTECTING YOUR INVENTION OUTSIDE THE UNITED STATES

Since the rights granted by a U.S. patent extend only throughout the territory of the United States and have no effect in a foreign country, an inventor who wishes patent protection in another country must apply for a patent in a specific country or in regional patent offices. Applicants may wish to consider the filing of an international application under the Patent Cooperation Treaty (PCT). An international (PCT) application generally has the same effect as a regular national patent application in each PCT-member country. The PCT process **simplifies** the filing of patent applications on the same invention in member countries, but **does not result** in a grant of "an international patent" and does not eliminate the need of applicants to file additional documents and fees in countries where patent protection is desired.

Almost every country has its own patent law, and a person desiring a patent in a particular country must make an application for patent in that country in accordance with its particular laws. Since the laws of many countries differ in various respects from the patent law of the United States, applicants are advised to seek guidance from specific foreign countries to ensure that patent rights are not lost prematurely.

Applicants also are advised that in the case of inventions made in the United States, the Director of the USPTO must issue a license before applicants can apply for a patent in a foreign country. The filing of a U.S. patent application serves as a request for a foreign filing license. The application's filing receipt contains further information and guidance as to the status of applicant's license for foreign filing.

Applicants may wish to consult the USPTO booklet, "General Information Concerning Patents" (specifically, the section entitled "Treaties and Foreign Patents") for more information on timeframes and deadlines for filing foreign patent applications. The guide is available either by contacting the USPTO Contact Center at 800-786-9199, or it can be viewed on the USPTO website at http://www.uspto.gov/web/offices/pac/doc/general/index.html.

For information on preventing theft of your intellectual property (patents, trademarks and copyrights), you may wish to consult the U.S. Government website, http://www.stopfakes.gov. Part of a Department of Commerce initiative, this website includes self-help "toolkits" giving innovators guidance on how to protect intellectual property in specific countries such as China, Korea and Mexico. For questions regarding patent enforcement issues, applicants may call the U.S. Government hotline at 1-866-999-HALT (1-866-999-4158).

LICENSE FOR FOREIGN FILING UNDER
Title 35, United States Code, Section 184

Title 37, Code of Federal Regulations, 5.11 & 5.15

GRANTED

The applicant has been granted a license under 35 U.S.C. 184, if the phrase "IF REQUIRED, FOREIGN FILING LICENSE GRANTED" followed by a date appears on this form. Such licenses are issued in all applications where the conditions for issuance of a license have been met, regardless of whether or not a license may be required as set forth in 37 CFR 5.15. The scope and limitations of this license are set forth in 37 CFR 5.15(a) unless an earlier license has been issued under 37 CFR 5.15(b). The license is subject to revocation upon written notification. The date indicated is the effective date of the license, unless an earlier license of similar scope has been granted under 37 CFR 5.13 or 5.14.

This license is to be retained by the licensee and may be used at any time on or after the effective date thereof unless it is revoked. This license is automatically transferred to any related applications(s) filed under 37 CFR 1.53(d). This license is not retroactive.

The grant of a license does not in any way lessen the responsibility of a licensee for the security of the subject matter as imposed by any Government contract or the provisions of existing laws relating to espionage and the national security or the export of technical data. Licensees should apprise themselves of current regulations especially with respect to certain countries, of other agencies, particularly the Office of Defense Trade Controls, Department of State (with respect to Arms, Munitions and Implements of War (22 CFR 121-128)); the Bureau of Industry and Security, Department of Commerce (15 CFR parts 730-774); the Office of Foreign Assets Control, Department of Treasury (31 CFR Parts 500+) and the Department of Energy.

NOT GRANTED

No license under 35 U.S.C. 184 has been granted at this time, if the phrase "IF REQUIRED, FOREIGN FILING LICENSE GRANTED" DOES NOT appear on this form. Applicant may still petition for a license under 37 CFR 5.12, if a license is desired before the expiration of 6 months from the filing date of the application. If 6 months has lapsed from the filing date of this application and the licensee has not received any indication of a secrecy order under 35 U.S.C. 181, the licensee may foreign file the application pursuant to 37 CFR 5.15(b).

UNITED STATES PATENT AND TRADEMARK OFFICE

COMMISSIONER FOR PATENTS
UNITED STATES PATENT AND TRADEMARK OFFICE
P.O. BOX 1450
ALEXANDRIA, VA 22313-1450
www.uspto.gov

SILVERBROOK RESEARCH PTY LTD
393 DARLING STREET
BALMAIN NSW 2041, AUSTRALIA

COPY MAILED

APR 29 2005

OFFICE OF PETITIONS

In re Application of :
Kia Silverbrook et al :
Application No. 10/815,649 : DECISION ON PETITION
Filed: April 2, 2004 : UNDER 37 CFR 1.78(a)(3)
Attorney Docket No. HYJ002US

This is a decision on the petition, filed October 13, 2004 which is being treated as a petition, under 37 CFR 1.78(a)(3) to accept an unintentionally delayed claim under 35 U.S.C. § 120 for the benefit of priority to prior-filed nonprovisional Application No. 10/778,056, filed February 17, 2004.

The petition is **DISMISSED**.

A petition for acceptance of a claim for late priority under 37 CFR 1.78(a)(3) is only applicable to those applications filed on or after November 29, 2000. Further, the petition is appropriate only after the expiration of the period specified in 37 CFR 1.78(a)(2)(ii). In addition, the petition under 37 CFR 1.78(a)(3) must be accompanied by:

(1) the reference required by 35 U.S.C. § 120 and 37 CFR 1.78(a)(2)(i) of the prior-filed application, unless previously submitted;
(2) the surcharge set forth in § 1.17(t); and
(3) a statement that the entire delay between the date the claim was due under 37 CFR 1.78(a)(2)(ii) and the date the claim was filed was unintentional. The Commissioner may require additional information where there is a question whether the delay was unintentional.

The amendment submitted concurrently with the instant petition as drafted is unacceptable and, therefore, is not considered a proper reference under 37 CFR 1.78(a)(5)(i) and (a)(5)(iii). In this regard, the amendment is physically part of the instant petition and, as such, does not comply with 37 CFR 1.121, 1.52, or 1.4(c). Note that 37 CFR 1.121 states that amendments are made by filing a paper, in compliance with § 1.52, directing that specified amendments be made. The pertinent section of 37 CFR 1.52 states that the claim (in this case, the claim for priority), must commence on a separate physical sheet. 37 CFR 1.4(c) states that each distinct subject must be contained in a separate paper since different matters may be considered by different branches of the United States Patent and Trademark Office.

In view of the above, the amendment to add a priority claim to the first line of the specification, which is physically embedded in the instant petition, is not acceptable. Accordingly, a substitute amendment in compliance with the aforementioned rules, along with a renewed petition under 37 CFR 1.78(a)(3), must be submitted.

Further correspondence with respect to this matter should be addressed as follows:

By mail:	Mail Stop PETITIONS Commissioner for Patents Post Office Box 1450 Alexandria, VA 22313-1450
By hand:	Customer Service Window Randolph Building 401 Dulany Street Alexandria, VA 22314
By fax:	(703) 872-9306 ATTN: Office of Petitions

Telephone inquiries concerning this decision should be directed to Irvin Dingle at (571) 272-3210.

Frances Hicks

Frances Hicks
Lead Petitions Examiner
Office of Petitions
Office of the Deputy Commissioner
for Patent Examination Policy

UNITED STATES PATENT AND TRADEMARK OFFICE

Commissioner for Patents
United States Patent and Trademark Office
P.O. Box 1450
Alexandria, VA 22313-1450
www.uspto.gov

SILVERBROOK RESEARCH PTY LTD
393 DARLING STREET
BALMAIN 2041 AU AUSTRALIA

COPY MAILED

AUG 1 0 2005

OFFICE OF PETITIONS

In re Application of :
Kia Silverbrook et al :
Application No. 10/815,649 : DECISION ON PETITION
Filed: April 2, 2004 : UNDER 37 CFR 1.78(a)(3)
Attorney Docket No. HYJ002US

This is a decision on the renewed petition under 37 CFR 1.78(a)(3), filed May 27, 2005, to accept an unintentionally delayed claim under 35 U.S.C. § 120 for the benefit of priority to prior-filed nonprovisional Application No. 10/778,056, as set forth in the concurrently filed application data sheet.

The petition is **GRANTED**.

A petition for acceptance of a claim for late priority under 37 CFR 1.78(a)(3) is only applicable to those applications filed on or after November 29, 2000. Further, the petition is appropriate only after the expiration of the period specified in 37 CFR 1.78(a)(2)(ii). In addition, the petition under 37 CFR 1.78(a)(3) must be accompanied by:

> **(1)** the reference required by 35 U.S.C. § 120 and 37 CFR 1.78(a)(2)(i) of the prior-filed application, unless previously submitted;
> **(2)** the surcharge set forth in § 1.17(t); and
> **(3)** a statement that the entire delay between the date the claim was due under 37 CFR 1.78(a)(2)(ii) and the date the claim was filed was unintentional. The Commissioner may require additional information where there is a question whether the delay was unintentional.

The instant pending application was filed on April 2, 2004, and was pending at the time of filing of the instant petition. A reference to the above-noted prior-filed nonprovisional application has been included in an ADS to the first sentence of the specification following the title as required by 37 CFR 1.78(a)(2)(iii).

The instant nonprovisional application was filed after November 29, 2000, and the claim herein for the benefit of priority to the prior-filed nonprovisional application is submitted after expiration of the period specified in 37 CFR 1.78(a)(2)(ii). Also, the reference to the prior-filed nonprovisional application was submitted during the pendency of the instant nonprovisional

application, for which the claim for benefit of priority is sought. *See* 35 U.S.C. § 120. Accordingly, having found that the instant petition for acceptance of an unintentionally delayed claim for the benefit of priority under 35 U.S.C. § 120 to the prior-filed nonprovisional application satisfies the conditions of 37 CFR 1.78(a)(3), the petition is granted.

The granting of the petition to accept the delayed benefit claim to the prior-filed application under 37 CFR 1.78(a)(3) should not be construed as meaning that the instant application is entitled to the benefit of the prior-filed application. In order for the instant application to be entitled to the benefit of the prior-filed application, all other requirements under 35 U.S.C. § 120 and 37 CFR 1.78(a)(1) and (a)(2) must be met. Similarly, the fact that the corrected Filing Receipt accompanying this decision on petition includes the prior-filed application should not be construed as meaning that applicant is entitled to the claim for benefit of priority to the prior-filed application noted thereon. Accordingly, the examiner will, in due course, consider this benefit claim and determine whether the instant application is entitled to the benefit of the earlier filing date.

Any inquiries concerning this decision may be directed to Irvin Dingle at (571) 272-3210.

This matter is being referred to Technology Center Art Unit 2876.

Frances Hicks
Petitions Examiner
Office of Petitions
Office of the Deputy Commissioner
for Patent Examination Policy

Attachment: Corrected Filing Receipt

UNITED STATES PATENT AND TRADEMARK OFFICE

COMMISSIONER FOR PATENTS
UNITED STATES PATENT AND TRADEMARK OFFICE
P.O. BOX 1450
ALEXANDRIA, VA 22313-1450
www.uspto.gov

BROWDY AND NEIMARK, P.L.L.C.
624 NINTH STREET, NW
SUITE 300
WASHINGTON DC 20001-5303

COPY MAILED

JAN 31 2005

OFFICE OF PETITIONS

Applicant: Ognibene
Appl. No.: 10/815,655
Filing Date: April 2, 2004
Title: SINGLE-ACTING CYLINDER-PISTON UNIT OF PLUNGER TYPE
Attorney Docket No.: OGNIBENE =1
Pub. No.: US 2004/0194620 A1
Pub. Date: October 7, 2004

This is in response to the request for correction of patent application publication under 37 CFR 1.221(b), which was filed on December 7, 2004.

The request is DISMISSED.

The instant request is that the application be republished because the patent application publication contains a typographical error on the front page of the publication as the assignee name "OGNIBENE" is misspelled as "OGINBENE".

37 CFR 1.221(b) is applicable "only when the Office makes a material mistake which is apparent from Office records . . . Any request for a corrected publication or revised patent application publication other than provided as provided in paragraph (a) of this section must be filed within two months from the date of the patent application publication." A material mistake must affect the public's ability to appreciate the technical disclosure of the patent application publication, to determine the scope of the patent application publication, or to determine the scope of the provisional rights that an applicant may seek to enforce upon issuance of a patent.[1] The instant request does not identify a material mistake in the publication made by the Office:

The typographical error on the front page of the patent application publication, wherein the assignee name "OGNIBENE" is misspelled as "OGINBENE" is an Office mistake, but it is not a material error under 37 CFR 1.221(b). The mistake is a minor typographical error. The mistake does not affect the public's ability to appreciate the technical disclosure of the patent application publication, or determine the scope of the patent application publication or determine the scope of the provisional rights that an applicant may seek to enforce upon issuance of a patent.

---

[1] Changes to Implement Eighteen-Month Publication of Patent Applications, 65 FR 57023, 57038 (Sept. 20, 2000), 1239 Off. Gaz. Pat. Office Notices 63, 75 (Oct. 10, 2000) (final rule).

On June 18, 2004, a Filing Receipt was mailed, which listed the assignee name as "OGINBENE." To avoid this type of problem in the future, applicant's representative should review the filing receipt and make a request for a corrected filing receipt using the facsimile number (703-746-9195) on the Filing Receipt.

Applicant's request for a corrected patent application publication on December 7, 2004, may constitute a "failure to engage in reasonable efforts to conclude processing or examination of the application." See 1.704(c). This determination will be made on or after a mailing of a Notice of Allowance.

The applicant is advised that a "request for republication of an application previously published" may be filed under 37 CFR 1.221(a). Such a request for republication "must include a copy of the application in compliance with the Office's electronic filing system requirements and be accompanied by the publication fee set forth in § 1.18(d) and the processing fee set forth in § 1.17(i)." If the request for republication does not comply with the electronic filing system requirements, the republication will not take place and the publication fee set forth in § 1.18(d) will be refunded. The processing fee will be retained.

Any request for republication under 37 CFR 1.221(a), must be submitted via the EFS system and questions or request for reconsideration of this decision, should be addressed as follows:

By mail to: Mail Stop PGPUB
Commissioner for Patents
P.O. Box 1450
Alexandria, VA 22313-1450

Inquiries relating to this matter may be directed to Mark Polutta at (571) 272-7709 (voice).

Mark O. Polutta
Office of Patent Legal Administration
Office of the Deputy Commissioner
for Patent Examination Policy

UNITED STATES PATENT AND TRADEMARK OFFICE

Commissioner for Patents
United States Patent and Trademark Office
P.O. Box 1450
Alexandria, VA 22313-1450
www.uspto.gov

COPY MAILED

MAY 3 1 2005

OFFICE OF PETITIONS

DICKSTEIN SHAPIRO MORIN & OSHIUNSKY
2101 L. STREET, N.W.
WASHINGTON DC 20037

In re Application of	:	
Shinichi Kojima et al	:	
Application No. 10/815,662	:	ON PETITION
Filed: April 2, 2004	:	
Attorney Docket No. A8319.0038/P038-A	:	

This is a decision on the petition, filed May 26, 2005, under 37 CFR 1.313(c)(2) to withdraw the above-identified application from issue after payment of the issue fee.

The petition is **GRANTED**.

The above-identified application is withdrawn from issue for consideration of a submission under 37 CFR 1.114 (request for continued examination). See 37 CFR 1.313(c)(2).

Petitioner is advised that the issue fee paid on February 7, 2005 in the above-identified application cannot be refunded. If, however, the above-identified application is again allowed, petitioner may request that it be applied towards the issue fee required by the new Notice of Allowance.[1]

Telephone inquiries should be directed to the undersigned at (571) 272-3208.

The examiner of Technology Center AU 2882 will consider the request for continued examination under 37 CFR 1.114.

Karen Creasy

Karen Creasy
Petitions Examiner
Office of Petitions
Office of the Deputy Commissioner
for Patent Examination Policy

---

[1] The request to apply the issue fee to the new Notice may be satisfied by completing and returning the new Issue Fee Transmittal Form PTOL-85(b), which includes the following language thereon: "Commissioner for Patents is requested to apply the Issue Fee and Publication Fee (if any) or re-apply any previously paid issue fee to the application identified above." Petitioner is advised that, whether a fee is indicated as being due or not, the Issue Fee Transmittal Form **must** be completed and timely submitted to avoid abandonment. Note the language in bold text on the first page of the Notice of Allowance and Fee(s) Due (PTOL-85).

UNITED STATES PATENT AND TRADEMARK OFFICE

Commissioner for Patents
United States Patent and Trademark Office
P.O. Box 1450
Alexandria, VA 22313-1450
www.uspto.gov

BUCHANAN INGERSOLL PC
(INCLUDING BURNS, DOANE, SWECKER & MATHIS)
POST OFFICE BOX 1404
ALEXANDRIA, VA 22313-1404

COPY MAILED

DEC 1 6 2005

OFFICE OF PETITIONS

In re Application of :
Hoi-Sing Kwok :
Application No. 10/815,673 :
Filed: April 2, 2004 :
Attorney Docket No. 016660-214 :

ON PETITION

This is a decision on the papers styled, "Petition Under 37 CFR 1.181 To Expunge Assignment Records," filed December 6, 2005, which must be treated as a petition under 37 CFR 1.182.[1]

The petition is **dismissed**.

Petitioner has submitted $130.00. However, the required petition fee under 37 CFR 1.17(f) for a petition under 37 CFR 1.182 is $400.00. As such, the petition cannot be reviewed on the merits at this time. Petitioner should submit an additional $270.00.

Further correspondence with respect to this matter should be addressed as follows:

By mail: Mail Stop Petition
Commissioner for Patents
Box 1450
Alexandria, VA 22313

By FAX: (571) 273-8300
Attn: Office of Petitions

By hand: Customer Service Window
Randolph Building
401 Dulany Street
Alexandria, VA 22314

[1] Additionally, please note MPEP 323.01(d), Expungement of Assignment Records.

Telephone inquiries should be directed to the undersigned at (571) 272-3228.

Edward J. Tannouse
Petitions Attorney
Office of Petitions
Office of the Deputy Commissioner
for Patent Examination Policy

UNITED STATES PATENT AND TRADEMARK OFFICE

Commissioner for Patents
United States Patent and Trademark Office
P.O. Box 1450
Alexandria, VA 22313-1450
www.uspto.gov

BUCHANAN, INGERSOLL & ROONEY PC
POST OFFICE BOX 1404
ALEXANDRIA, VA 22313-1404

COPY MAILED

SEP 29 2006

OFFICE OF PETITIONS

In re Application of	:	
Hoi-Sing Kwok	:	
Application No. 10/815,673	:	
Filed: April 2, 2004	:	ON PETITION
Title of Invention:	:	
PROJECTOR WITH FLAT	:	
LIGHT SOURCES	:	

This is a decision on the correspondence filed January 11, 2006, in response to a Decision dismissing a petition filed December 6, 2005. The correspondence is properly treated as a renewed petition to expunge assignment records.

The petition is **dismissed**.

Any further petition to revive the above-identified application must be submitted within TWO (2) MONTHS from the mail date of this decision. Extensions of time under 37 CFR 1.136(a) are permitted. The reconsideration request should include a cover letter entitled "Renewed Petition under 37 CFR 1.181." This is **not** final agency action within the meaning of 5 U.S.C. § 704.

Background

Applicant filed a petition on December 6, 2006 to expunge an assignment to a company that does not exist. Applicant avers that none of the procedures set forth in the Manual of Patent Examining Procedure ("MPEP") 323.01(a) through 323.01(c) are applicable here where a legal transfer of rights was not possible, and therefore will not provide adequate relief.

Applicable Law, Rules and MPEP

The MPEP 323.01(d), Expungement of Assignment Records, provides that

> Petitions to correct, modify or "expunge" assignment records are rarely granted. Such petitions are granted only if the petitioner can prove that:
>
> (A) the normal corrective procedures outlined in MPEP § 323.01(a) through § 323.01(c) will not provide the petitioner with adequate relief; and
>
> (B) the integrity of the assignment records will not be affected by granting the petition.
>
> Even if a petition to "expunge" a document is granted with respect to a particular application or patent, the image of the recorded document will remain in the records of the Assignment Services Division at the same reel and frame number, and the image will appear when someone views that reel and frame number. The Office will, however, delete the links to the application or patent that was the subject of the petition, so that no information about the recorded document will appear when someone searches for that application or patent number in the Assignment Historical Database.

In this instance petition asserts that none of the procedures set forth in the Manual of Patent Examining Procedure ("MPEP") 323.01(a) through 323.01(c) are applicable here because a legal transfer of rights was not possible.

Analysis

The procedures set forth in § 323.01(c) provide a method whereby an owner may correct an improperly recorded assignment or name change.

In this instance, Applicant asserts that correction of the assignment record in accordance with 323.01(c) will not provide adequate relief because a legal transfer of rights was not possible.

This Office fails to understand the relationship between whether a legal transfer of rights actually occurred and correction of erroneous information in the assignment record. In an analogous instance, where another party has improperly recorded an

assignment or name change against the owner' s application or patent, no legal transfer of rights occurs.

Here, the recorded assignment was to a company that does not exist. As such, no legal transfer of rights occurred and the assignment contained erroneous information and was improperly recorded. As previously noted, the procedures set forth in § 323.01(c) provide a method whereby an owner may correct an improperly recorded assignment or name change.

The MPEP § 323 provides:

> Office policy regarding recordation of assignment documents is directed toward maintaining a complete history of claimed interests in property and, therefore, recorded assignment documents will not be expunged even if subsequently found to be invalid. See In re Ratny, 24 USPQ2d 1713 (Comm'r Pat. 1992). Once a document is recorded with the Assignment Services Division, the Assignment Services Division will not remove the papers from the record relating to that application or patent. See MPEP § 323.01(d).

Further correspondence with respect to this matter should be addressed as follows:

By mail: Commissioner for Patents
PO Box 1450
Alexandria, VA 22313-1450

By FAX: (703) 872-9306
Attn: Office of Petitions

By hand: 2201 South Clark Place
Customer Window
Crystal Plaza Two, Lobby Room 1B03
Arlington, VA 22202

Telephone inquiries concerning this decision should be directed to the undersigned at (571) 272-3232.

Derek L. Woods
Attorney
Office of Petitions

UNITED STATES PATENT AND TRADEMARK OFFICE

Commissioner for Patents
United States Patent and Trademark Office
P.O. Box 1450
Alexandria, VA 22313-1450
www.uspto.gov

HARNESS DICKEY & PIERCE PLC
P O BOX 8910
RESTON, VA 20195

COPY MAILED

JAN 0 2 2008

OFFICE OF PETITIONS

In re Application of :
Makoto Shiomi et al :
Application No. 10/815,693 : DECISION GRANTING PETITION
Filed: April 2, 2004 : UNDER 37 CFR 1.313(c)(2)
Attorney Docket No. 12480-000038/US :

This is a decision on the petition, filed December 28, 2007, under 37 CFR 1.313(c)(2) to withdraw the above-identified application from issue after payment of the issue fee.

The petition is **GRANTED**.

The above-identified application is withdrawn from issue for consideration of a submission under 37 CFR 1.114 (request for continued examination). See 37 CFR 1.313(c)(2).

Petitioner is advised that the issue fee paid on November 20, 2007 in the above-identified application cannot be refunded. If, however, the above-identified application is again allowed, petitioner may request that it be applied towards the issue fee required by the new Notice of Allowance.[1]

Telephone inquiries should be directed to the undersigned at (571) 272-3218.

This matter is being referred to Technology Center AU 2629 for processing of the request for continued examination under 37 CFR 1.114 and for consideration of the Information Disclosure Statement.

Frances Hicks
Petitions Examiner
Office of Petitions

C:\Documents and Settings\fhicks\My Documents\470\dec11\815693.wpd

---

[1] *The request to apply the issue fee to the new Notice may be satisfied by completing and returning the new Part B – Fee(s) Transmittal Form (along with any balance due at the time of submission). Petitioner is advised that the Issue Fee Transmittal Form must be completed and timely submitted to avoid abandonment.*

UNITED STATES PATENT AND TRADEMARK OFFICE

Commissioner for Patents
United States Patent and Trademark Office
P.O. Box 1450
Alexandria, VA 22313-1450
www.uspto.gov

ANTONELLI, TERRY, STOUT & KRAUS
1300 NORTH SEVENTEENTH STREET
SUITE 1800
ARLINGTON VA 22209-3873

COPY MAILED
MAY 15 2006
OFFICE OF PETITIONS

In re Application of	:	
Tsuyoshi Wakuda et al	:	
Application No. 10/815,706	:	ON PETITION
Filed: April 2, 2004	:	
Attorney Docket No. 520.43727X00	:	

This is a decision on the petition, filed May 12, 2006, under 37 CFR 1.313(c)(2) to withdraw the above-identified application from issue after payment of the issue fee.

The petition is **GRANTED.**

The above-identified application is withdrawn from issue for consideration of a submission under 37 CFR 1.114 (request for continued examination). See 37 CFR 1.313(c)(2).

Petitioner is advised that the issue fee paid on February 17, 2006, in the above-identified application cannot be refunded. If, however, the above-identified application is again allowed, petitioner may request that it be applied towards the issue fee required by the new Notice of Allowance.[1]

Telephone inquiries should be directed to the undersigned at (571) 272-3208.

The examiner of Technology Center AU 2859 will consider the request for continued examination under 37 CFR 1.114.

Karen Creasy
Petitions Examiner
Office of Petitions

---

[1] The request to apply the issue fee to the new Notice may be satisfied by completing and returning the new Issue Fee Transmittal Form PTOL-85(b), which includes the following language thereon: "Commissioner for Patents is requested to apply the Issue Fee and Publication Fee (if any) or re-apply any previously paid issue fee to the application identified above." Petitioner is advised that, whether a fee is indicated as being due or not, the Issue Fee Transmittal Form **must** be completed and timely submitted to avoid abandonment. Note the language in bold text on the first page of the Notice of Allowance and Fee(s) Due (PTOL-85).

UNITED STATES PATENT AND TRADEMARK OFFICE

Commissioner for Patents
United States Patent and Trademark Office
P.O. Box 1450
Alexandria, VA 22313-1450
www.uspto.gov

EDWARDS ANGELL PALMER & DODGE LLP
P.O. BOX 55874
BOSTON, MA 02205

COPY MAILED

JUN 2 0 2008

OFFICE OF PETITIONS

In re Application of	:	
Shotaro YAMAGUCHI	:	
Application No. 10/815,774	:	ON PETITION
Filed: April 2, 2004	:	
Attorney Docket No. 80517(302730)	:	

This is a decision on the petition under the unintentional provisions of 37 CFR 1.137(b), filed April 7, 2008, to revive the above-identified application.

The petition is **GRANTED**.

The application became abandoned for failure to timely file a reply within the meaning of 37 CFR 1.113 to the final Office action of June 14, 2007. The proposed reply required for consideration of a petition to revive must be a Notice of Appeal (and appeal fee required by 37 CFR 41.20(b)(2), an amendment that *prima facie* places the application in condition for allowance, a Request for Continued Examination and submission (37 CFR 1.114), or the filing of a continuing application under 37 CFR 1.53(b). See MPEP 711.03(c)(II)(A)(2). A two (2) month and a three (3) month extension of time pursuant to the provisions of 37 CFR 1.136(a) were obtained. Accordingly, the date of abandonment of this application is February 15, 2008.

The petition satisfies the requirements of 37 CFR 1.137(b) in that petitioner has supplied (1) the reply in the form of a Request for Continued Examination (RCE) and fee of $810, and the submission required by 37 CFR 1.114; (2) the petition fee of $1540; and (3) the required statement of unintentional delay have been received.

It is not apparent whether the person signing the statement of unintentional delay was in a position to have firsthand or direct knowledge of the facts and circumstances of the delay at issue. Nevertheless, such statement is being treated as having been made as the result of a reasonable inquiry into the facts and circumstances of such delay. See 37 CFR 10.18(b) and Changes to Patent Practice and Procedure; Final Rule Notice, 62 Fed. Reg. 53131, 53178 (October 10, 1997), 1203 Off. Gaz. Pat. Office 63, 103 (October 21, 1997). In the event that

such an inquiry has not been made, petitioner must make such an inquiry. If such inquiry results in the discovery that it is not correct that the entire delay in filing the required reply from the due date for the reply until the filing of a grantable petition pursuant to 37 CFR 1.137(b) was unintentional, petitioner must notify the Office.

Telephone inquiries concerning this decision should be directed to Diane Goodwyn at (571) 272-6735.

This application is being referred to Technology Center AU 1652 for processing of the RCE and for appropriate action by the Examiner in the normal course of business on the amendment submitted in accordance with 37 CFR 1.114.

Thurman Page

Thurman Page
Petitions Examiner
Office of Petitions

UNITED STATES PATENT AND TRADEMARK OFFICE

Commissioner for Patents
United States Patent and Trademark Office
P.O. Box 1450
Alexandria, VA 22313-1450
www.uspto.gov

AUG - 9 2004

JOHN S. HALE, GIPPLE & HALE
6665-A OLD DOMINION DRIVE
MCLEAN, VIRGINIA 22101

In re Application of	:
Manuel Viamonte, Jr.	:
Serial No.: 10/815,779	: PETITION TO MAKE SPECIAL
Filed:July 13, 2004	:
	:

This is in response to applicant's petition filed July 13, 2004, to make the above-identified application special under the provisions of 37 CFR 1.102(c), based on the age of the applicant.

Applicant has satisfied the provisions set forth in M.P.E.P. 708.02, section IV, by the statement submitted. Therefore the petition is **GRANTED**.

The application will be forwarded to the examiner for action on the merits commensurate with this decision.

Should there be any questions with regard to this letter please contact Jean F. Vollano by letter addressed to the Director, Technology Center 1600, PO BOX 1450, ALEXANDRIA, VA 22313-1450, or by telephone at 571-272-0648 or by facsimile transmission to the general Office facsimile number.

Jean F Vollano

Jean F. Vollano
Special Program Examiner
Technology Center 1600

UNITED STATES PATENT AND TRADEMARK OFFICE

COMMISSIONER FOR PATENTS
UNITED STATES PATENT AND TRADEMARK OFFICE
P.O. BOX 1450
ALEXANDRIA, VA 22313-1450
www.uspto.gov

MCDERMOTT WILL & EMERY LLP
600 13TH STREET, N.W.
WASHINGTON, DC 20005-3096

COPY MAILED
APR 2 0 2006
OFFICE OF PETITIONS

In re Application of :
Yoshito Date, et al. :
Application No. 10/815,800 : ON PETITION
Filed: April 2, 2004 :
Attorney Docket No.: 60188-813 :

This is a decision on the petition, filed April 19, 2006, under 37 CFR 1.313(c)(2) to withdraw the above-identified application from issue after payment of the issue fee.

The petition is **GRANTED**.

The above-identified application is withdrawn from issue for consideration of a submission under 37 CFR 1.114 (request for continued examination). See 37 CFR 1.313(c)(2).

Petitioner is advised that the issue fee paid on March 17, 2006, in the above-identified application cannot be refunded. If, however, the above-identified application is again allowed, petitioner may request that it be applied towards the issue fee required by the new Notice of Allowance. [1]

Telephone inquiries relating to this decision should be directed to the undersigned at (571) 272-3204.

The application is being referred to Technology Center AU 2816 for further processing of the request for continued examination under 37 CFR 1.114.

Sherry D. Brinkley
Petitions Examiner
Office of Petitions

[1]The request to apply the issue fee to the new Notice may be satisfied by completing and returning the new Issue Fee Transmittal Form PTOL-85(b), which includes the following language thereon: "Commissioner for Patents is requested to apply the Issue Fee and Publication Fee (if any) or re-apply any previously paid issue fee to the application identified above." Petitioner is advised that, whether a fee is indicated as being due or not, the Issue Fee Transmittal Form **must** be completed and timely submitted to avoid abandonment. Note the language in bold text on the first page of the Notice of Allowance and Fee(s) Due (PTOL-85).

UNITED STATES PATENT AND TRADEMARK OFFICE

Commissioner for Patents
United States Patent and Trademark Office
P.O. Box 1450
Alexandria, VA 22313-1450
www.uspto.gov

HUNTON & WILLIAMS LLP
SUITE 1200
1900 K STREET, N.W
WASHINGTON, DC 20006-1109

COPY MAILED

JUL 1 8 2008

OFFICE OF PETITIONS

In re Application of	:	
Nicolas SAJOT, et al	:	
Application No. 10/815,914	:	ON PETITION
Filed: April 12, 2004	:	
Attorney Docket No. 58779.000038	:	

This is a decision on the petition under the unintentional provisions of 37 CFR 1.137(b), filed May 20, 2008, to revive the above-identified application.

The petition is **GRANTED**.

The application became abandoned for failure to timely file a reply within the meaning of 37 CFR 1.113 to the final Office action of April 12, 2007. The proposed reply required for consideration of a petition to revive must be a Notice of Appeal (and appeal fee required by 37 CFR 41.20(b)(2), an amendment that *prima facie* places the application in condition for allowance, a Request for Continued Examination and submission (37 CFR 1.114), or the filing of a continuing application under 37 CFR 1.53(b). See MPEP 711.03(c)(II)(A)(2). A three (3) month extension of time pursuant to the provisions of 37 CFR 1.136(a) was obtained. Accordingly, the date of abandonment of this application is October 13, 2007.

The petition satisfies the requirements of 37 CFR 1.137(b) in that petitioner has supplied (1) the reply in the form of a continuing application under 37 CFR 1.53(b); (2) the petition fee of $1540; and (3) an adequate statement of unintentional delay.

37 CFR 1.137(b)(3) requires a statement that "the entire delay in filing the required reply from the due date for the reply until the filing of a grantable petition pursuant to 37 CFR 1.137(b) was unintentional." Since the statement appearing in the petition varies from the language required by 37 CFR 1.137(b)(3), the statement is being construed as the required statement. Petitioner must notify the Office if this is **not** a correct reading of the statement appearing in the petition.

This application is being revived solely for purposes of continuity. As continuity has been established by this decision, the application is again abandoned in favor of continuing application No. 12/124,036.

An extension of time under 37 CFR 1.136 must be filed prior to the expiration of the maximum extendable period for reply. *See* In re Application of S., 8 USPQ2d 1630, 1631 (Comm'r Pats. 1988). Since the $2230 extension of time fee submitted with the petition on May 20, 2008 was subsequent to the maximum extendable period for reply, this fee is unnecessary and will be credited to petitioner's deposit account 50-0206.

Telephone inquiries concerning this decision should be directed to Diane Goodwyn at (571) 272-6735.

Thurman K. Page

Thurman Page
Petitions Examiner
Office of Petitions

UNITED STATES PATENT AND TRADEMARK OFFICE

Commissioner for Patents
United States Patent and Trademark Office
P.O. Box 1450
Alexandria, VA 22313-1450
www.uspto.gov

COPY MAILED

NOV 29 2007

OFFICE OF PETITIONS

TOWNSEND AND TOWNSEND AND CREW, LLP
TWO EMBARCADERO CENTER
EIGHTH FLOOR
SAN FRANCISCO, CA 94111-3834

In re Application of	:	
HAN, Chien-Hsuan et al.	:	
Application No. 10/815,926	:	DECISION ON PETITION
Filed: April 02, 2004	:	TO WITHDRAW
Attorney Docket No. **21077-8**	:	FROM RECORD
	:	

This is a decision on the Request to Withdraw as attorney or agent of record under 37 C.F.R. § 1.36(b), filed October 16, 2007.

The request is **NOT APPROVED** as moot.

A review of the file record indicates that the power of attorney to Townsend and Townsend and Crew, LLP has been revoked by the assignee of the patent application on November 13, 2007. Accordingly, the request to withdraw under 37 C.F.R. § 1.36(b) is moot.

All future communications from the Office will continue to be directed to the below-listed address until otherwise notified by applicant.

Telephone inquires concerning this decision should be directed to the undersigned at 571-272-4231.

Michelle R. Eason

Michelle R. Eason
Paralegal Specialist
Office of Petitions

cc: **PATENT DOCKET ADMINISTRATOR**
LOWENSTEIN SANDLER PC
65 LIVINGSTON AVENUE
ROSELAND, NJ 07068

UNITED STATES PATENT AND TRADEMARK OFFICE

Commissioner for Patents
United States Patent and Trademark Office
P.O. Box 1450
Alexandria, VA 22313-1450
www.uspto.gov

COPY MAILED

JAN 31 2006

OFFICE OF PETITIONS

ROYLANCE, ABRAMS, BERDO & GOODMAN, L.L.P.
1300 19TH STREET, N.W.
SUITE 600
WASHINGTON, DC 20036

In re Application of Riccardelli et al Application No. 10/815,944 Filed: April 2, 2004 Attorney Docket No.: 42186 Title of Invention: Product and Process for Producing a Molded Product From Recycled Carpet Waste	DECISION GRANTING PETITION

This is a decision on the petition filed October 4, 2004, requesting that a Notice Of Omitted Item(s) in a Nonprovisional Application("Notice") mailed September 24, 2004, be withdrawn.

The application was filed on April 2, 2004. However, on September 24, 2004, the Office of Initial Patent Examination (OIPE) mailed a Notice stating that the application had been accorded a filing date of April 2, 2004 but pages 5, 16, 19 of the specification appeared to have been omitted.

In response, the present petition was filed wherein Petitioner contends 27 pages of specification were filed including pages 5, 16, and 19 were filed on April 2, 2004. In support, the petition is accompanied by a copy of applicants' return postcard which lists " Specification 27 pgs". The petition is further accompanied by a copy of pages 5, 16, 19 of the specification.

Applicant's postcard receipt is prima facie evidence that 27 pages of specification (description and claims), including pages 5, 16, 19 were received on April 2, 2004, but pages 5, 16, 19 are not present in the file. Hence, it is clear that the papers for this application were mishandled by the Office. Therefore, it is concluded that pages 5, 16 and 19 of the specification were received on April 2, 2004, as shown in counsel's file, and later misplaced in the office.

The petition is **Granted** to the extent indicated above. The Notice of Missing Parts was correct regarding the need for an oath or

declaration executed by Slater and Raposo. The $130.00 petition fee will be refunded.

Pages 5, 16 and 19 of the specification supplied on October 4, 2004, will be used for processing and examination purposes.

The application is being returned to the Office of Initial Patent Examination for further processing with a filing date of April 2, 2004 using the papers received on that date and the copy of pages 5, 16 and 19 of the specification supplied on October 4, 2004.

Telephone inquiries related to this decision may be directed to the undersigned at (571) 272-3215.

Charlema R. Grant

Charlema R. Grant
Petitions Attorney
Office of Petitions

UNITED STATES PATENT AND TRADEMARK OFFICE

UNITED STATES DEPARTMENT OF COMMERCE
United States Patent and Trademark Office
Address: COMMISSIONER FOR PATENTS
P.O. Box 1450
Alexandria, Virginia 22313-1450
www.uspto.gov

APPLICATION NO.	FILING DATE	FIRST NAMED INVENTOR	ATTORNEY DOCKET NO.	CONFIRMATION NO.
10/815,947	04/02/2004	Wen-Jian Lin	QCO.095A/061114	8942

59747 7590 10/10/2007
KNOBBE, MARTENS, OLSON & BEAR, LLP
2040 MAIN STREET
FOURTEENTH FLOOR
IRVINE, CA 92614

EXAMINER
HANIG, RICHARD E

ART UNIT	PAPER NUMBER
2873	

MAIL DATE	DELIVERY MODE
10/10/2007	PAPER

Please find below and/or attached an Office communication concerning this application or proceeding.

The time period for reply, if any, is set in the attached communication.

8

UNITED STATES PATENT AND TRADEMARK OFFICE

Commissioner for Patents
United States Patent and Trademark Office
P.O. Box 1450
Alexandria, VA 22313-1450
www.uspto.gov

In re Patent No. LIN ET AL.	:	
Issue Date: 10/4/2005	:	**DECISION GRANTING**
Appl No.: 10/815,947	:	**PETITION**
Filed: April 02, 2004	:	*37 CFR 1.324*
For: KNOBBE, MARTENS, OLSON & BEAR, LLP	:	
2040 MAIN STREET	:	
FOURTEENTH FLOOR	:	
IRVINE CA 92614	:	

This is a decision on the petition filed 11/22/2006 to correct inventorship under 37 CFR 1.324.

The petition is granted.

The patented file is being forwarded to Certificate of Corrections Branch for issuance of a certificate naming only the actual inventor or inventors.

Ricky L. Mack
Supervisory Patent Examiner
Art Unit 2873
Technology Center 2800

KNOBBE, MARTENS, OLSON & BEAR, LLP
2040 MAIN STREET
FOURTEENTH FLOOR
IRVINE, CA 92614

UNITED STATES PATENT AND TRADEMARK OFFICE

Commissioner for Patents
United States Patent and Trademark Office
P.O. Box 1450
Alexandria, VA 22313-1450
www.uspto.gov

COPY MAILED
SEP 21 2004
OFFICE OF PETITIONS

VENABLE, BAETJER, HOWARD
AND CIVILETTI, LLP
P.O. BOX 34385
WASHINGTON, DC 20043-9998

In re Application of
Horn, et al.
Application No.10/815,959
Filed: April 2, 2004
Attorney Docket No. 41653-201083

DECISION GRANTING PETITION

This is a decision on the petition filed August 12, 2004, requesting that the above-identified application be accorded a filing date of April 2, 2004, with the thirteen pages of drawings as part of the original disclosure.

On April 2, 2004, the above-identified application was filed. On June 17, 2004, the Office of Initial Patent Examination mailed a "Notice of Incomplete Nonprovisional Application" (the "Notice"), stating that the application had not been accorded a filing date because drawings were not found with the application papers, but believed to be required. The Notice also required an oath or declaration to be filed, and the payment of surcharges, the application filing fee and claim fees. The Notice allowed a non-extendable two-month period for reply beginning from the mailing date of the Notice.

The instant petition was filed on July 14, 2004, with a copy of the drawings, a declaration, and a copy of a postcard date-stamped April 2, 2004, whereby the Office acknowledged receiving 13 sheets of drawings.

Upon review of the record, drawings were located among the original application papers; therefore, the application was entitled to a filing date of April 2, 2004.

Accordingly, the petition is granted; the language in the Notice relative to the omitted drawings is vacated, accordingly.

The declaration filed August 12, 2004, is noted and made of record. The filing fee and additional claims fees remitted are also noted. Deposit account 22-0261 will be charged $130.00 for the late filing of the declaration and late payment of the filing fee.

The application file is being returned to the Office of Initial Patent Examination for further processing with a filing date of April 2, 2004, using the formal drawings filed on that date.

Any inquiries related to this decision should be directed to the undersigned at (703) 305-0010.

Kenya A. McLaughlin
Petitions Attorney
Office of Petitions

OIPE
NOV 18 2005
PATENT & TRADEMARK OFFICE

IFW

AMBU.001A

PATENT

IN THE UNITED STATES PATENT AND TRADEMARK OFFICE

Applicant	:	Marc Alan Robinson
Appl. No.	:	10/815,963
Filed	:	March 31, 2004
For	:	SILVER-PLATINUM ALLOY AND METHODS OF MANUFACTURING SAME
Examiner	:	Unknown
Group Art Unit	:	1742

CERTIFICATE OF MAILING

I hereby certify that this correspondence and all marked attachments are being deposited with the United States Postal Service as first-class mail in an envelope addressed to: Commissioner for Patents, P.O. Box 1450, Alexandria, VA 22313-1450, on

November 16, 2005
(Date)

Linda H. Liu, Reg. No. 51,240

PETITION TO MAKE SPECIAL FOR NEW APPLICATION UNDER 37 C.F.R. § 1.102 AND M.P.E.P § 708.02[II]

Mail Stop PETITION
Commissioner for Patents
P.O. Box 1450
Alexandria, VA 22313-1450

11/21/2005 HNGUYEN1 00000016 10815963
01 FC:1464 130.00 OP

Dear Sir:

Under the provisions of 37 C.F.R. § 1.102 AND M.P.E.P § 708.02[II], Applicant hereby petitions to make special the above-identified application in order to advance its examination in the Patent and Trademark Office. The application has not yet received any examination.

Applicant is filing the petition on grounds that there is an infringing product actually on the market. The infringing product is a silver-platinum metal alloy currently manufactured and marketed by United Precisions Metal Refining Inc. The product is currently marketed under the name "New Age Sterling Silver". A rigid comparison of the composition of the New Age Sterling Silver alloy with the claims of the application has been made, and that, Applicant is of the opinion that some of the claims are unquestionably infringed.

In particular, Applicant believes that the New Age Sterling Silver alloy directly reads on Claims 1, 5, and 9-11 of the above-identified application. For instance, Applicant believes that the New Age Sterling Silver alloy contains every element of Claim 1 including a silver alloy composition comprising about 90% - 95.5% silver and about 0.5%-6% platinum by weight,

PETITION GRANTED

William Krynski
Special Program Examiner
TC1700

UNITED STATES PATENT AND TRADEMARK OFFICE

Commissioner for Patents
United States Patent and Trademark Office
P.O. Box 1450
Alexandria, VA 22313-1450
www.uspto.gov

Schwegman, Lundberg, Woessner & Kluth/Intel
PO Box 2938
Minneapolis, MN 55402

COPY MAILED

JUL 17 2007

OFFICE OF PETITIONS

In re Application of

Scott R. Sahaida et al.
Application No. 10/815,966
Filed: March 31, 2004
Attorney Docket No. 884.C31US1

DECISION ON PETITION
TO WITHDRAW
FROM RECORD

This is a decision on the Request to Withdraw as attorney or agent of record under 37 C.F.R. § 1.36(b), filed January 9, 2007.

The request is **APPROVED**.

A grantable request to withdraw as attorney/agent of record must be signed by every attorney/agent seeking to withdraw or contain a clear indication that one attorney is signing on behalf of another/others. A request to withdraw will not be approved unless at least 30 (thirty) days would remain between the date of approval and the later of the expiration date of a time to file a response or the expiration date of the maximum time period which can be extended under 37 C.F.R. § 1.136(a).

The request was signed by Andrew R. Perel on behalf of all attorneys of record.

All attorneys/agents have been withdrawn.

Applicant is reminded that there is no attorney of record at this time.

The request to change the correspondence of record is not acceptable as the requested correspondence address is not that of: (1) the first named signing inventor; or (2) an intervening assignee of the entire interest under 37 C.F.R 3.71. All future communications from the Office will be directed to the first named signing inventor at the first copied address below until otherwise properly notified by the applicant.

The application became abandoned for failure to timely respond to the Office action mailed December 26, 2006.

Telephone inquiries concerning this decision should be directed to Terri Williams at 571-272-2991.

T. Williams

Terri Williams
Petitions Examiner
Office of Petitions

cc: **Scott R. Sahaida**
2206 Seven Oaks Court
El Dorado Hills, CA 95762

cc: **Kenneth A. Nelson**
Intel Corporation
4500 S. Dobson Road
OC2-157
Chandler, AZ 85248

UNITED STATES PATENT AND TRADEMARK OFFICE

UNITED STATES DEPARTMENT OF COMMERCE
United States Patent and Trademark Office
Address: COMMISSIONER FOR PATENTS
P.O. Box 1450
Alexandria, Virginia 22313-1450
www.uspto.gov

APPLICATION NUMBER	FILING OR 371 (c) DATE	FIRST NAMED APPLICANT	ATTY. DOCKET NO./TITLE
10/815,966	03/31/2004	Scott R. Sahaida	884.C31US1

CONFIRMATION NO. 7702

OC000000024850718

45457
SCHWEGMAN, LUNDBERG, WOESSNER & KLUTH/Intel
PO BOX 2938
MINNEAPOLIS, MN 55402

Date Mailed: 07/17/2007

NOTICE REGARDING CHANGE OF POWER OF ATTORNEY

This is in response to the Power of Attorney filed 01/09/2007.

- The withdrawal as attorney in this application has been accepted. Future correspondence will be mailed to the new address of record. 37 CFR 1.33.

Jessi Williams

Office of Initial Patent Examination (571) 272-4000, or 1-800-PTO-9199

FORMER ATTORNEY/AGENT COPY

UNITED STATES PATENT AND TRADEMARK OFFICE

Commissioner for Patents
United States Patent and Trademark Office
P.O. Box 1450
Alexandria, VA 22313-1450
www.uspto.gov

NIXON & VANDERHYE, P.C.
901 NORTH GLEBE ROAD, 11TH FLOOR
ARLINGTON, VA 22203

COPY MAILED

JUN 04 2007

OFFICE OF PETITIONS

In re Application of	:
James Vogeley	:
Application No. 10/815,975	: DECISION GRANTING PETITION
Filed: April 2, 2004	: UNDER 37 CFR 1.313(c)(2)
Attorney Docket No. 4209-37	:

This is a decision on the petition, filed June 1, 2007, under 37 CFR 1.313(c)(2) to withdraw the above-identified application from issue after payment of the issue fee.

The petition is **GRANTED**.

The above-identified application is withdrawn from issue for consideration of a submission under 37 CFR 1.114 (request for continued examination). See 37 CFR 1.313(c)(2).

Petitioner is advised that the issue fee paid on April 25, 2007 in the above-identified application cannot be refunded. If, however, the above-identified application is again allowed, petitioner may request that it be applied towards the issue fee required by the new Notice of Allowance.[1]

Telephone inquiries should be directed to the undersigned at (571) 272-3218.

This matter is being referred to Technology Center AU 2834 for processing of the request for continued examination under 37 CFR 1.114 and for consideration of the Information Disclosure Statement.

Frances Hicks
Petitions Examiner
Office of Petitions

C:\Documents and Settings\fhicks\My Documents\470\june10\815975.wpd

---

[1] *The request to apply the issue fee to the new Notice may be satisfied by completing and returning the new Part B – Fee(s) Transmittal Form (along with any balance due at the time of submission). Petitioner is advised that the Issue Fee Transmittal Form* ***must*** *be completed and timely submitted to avoid abandonment.*

UNITED STATES PATENT AND TRADEMARK OFFICE

Commissioner for Patents
United States Patent and Trademark Office
P.O. Box 1450
Alexandria, VA 22313-1450
www.uspto.gov

Hamilton, Brook, Smith & Reynolds, P.C.
530 Virginia Road
P.O. Box 9133
Concord, MA 01742-9133

MAILED

APR 0 4 2005

Technology Center 2100

In re Application of:
Michael O. RABIN, et al.
Application No. 10/815,985
Filed: April 1, 2004
For: DETECTION AND IDENTIFICATION METHODS FOR SOFTWARE

DECISION ON PETITION TO MAKE SPECIAL

This is a decision on the petition under 37 C.F.R. § 1.102(c) and M.P.E.P. § 708.02, Section IV: Applicant's Age, filed November 24, 2004 to make the above-identified application special.

A grantable petition to make special under 37 C.F.R. § 1.102(c) and in accordance with M.P.E.P. § 708.02, Section IV must include a showing, as by a birth certificate or the applicant's statement, that the applicant is sixty five (65) years of age or more. No fee is required for this petition.

The petition includes a statement that the applicant, Michael O. Rabin, is over sixty five (65) years of age.

Accordingly, the petition is GRANTED. The application is being forwarded to the examiner for expedite prosecution.

Vincent N. Trans
Special Program Examiner
Technology Center 2100
Computer Architecture, Software, and Information Security
571-272-3613

UNITED STATES PATENT AND TRADEMARK OFFICE

Commissioner for Patents
United States Patent and Trademark Office
P.O. Box 1450
Alexandria, VA 22313-1450
www.uspto.gov

January 29, 2008

Robert J. Depke
ROCKEY, DEPKE, LYONS & KITZINGER, LLC
Suite 5450 Sears Tower
Chicago, IL 60606-6306

Patent No.: 7,053,427 B2
Application No.: 10/816006
Inventor(s): kouichi Tanigawa
Issued: May 30, 2006
Title: **SOLID-STATE IMAGING DEVICE**

Re: Request for Certificate of Correction

Consideration has been given your request for the issuance of a certificate of correction for the above-identified patent under the provisions of Rule(s) 1.322 and/or 1.323.

Assignees' names and addresses (assignment data) printed in a patent, are based *solely* on information supplied in the appropriate space for identifying the assignment data, i.e., item 3 of the Issue Fee Transmittal Form PTOL-85B. Granting of a request under 37 CFR 3.81(b) is required to correct applicant's error providing ***incorrect or erroneous*** assignment data, *before* issuance of a Certificate of Correction, under 37 CFR 1.323 *(see Manual of Patent Examining Procedures (M.P.E.P) Chp.1400, sect. 1481).* This procedure is required *at any time after the issue fee is paid*, including after issuance of the patent.

In view of the foregoing, your request, in this matter, is hereby denied.

A request to correct the Assignee under 37 CFR 3.81(b) should include:

A. **the processing fee set forth in 37 CFR 1.117(h) (currently $130);**
B. a statement that the failure to include the correct assignee name on the PTOL-85B was inadvertent; and
C. a copy of the Notice of Recordation of Assignment Document, reflecting the reel and frame number where the assignment(s) is recorded and/or reflecting proof of *the date* the assignment was submitted for recordation.

In the Request, Applicant(s) may request that the file be forwarded to Certificates of Correction Branch, for issuance of a Certificate of Correction, if the Request is granted.

Any request under 37 CFR 3.81(b) should be directed to the following address or facsimile number:

By mail: Mail Stop PETITIONS
Commissioner for Patents
Post Office Box 1450
Alexandria, VA 22313-1450

By hand: Customer Service Window
Mail Stop Petitions
Randolph Building
401 Dulany Street
Alexandria, VA 22314

By fax: (571) 273-0025
ATTN: Office of Petitions

If a fee (currently $100) was previously submitted for consideration of a Request for Certificate of Correction, under CFR 1.323, to correct assignment data, no additional fee is required.

Virginia Tolbert
For Mary Diggs, Supervisor
Decisions & Certificate of Correction Branch
(703) 305-8309 or (703) **308-9390 ext 113**

vt

UNITED STATES PATENT AND TRADEMARK OFFICE

UNITED STATES DEPARTMENT OF COMMERCE
United States Patent and Trademark Office
Address: COMMISSIONER FOR PATENTS
P.O. Box 1450
Alexandria, Virginia 22313-1450
www.uspto.gov

William S. Frommer, Esq.
FROMMER LAWRENCE & HAUG LLP
745 Fifth Avenue
New York, NY 10151

Mail Date: 05/13/2010

Applicant	: Mikio Ishii	: DECISION ON REQUEST FOR
Patent Number	: 7636394	: RECALCULATION of PATENT
Issue Date	: 12/22/2009	: TERM ADJUSTMENT IN VIEW
Application No	: 10/816,027	: OF WYETH AND NOTICE OF INTENT TO
Filed	: 04/01/2004	: ISSUE CERTIFICATE OF CORRECTION
		:

The Request for Recalculation is **GRANTED** to the extent indicated.

The patent term adjustment has been determined to be **1070** days. The USPTO will *sua sponte* issue a certificate of correction reflecting the amount of PTA days determined by the recalculation.

Prior to the issuance of the certificate of correction, the USPTO will afford patentee an opportunity to be heard and request reconsideration. Accordingly, patentee has **one month or thirty (30) days**, whichever is longer, to file a request for reconsideration of this patent term adjustment calculation. See 35 U.S.C. 154(b)(3)(B)(ii) and 37 CFR 1.322(a)(4). No extensions of time will be granted under 37 CFR 1.136.

Patentee should use document code PET.OP if electronically filing a request for reconsideration of this patent term adjustment calculation. The patentee must also include the information required by 37 CFR 1.705(b)(2) and the fee required by 37 CFR 1.18(e). If patentee does not file a timely request for reconsideration of this patent term adjustment calculation including the information required by 37 CFR 1.705(b)(2) and the fee required by 37 CFR 1.18(e), the USPTO will issue a certificate of correction reflecting the PTA determination noted above.

Patentee should be aware that in order to preserve the right to review in the United States District Court for the District of Columbia of the USPTO patent term adjustment determination, patentee must ensure that he or she also take the steps required under 35 U.S.C. 154(b)(4)(A) in a timely manner. Nothing in the request for recalculation should be construed as providing an alternative time frame for commencing a civil action under 35 U.S.C. 154(b)(4)(A).

Any questions concerning this decision should be directed to the Office of Patent Legal Administration at 571-272-7702.

UNITED STATES PATENT AND TRADEMARK OFFICE

Commissioner for Patents
United States Patent and Trademark Office
P.O. Box 1450
Alexandria, VA 22313-1450
www.uspto.gov

WEINGARTEN, SCHURGIN, GAGNEBIN
& LEBOVICI LLP
TEN POST OFFICE SQUARE
BOSTON MA 02109

COPY MAILED
NOV 15 2006
OFFICE OF PETITIONS

In re Application of	:	
Brian Huff	:	
Application No. 10/816,030	:	DECISION ON PETITION
Filed: April 1, 2004	:	TO WITHDRAW
Attorney Docket No. ACENT-007XX	:	FROM RECORD
	:	

This is a decision on the Request to Withdraw as attorney or agent of record under 37 C.F.R. § 1.36(b) filed June 19, 2006.

The request is **NOT APPROVED**.

A grantable request to withdraw as attorney/agent of record must be signed by every attorney/agent seeking to withdraw or contain a clear indication that one attorney is signing on behalf of another/others. A request to withdraw will not be approved unless at least 30 (thirty) days would remain between the date of approval and the later of the expiration date of a time to file a response or the expiration date of the maximum time period which can be extended under 37 C.F.R. § 1.136(a).

The request cannot be approved because the requesting attorneys cannot withdraw by customer number if the attorneys were not appointed by customer number.

All future communications from the Office will continue to be directed to the above-listed address until otherwise notified by applicant.

Telephone inquiries concerning this decision should be directed to April Wise at 571-272-1642.

April M. Wise
Petitions Examiner
Office of Petitions

cc: MR. BRIAN HUFF
925 LOCUST STREET
COLLEGEVILLE, PA 19426

UNITED STATES PATENT AND TRADEMARK OFFICE

Commissioner for Patents
United States Patent and Trademark Office
P.O. Box 1450
Alexandria, VA 22313-1450
www.uspto.gov

DCM

JUL 29 2004

In re Application of	:	
Venkat Selvamanickam, et al.	:	
Serial Number: 10/816,045	:	PETITION UNDER
Filed: April 1, 2004	:	M.P.E.P.708.02 IX
For: SUPERCONDUCTOR FABRICATION PROCESS	:	

This is in response to the petition filed June 25, 2004, requesting that the above-identified application be granted Special Status under Section 708.02 IX of the MPEP and 37 CFR 1.102 (b) **(no fee required)**.

The request for Special Status considered under Section 708.02 IX of the MPEP is granted because criteria under 37 CFR 1.102(b) has been met.

Accordingly the petition is **GRANTED.**

Marian C. Knode

Marian C. Knode, Special Programs Examiner
Technology Center 1700
Chemical and Materials Engineering

TOLER & LARSON & ABEL L.L.P.
5000 PLAZA ON THE LAKE STE 265
AUSTIN TX 78746

UNITED STATES PATENT AND TRADEMARK OFFICE

Commissioner for Patents
United States Patent and Trademark Office
P.O. Box 1450
Alexandria, VA 22313-1450
www.uspto.gov

CHOATE, HALL & STEWART
EXCHANGE PLACE
53 STATE STREET
BOSTON MA 02109

COPY MAILED

DEC 2 7 2004

OFFICE OF PETITIONS

In re Application of :
Paolo Boccazzi et al :
Application No. 10/816,046 :
Filed: April 1, 2004 :
Attorney Docket No. 0492611-0544 (MIT 10633) :

NOTICE

This is a notice regarding your request for acceptance of a fee deficiency submission under 37 CFR 1.28. On September 1, 1998, the Court of Appeals for the Federal Circuit held that 37 CFR 1.28(c) is the sole provision governing the time for correction of the erroneous payment of the issue fee as a small entity. **See DH Technology v. Synergystex International, Inc. 154 F.3d 1333, 47 USPQ2d 1865 (Fed. Cir. Sept. 1, 1998).**

The Office no longer investigates or rejects original or reissue applications under 37 CFR 1.56. **1098 Off. Gaz. Pat. Office 502 (January 3, 1989).** Therefore, nothing in this Notice is intended to imply that an investigation was done.

Your fee deficiency submission under 37 CFR 1.28 is hereby **ACCEPTED**.

This application no longer qualifies for small entity status. Accordingly, all future fees must be paid at the large entity rate.

Inquiries related to this communication should be directed to the undersigned at (571) 272-3208.

Karen Creasy

Karen Creasy
Petitions Examiner
Office of Petitions
Office of the Deputy Commissioner
for Patent Examination Policy

UNITED STATES PATENT AND TRADEMARK OFFICE

Commissioner for Patents
United States Patent and Trademark Office
P.O. Box 1450
Alexandria, VA 22313-1450
www.uspto.gov

SARA A. CENTIONI
NEXSEN PRUET, LLC
POST OFFICE DRAWER 2426
COLUMBIA, SC 29202-2426

COPY MAILED

SEP 0 9 2004

OFFICE OF PETITIONS

In re Application of :
Brian J. Bagwell :
Application No. 10/816,058 :
Filed: April 1, 2004 :
Attorney Docket No. **32984-1** :

DECISION GRANTING PETITION

This is a decision on the petition filed July 28, 2004, to accord the above-identified application a filing date of April 1, 2004.

On April 1, 2004, the application was deposited.

On July 22, 2004, the Office of Initial Patent Examination mailed a Notice stating that drawings were not present and that a filing date had not been accorded and the filing date would be the date of receipt of the drawings.

In response, the present petition alleges that the drawings did accompany the original application papers. Petitioner also provided statement from persons with knowledge of the filing of the application and a copy of an Office date-stamped postcard acknowledging receipt of an unspecified number of drawings, among other items.

The drawings were not found with the application papers, and the itemization of the postcard is lacking in that it does not indicate how many sheets of drawings were received. It has determined, however, that drawings are not necessary to understand at least one claim within the meaning of the first sentence of 35 USC 113. It has been PTO practice to treat an application that contains at least one process or method claim as an application for which a drawing is not necessary for an understanding of the invention under 35 U.S.C. 113 (first sentence).[1] A review of the record reveals that claim 13 is a method claim. Therefore, the present application is deemed to be an application that does not require a drawing for an understanding of the invention. Accordingly, the application, as filed, is entitled to a filing date. Petitioner must file an amendment requesting entry of the drawings filed July 28, 2004, prior to the first action on the merits.

In view of the above, the petition is **granted.**

The application is being returned to the Office of Initial Patent Examination for further processing with a filing date of April 1, 2004, using only those application papers filed on April 1, 2004.

[1]MPEP 601.01(f).

Any inquiries related to this decision should be directed to the undersigned at (703)305-0010.

Kenya A. McLaughlin
Petitions Attorney
Office of Petitions

UNITED STATES PATENT AND TRADEMARK OFFICE

requesting entry of drawings before 1st OA

Commissioner for Patents
United States Patent and Trademark Office
P.O. Box 1450
Alexandria, VA 22313-1450
www.uspto.gov

OIPE JC24
OCT 01 2004
PATENT & TRADEMARK OFFICE

SARA A. CENTRONI
NEXSEN PRUET, LLC
POST OFFICE DRAWER 2426
COLUMBIA, SC 29202-2426

COPY MAILED

SEP 09 2004

OFFICE OF PETITIONS

In re Application of
Brian J. Bagwell
Application No. 10/816,058
Filed: April 1, 2004
Attorney Docket No. 32984-1

DECISION GRANTING PETITION

This is a decision on the petition filed July 28, 2004, to accord the above-identified application a filing date of April 1, 2004.

On April 1, 2004, the application was deposited.

On July 22, 2004, the Office of Initial Patent Examination mailed a Notice stating that drawings were not present and that a filing date had not been accorded and the filing date would be the date of receipt of the drawings.

In response, the present petition alleges that the drawings did accompany the original application papers. Petitioner also provided statement from persons with knowledge of the filing of the application and a copy of an Office date-stamped postcard acknowledging receipt of an unspecified number of drawings, among other items.

The drawings were not found with the application papers, and the itemization of the postcard is lacking in that it does not indicate how many sheets of drawings were received. It has determined, however, that drawings are not necessary to understand at least one claim within the meaning of the first sentence of 35 USC 113. It has been PTO practice to treat an application that contains at least one process or method claim as an application for which a drawing is not necessary for an understanding of the invention under 35 U.S.C. 113 (first sentence).[1] A review of the record reveals that claim 13 is a method claim. Therefore, the present application is deemed to be an application that does not require a drawing for an understanding of the invention. Accordingly, the application, as filed, is entitled to a filing date. Petitioner must file an amendment requesting entry of the drawings filed July 28, 2004, prior to the first action on the merits.

In view of the above, the petition is **granted.**

The application is being returned to the Office of Initial Patent Examination for further processing with a filing date of April 1, 2004, using only those application papers filed on April 1, 2004.

[1]MPEP 601.01(f).

SEP 1 3 2004

BEST AVAILABLE COPY

Any inquiries related to this decision should be directed to the undersigned at (703)305-0010.

Kenya A. McLaughlin
Petitions Attorney
Office of Petitions

OIPE JC24
OCT 0 1 2004
PATENT & TRADEMARK OFFICE

22141 U.S. PTO
10/816058
040104

PATENT APPLICATION FILING
IN THE UNITED STATES PATENT AND TRADEMARK OFFICE

Transmittal Letter; Patent Application Transmittal Letter; Utility Patent Application Transmittal; Power of Attorney; Formal Drawings; Certificate of Express Mailing; Postcard

In re : Brian Bagwell
Atty Docket : 32984-1
Atty: SARA A. CENTIONI
Title: Compacting Method and Apparatus

APR 1 2 2004

OIPE JC24
OCT 01 2004
PATENT & TRADEMARK OFFICE

UNITED STATES PATENT AND TRADEMARK OFFICE

UNITED STATES DEPARTMENT OF COMMERCE
United States Patent and Trademark Office
Address: COMMISSIONER FOR PATENTS
P.O. Box 1450
Alexandria, Virginia 22313-1450
www.uspto.gov

APPLICATION NUMBER	FILING OR 371 (c) DATE	FIRST NAMED APPLICANT	ATTORNEY DOCKET NUMBER
10/816,058	04/01/2004	J. Brian Bagwell	32984-1

SARA A. CENTIONI
NEXSEN PRUET, LLC
POST OFFICE DRAWER 2426
COLUMBIA, SC 29202-2426

CONFIRMATION NO. 9636
FORMALITIES LETTER
OC000000013303846

Date Mailed: 07/22/2004

NOTICE OF INCOMPLETE NONPROVISIONAL APPLICATION

FILED UNDER 37 CFR 1.53(b)

A filing date has NOT been accorded to the above-identified application papers for the reason(s) indicated below.

All of the items noted below **and a newly executed oath or declaration covering the items must** be submitted within **TWO MONTHS** of the date of this Notice, unless otherwise indicated, or proceedings on the application will be terminated *(37 CFR 1.53(e))*. Replies should be mailed to: Mail Stop Missing Parts, Commissioner for Patents, P.O. Box 1450, Alexandria VA 22313-1450.

The filing date will be the date of receipt of all items required below, unless otherwise indicated. Any assertions that the item(s) required below were submitted, or are not necessary for a filing date, must be by way of petition directed to the attention of the Office of Petitions accompanied by the $130.00 petition fee *(37 CFR 1.17(h))*. If the petition states that the application is entitled to a filing date, a request for a refund of the petition fee may be included in the petition. Petitions should be mailed to: Mail Stop Petitions, Commissioner for Patents, P.O. Box 1450, Alexandria VA 22313-1450.

- The application was deposited without drawings. 35 U.S.C. 113 (first sentence) requires a drawing "where necessary for the understanding of the subject matter sought to be patented." *Applicant should reconsider whether the drawings are necessary under 35 U.S.C. 113 (first sentence).*

Replies should be mailed to: Mail Stop Missing Parts
Commissioner for Patents
P.O. Box 1450
Alexandria VA 22313-1450

A copy of this notice MUST be returned with the reply.

Customer Service Center
Initial Patent Examination Division (703) 308-1202

Response To Notice To File Missing Parts Of Application Filing Date Granted (PTO-1533)(Small Entity)	Docket No. 32984-01

In Re Application Of: **BAGWELL, BRIAN J.**

OCT 0 1 2004 JC24 PATENT & TRADEMARK OFFICE

Application No.	Filing Date	Examiner	Customer No.	Group Art Unit	Confirmation No.
10/816,058	04/01/2004	UNKNOWN		UNKNOWN	

Invention:

COMPACTING METHOD AND APPARATUS

Mail Stop Missing Parts

COMMISSIONER FOR PATENTS:

This is a response to the Notice to File Missing Parts of Application - Filing Date Granted (PTO-1533) mailed on 7/22/04.
Date

Enclosed herewith for filing are the following:

- ☒ A copy of the Notice to File Missing Parts of Application - Filing Date Granted (PTO-1533). **(REQUIRED)**
- ☐ An oath or declaration in compliance with 37 CFR 1.63, including residence information and identifying the application by the above Application Number and Filing Date.
- ☐ A properly signed oath or declaration in compliance with 37 CFR 1.63.
- ☐ An oath or declaration in compliance with 37 CFR 1.63 listing the names of all inventors and signed by the omitted inventor(s), identifying this application by the above Application Number and Filing Date.
- ☐ A verified English translation of the non-English language application papers as originally filed. It is requested that this translation be used as the copy for examination purposes in the United States Patent and Trademark Office.
- ☐ _____ verified small entity declaration(s)
  - ☐ is/are attached.
  - ☐ was/were filed on _____
- ☒ A separate request for refund.
- ☒ Other (list):

AFFIDAVIT OF ANGELINE MARIE COBHB WHO HAS FIRST-HAND KNOWLEDGE THAT ALL ITEMS WERE SUBMITTED. _____ FROM ATTORNEY SARA A. CENTIONI....

Response To Notice To File Missing Parts Of Application Filing Date Granted (PTO-1533)(Small Entity)	Docket No. 32984-01

In Re Application Of: **BAGWELL, BRIAN J.**

Application No.	Filing Date	Examiner	Customer No.	Group Art Unit	Confirmation No.
10/816,058	04/01/2004	UNKNOWN		UNKNOWN	

Invention:

COMPACTING METHOD AND APPARATUS

TO THE COMMISSIONER FOR PATENTS:

Mail Stop Missing Parts

☐ Completion of application fees as calculated below:

☐ Utility application filing fee _____

☐ Design application filing fee _____

☐ Total number of independent claims = _____ _____

☐ Total number of claims = _____ _____

☐ Multiple dependent claims _____

☐ Surcharge for late payment of filing fee and/or late filing of original declaration or oath _____

☐ Petition and fee for filing by other than all the inventors or a person not the inventor _____

☐ Fee for processing an application filed with a non-English language specification _____

☐ Fee for processing and retention of application _____

Total completion of application fees _____

This is a request under the provisions of 37 CFR 1.136(a) to extend the period for filing a response to the above-identified Notice to File Missing Parts of Application. The requested extension is as follows (check time period desired). If an additional time extension is required, please consider this a petition therefor.

☐ One month ☐ Two months ☐ Three months ☐ Four months ☐ Five months

from: _____ until: _____

Date *Date*

Total time extension fees _____

Total fees due _____

P31SMALL/REV02

Response To Notice To File Missing Parts Of Application Filing Date Granted (PTO-1533) (Small Entity)	Docket No. 32984-01

In Re Application Of: **BAGWELL, BRIAN J.**

Application No.	Filing Date	Examiner	Customer No.	Group Art Unit	Confirmation No.
10/816,058	04/01/2004	UNKNOWN		UNKNOWN	

Invention:

COMPACTING METHOD AND APPARATUS

TO THE COMMISSIONER FOR PATENTS:

Mail Stop Missing Parts

The fee of **$130.00** is to be paid as follows:

- ☐ A check in the amount of the fee is enclosed.
- ☒ The Director is hereby authorized to charge any fees which may be required, or credit any overpayment, to Deposit Account No. **080719**
- ☒ If an additional extension of time is required, please consider this a petition therefor and charge any additional fees which may be required to Deposit Account No. **080719**

Sara Centioni

Signature

Dated: **JULY 26, 2004**

SARA A. CENTIONI
REG NO. 50,543
NEXSEN PRUET, LLC
POST OFFICE DRAWER 2426
COLUMBIA, SC 29202-2426
TEL: (803) 771-8900
FAX: (803) 253-8277
SCENTIONI@NEXSENPRUET.COM

I certify that this document and fee is being deposited on July 27, 2004 with the U.S. Postal Service as first class mail under 37 C.F.R. 1.8 and is addressed to the Commissioner for Patents, P.O. Box 1450, Alexandria, VA 22313-1450.

Marie Cobb

Signature of Person Mailing Correspondence

A. MARIE COBB

Typed or Printed Name of Person Mailing Correspondence

cc:

P31SMALL/REV02

OIPE JC24
OCT 0 1 2004
PATENT & TRADEMARK OFFICE

PATENT

IN THE UNITED STATES PATENT AND TRADEMARK OFFICE

In re :	Bagwell, J. Brian	Atty Docket :	32984-01
Serial No.:	10/816,058	Examining Atty:	Unknown
Filing Date:	April 1, 2004	Group Art:	
Title:	Compacting Method and Apparatus		

Commissioner for Patents
Mail Stop Missing Parts
P.O. Box 1450
Alexandria, VA 22313-1450

PETITION

Applicant respectfully petitions that the filing date 04/01/04 be officially accorded to the above listed application. Applicant filed application with all the requisite parts, including a specification as prescribed by 35 U.S.C. 112 containing a description pursuant to §1.171 and at least one claim pursuant to §1.75 and any drawing required by §1.81(a) in the Patent and Trademark Office on 04/01/04, pursuant to 37 CFR 1.53. Applicant attaches as proof the affidavits of attorney of record and assistant for attorney of record.

Dated: July 27, 2004

Sara Centioni

Sara A. Centioni
Reg. No. 50,543
Nexsen Pruet, LLC
Post Office Drawer 2426
Columbia, SC 29202-2426
Tel: (803) 771-8900
scentioni@nexsenpruet.com

Certificate of Transmission by U.S. Mail

I hereby certify that this document is being transmitted via U.S. Mail to the Commissioner for Patents, Mail Stop Missing Parts, P.O. Box 1450, Alexandria, VA 22313-1450.

Marie Cobb
Signature

OIPE JC24
OCT 01 2004
PATENT & TRADEMARK OFFICE

PATENT

IN THE UNITED STATES PATENT AND TRADEMARK OFFICE

In re :	Bagwell, J. Brian	Atty Docket :	32984-01
Serial No.:	10/816,058	Examining Atty:	Unknown
Filing Date:	April 1, 2004	Group Art:	
Title:	Compacting Method and Apparatus		

The Commissioner for Patents
P.O. Box 1450
Alexandria, VA 22313-1450

AFFIDAVIT OF SARA A. CENTIONI

1. My name is Sara A. Centioni.

2. I reviewed the entire patent application, including specification drawings and declaration. thereafter, I signed the application and instructed my assistant, Marie Cobb, to mail the application.

3. I observed the application materials before they were placed in an envelope for mailing and these materials included both the drawings and declaration.

4. I further declare that all statements made herein of my own knowledge are true and that all statements made on information and belief are believed to be true; and further that these statements are made with the knowledge that willful false statements and the like so made are punishable by fine or imprisonment, or both, under Section 1001 of Title 18 of the United States Code, and that such willful false statements may jeopardize the validity of the application or any registration resulting therefrom.

Sara A. Centioni

SWORN and subscribed to before me
this 26 day of July, 2004.

Notary Public for South Carolina
County of Lexington
My Commission expires: 3-15-2006

Certificate of Transmission by U.S. Mail

I hereby certify that this document is being transmitted via U.S. Mail to the Commissioner for Patents, Mail Stop Missing Parts, P.O. Box 1450, Alexandria, VA 22313-1450.

Signature

OIPE JC24
OCT 01 2004
PATENT & TRADEMARK OFFICE

PATENT

IN THE UNITED STATES PATENT AND TRADEMARK OFFICE

In re :	Bagwell, J. Brian	Atty Docket :	32984-01
Serial No.:	10/816,058	Examining Atty:	Unknown
Filing Date:	April 1, 2004	Group Art:	
Title:	Compacting Method and Apparatus		

Commissioner for Patents
P.O. Box 1450
Alexandria, VA 22313-1450

AFFIDAVIT OF A. MARIE COBB

1. My name is A. Marie Cobb.

2. I am a secretary of Nexsen Pruet Jacobs & Pollard, LLC. I have held this position approximately two years.

3. I am specifically assigned to work for Sara A. Centioni, Esquire.

4. As part of my responsibilities, as instructed by Attorney Sara A. Centioni, I prepare and file documents with the U.S. Patent and Trademark Office.

5. On April 1, 2004, Sara A. Centioni gave the file for the above-referenced matter to me and asked that I mail the non-provisional patent application. now listed as Application Serial No. 10/816,058.

6. As instructed, I mailed 32 pages which included the Transmittal, the application, the combined Declaration and Power of Attorney, six sheets of drawings, and a Certificate of Transmission by first class mail. I paper-clipped the entire package and placed it in the mail. To further ensure that the drawings would be not be separated by the U.S. Patent and Trademark Office, I placed the drawings before the Certificate of Mailing.

7. Enclosed is an exact copy of the application as mailed to the U.S. Patent and Trademark Office.

I further declare that all statements made herein of my own knowledge are true and that all statements made on information and belief are believed to be true; and further that these statements are made with the knowledge that willful false statements and the like so made are punishable by fine or imprisonment, or both, under Section 1001 of Title 18 of the United States Code, and that such willful false statements may jeopardize the validity of the application or any registration resulting therefrom.

FURTHER AFFIANT SAYETH NOT.

A. Marie Cobb
Affiant

SWORN and subscribed to before me
this 27th day of July, 2004.

Notary Public for South Carolina
County of Lexington
My Commission expires: 3-15-2006

Certificate of Transmission by U.S. Mail

I hereby certify that this document is being transmitted via U.S. Mail to the Commissioner for Patents, Mail Stop Missing Parts, P.O. Box 1450, Alexandria, VA 22313-1450.

Signature

PATENT APPLICATION TRANSMITTAL LETTER
(Small Entity)

Docket No.
32984-1

OIPE JC24
OCT 0 1 2004
PATENT & TRADEMARK OFFICE

TO THE COMMISSIONER FOR PATENTS

Transmitted herewith for filing under 35 U.S.C. 111 and 37 C.F.R. 1.53 is the patent application of:

BAGWELL, JAMES BRIAN

For: **COMPACTING METHOD AND APPARATUS**

Enclosed are:

- ☒ Certificate of Mailing with Express Mail Mailing Label No. **EV 331626075 US**
- ☒ **SIX** sheets of drawings.
- ☐ A certified copy of a application.
- ☒ Declaration ☒ Signed. ☐ Unsigned.
- ☒ Power of Attorney
- ☐ Information Disclosure Statement
- ☐ Preliminary Amendment
- ☐ Verified Statement(s) to Establish Small Entity Status Under 37 C.F.R. 1.9 and 1.27.
- ☒ Other: **POST CARD**

CLAIMS AS FILED

For	#Filed	#Allowed	#Extra	Rate	Fee
Total Claims	15	- 20 =	0	x $9.00	$0.00
Indep. Claims	2	- 3 =	0	x $43.00	$0.00
Multiple Dependent Claims (check if applicable) ☐					$0.00
				BASIC FEE	$385.00
				TOTAL FILING FEE	$385.00

- ☐ A check in the amount of to cover the filing fee is enclosed.
- ☒ The Director is hereby authorized to charge and credit Deposit Account No. **080719** as described below.
  - ☒ Charge the amount of **$385.00** as filing fee.
  - ☐ Credit any overpayment.
  - ☒ Charge any additional filing fees required under 37 C.F.R. 1.16 and 1.17.
  - ☐ Charge the issue fee set in 37 C.F.R. 1.18 at the mailing of the Notice of Allowance, pursuant to 37 C.F.R. 1.311(b).

Dated: **4/1/04**

Signature

SARA A. CENTIONI
REGISTRATION NO. 50,543
NEXSEN PRUET, LLC
POST OFFICE DRAWER 2426
COLUMBIA, SC 29202-2426
TEL: (803) 771-8900
SCENTIONI@NEXSENPRUET.COM

cc:

Express Mail Label No. EV 3316260[illegible]S

UTILITY PATENT APPLICATION TRANSMITTAL
(Small Entity)

(Only for new nonprovisional applications under 37 CFR 1.53(b))

Docket No.
32984-1

Total Pages in this Submission
32

OIPE JC24
OCT 0 1 2004
PATENT & TRADEMARK OFFICE

TO THE COMMISSIONER FOR PATENTS
Mail Stop Patent Application
P.O. Box 1450
Alexandria, VA 22313-1450

Transmitted herewith for filing under 35 U.S.C. 111(a) and 37 C.F.R. 1.53(b) is a new utility patent application for an invention entitled:

COMPACTING METHOD AND APPARATUS

and invented by:

JAMES BRIAN BAGWELL

If a CONTINUATION APPLICATION, *check appropriate box and supply the requisite information:*

☐ **Continuation** ☐ **Divisional** ☐ **Continuation-in-part (CIP)** of prior application No.: _____

Which is a:

☐ **Continuation** ☐ **Divisional** ☐ **Continuation-in-part (CIP)** of prior application No.: _____

Which is a:

☐ **Continuation** ☐ **Divisional** ☐ **Continuation-in-part (CIP)** of prior application No.: _____

Enclosed are:

Application Elements

1. ☒ Filing fee as calculated and transmitted as described below
2. ☒ Specification having 17 pages and including the following:
   a. ☒ Descriptive Title of the Invention
   b. ☒ Cross References to Related Applications *(if applicable)*
   c. ☐ Statement Regarding Federally-sponsored Research/Development *(if applicable)*
   d. ☐ Reference to Sequence Listing, a Table, or a Computer Program Listing Appendix
   e. ☒ Background of the Invention
   f. ☒ Brief Summary of the Invention
   g. ☒ Brief Description of the Drawings *(if filed)*
   h. ☒ Detailed Description
   i. ☒ Claim(s) as Classified Below
   j. ☒ Abstract of the Disclosure

O I P E JC24
OCT 0 1 2004
PATENT & TRADEMARK OFFICE

UTILITY PATENT APPLICATION TRANSMITTAL
(Small Entity)

(Only for new nonprovisional applications under 37 CFR 1.53(b))

Docket No.
32984-1

Total Pages in this Submission
32

Application Elements (Continued)

3. ☒ Drawing(s) *(when necessary as prescribed by 35 USC 113)*
   a. ☒ Formal Number of Sheets SIX
   b. ☐ Informal Number of Sheets _____
4. ☒ Oath or Declaration
   a. ☒ Newly executed *(original or copy)* ☐ Unexecuted
   b. ☐ Copy from a prior application (37 CFR 1.63(d)) *(for continuation/divisional application only)*
   c. ☒ With Power of Attorney ☐ Without Power of Attorney
   d. ☐ *DELETION OF INVENTOR(S)*
   Signed statement attached deleting inventor(s) named in the prior application, see 37 C.F.R. 1.63(d)(2) and 1.33(b).
5. ☐ Incorporation By Reference *(usable if Box 4b is checked)*
   The entire disclosure of the prior application, from which a copy of the oath or declaration is supplied under Box 4b, is considered as being part of the disclosure of the accompanying application and is hereby incorporated by reference therein.
6. ☐ CD ROM or CD-R in duplicate, large table or Computer Program (Appendix)
7. ☐ Application Data Sheet (See 37 CFR 1.76)
8. ☐ Nucleotide and/or Amino Acid Sequence Submission *(if applicable, all must be included)*
   a. ☐ Computer Readable Form (CFR)
   b. ☐ Specification Sequence Listing on:
      i. ☐ CD-ROM or CD-R (2 copies); or
      ii. ☐ Paper
   c. ☐ Statement(s) Verifying Identical Paper and Computer Readable Copy

Accompanying Application Parts

9. ☐ Assignment Papers (cover sheet & document(s))
10. ☐ 37 CFR 3.73(B) Statement (when there is an assignee)
11. ☐ English Translation Document (if applicable)
12. ☐ Information Disclosure Statement/PTO-1449 ☐ Copies of IDS Citations
13. ☐ Preliminary Amendment
14. ☒ Return Receipt Postcard (MPEP 503) (Should be specifically itemized)
15. ☐ Certified Copy of Priority Document(s) (if foreign priority is claimed)
16. ☒ Certificate of Mailing
    ☐ First Class ☒ Express Mail *(Specify Label No.)*: EV 331626075 US

UTILITY PATENT APPLICATION TRANSMITTAL
(Small Entity)

(Only for new nonprovisional applications under 37 CFR 1.53(b))

Docket No.
32984-1

Total Pages in this Submission
32

Accompanying Application Parts (Continued)

17. ☒ Applicant claims small entity status. See 37 CFR 1.27.

    ☐ (Optional) Small Entity Statement(s) - Specify Number of Statements Submitted: _____

18. ☐ Additional Enclosures *(please identify below)*:

Request That Application Not Be Published Pursuant To 35 U.S.C. 122(b)(2)

19. ☐ Pursuant to 35 U.S.C. 122(b)(2), Applicant hereby requests that this patent application not be published pursuant to 35 U.S.C. 122(b)(1). Applicant hereby certifies that the invention disclosed in this application has not and will not be the subject of an application filed in another country, or under a multilateral international agreement, that requires publication of applications 18 months after filing of the application.

Warning

An applicant who makes a request not to publish, but who subsequently files in a foreign country or under a multilateral international agreement specified in 35 U.S.C. 122(b)(2)(B)(i), must notify the Director of such filing not later than 45 days after the date of the filing of such foreign or international application. A failure of the applicant to provide such notice within the prescribed period shall result in the application being regarded as abandoned, unless it is shown to the satisfaction of the Director that the delay in submitting the notice was unintentional.

UTILITY PATENT APPLICATION TRANSMITTAL
(Small Entity)

(Only for new nonprovisional applications under 37 CFR 1.53(b))

Docket No.
32984-1

Total Pages in this Submission
32

Fee Calculation and Transmittal

CLAIMS AS FILED

For	#Filed	#Allowed	#Extra	Rate	Fee
Total Claims	15	- 20 =	0	x $9.00	$0.00
Indep. Claims	2	- 3 =	0	x $43.00	$0.00
Multiple Dependent Claims (check if applicable) ☐					$0.00
				BASIC FEE	$385.00
OTHER FEE *(specify purpose)*					$0.00
				TOTAL FILING FEE	$385.00

☐ A check in the amount of to cover the filing fee is enclosed.

☒ The Director is hereby authorized to charge and credit Deposit Account No. 080719 as described below.

- ☒ Charge the amount of $385.00 as filing fee.
- ☐ Credit any overpayment.
- ☒ Charge any additional filing fees required under 37 C.F.R. 1.16 and 1.17.
- ☐ Charge the issue fee set in 37 C.F.R. 1.18 at the mailing of the Notice of Allowance, pursuant to 37 C.F.R. 1.311(b).

Dated: APRIL 1, 2004

Sara Centioni

Signature

SARA A. CENTIONI
REGISTRATION NO. 50,543
NEXSEN PRUET, LLC
POST OFFICE DRAWER 2426
COLUMBIA, SC 29202-2426
TEL: (803) 771-8900
SCENTIONI@NEXSENPRUET.COM

cc:

P01USML/REV05

OIPE JC24
OCT 01 2004
PATENT & TRADEMARK OFFICE

Docket No.
32984-1

Declaration and Power of Attorney For Patent Application

English Language Declaration

As a below named inventor, I hereby declare that:

My residence, post office address and citizenship are as stated below next to my name,

I believe I am the original, first and sole inventor (if only one name is listed below) or an original, first and joint inventor (if plural names are listed below) of the subject matter which is claimed and for which a patent is sought on the invention entitled

COMPACTING METHOD AND APPARATUS

the specification of which

(check one)

☒ is attached hereto.

☐ was filed on _____ as United States Application No. or PCT International Application Number _____

and was amended on _____

(if applicable)

I hereby state that I have reviewed and understand the contents of the above identified specification, including the claims, as amended by any amendment referred to above.

I acknowledge the duty to disclose information which is material to patentability as defined in 37 CFR 1.56, including for continuation-in-part applications, material information which became available between the filing date of the prior application and the national or PCT international filing date of the continuation-in-part application.

I hereby claim foreign priority benefits under 35 U.S.C. 119(a)-(d) or (f), or 365(b) of any foreign application(s) for patent, or plant breeder's rights certificate(s), or 365(a) of any PCT International application which designated at least one country other than the United States of America, listed below and have also identified below, by checking the box, any foreign application for patent, inventor's or plant breeder's rights certificate(s), or any PCT international application having a filing date before that of the application on which priority is claimed.

Prior Foreign Application(s)

(Number)	(Country)	(Day/Month/Year Filed)	Priority Not Claimed
			☐
			☐
			☐

I hereby claim the benefit under 35 U.S.C. Section 119(e) of any United States provisional application(s) listed below:

(Application Serial No.)	(Filing Date)
(Application Serial No.)	(Filing Date)
(Application Serial No.)	(Filing Date)

I hereby claim the benefit under 35 U. S. C. Section 120 of any United States application(s), or Section 365(c) of any PCT International application designating the United States, listed below and, insofar as the subject matter of each of the claims of this application is not disclosed in the prior United States or PCT International application in the manner provided by the first paragraph of 35 U.S.C. Section 112, I acknowledge the duty to disclose to the United States Patent and Trademark Office all information known to me to be material to patentability as defined in Title 37, C. F. R., Section 1.56 which became available between the filing date of the prior application and the national or PCT International filing date of this application:

(Application Serial No.)	(Filing Date)	(Status) (patented, pending, abandoned)
(Application Serial No.)	(Filing Date)	(Status) (patented, pending, abandoned)
(Application Serial No.)	(Filing Date)	(Status) (patented, pending, abandoned)

I hereby declare that all statements made herein of my own knowledge are true and that all statements made on information and belief are believed to be true; and further that these statements were made with the knowledge that willful false statements and the like so made are punishable by fine or imprisonment, or both, under Section 1001 of Title 18 of the United States Code and that such willful false statements may jeopardize the validity of the application or any patent issued thereon.

POWER OF ATTORNEY: As a named inventor, I hereby appoint the following attorney(s) and/or agent(s) to prosecute this application and transact all business in the Patent and Trademark Office connected therewith. *(list name and registration number)*

MICHAEL A. MANN 32,825
WILLIAM Y. KLETT, III 41,903
SARA A. CENTIONI 50,543
JOHN B. HARDAWAY, III 26,554
J. HERBERT O'TOOLE 31,404
TOWNSEND M. BELSER, JR. 22,956

Send Correspondence to: **SARA A. CENTIONI**
NEXSEN PRUET, LLC
POST OFFICE DRAWER 2426
COLUMBIA, SC 29202-2426

Direct Telephone Calls to: *(name and telephone number)*
SARA A. CENTIONI (803) 771-8900

Full name of sole or first inventor **J. BRIAN BAGWELL**	
Sole or first inventor's signature Jana Bri Bagwell	Date 4-1-04
Residence **POST OFFICE BOX 1025, DARLINGTON, SC 29532**	
Citizenship **USA**	
Post Office Address **POST OFFICE BOX 1025, DARLINGTON, SC 29532**	

Full name of second inventor, if any	
Second inventor's signature	Date
Residence	
Citizenship	
Post Office Address	

OIPE JC24
OCT 01 2004
PATENT & TRADEMARK OFFICE

PATENT

COMPACTING METHOD AND APPARATUS

Inventor: Brian Bagwell

Address: PO Box 1025

Darlington, SC 29532

USA

Citizenship: U.S.

CROSS REFERENCE TO RELATED APPLICATIONS: Not applicable.

STATEMENT REGARDING FEDERALLY SPONSORED RESEARCH OR DEVELOPMENT: Not applicable.

REFERENCE TO A SEQUENCE LISTING, A TABLE, OR A COMPUTER PROGRAM LISTING COMPACT DISK APPENDIX: Not Applicable.

BACKGROUND OF THE INVENTION:

[0001] The present invention relates to a compacting method and apparatus, and, in particular, a compacting method and apparatus employing the use of a forklift.

[0002] A major concern of metropolitan areas is refuse collection. Typically, industries within these areas incur significant expenses to collect and remove refuse. Current refuse collection systems involve the collection of refuse from local points and the transportation of this refuse to a disposal site located remote to the local points. Because of the hassle and inconvenience involved in refuse collection, these refuse collection systems are typically operated by independent contractors that will charge a fee based on various parameters, including the amount of trips that must be made to the disposal sites.

[0003] In the case that a refuse collection fee is directly related to the amount of pickups and the amount of filled refuse containers being picked up, it becomes desirable to pack as much refuse as possible into the containers. Accordingly, a device

sometimes used in refuse collection systems is a hydrolic packing ram. Although packing rams generally function to compact the refuse in containers, these rams tend to be very expensive and must be permanently installed and occupy valuable space. Additionally, packing rams require maintenance and electric service.

[0004] Accordingly, there remains a need for an inexpensive and effective refuse collection system.

SUMMARY OF THE INVENTION:

[0005] The following presents a simplified summary of the invention in order to provide a basic understanding of some aspects of the invention. This summary is not an extensive overview of the invention. It is not intended to identify key or critical elements of the invention or to delineate the scope of the invention. Its sole purpose is to present some concepts of the invention in a simplified form as a prelude to the more detailed description that is presented later.

[0006] According to its major aspects and briefly stated, the present invention is a method and system for compacting refuse in refuse containers such as roll off containers. As used herein, the term "roll off containers" refers to a refuse receptacle having an open top that is adapted to be carried by a vehicle, such as a truck. These receptacles are also referred to as "box rollers." The present system includes a forklift apparatus, which is used to engage a compaction weight. Once engaged, the compaction weight is placed over the open top of a roll off container including refuse.

Next, the compaction weight is lowered into the container by the forklift so as to compact the refuse.

[0007] A feature of the present invention is the use of a compaction method and system, which includes the combination of a forklift apparatus and a compaction weight. Heretofore, forklifts have been used primarily to lift and transport objects. However, the present invention permits a forklift to be used for the additional task of compacting, which was previously beyond its applicability. Additionally, the combination of a forklift apparatus with a compaction weight provides a relatively simple and economic way of compacting refuse in a receptacle such as a roll off container. As discussed, refuse compactors such as packing rams tend to be both expensive and complex. Further, packing rams must be permanently fixed and occupy valuable docking space for loading and unloading freight. In the present invention, the compaction system is portable and is 75% less than the cost of hydrolic packing rams. Moreover, the compaction system does not require any complicated machinery or special operator skill to implement. Finally, the compaction system can be conveniently stored and transported.

[0008] Another feature of the present invention is the use of a compaction weight that is dimensioned to be engaged by a forklift apparatus. The particular dimensions of the compaction weight contribute to the ease and simplicity of the compaction method and system. Furthermore, safety features can be included to the compaction weight to ensure that the forklift apparatus safely and effectively compacts the refuse in a receptacle without misplacing or dropping the weight during compaction.

[0009] Yet another feature of the present invention is the use of a compaction weight that is dimensioned to be received by a roll off container. The dimensions of the compaction weight can be particularly suited for compacting refuse within the roll off container. Therefore, the refuse can be most effectively and efficiently compacted without the need for multiple or complex compacting steps.

[0010] Other features and advantages of the present invention will be apparent to those skilled in the art from a careful reading of the Detailed Description of the Invention presented below and accompanied by the drawings.

BRIEF DESCRIPTION OF THE DRAWINGS:

In the drawings,

[0011] FIG. 1 is a side elevational view of a forklift apparatus and a compaction weight of a compaction system according to a preferred embodiment of the present invention;

[0012] FIG. 2 is a perspective view of a compaction weight according to a preferred embodiment of the present invention;

[0013] FIG. 3 is a side cross sectional view taken at Line 3-3 of FIG. 2 of a compaction weight according to a preferred embodiment of the present invention;

[0014] FIG. 4A is a front cross sectional view taken at Line 2-2 of FIG. 2 of a compaction weight according to a preferred embodiment of the present invention;

[0015] FIG. 4B and 4C are alternative detailed cross sectional views of the tine-receiving channels, according to a preferred embodiment of the present invention;

[0016] FIG. 5 is a perspective view of a safety feature of a compaction system according to a preferred embodiment of the present invention;

[0017] FIG. 6A is a side elevational view of a forklift apparatus and a compaction weight of a compaction system, with tines inserted in the channels of the compaction weight, according to a preferred embodiment of the present invention;

[0018] FIG. 6B is a side elevational view of a compaction system and a refuse receptacle, with compaction weight shown lifted by fork lift, according to a preferred embodiment of the present invention;

[0019] FIG. 6C is a side elevational view of a compaction system and a refuse receptacle, with lifted compaction weight poised over refuse receptacle, according to a preferred embodiment of the present invention;

[0020] FIG. 6D is a side elevational view of a compaction system with a refuse receptacle shown during compaction according to a preferred embodiment of the present invention;

[0021] FIG. 6E is a side elevational view of a compaction system with a refuse receptacle shown after compaction according to a preferred embodiment of the present invention;

[0022] FIG. 7 is a flow chart of a process according to a preferred embodiment of the present method.

DETAILED DESCRIPTION OF THE INVENTION:

[0023] Referring now to FIG. 1, there is shown a compaction system **10** of the present invention. As illustrated, the compaction system **10** includes a forklift apparatus **12** and a compaction weight **14**. The particular features of the forklift apparatus **12** are not critical. Generally, the forklift apparatus **12** can include a conventional forklift chassis **16** including a frame being conventionally mounted upon a wheel assembly including axle members (not shown) and wheel members **17**. A conventional drive assembly is conventionally mounted to the conventional forklift chassis **16** and includes a steering mechanism **18** and a foot pedal **20** being functionally and conventionally positioned at the front end of the forklift chassis **16**. Forklift apparatus **12** further includes a seat **22** for a forklift operator. Finally, a conventional lift assembly **24**

including a plurality of lifting tines **26** is movably and conventionally mounted upon a mast **27** located at the front end of the forklift chassis **16**.

[0024] The compaction weight **14** of the present invention is shown in detail in FIGS. 2-4. As illustrated, the compaction weight **14** generally has a box-like shape including a top surface **30** and an opposing bottom surface **31**, which are connected along the edges by side walls, **32**, **33**, **34**, **35** perpendicular to the top surface **30** and bottom surface **31**. Although no particular material is required for the construction of the compaction weight, preferably, the weight is made of a type of metal suitable for industrial applications, such as steel. On the top surface **30**, the compaction weight **14** carries means for engaging **40** forklift tines **26** such as channels **40**. Channels **40** are dimensioned to receive the tines **26** whereby the tines **26** are inserted into plural apertures **42**. Although channels **40** are shown in FIG. 4A as being carried on the top surface **30** such as by welding; alternatively, channels **40'** could be formed integrally with the top surface **30'**, as shown in FIG. 4B. Additionally, channels **40"** could be formed integrally beneath the top surface **30"** so that channels **40"** are built into the body of the compaction weight **14**, as shown by FIG. 4C. What is important to the practice of the invention is that the tines **26** of the forklift apparatus **12** include apertures in channels **40** dimensioned and formed to receive tines **26** so as to engage and support the compaction weight **14**.

[0025] Within its outer surfaces, the compaction weight **14** is hollow and adapted to receive a mass to add the sufficient amount of weight for the practice of the present

compaction method. For example, the compaction weight **14** can include plated steel, as well as crushed asphalt or cement. Additionally, the compaction weight **14** can include a flowable mass, such as water or sand. The particular material that is included within the weight **14** will depend on both the types of refuse being compacted, as well as the lifting power of forklift apparatus **10** employed. In making the compaction weight, the top surface **30** of the weight can be welded onto the weight after the weight **14** is appropriately filled with mass. Alternatively, the compaction weight **14** can include an inlet or port **44** that can receive flowable mass.

[0026] A particular feature of the present invention is the use of a compaction method and system, which includes the combination of the forklift apparatus **12** and the compaction weight **14**. Heretofore, forklifts have been used primarily to lift and transport objects. However, the present invention permits a forklift to be used for the additional task of compacting, which was previously beyond its applicability. Additionally, the combination of forklift apparatus **12** with compaction weight **14** provides a relatively simple and economic way of compacting refuse in a receptacle such as a roll off container. Because refuse compactors such as packing rams tend to be both expensive and complex and can take up a large amount of space within the receptacle, the compaction system **10** of the present invention is advantageous because it takes up no space within the refuse receptacle so that the receptacle can hold as much refuse as can be packed into it. Moreover, the compaction system **10** does not require any complicated machinery or special operator skill to implement.

[0027] As shown in FIG. 3, the compaction weight **14** of the present invention can also include means for securing compaction weight **14** to forklift apparatus **10**, such as a cable or a chain **46**. Chain **46** adds a safety feature to the compaction system **10**, because it ensures that compaction weight **14** remains engaged to the forklift apparatus **12** during operation.

[0028] As previously discussed, another feature of the present invention is the use of compaction weight **14** dimensioned to be engaged by forklift apparatus **12**. The particular dimensions of the compaction weight **14** contribute to the ease and simplicity of the compaction method and system. Furthermore, the use of the chain **46** contributes to the safe and effective compacting of refuse in a receptacle, and minimizes the concern of misplacing or dropping the weight **14** during compaction.

[0029] In use, as shown in FIG. 5, the chain **46** is wrapped around a rigid member that forms part of the forklift apparatus **12** such as a tine support **50**. Further, FIG. 5 shows how the tines **26** of the forklift apparatus **12** fit telescopically within the channels **40** to provide a secure and effective hold on the compaction weight **14**.

[0030] FIGS. 6A-6E illustrate the compaction method of the present invention, and FIG. 7 provides a flow chart summarizing this process. As shown, the forklift apparatus **12** engages the compaction weight **14**. In particular, the tines **26** of the forklift apparatus **12** are lifted by the forklift operator to an elevation that is level with the channels **40** of the compaction weight **14**. Next, the tines **26** are inserted into the

apertures **42** of the engaging means **40**. Optionally, the chain **46** is attached to the forklift apparatus **12**.

[0031] Once the compaction weight **14** has been effectively secured to the forklift apparatus **12**, the lift assembly **24** operates to lift the compaction weight **14** to an elevation that will be sufficient to clear the top edge of a roll off container **60**. The compaction weight **14** is next brought forward by the forklift apparatus **12** so that the compaction weight **14** is directly above refuse **62** contained by the roll off container **60**. To compact the refuse, the compaction weight **14** is simply lowered into the roll off container **60**. Finally, the compaction weight **14** is lifted and removed by the forklift apparatus **12** leaving behind a compacted roll off container **60**. Thereafter, additional refuse **62** can be added to the roll off container **60**, and the compacting steps can be repeated until the roll off container **60** is filled with compacted refuse.

[0032] Although the particular dimensions of the compaction weight **14** are not critical to the practice of the invention, preferably, the compaction weight **14** is dimensioned to be received by or fit within a standard roll off container **60**. Accordingly, the length, width, and depth of the compaction weight **14** is such that the roll off container **60** can receive compaction weight **14**. For example, the length of the compaction weight **14** taken along the longitudinal horizontal axis at Line 2-2, shown in FIG. 2, is preferably less than the length of the roll off container **60** taken along its longitudinal horizontal axis. Standard roll off containers **60** range from approximately 22 feet in length, approximately 6 to approximately 8 feet in width, approximately 4 to

approximately 7 feet in depth. Generally, these roll off containers exist in three main sizes that are capable of handle 20, 30, and 40 yards of volume of refuse.

[0033] It will be apparent to those skilled in the art that many changes and substitutions can be made to the preferred embodiment herein described with departing from the spirit and scope of the present invention as defined by the appended claims.

WHAT IS CLAIMED IS:

1. A compaction system, comprising:

a forklift apparatus; and

a compaction weight, wherein said forklift has a plurality of tines and wherein said compaction weight has means for engaging said plurality of tines so that said forklift apparatus can lift said compaction weight.

2. The compaction system as recited in claim **1**, wherein said engaging means is dimensioned to receive said plurality of tines.

3. The compaction system as recited in claim **1**, wherein said compaction weight includes a top surface, an opposing bottom surface, and side walls that are perpendicular to said top surface and said bottom surface and that connect said top surface and said bottom surface.

4. The compaction system as recited in claim **3**, wherein said engaging means is formed integrally with said top surface.

5. The compaction system as recited in claim **3**, wherein said engaging means is carried on top of said top surface.

6. The compaction system as recited in claim **1**, further comprising means for securing said compaction weight to said forklift apparatus.

7. A compaction system, comprising:

a forklift apparatus having a plurality of tines ; and

a compaction weight having means for engaging said plurality of tines; and

a roll off container, wherein said compaction weight is dimensioned to be received by said roll off container.

8. The compaction system as recited in claim **7**, wherein said engaging means is dimensioned to receive said plurality of tines.

9. The compaction system as recited in claim **7**, wherein said compaction weight includes a top surface, an opposing bottom surface, and side walls that are perpendicular to said top surface and said bottom surface and that connect said top surface and said bottom surface along the edges of said top surface and said bottom surface.

10. The compaction system as recited in claim **9**, wherein said engaging means is formed integrally with said top surface.

11. The compaction system as recited in claim **9**, wherein said engaging means is carried on top of said top surface.

12. The compaction system as recited in claim **7**, further comprising means for securing said compaction weight to said forklift apparatus.

13. A method for compacting refuse within a roll off container, comprising the steps of:

providing a roll off container with an open top;

placing refuse in said roll off container;

providing a forklift apparatus having a plurality of tines;

providing a compaction weight having channels formed therein;

elevating said plurality of tines to the same elevation of said channels;

inserting said plurality of tines within said channels;

elevating said compaction weight with said forklift apparatus to an elevation that is above the top edge of a roll off container;

moving said compaction weight with said forklift apparatus over said roll off container; and

lowering said compaction weight with said forklift apparatus onto said refuse in said roll off container to compact said refuse.

14. The method for compacting as recited in claim **13**, further comprising the step of securing said compaction weight to said forklift apparatus.

15. The method for compacting as recited in claim **13**, further comprising the steps of:

elevating said compaction weight with said forklift apparatus after said lowering step;

filling said compacted roll off container with additional refuse; and

repeating said lowering steps to compact said additional refuse.

ABSTRACT OF THE DISCLOSURE:

A compaction system and method including a forklift apparatus that engages a compaction weight. The compaction weight is lifted by the forklift apparatus over the open top of a roll off container. Thereafter, the weight is lowered into the roll off container to compact the refuse within the roll off container.

OIPE JC24
OCT 01 2004
PATENT & TRADEMARK OFFICE

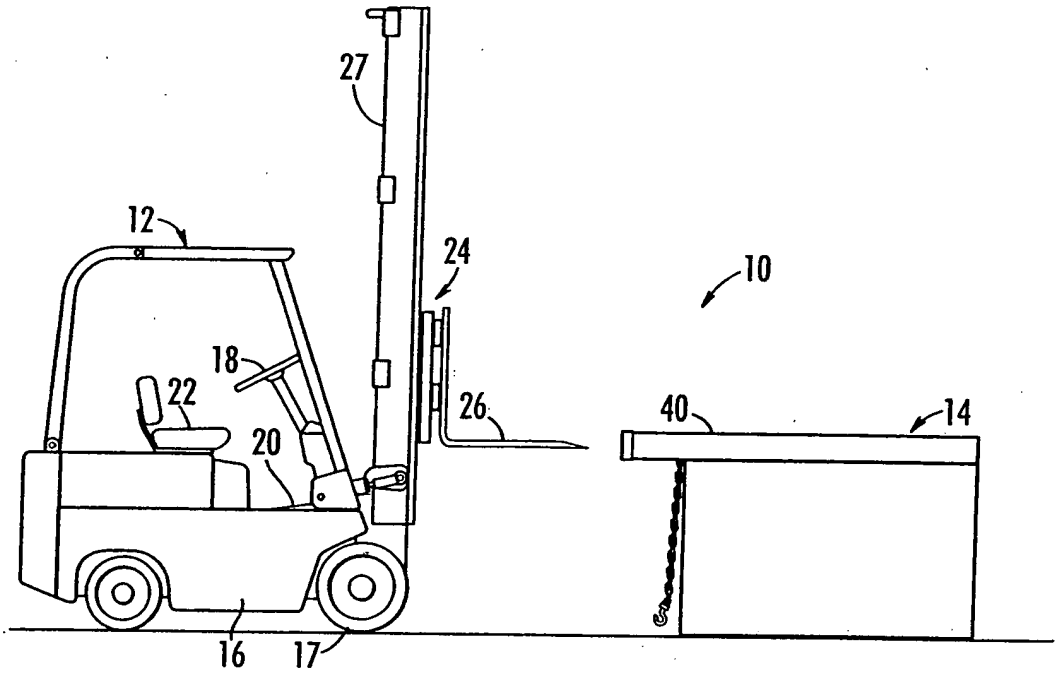

FIG. 1

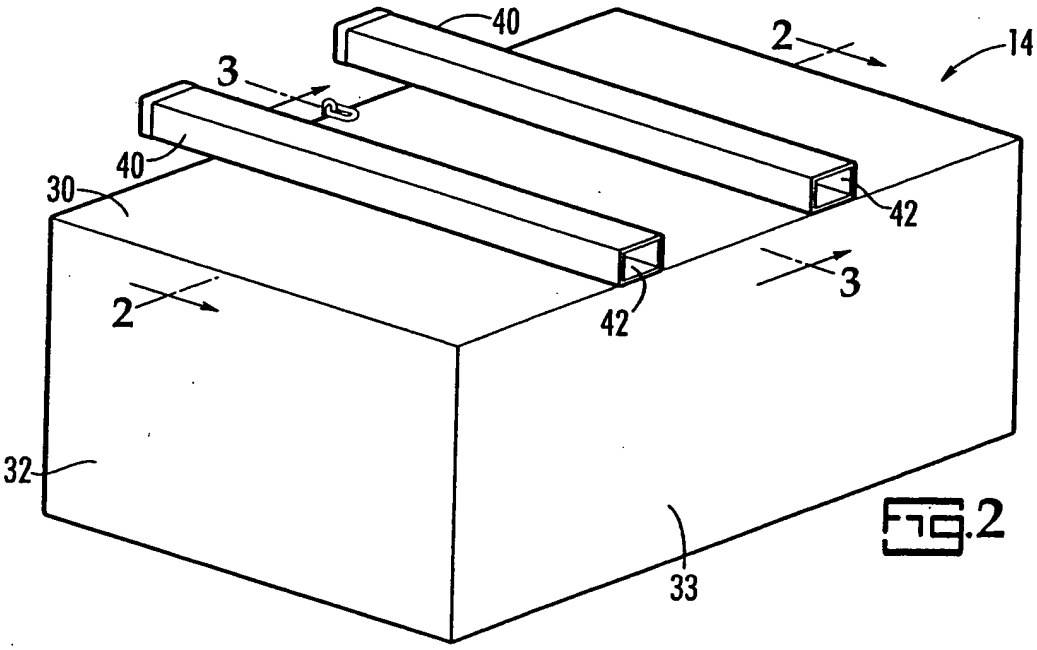

FIG. 2

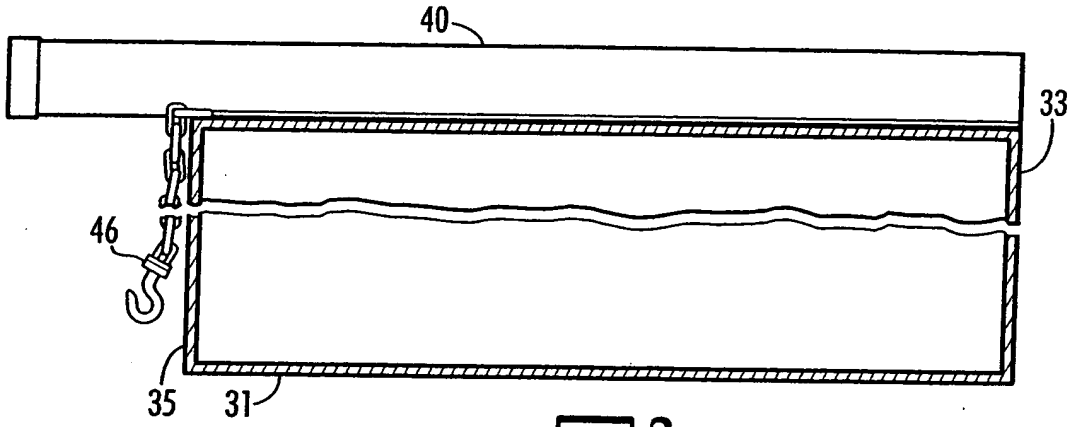

FIG.3

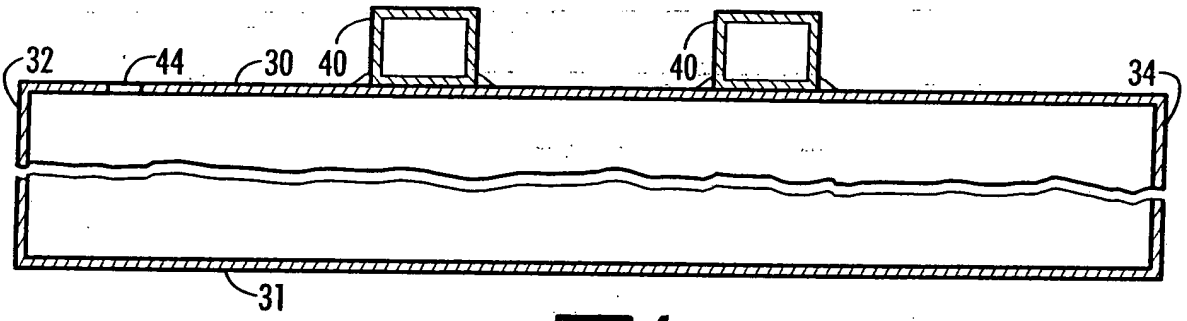

FIG.4A

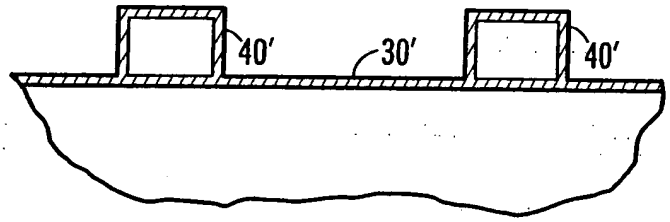

FIG.4B

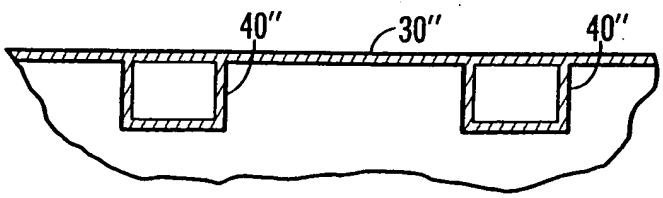

FIG.4C

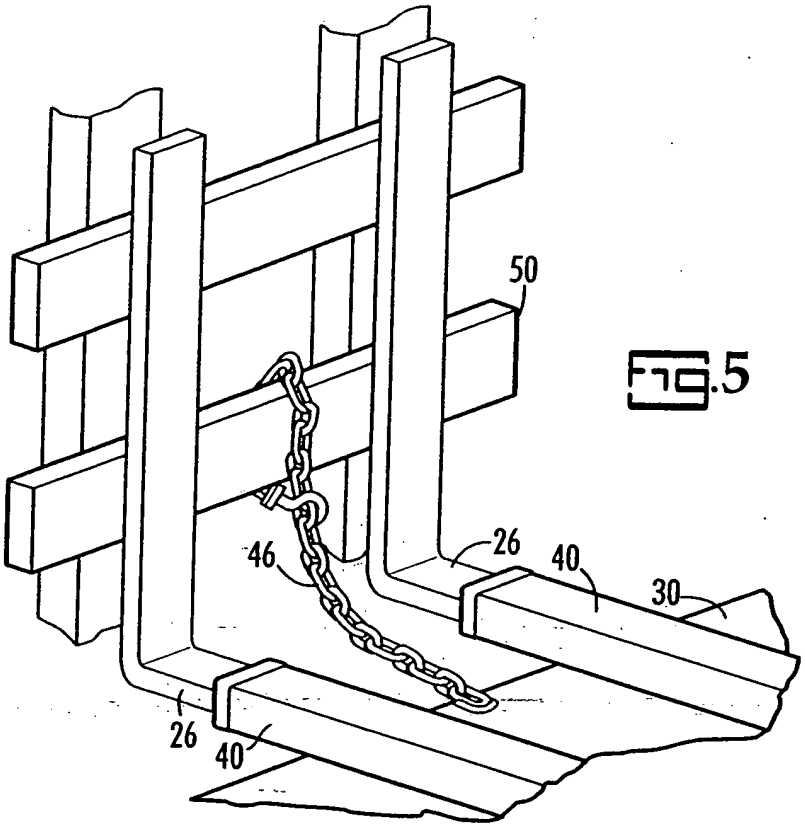

FIG.5

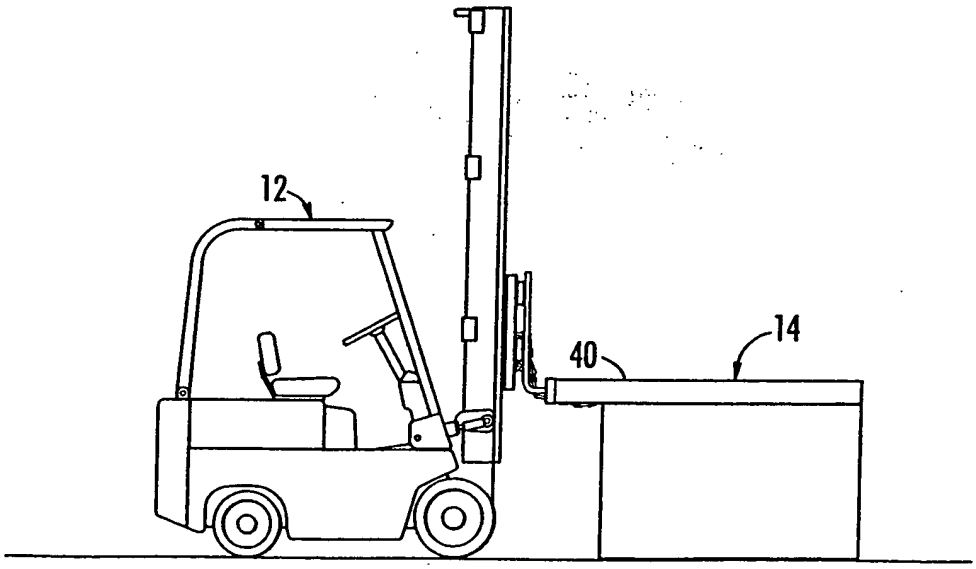

FIG.6A

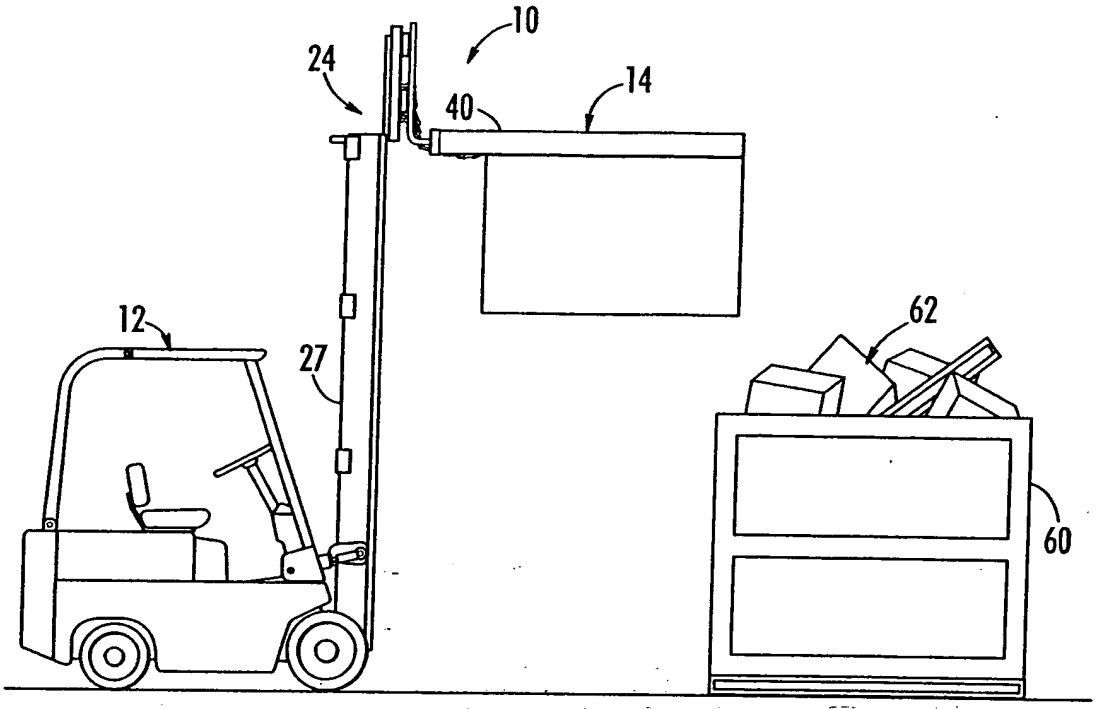

FIG.6B

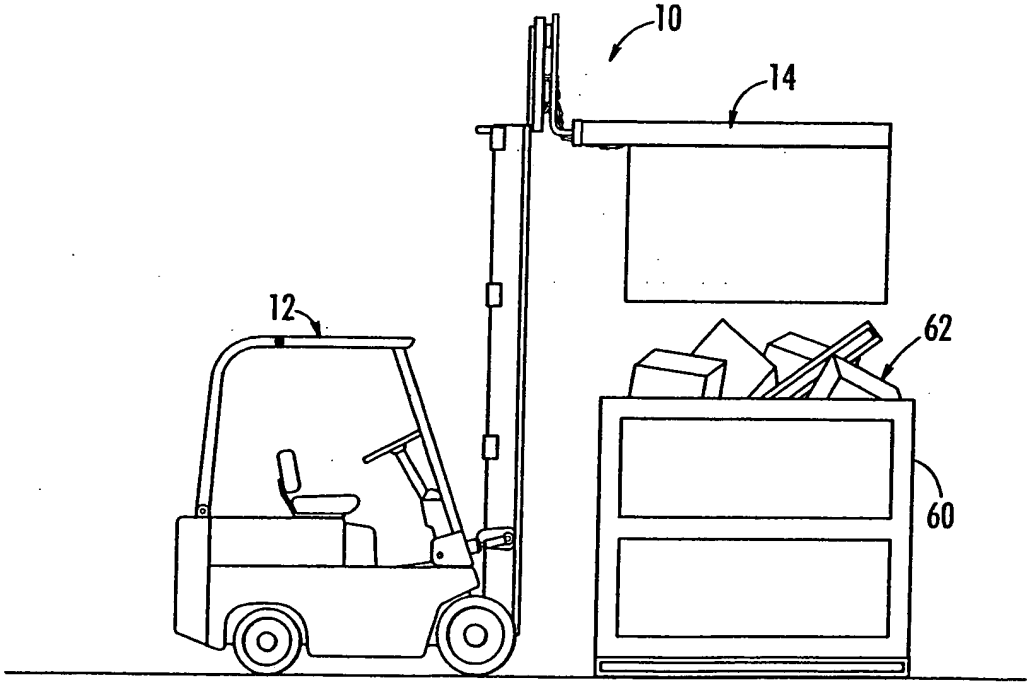

FIG.6C

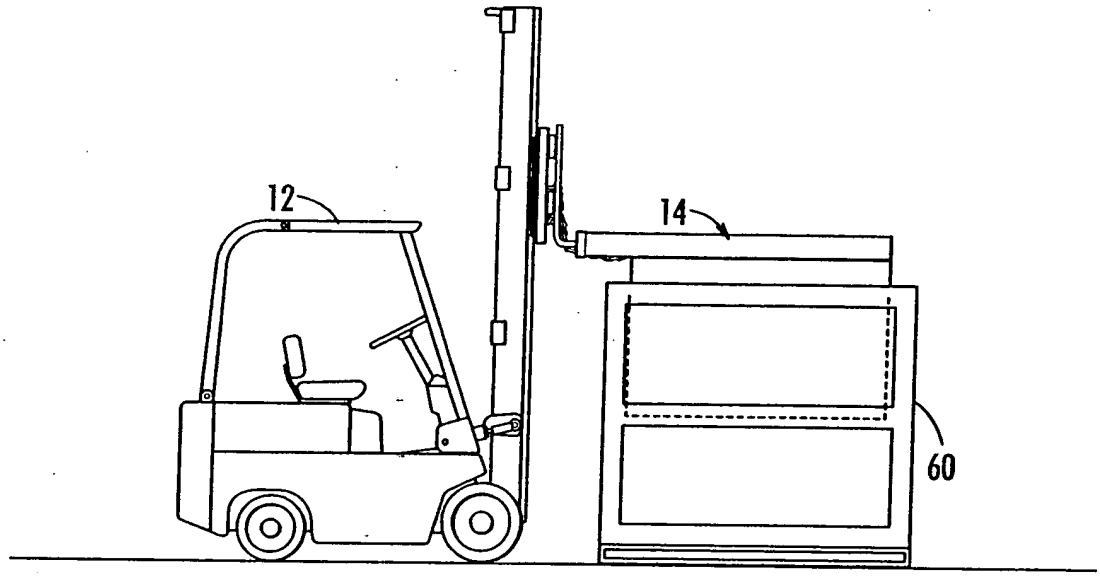

FIG.6D

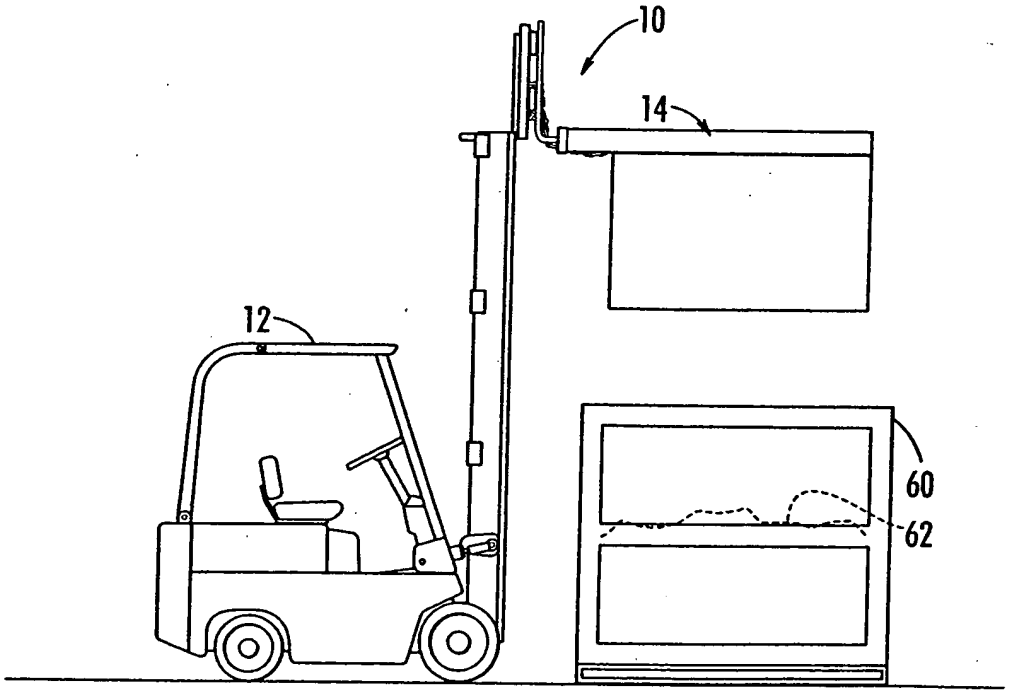

FIG.6E

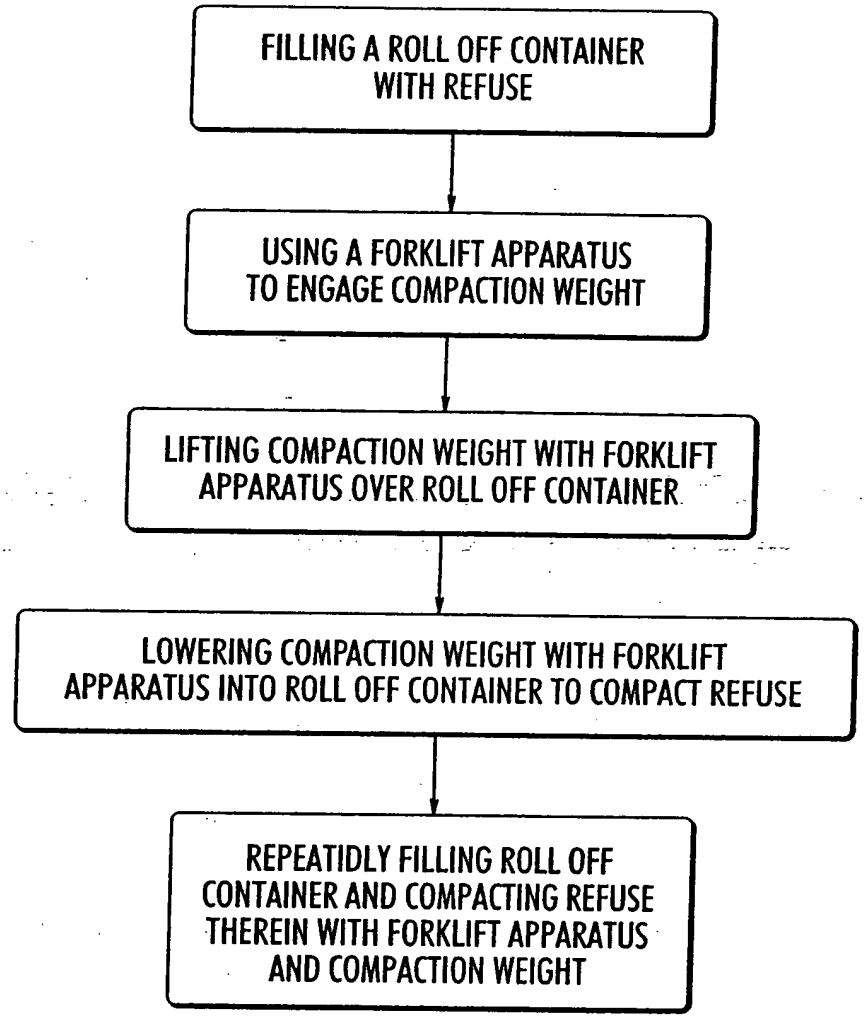
FILLING A ROLL OFF CONTAINER WITH REFUSE
USING A FORKLIFT APPARATUS TO ENGAGE COMPACTION WEIGHT
LIFTING COMPACTION WEIGHT WITH FORKLIFT APPARATUS OVER ROLL OFF CONTAINER
LOWERING COMPACTION WEIGHT WITH FORKLIFT APPARATUS INTO ROLL OFF CONTAINER TO COMPACT REFUSE
REPEATIDLY FILLING ROLL OFF CONTAINER AND COMPACTING REFUSE THEREIN WITH FORKLIFT APPARATUS AND COMPACTION WEIGHT

FIG.7

22141 U.S. PTO
10/816058
040104

PATENT APPLICATION FILING
IN THE UNITED STATES PATENT AND TRADEMARK OFFICE

Transmittal Letter; Patent Application Transmittal Letter; Utility Patent Application Transmittal; Power of Attorney; Formal Drawings; Certificate of Express Mailing; Postcard

In re : Brian Bagwell
Atty Docket : 32984-1
Atty: SARA A. CENTIONI
Title: Compacting Method and Apparatus

APR 1 2 2004

CERTIFICATE OF MAILING BY "EXPRESS MAIL" (37 CFR 1.10) Applicant(s): BAGWELL, JAMES BRIAN			Docket No. 32984-1
Serial No.	Filing Date HEREWITH	Examiner	Group Art Unit

Invention: COMPACTING METHOD AND APPARATUS

I hereby certify that the following correspondence:

PATENT APPLICATION AND RELATED DOCUMENTS

(Identify type of correspondence)

is being deposited with the United States Postal Service "Express Mail Post Office to Addressee" service under 37 CFR 1.10 in an envelope addressed to: Commissioner for Patents, P.O. Box 1450, Alexandria, VA 22313-1450 on

APRIL 1, 2004
(Date)

MARIE COBB
(Typed or Printed Name of Person Mailing Correspondence)

Marie Cobb
(Signature of Person Mailing Correspondence)

EV 331626075 US
("Express Mail" Mailing Label Number)

Note: Each paper must have its own certificate of mailing.

EV331626075US

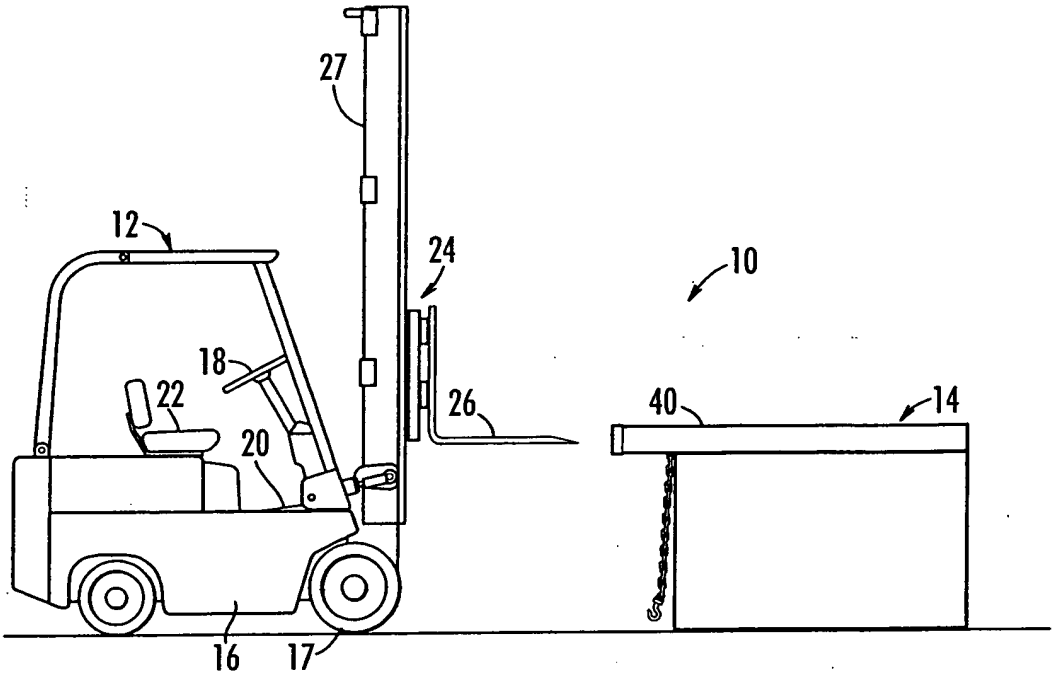

FIG.1

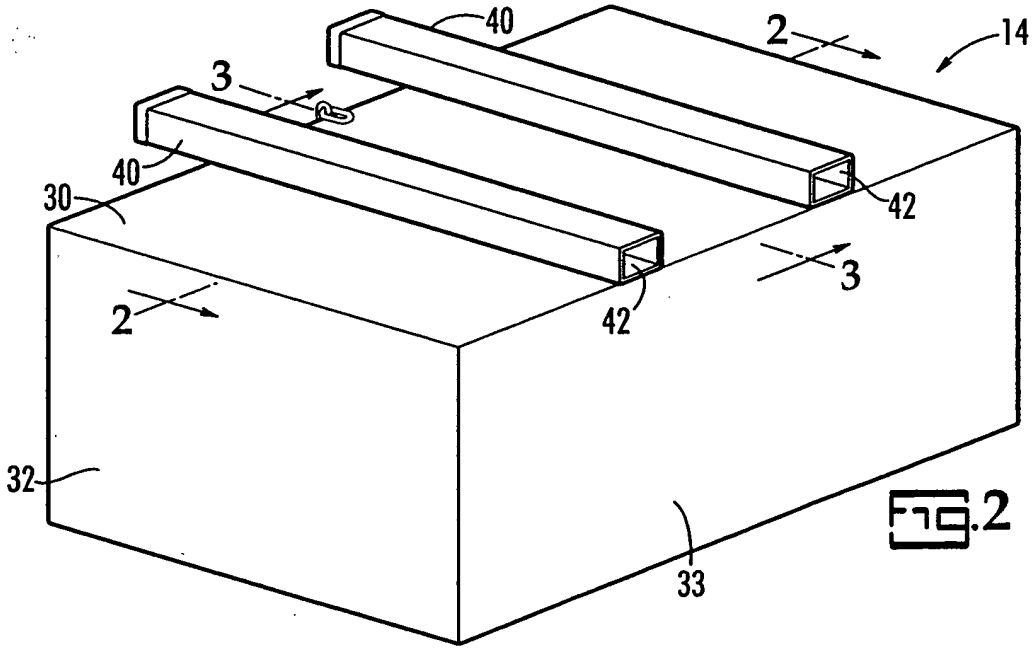

FIG.2

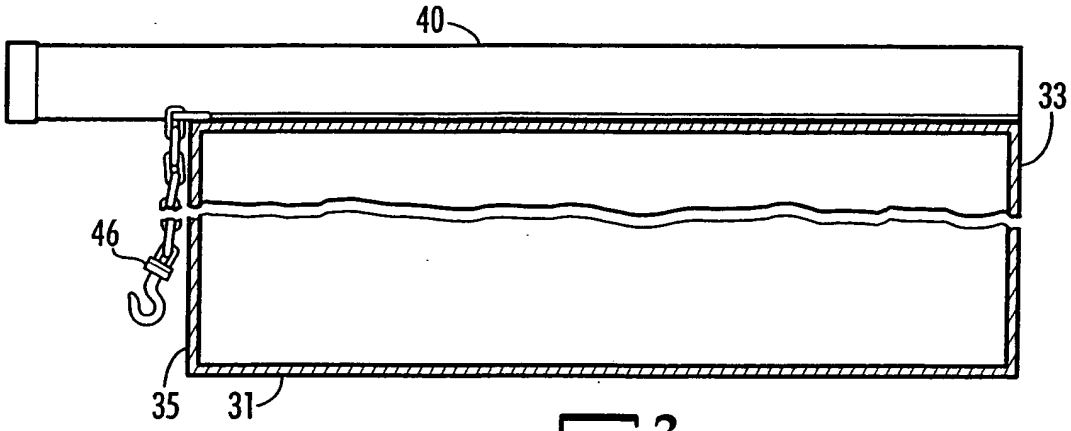

FIG.3

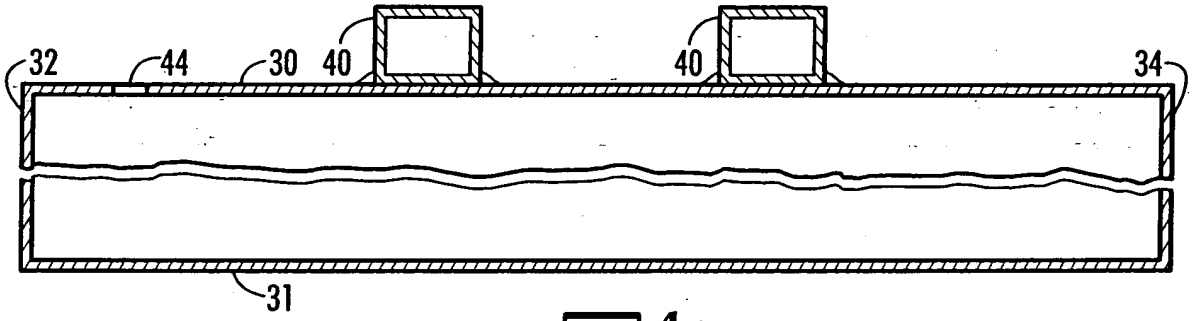

FIG.4A

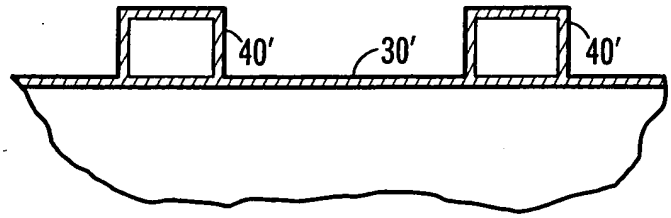

FIG.4B

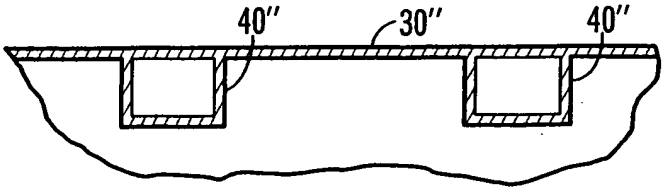

FIG.4C

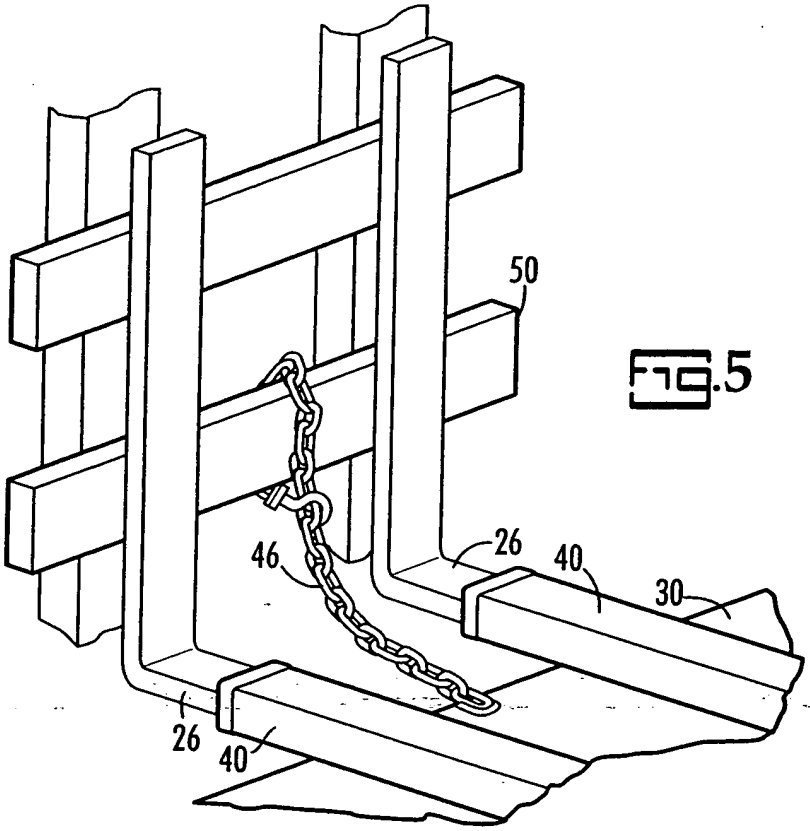

FIG.5

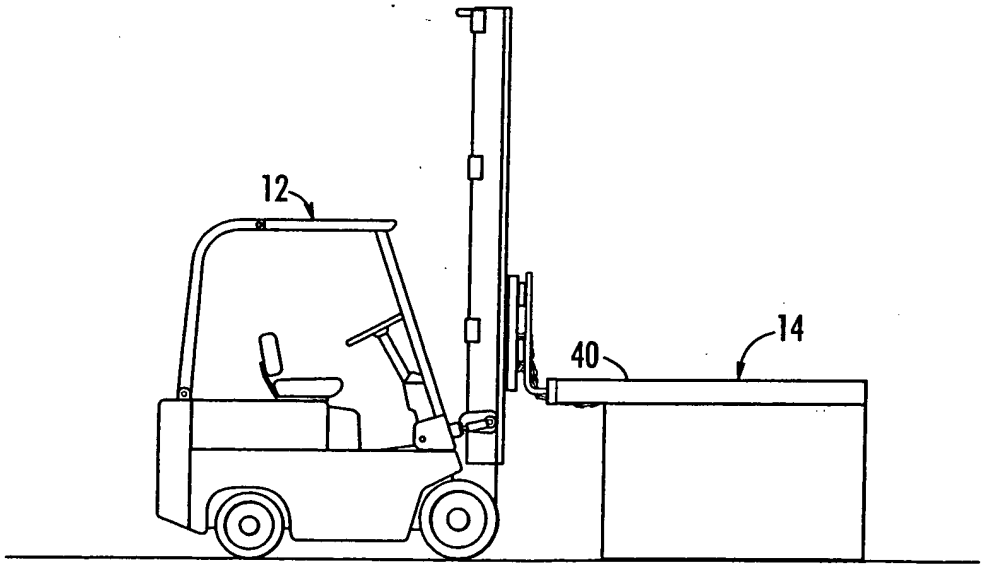

FIG.6A

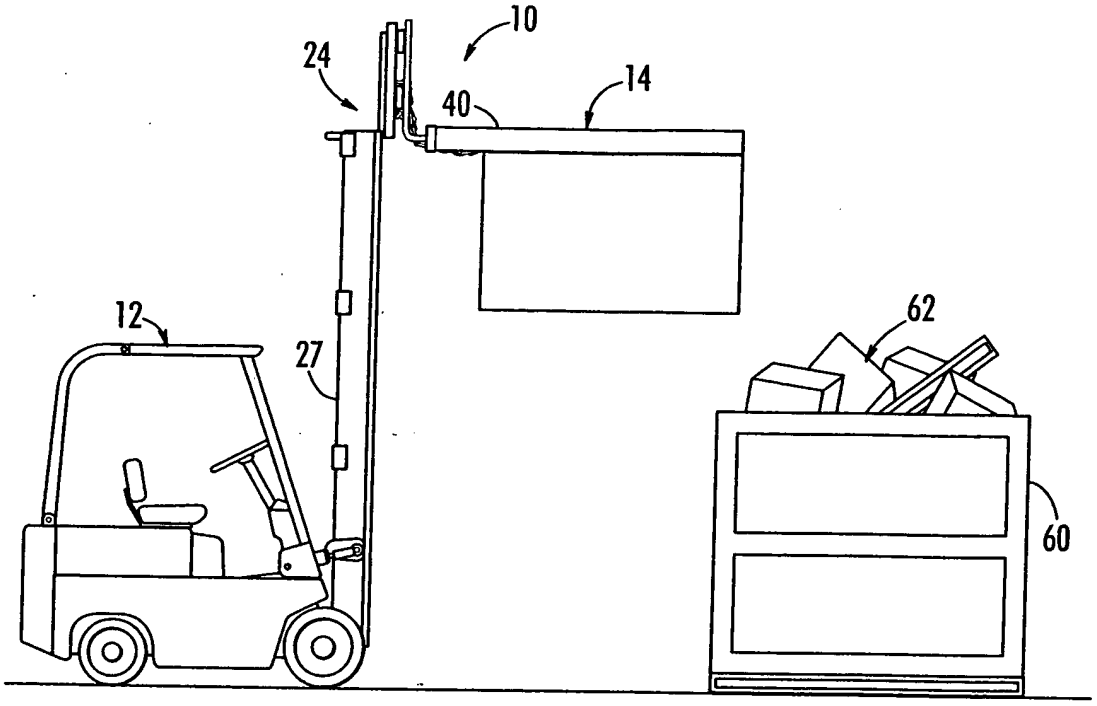

FIG. 6B

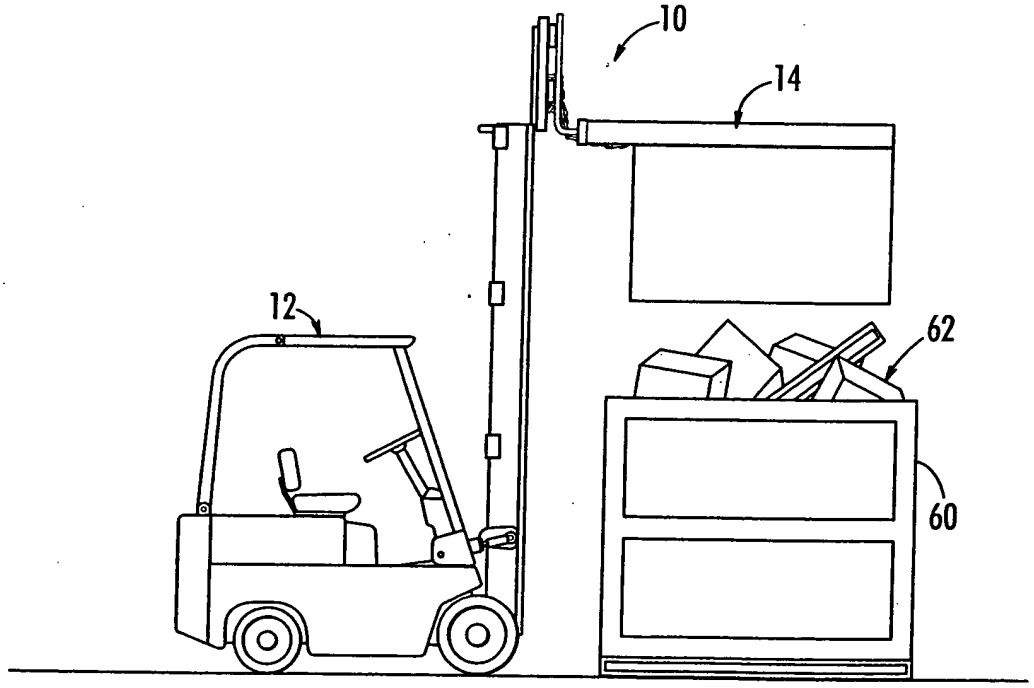

FIG. 6C

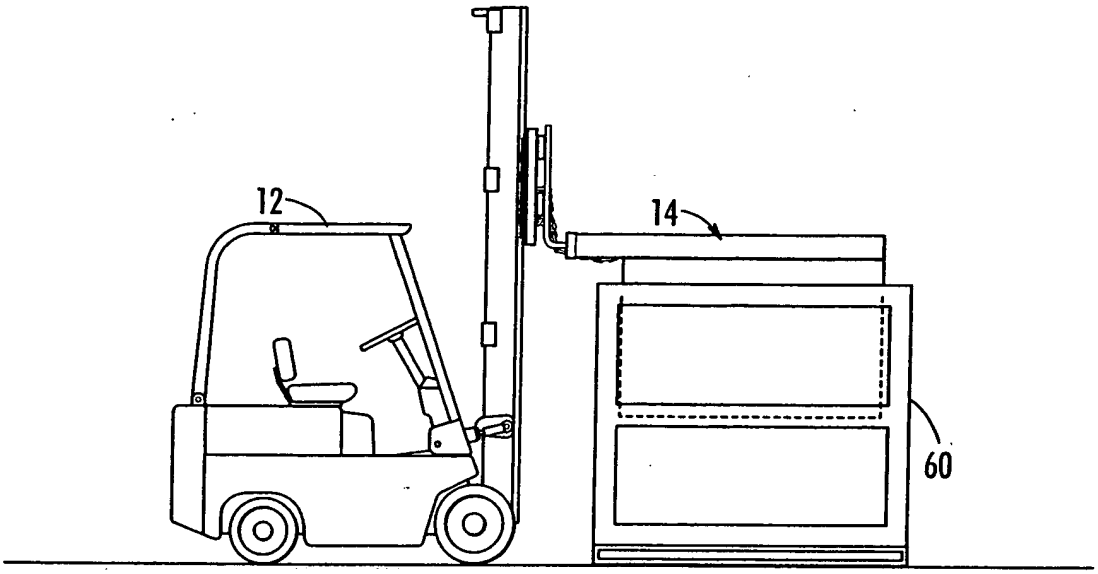

FIG.6D

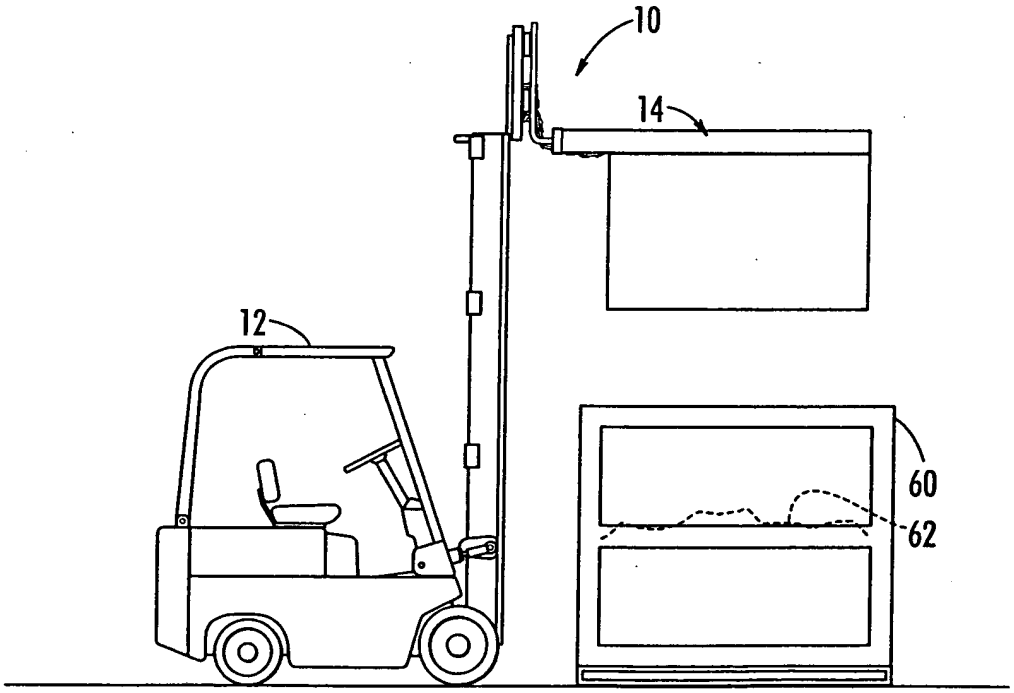

FIG.6E

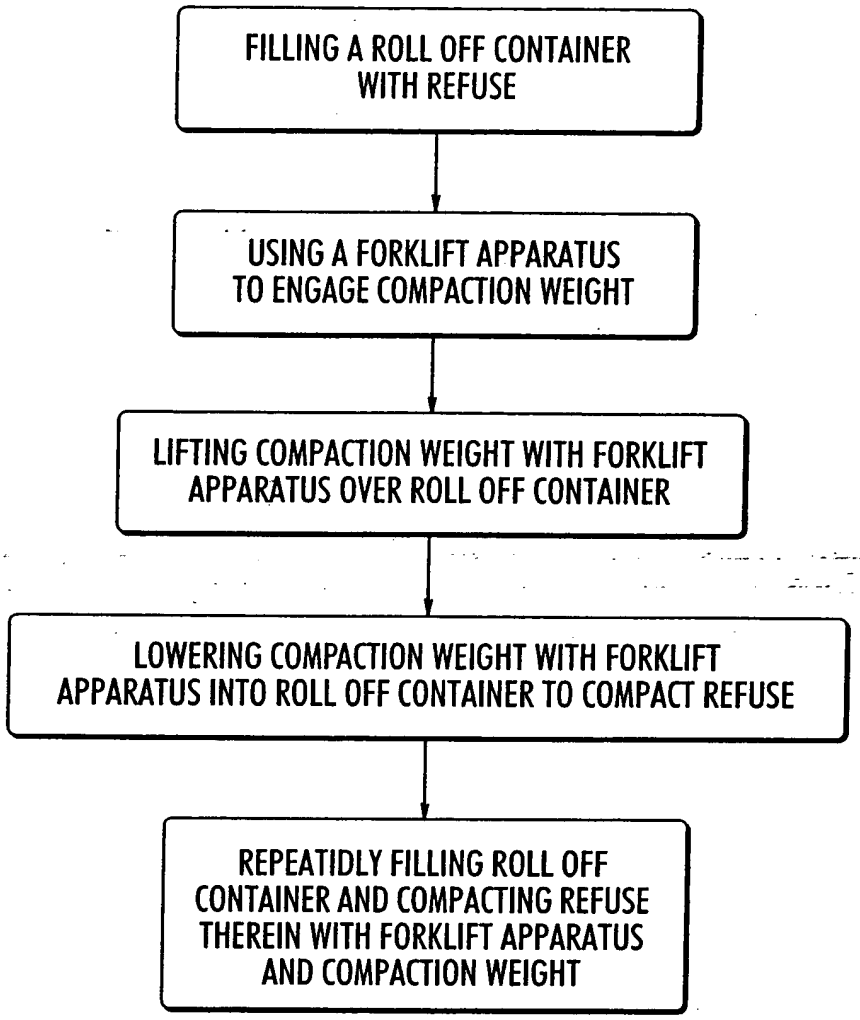
FILLING A ROLL OFF CONTAINER WITH REFUSE
USING A FORKLIFT APPARATUS TO ENGAGE COMPACTION WEIGHT
LIFTING COMPACTION WEIGHT WITH FORKLIFT APPARATUS OVER ROLL OFF CONTAINER
LOWERING COMPACTION WEIGHT WITH FORKLIFT APPARATUS INTO ROLL OFF CONTAINER TO COMPACT REFUSE
REPEATIDLY FILLING ROLL OFF CONTAINER AND COMPACTING REFUSE THEREIN WITH FORKLIFT APPARATUS AND COMPACTION WEIGHT

FIG.7

PATENT

IN THE UNITED STATES PATENT AND TRADEMARK OFFICE
Response to Notice to File Missing Parts of Application (3pgs); Notice Of Incomplete Nonprovisional Application; Petition; (1 page); Affidavit Of Sara A. Centioni (2 pages) ; Affidavit of A. Marie Cobb (35 pages); Formal drawings (6 pages)

In re :			
Atty Docket :	32984-01	Filing Date:	April 1, 2004
Serial No.:	10/816,058		
Patent No:		Issued:	
Group Art:			
Examining Atty:			
Atty:	SARA A. CENTIONI (803) 253-8282		
Title:	Compacting Method and Apparatus		

CERTIFICATE OF MAILING BY FIRST CLASS MAIL (37 CFR 1.8) Applicant(s): BAGWELL, BRIAN J.				Docket No. 32984-1	
Application No. 10/816,058	Filing Date 04/01/2004	Examiner		Customer No.	Group Art Unit 2636

OIPE
OCT 01 2004
PATENT & TRADEMARK OFFICE

Invention:

COMPACTING METHOD AND APPARATUS

I hereby certify that this **PRELIMINARY AMENDMENT WITH DRAWINGS AND EXHIBITS A-D**
(Identify type of correspondence)

is being deposited with the United States Postal Service as first class mail in an envelope addressed to:

Commissioner for Patents, P.O. Box 1450, Alexandria, VA 22313-1450 on **SEPTEMBER 28, 2004**
(Date)

A. MARIE COBB
(Typed or Printed Name of Person Mailing Correspondence)

Marie Cobb
(Signature of Person Mailing Correspondence)

Note: Each paper must have its own certificate of mailing.

CERTIFICATE OF MAILING BY FIRST CLASS MAIL (37 CFR 1.8) Applicant(s): BAGWELL, BRIAN J.				Docket No. 32984-1
Application No. 10/816,058	Filing Date 04/01/2004	Examiner	Customer No.	Group Art Unit 9636

Invention:

COMPACTING METHOD AND APPARATUS

I hereby certify that this **POST CARD**
(Identify type of correspondence)

is being deposited with the United States Postal Service as first class mail in an envelope addressed to:

Commissioner for Patents, P.O. Box 1450, Alexandria, VA 22313-1450 on **SEPTEMBER 28, 2004**
(Date)

A. MARIE COBB
(Typed or Printed Name of Person Mailing Correspondence)

Marie Cobb
(Signature of Person Mailing Correspondence)

Note: Each paper must have its own certificate of mailing.

This Page is Inserted by IFW Indexing and Scanning Operations and is not part of the Official Record

BEST AVAILABLE IMAGES

Defective images within this document are accurate representations of the original documents submitted by the applicant.

Defects in the images include but are not limited to the items checked:

- ☐ BLACK BORDERS
- ☐ IMAGE CUT OFF AT TOP, BOTTOM OR SIDES
- ☐ FADED TEXT OR DRAWING
- ☐ BLURRED OR ILLEGIBLE TEXT OR DRAWING
- ☐ SKEWED/SLANTED IMAGES
- ☐ COLOR OR BLACK AND WHITE PHOTOGRAPHS
- ☐ GRAY SCALE DOCUMENTS
- ☑ LINES OR MARKS ON ORIGINAL DOCUMENT
- ☐ REFERENCE(S) OR EXHIBIT(S) SUBMITTED ARE POOR QUALITY
- ☐ OTHER: _____

IMAGES ARE BEST AVAILABLE COPY.
As rescanning these documents will not correct the image problems checked, please do not report these problems to the IFW Image Problem Mailbox.

UNITED STATES PATENT AND TRADEMARK OFFICE

COMMISSIONER FOR PATENTS
UNITED STATES PATENT AND TRADEMARK OFFICE
P.O. BOX 1450
ALEXANDRIA, VA 22313-1450
www.uspto.gov

MAILED

AUG 1 0 2004

DIRECTOR'S OFFICE
TECHNOLOGY CENTER 3600

IAN F. BURNS & ASSOCIATES
1575 DELUCCHI LANE, SUITE 222
RENO, NV 89502

In re application of
Owen Ralph Baser
Application No. 10/816,061
Filed: March 31, 2004
For: DOOR HANDLE ASSEMBLY

DECISION ON PETITION TO MAKE SPECIAL (APPLICANT'S AGE)

This is a decision on the petition submitted on March 31, 2004 under 37 CFR 1.102 (c) to make the above-identified application special under the accelerated examination procedure set forth in MPEP 708.02, Section IV: Applicant's Age.

The petition is **GRANTED**.

An application may be accorded special status upon the filing of a petition providing evidence showing that the applicant is at least 65 years old. Such a showing may be provided by evidence such as a birth certificate or a statement from the applicant.

The evidence submitted with the petition is a affidavit signed by Owen Ralph Baser indicating that he is at least 65 years of age.

The examiner is directed (1) to make an interference search for possible interfering applications, (2) to promptly examine this application out of turn, and (3) if any interfering application is discovered, to examine such application simultaneously and state in the first official letter of such application that it is being taken out of turn because of a possible interference.

Petitioner is advised that this application will continue to be special, throughout its entire prosecution and pendency, including interference or appeal, if any, only if petitioner makes a prompt ***bona fide*** effort, in response to each Office action, to place the application in condition for allowance, even if it is necessary to conduct an interview with the examiner to accomplish this purpose.

SUMMARY: Petition to Make Special **GRANTED**.

Steven N. Meyers
Special Programs Examiner
Technology Center 3600
(703) 308-3868

SNM/dcg: 8/6/04

UNITED STATES PATENT AND TRADEMARK OFFICE

Commissioner for Patents
United States Patent and Trademark Office
P.O. Box 1450
Alexandria, VA 22313-1450
www.uspto.gov

KIM L. DESCH
14994 HUNTINGTON GATE DR.
POWAY, CA 92064

COPY MAILED

JUN 22 2006

OFFICE OF PETITIONS

In re Application of :
Kim L. Desch :
Application No. 10/816,074 :
Filed: April 1, 2004 :
Attorney Docket No. N/A :

ON PETITION

This is a decision on the petition under 37 CFR 1.137(a), filed May 23, 2006, to revive the above-identified application.

The petition is **GRANTED**.

This application became abandoned for failure to timely file a proper reply to the non-final Office action mailed May 18, 2005, which set a one (1) month period for response. Accordingly, this application became abandoned on June 19, 2005. A Notice of Abandonment was mailed on April 3, 2006.

Petitioner asserts that a response to the May 18, 2005 Office action was submitted by facsimile on June 16, 2005. In support, petitioner has submitted a copy of the originally filed response. The response includes an executed Certificate of Facsimile Transmission under 37 CFR 1.8 dated June 16, 2005. Additionally, petitioner has submitted a copy of the "FAX TX REPORT" that confirms transmission and receipt of the documents on June 16, 2005.

Accordingly, the petition is granted.

This application is being forwarded to Technology Center 3600, for review of the "Response To Restriction Requirement / Election of Species", filed May 23, 2006 (originally filed June 16, 2005).

Telephone inquiries concerning this matter may be directed to the undersigned at (571) 272-3228.

Edward J. Tannouse
Petitions Attorney
Office of Petitions
Office of the Deputy Commissioner
for Patent Examination Policy

UNITED STATES PATENT AND TRADEMARK OFFICE

COMMISSIONER FOR PATENTS
UNITED STATES PATENT AND TRADEMARK OFFICE
P.O. BOX 1450
ALEXANDRIA, VA 22313-1450
www.uspto.gov

Richard F. Lemuth
Shell Oil Company
Intellectual Property Services
P. O. Box 2463
Houston, TX 77252-2463

COPY MAILED

AUG 0 5 2005

OFFICE OF PETITIONS

In re Application of :
Marek Matsuz, et al. :
Application No. 10/816,080 : ON PETITION
Filed: April 1, 2004 :
Attorney Docket No. TH-0996 (US) :

This is a decision on the petition under filed December 22, 2004, which is being treated as a petition under 37 CFR § 1.78(a)(6), to accept an unintentionally delayed claim under 35 U.S.C. § 119(e) for the benefit of the prior-filed provisional application set forth in the concurrently filed amendment.

The petition is **DISMISSED AS MOOT**.

A petition under 37 CFR § 1.78(a)(6) is only applicable to those applications filed on or after November 29, 2000.

Along with the instant petition under 37 CFR § 1.76(a)(6), petitioner has submitted an amendment to the first sentence of the specification following the title to include a reference to the prior-filed application.

The instant pending nonprovisional application was filed on April 1, 2004, and was pending at the time of filing of the instant petition. While a reference to the prior-filed application was not included in an ADS or in the first sentence of the specification following the title, reference nevertheless was made in the transmittal letter filed with the above-identified application.

The current procedure where a claim for priority under 37 CFR § 1.78(a)(6) is not included in the first sentence of the specification or in an ADS but does appear either in the oath or declaration or a transmittal letter filed with the application and the Office notes the claim for priority, no petition will be required to accept a late claim for priority. This is because the application would have been scheduled for publication on the basis of the information

concerning the claim submitted elsewhere in the application within the time period set forth in 37 CFR § 1.78(a)(5)(ii). However, on the other hand, if the USPTO does not note the claim for priority to the prior-filed application(s) set forth in the oath or declaration or transmittal letter submitted with the application, a petition will be required to accept a late claim for priority under 37 CFR § 1.78(a)(6).[1] In the instant case, the Office noted the claim for priority of the prior-filed application in the transmittal letter filed with the application, as shown by its inclusion on the filing receipt.

In view of the above, the $1370 petition fee submitted is unnecessary and will be refunded to petitioner's deposit account in due course.

Any questions concerning this decision on petition may be directed to Marianne Jenkins at (571) 272-3223. All other inquiries concerning either the examination procedures or status of the application should be directed to the Technology Center.

This application is being forwarded to the Examiner of Technology Center AU 1625 for appropriate action on the amendment filed December 22, 2004, including consideration of the claim under 35 U.S.C. § 119(e) and 37 CFR 1.78(a)(5) for benefit of the prior-filed provisional application.

Frances Hicks

Frances M. Hicks
Lead Petitions Examiner
Office of Petitions

[1] *Note* MPEP 201.11 (V), page 200-75 (Rev. 1. Feb. 2004 and 66 Federal Register 67087 at 67089 (Dec. 28, 2001), effective December 28, 2001.

3 0 JUN 2008

UNITED STATES PATENT AND TRADEMARK OFFICE

Commissioner for Patents
United States Patent and Trademark Office
P.O. Box 1450
Alexandria, VA 22313-1450
www.uspto.gov

BAKER, DONELSON, BEARMAN, CALDWELL & BERKOWITZ
SIX CONCOURSE PARKWAY
SUITE 3100
ATLANTA GA 30328

In re Application of	:	
BULLA, Romeo et al.	:	
Application No.: 11/816,080	:	
PCT No.: PCT/BR2006/000019	:	
Int. Filing Date: 09 February 2006	:	DECISION
Priority Date: 15 February 2005	:	
Docket No.: 2901927-000003	:	
For: ACID HYDROLYSIS PROCESS ... AND	:	
HYDROLYSIS REACTOR	:	

This decision is in response to applicant's submission of a statement under 37 CFR 1.69 on 01 May 2008.

BACKGROUND

On 14 February 2008, the Office mailed Decision On Petition, but indicating that either a statement that the English translation is an accurate translation of the foreign language text under 37 CFR 1.69 or a new declaration was required.

On 01 May 2008, applicants supplied provided the statement under 37 CFR 1.69.

DISCUSSION

Applicants have supplied a statement that the English text is an accurate translation of the foreign language text.

CONCLUSION

This application is being forwarded to the National Stage Processing Branch of the Office of PCT Operations for continued processing in accordance with this decision. The application has a 35 USC 371(c)(1), (c)(2) and (c)(4) date of 12 December 2007.

/Erin P. Thomson/

Erin P. Thomson
Attorney Advisor
PCT Legal Administration

Telephone: 571-272-3292
Facsimile: 571-273-0459

UNITED STATES PATENT AND TRADEMARK OFFICE

COMMISSIONER FOR PATENTS
UNITED STATES PATENT AND TRADEMARK OFFICE
P.O. BOX 1450
ALEXANDRIA, VA 22313-1450
www.uspto.gov

Paper No.

WOLF GREENFIELD & SACKS, PC
FEDERAL RESERVE PLAZA
600 ATLANTIC AVENUE
BOSTON, MA 02210-2211

COPY MAILED
AUG 2 6 2004
OFFICE OF PETITIONS

In re Application of :
Guitton et al. :
Application No. 10/816,085 :
Filed: April 1, 2004 :
For: INTEGRATED BI-BAND :
INDUCTANCE AND APPLICATIONS :

ON PETITION

In re Application of :
:
Application No. 10/816,214 :
Filed: April 1, 2004 :
For: HETEROATOMIC SINGLE-CRYSTAL :
LAYERS :

This is a decision on the Petition Regarding Omitted Items, filed July 22, 2004, which is being treated as a petition to correct the file in application serial number 10/816,085.

The petition is **granted**.

The application was filed on April 1, 2004. On July 2, 2004, the Office of Initial Patent Examination mailed a Notice of Omitted Item(s) in a Nonprovisional Application, noting that a filing date had NOT been accorded the application because the application had been deposited without drawings.

In response to the Notice, Applicants files the instant petition and requests that the drawings filed in Application No. 10/816,214 on April 1, 2004, be transferred to the file of Application No. 10/816,085, and that the drawings filed in Application No. 10/816,085 on April 1, 2004, be transferred to the file of Application No. 10/816,214, and that the applications be accorded filing dates of April 1, 2004, with the drawings as part of the original disclosures.

Applicants' attorney, James H. Morris, explained that through a clerical error, drawing Figures 6-8 in application no. 10/816,085 were not omitted, but inadvertently filed in application 10/816,214, along with the other drawing Figures for application no. 10/816,085. Both applications were filed simultaneously.

The Office notes that the specification for Application No. 10/816,085 references Figures 1-8, while drawing Figures 1, 2, 3A, 3B, 4A, 4B, 4C, 4D, 5A, 5B and 5C were filed therewith. Conversely, the specification for Application No. 10/816,214 references Figures 1, 2, 3A, 3B, 4A, 4B, 4C, 4D, 5A, 5B and 5C, while drawing Figures 1-8 were filed therewith.

It is obvious that neither application was individually complete on the date of deposit, *i.e.*, on April 1, 2004, since the drawings described in the specifications were not received with the respective specifications. Additionally, it is noted that the application transmittal sheets further confuse the matter in that application no. 10/816,214 references the filing of three (3) sheets of drawings and 8 drawing Figures, and the application transmittal sheet for Application No. 10/816,085 references the filing of two (2) sheets of drawings with Figures 1-5C. However, in light of the contents of the brief descriptions of the drawings contained in the specifications of the respective applications, the evidence is persuasive that the drawings were misfiled.

Further, since the drawings were in fact present in the USPTO on April 1, 2004, the applications may be accorded filing dates of April 1, 2004, on petition under 37 CFR 1.182.

The three (3) sheets of drawings filed on April 1, 2004, in Application No. 10/816,214 will be removed and transferred to Application No. 10/816,085.

The two (2) sheets of drawings filed on April 1, 2004, in Application No. 10/816,085 will be removed and transferred to Application No. 10/816,214.

Application No. 10/816,085 will be reprocessed with the three (3) sheets of transferred drawings, containing Figures 1-8, filed on April 1, 2004.

Application No. 10/816,214 will be reprocessed with the two (2) sheets of transferred drawings, containing Figures 1, 2, 3A, 3B, 4A, 4B, 4C, 4D, 5A, 5B and 5C, filed on April 1, 2004.

The petition is **granted** to the extent indicated above.

As this petition was necessitated by Applicant's filing error, the petition fee will not be refunded.

A message regarding Application No. 10/816,085 is being forwarded to the Office of Initial Patent Examination to reprocess the application with a filing date of April 1, 2004, using the three (3) sheets of drawings containing Figures 1-8, filed in application no. 10/816,214 on April 1, 2004.

A message regarding Application No. 10/816,214 is being forwarded to the Office of Initial Patent Examination to reprocess the application with a filing date of April 1, 2004, using the two (2) sheets of drawings containing Figures 1, 2, 3A, 3B, 4A, 4B, 4C, 4D, 5A, 5B and 5C, filed in application no. 10/816,085 on April 1, 2004.

Telephone inquiries concerning this matter should be directed to the undersigned at (703) 305-0014.

Derek L. Woods
Petitions Attorney
Office of Petitions

UNITED STATES PATENT AND TRADEMARK OFFICE

COMMISSIONER FOR PATENTS
UNITED STATES PATENT AND TRADEMARK OFFICE
P.O. BOX 1450
ALEXANDRIA, VA 22313-1450
www.uspto.gov

JORDAN AND HAMBURG LLP
122 EAST 42ND STREET
SUITE 4000
NEW YORK, NY 10168

COPY MAILED

FEB 0 3 2006

OFFICE OF PETITIONS

In re Application of
Shigeki Nagase
Application No. 10/816,090
Filed: April 1, 2004
Attorney Docket No.: F-8201

ON PETITION

This is a decision on the petition, filed January 30, 2006, under 37 CFR 1.313(c)(2) to withdraw the above-identified application from issue after payment of the issue fee.

The petition is **GRANTED**.

The above-identified application is withdrawn from issue for consideration of a submission under 37 CFR 1.114 (request for continued examination). See 37 CFR 1.313(c)(2).

Petitioner is advised that the issue fee paid on November 21, 2005, in the above-identified application cannot be refunded. If, however, the above-identified application is again allowed, petitioner may request that it be applied towards the issue fee required by the new Notice of Allowance. [1]

Telephone inquiries relating to this decision should be directed to the undersigned at (571) 272-3204.

The application is being referred to Technology Center AU 2855 for further processing of the request for continued examination under 37 CFR 1.114.

Sherry D. Brinkley
Petitions Examiner
Office of Petitions

[1]The request to apply the issue fee to the new Notice may be satisfied by completing and returning the new Issue Fee Transmittal Form PTOL-85(b), which includes the following language thereon: "Commissioner for Patents is requested to apply the Issue Fee and Publication Fee (if any) or re-apply any previously paid issue fee to the application identified above." Petitioner is advised that, whether a fee is indicated as being due or not, the Issue Fee Transmittal Form **must** be completed and timely submitted to avoid abandonment. Note the language in bold text on the first page of the Notice of Allowance and Fee(s) Due (PTOL-85).

UNITED STATES PATENT AND TRADEMARK OFFICE

Commissioner for Patents
United States Patent and Trademark Office
P.O. Box 1450
Alexandria, VA 22313-1450
www.uspto.gov

HAYES, SOLOWAY P.C.
175 CANAL STREET
MANCHESTER, NH 03101

COPY MAILED
DEC 0 4 2006
OFFICE OF PETITIONS

In re Application of	:	
JACKSON	:	
Application No. 10/816,097	:	DECISION ON PETITION
Filed: April 01, 2004	:	TO WITHDRAW
Attorney Docket No. Jackson.1002	:	FROM RECORD
	:	

This is a decision on the Request to Withdraw as attorney or agent of record under 37 C.F.R. § 1.36(b), filed September 01, 2006.

The request is **NOT APPROVED**.

A grantable request to withdraw as attorney/agent of record must be signed by every attorney/agent seeking to withdraw or contain a clear indication that one attorney is signing on behalf of another/others. A request to withdraw will not be approved unless at least 30 (thirty) days would remain between the date of approval and the later of the expiration date of a time to file a response or the expiration date of the maximum time period which can be extended under 37 C.F.R. § 1.136(a).

The Office cannot approve the request at this time since the reasons provided do not meet any of the conditions under the mandatory or permissive categories enumerated in 37 CFR 10.40. Section 10.40 of Title 37 of the Code of Federal Regulation states, "[a] practitioner shall not withdraw from employment in a proceeding before the Office without permission from the Office[.]" More specifically, 37 CFR 10.40 states, "[i]f paragraph (b) of this section is not applicable, a practitioner may not request permission to withdraw in matter pending before the Office unless such request or such withdrawal is" for one the permissive reasons listed in 37 CFR 10.40(c). The reasons set forth in the request, "This application was withdrawn from this firm" does not meet any conditions set forth in 37 CFR 1040.

All future communications from the Office will continue to be directed to the above-listed address until otherwise properly notified by the applicant.

A Review of the file discloses that a final Office action was mailed on October 31, 2006, which set forth a three month shortened statutory period for reply. Extensions of time under 37 CFR 1.136(a) are available. To date, there is no indication that a reply to the Office action of October 31, 2006 has been received.

Telephone inquiries concerning this decision should be directed to the undersigned at 571-272-6825.

Patricia Volpe
Petitions Examiner
Office of Petitions

cc: **Jeffrey Jackson**
PO Box 97
Tybee Island, GA 31328

UNITED STATES PATENT AND TRADEMARK OFFICE

Commissioner for Patents
United States Patent and Trademark Office
P.O. Box 1450
Alexandria, VA 22313-1450
www.uspto.gov

COPY MAILED

JUL 05 2007

OFFICE OF PETITIONS

HAYES SOLOWAY P.C.
175 CANAL STREET
MANCHESTER, NH 03101

In re Application of	:	
Jeffrey Jackson	:	
Application No. 10/816,097	:	DECISION ON PETITION
Filed: April 1, 2004	:	TO WITHDRAW
Attorney Docket No. Jackson.1002	:	FROM RECORD
	:	

This is a decision on the Request to Withdraw as attorney or agent of record under 37 C.F.R. § 1.36(b), filed December 7, 2006.

The request is **NOT APPROVED** as moot.

A review of the file record indicates that the power of attorney to Hayes Soloway P.C. has been revoked by the applicant of the patent application on January 31, 2007. Accordingly, the request to withdraw under 37 C.F.R. § 1.36(b) is moot.

All future communications from the Office will continue to be directed to the below-listed address until otherwise notified by applicant.

Telephone inquires concerning this decision should be directed to Terri Williams at 571-272-2991.

Terri Williams

Terri Williams
Petitions Examiner
Office of Petitions

cc: **SHEEHAN PHINNEY BASS & GREEN, PA**
c/o PETER NIEVES
1000 ELM STREET
MANCHESTER NH 03105-3701

PTO/SB/66 (03-09)
Approved for use through 03/31/2012. OMB 0651-0016
U.S. Patent and Trademark Office: U.S. DEPARTMENT OF COMMERCE
Under the Paperwork Reduction Act of 1995, no persons are required to respond to a collection of information unless it displays valid OMB control number.

PETITION TO ACCEPT UNINTENTIONALLY DELAYED PAYMENT OF MAINTENANCE FEE IN AN EXPIRED PATENT (37 CFR 1.378(c))

Patent Number	Issue Date (YYYY-MM-DD)	Application Number	Filing Date (YYYY-MM-DD)	Docket Number (if applicable)
6932041	2005-08-23	10/816,098	2004-04-01	4511.0001US01

CAUTION: Maintenance fee (and surcharge, if any) payment must correctly identify: (1) the patent number and (2) the application number of the actual U.S. application leading to issuance of that patent to ensure the fee(s) is/are associated with the correct patent. 37 CFR 1.366(c) and (d).

SMALL ENTITY
☒ Patentee claims, or has previously claimed, small entity status. See 37 CFR 1.27.

LOSS OF ENTITLEMENT TO SMALL ENTITY STATUS
☐ Patentee is no longer entitled to small entity status. See 37 CFR 1.27(g)

NOT Small Entity		Small Entity	
Fee	Code	Fee	Code
○ 3 ½ year	(1551)	◉ 3 ½ year	(2551)
○ 7 ½ year	(1552)	○ 7 ½ year	(2552)
○ 11 ½ year	(1553)	○ 11 ½ year	(2553)

SURCHARGE
The surcharge required by 37 CFR 1.20(i)(2) (Fee Code 1558) must be paid as a condition of accepting unintentionally delayed payment of the maintenance fee.

MAINTENANCE FEE (37 CFR 1.20(e)-(g))
The appropriate maintenance fee must be submitted with this petition.

STATEMENT
THE UNDERSIGNED CERTIFIES THAT THE DELAY IN PAYMENT OF THE MAINTENANCE FEE TO THIS PATENT WAS UNINTENTIONAL

PETITIONER(S) REQUEST THAT THE DELAYED PAYMENT OF THE MAINTENANCE FEE BE ACCEPTED AND THE PATENT REINSTATED

THIS PORTION MUST BE COMPLETED BY THE SIGNATORY OR SIGNATORIES

37 CFR 1.378(d) states: "Any petition under this section must be signed by an attorney or agent registered to practice before the Patent and Trademark Office, or by the patentee, the assignee, or other party in interest."

I certify, in accordance with 37 CFR 1.4(d)(4) that I am

◉ An attorney or agent registered to practice before the Patent and Trademark Office

○ A sole patentee

○ A joint patentee; I certify that I am authorized to sign this submission on behalf of all the other patentees.

○ A joint patentee; all of whom are signing this e-petition

○ The assignee of record of the entire interest

Patent Practitioner			
A signature of the applicant or representative is required in accordance with 37 CFR 1.33 and 10.18. Please see 37 CFR 1.4(d) for the form of the signature			
Signature	/Stanley J. Gradisar/	Date (YYYY-MM-DD)	2009-10-13
Name	Stanley J. Gradisar	Registration Number	42598

This collection of information is required by 37 CFR 1.378(c). The information is required to obtain or retain a benefit by the public which is to file (and by the USPTO to process) an application. Confidentiality is governed by 35 U.S.C. 122 and 37 CFR 1.11 and 1.14. This collection is estimated to take 1 hour to complete, including gathering, preparing, and submitting the completed application form to the USPTO. Time will vary depending upon the individual case. Any comments on the amount of time you require to complete this form and/ or suggestions for reducing this burden, should be sent to the Chief Information Officer, U.S. Patent and Trademark Office, U.S. Department of Commerce, P.O. Box 1450, Alexandria, VA 22313-1450. DO NOT SEND FEES OR COMPLETED FORMS TO THIS ADDRESS. **This form can only be used when in conjunction with EFS-Web. If this form is mailed to the USPTO, it may cause delays in reinstating the patent.**

Privacy Act Statement

The Privacy Act of 1974 (P.L. 93-579) requires that you be given certain information in connection with your submission of the attached form related to a patent application or patent. Accordingly, pursuant to the requirements of the Act, please be advised that: (1) the general authority for the collection of this information is 35 U.S.C. 2(b)(2); (2) furnishing of the information solicited is voluntary; and (3) the principal purpose for which the information is used by the U.S. Patent and Trademark Office is to process and/or examine your submission related to a patent application or patent. If you do not furnish the requested information, the U.S. Patent and Trademark Office may not be able to process and/or examine your submission, which may result in termination of proceedings or abandonment of the application or expiration of the patent.

The information provided by you in this form will be subject to the following routine uses:

1. The information on this form will be treated confidentially to the extent allowed under the Freedom of Information Act (5 U.S.C. 552) and the Privacy Act (5 U.S.C. 552a). Records from this system of records may be disclosed to the Department of Justice to determine whether the Freedom of Information Act requires disclosure of these records.

2. A record from this system of records may be disclosed, as a routine use, in the course of presenting evidence to a court, magistrate, or administrative tribunal, including disclosures to opposing counsel in the course of settlement negotiations.

3. A record in this system of records may be disclosed, as a routine use, to a Member of Congress submitting a request involving an individual, to whom the record pertains, when the individual has requested assistance from the Member with respect to the subject matter of the record.

4. A record in this system of records may be disclosed, as a routine use, to a contractor of the Agency having need for the information in order to perform a contract. Recipients of information shall be required to comply with the requirements of the Privacy Act of 1974, as amended, pursuant to 5 U.S.C. 552a(m).

5. A record related to an International Application filed under the Patent Cooperation Treaty in this system of records may be disclosed, as a routine use, to the International Bureau of the World Intellectual Property Organization, pursuant to the Patent Cooperation Treaty.

6. A record in this system of records may be disclosed, as a routine use, to another federal agency for purposes of National Security review (35 U.S.C. 181) and for review pursuant to the Atomic Energy Act (42 U.S.C. 218(c)).

7. A record from this system of records may be disclosed, as a routine use, to the Administrator, General Services, or his/her designee, during an inspection of records conducted by GSA as part of that agency's responsibility to recommend improvements in records management practices and programs, under authority of 44 U.S.C. 2904 and 2906. Such disclosure shall be made in accordance with the GSA regulations governing inspection of records for this purpose, and any other relevant (i.e., GSA or Commerce) directive. Such disclosure shall not be used to make determinations about individuals.

8. A record from this system of records may be disclosed, as a routine use, to the public after either publication of the application pursuant to 35 U.S.C. 122(b) or issuance of a patent pursuant to 35 U.S.C. 151. Further, a record may be disclosed, subject to the limitations of 37 CFR 1.14, as a routine use, to the public if the record was filed in an application which became abandoned or in which the proceedings were terminated and which application is referenced by either a published application, an application open to public inspections or an issued patent.

9. A record from this system of records may be disclosed, as a routine use, to a Federal, State, or local law enforcement agency, if the USPTO becomes aware of a violation or potential violation of law or regulation.

UNITED STATES PATENT AND TRADEMARK OFFICE

Commissioner for Patents
United States Patent and Trademark Office
P.O. Box 1450
Alexandria, VA 22313-1450
www.uspto.gov

In re Patent No. 6932041
Issue Date: August 23,2005
Application No. 10816098
Filed: April 1,2004
Attorney Docket No. 79399-00010

:
:DECISION GRANTING PETITION
:UNDER 37 CFR 1.378(c)
:

This is a decision on the electronic petition, filed October 13,2009 ,under 37 CFR 1.378(c) to accept the unintentionally delayed payment of the 3.5 year maintenance fee for the above-identified patent.

The petition is **GRANTED**.

The maintenance fee is accepted, and the above-identified patent reinstated as of October 13,2009 . This decision also constitutes notice that the fee has been accepted. An electronic copy of the petition and this decision has been created as an entry in the Image File Wrapper. Nevertheless, petitioner should print and retain an independent copy.

Telephone inquiries related to this electronic decision should be directed to the Electronic Business Center at 1-866-217-9197.

UNITED STATES PATENT AND TRADEMARK OFFICE

COMMISSIONER FOR PATENTS
UNITED STATES PATENT AND TRADEMARK OFFICE
P.O. BOX 1450
ALEXANDRIA, VA 22313-1450
www.uspto.gov

MCANDREWS HELD & MALLOY, LTD
500 WEST MADISON STREET
SUITE 3400
CHICAGO, IL 60661

COPY MAILED

NOV 10 2004

OFFICE OF PETITIONS

In re Application of :
Julstrom, et al. :
Filed: April 1, 2004 : ON PETITION
Application No. 10/816,119 :
Atty. Dkt. No.: 12624US06 :

This decision in response to the "PETITION UNDER 37 C.F.R. § 1.182 RESPONSE TO NOTICE OF OMITTED ITEM OF NONPROVISIONAL APPLICATION," filed October 12, 2004, requesting that Fig. 30B be accepted as part of the disclosure of the instant application.

The application was filed April 1, 2004. The Notice to File Missing Parts of Nonprovisional Application ("Notice") mailed August 9, 2004 indicated, *inter alia*, that the application had been accorded a filing date but that Fig. 30B appeared to have been omitted from the specification.

The Notice permits applicant to either: (1) promptly establish prior receipt in the PTO of the drawing(s) at issue (generally by way of a date-stamped postcard receipt (MPEP 503)), or (2) promptly submit the omitted drawing(s) in a nonprovisional application and accept the date of such submission as the application filing date. An applicant asserting that the missing drawings were in fact deposited in the PTO with the application papers must file a petition (and the appropriate petition fee) with evidence of such deposit. An applicant desiring to submit the omitted drawings in a nonprovisional application and accept the date of such submission as the application filing date must file any omitted drawing(s) with an oath or declaration in compliance with 37 CFR 1.63 and 1.64 referring to such drawing(s) and a petition under 37 CFR 1.182 (with the petition fee under 37 CFR 1.17(h)) requesting the later filing date within two months of the date of the Notice (37 CFR 1.181(f)).

In response to the Notice, petitioners submitted the omitted item. Petitioners request, in effect, that Fig. 30B be entered into the record.

It is noted that the specification for the instant application contains an incorporation statement. An incorporation by reference statement may be relied upon to permit the entering of a portion of

the prior application into the continuation or divisional application when the portion of the prior application has been inadvertently omitted from the submitted application papers in the continuation or divisional application. The inclusion of this incorporation by reference of the prior application(s) will permit an applicant to amend the continuation or divisional application to include any subject matter in such prior application(s), without the need for a petition provided the continuation or divisional application is entitled to a filing date notwithstanding the incorporation by reference. *See*, MPEP 201.06(c).

Based on petitioner's representation that Fig. 30B is part of the disclosure of application No. 10/356,290 and the entire disclosure of application No. 10/356,290 was specifically incorporated by reference in the present application on April 1, 2004, it appears that Fig. 30B was present in the Office on April 1, 2004, albeit in the file of another application, i.e., application No. 10/356,290. Therefore, the application is entitled to a filing date of April 1, 2004. However, petitioners are advised to promptly submit a preliminary amendment requesting entry of the omitted figure prior to the issuance of the first Office action on the merits.

The required petition fee of $130.00 will not be refunded since the petition was necessary to correct petitioner's filing error.

In view of the above, the petition is **DISMISSED**.

The application is being returned to the Office of Initial Patent Examination for further processing with a filing date of April 1, 2004 using the papers present on that day.

Telephone inquiries related to this decision may be directed to the undersigned at (571) 272-3205.

Alesia M. Brown
Senior Petitions Attorney
Office of Petitions

UNITED STATES PATENT AND TRADEMARK OFFICE

UNITED STATES DEPARTMENT OF COMMERCE
United States Patent and Trademark Office
Address: COMMISSIONER FOR PATENTS
P.O. Box 1450
Alexandria, Virginia 22313-1450
www.uspto.gov

HICKMAN PALERMO TRUONG & BECKER LLP/Apple Inc.
2055 GATEWAY PLACE
SUITE 550
SAN JOSE, CA 95110-1083

Mail Date: 04/21/2010

Applicant	: Egan Schulz	: DECISION ON REQUEST FOR
Patent Number	: 7653550	: RECALCULATION of PATENT
Issue Date	: 01/26/2010	: TERM ADJUSTMENT IN VIEW
Appliction No	: 10/816,121	: OF WYETH AND NOTICE OF INTENT TO
Filed	: 04/01/2004	: ISSUE CERTIFICATE OF CORRECTION
		:

The Request for Recalculation is **GRANTED** to the extent indicated.

The patent term adjustment has been determined to be **936** days. The USPTO will *sua sponte* issue a certificate of correction reflecting the amount of PTA days determined by the recalculation.

Prior to the issuance of the certificate of correction, the USPTO will afford patentee an opportunity to be heard and request reconsideration. Accordingly, patentee has **one month or thirty (30) days**, whichever is longer, to file a request for reconsideration of this patent term adjustment calculation. See 35 U.S.C. 154(b)(3)(B)(ii) and 37 CFR 1.322(a)(4). No extensions of time will be granted under 37 CFR 1.136.

Patentee should use document code PET.OP if electronically filing a request for reconsideration of this patent term adjustment calculation. The patentee must also include the information required by 37 CFR 1.705(b)(2) and the fee required by 37 CFR 1.18(e). If patentee does not file a timely request for reconsideration of this patent term adjustment calculation including the information required by 37 CFR 1.705(b)(2) and the fee required by 37 CFR 1.18(e), the USPTO will issue a certificate of correction reflecting the PTA determination noted above.

Patentee should be aware that in order to preserve the right to review in the United States District Court for the District of Columbia of the USPTO patent term adjustment determination, patentee must ensure that he or she also take the steps required under 35 U.S.C. 154(b)(4)(A) in a timely manner. Nothing in the request for recalculation should be construed as providing an alternative time frame for commencing a civil action under 35 U.S.C. 154(b)(4)(A).

Any questions concerning this decision should be directed to the Office of Patent Legal Administration at 571-272-7702.

UNITED STATES PATENT AND TRADEMARK OFFICE

Commissioner for Patents
United States Patent and Trademark Office
P.O. Box 1450
Alexandria, VA 22313-1450
www.uspto.gov

Glenn Patent Group
3475 Edison Way, Suite L
Menlo Park, CA 94025

COPY MAILED

JAN 0 5 2007

OFFICE OF PETITIONS

In re Application of	:	
Dov Jacobson	:	
Application No. 10/816,123	:	DECISION ON PETITION
Filed: April 1, 2004	:	TO WITHDRAW
Attorney Docket No. JACO0001	:	FROM RECORD

This is a decision on the Request to Withdraw as attorney or agent of record under 37 C.F.R. § 1.36(b), filed September 29, 2006.

The request is **APPROVED**.

A grantable request to withdraw as attorney/agent of record must be signed by every attorney/agent seeking to withdraw or contain a clear indication that one attorney is signing on behalf of another/others. A request to withdraw will not be approved unless at least 30 (thirty) days would remain between the date of approval and the later of the expiration date of a time to file a response or the expiration date of the maximum time period which can be extended under 37 C.F.R. § 1.136(a).

The request was signed by Michael A. Glenn on behalf of all attorneys of record who are associated with Customer No. 22862.

All attorneys/agents associated with the Customer No. 22862 have been withdrawn.

Applicant is reminded that there is no attorney of record at this time.

All future correspondence will be directed to the first named inventor Dov Jacobson at the address indicated below.

There is no outstanding Office action at this time.

Telephone inquiries concerning this decision should be directed to Terri Williams at 571-272-2991.

T. Williams

Terri Williams
Petitions Examiner
Office of Petitions

cc: **Dov Jacobson**
620 Lakeshore Drive
Berkeley Lake, GA 30096-3038

UNITED STATES PATENT AND TRADEMARK OFFICE

UNITED STATES DEPARTMENT OF COMMERCE
United States Patent and Trademark Office
Address: COMMISSIONER FOR PATENTS
P.O. Box 1450
Alexandria, Virginia 22313-1450
www.uspto.gov

APPLICATION NUMBER	FILING OR 371 (c) DATE	FIRST NAMED APPLICANT	ATTY. DOCKET NO./TITLE
10/816,123	04/01/2004	Dov Jacobson	JACO0001

CONFIRMATION NO. 9619

OC000000021839146

OC000000021839146

22862
GLENN PATENT GROUP
3475 EDISON WAY, SUITE L
MENLO PARK, CA 94025

Date Mailed: 01/04/2007

NOTICE REGARDING CHANGE OF POWER OF ATTORNEY

This is in response to the Power of Attorney filed 09/29/2006.

- The withdrawal as attorney in this application has been accepted. Future correspondence will be mailed to the new address of record. 37 CFR 1.33.

Terri S. Williams

TERRI S WILLIAMS
OP (571) 272-2991

OFFICE COPY

SPE RESPONSE FOR CERTIFICATE OF CORRECTION

Paper No.: _____

DATE : 10/02/07

TO SPE OF : ART UNIT 3725

SUBJECT : Request for Certificate of Correction for Appl. No.: **10/816124** Patent No.: **7040557**

Please respond to this request for a certificate of correction within 7 days.

Please review the requested changes/corrections as shown in the **COCIN** document(s) in the IFW application image. No new matter should be introduced, nor should the scope or meaning of the claims be changed.

Please complete the response (see below) and forward the completed response to scanning using document code **COCX**.

Angela Green
Certificates of Correction Branch
703.308.9380 ext. 123

Thank You For Your Assistance

The request for issuing the above-identified correction(s) is hereby:
Note your decision on the appropriate box.

- ☐ **Approved** — **All** changes apply.
- ☒ **Approved in Part** — Specify below which changes **do not** apply.
- ☐ **Denied** — State the reasons for denial below.

Comments: The following changes are incorrect and have not been entered: column 11, line 20; column 13, line 8; column 19, line 52; column 19, line 56, column 20, line 56.

Mark Rosenbaum

DERRIS H. BANKS
SUPERVISORY PATENT EXAMINER
SPE TECHNOLOGY CENTER 3700

3725
Art Unit

UNITED STATES PATENT AND TRADEMARK OFFICE

COMMISSIONER FOR PATENTS
UNITED STATES PATENT AND TRADEMARK OFFICE
P.O. BOX 1450
ALEXANDRIA, VA 22313-1450
www.uspto.gov

RICHARD M. GOLDBERG
25 EAST SALEM STREET
SUITE 419
HACKENSACK, NJ 07601

COPY MAILED

JUN 30 2006

OFFICE OF PETITIONS

In re Patent No. 6,901,853	:	
Issued: June 7, 2005	:	
Application No. 10/816,130	:	NOTICE
Filed: April 1, 2004	:	
Attorney Docket No. 344/1/076	:	

This is a notice regarding your request for acceptance of a fee deficiency submission under 37 CFR 1.28. On September 1, 1998, the Court of Appeals for the Federal Circuit held that 37 CFR 1.28(c) is the sole provision governing the time for correction of the erroneous payment of the issue fee as a small entity. **See DH Technology v. Synergystex International, Inc. 154 F.3d 1333, 47 USPQ2d 1865 (Fed. Cir. Sept. 1, 1998).**

The Office no longer investigates or rejects original or reissue applications under 37 CFR 1.56. **1098 Off. Gaz. Pat. Office 502 (January 3, 1989).** Therefore, nothing in this Notice is intended to imply that an investigation was done.

Your fee deficiency submission under 37 CFR 1.28 is hereby **ACCEPTED**.

Inquiries related to this communication should be directed to the Office of Petitions Staff at (571) 272-3282.

Sherry D. Brinkley
Petitions Examiner
Office of Petitions

UNITED STATES PATENT AND TRADEMARK OFFICE

Commissioner for Patents
United States Patent and Trademark Office
P. O. Box 1450
Alexandria, VA 22313-1450
www.uspto.gov

JANAH & ASSOCIATES, P.C.
650 DELANCEY STREET, SUITE 106
SAN FRANCISCO, CA 94107

COPY MAILED

JUN 0 4 2007

OFFICE OF PETITIONS

In re Application of :
Karl Brown et al :
Application No. 10/816,152 :
Filed: March 31, 2004 :
Attorney Docket No. 008325 :
USA/CPI/LINER/BARR

ON PETITION

This is a decision on the petition under 37 CFR 1.137(b), filed December 19, 2006, to revive the above-identified application.

The petition is **GRANTED**.

The above-identified application became abandoned for failure to reply in a timely manner to the non-final Office action mailed April 24, 2006, which set a shortened statutory period for reply of three (3) months. No extension of time under the provisions of 37 CFR 1.136(a) were obtained. Accordingly, the above-identified application became abandoned on July 25, 2006.

Telephone inquiries concerning this decision should be directed to Irvin Dingle at (571) 272-3210.

This matter is being referred to Technology Center AU 2836 for further processing.

Irvin Dingle
Petitions Examiner
Office of Petitions

UNITED STATES PATENT AND TRADEMARK OFFICE

Commissioner for Patents
United States Patent and Trademark Office
P.O. Box 1450
Alexandria, VA 22313-1450
www.uspto.gov

JANAH & ASSOCIATES, P.C.
650 DELANCEY STREET, SUITE 106
SAN FRANCISCO, CA 94107

COPY MAILED

FEB 17 2009

OFFICE OF PETITIONS

In re Application of	:	
Karl Brown et al	:	
Application No. 10/816,152	:	ON PETITION
Filed: March 31, 2004	:	
Attorney Docket No. 008325	:	

This is a decision on the petition under the unintentional provisions of 37 CFR 1.137(b), filed January 23, 2009, to revive the above-identified application.

The petition is **GRANTED.**

The application became abandoned for failure to timely file a reply within the meaning of 37 CFR 1.113 to the final Office action of April 30, 2008. The proposed reply required for consideration of a petition to revive must be a Notice of Appeal (and appeal fee required by 37 CFR 41.20(b)(2), an amendment that prima facie places the application in condition for allowance, a Request for Continued Examination and submission (37 CFR 1.114), or the filing of a continuing application under 37 CFR 1.53(b). See MPEP 711.03(c)(III)(A)(2). One-month (1) extension of time pursuant to the provisions of 37 CFR 1.136(a) was obtained. Accordingly, the date of abandonment of this application is August 31, 2008.

The petition satisfies the requirements of 37 CFR 1.137(b) in that petitioner has supplied (1) the reply in the form of a Request for Continued Examination (RCE) and fee of $810 and the submission required by 37 CFR 1.114; (2) the petition fee of $1620; and (3) a proper statement of unintentional delay.

Telephone inquiries concerning this decision should be directed to the undersigned at (571) 272-3210.

This application is being referred to Technology Center AU 2836 for processing of the RCE and for appropriate action by the Examiner in the normal course of business on the amendment submitted in accordance with 37 CFR 1.114.

Irvin Dingle
Petition Examiner
Office of Petitions

UNITED STATES PATENT AND TRADEMARK OFFICE

Commissioner for Patents
United States Patent and Trademark Office
P.O. Box 1450
Alexandria, VA 22313-1450
www.uspto.gov

COPY MAILED

AUG 26 2009

OFFICE OF PETITIONS

FISH & RICHARDSON P.C.
PO BOX 1022
MINNEAPOLIS MN 55440-1022

In re Patent No.7,475,267	:	
Bogdan Cocosel	:	DECISION DISMISSING
Application No. 10/816,155	:	REQUEST FOR
Issue Date: January 6, 2009	:	RECONSIDERATION OF
Filed: March 31, 2004	:	PATENT TERM ADJUSTMENT
Atty. Docket No.16113-1324001	:	

This is in response to the APPLICATION FOR PATENT TERM ADJUSTMENT UNDER 37 CFR 1.705(d), filed March 5, 2009. Patentee requests that the determination of patent term adjustment be corrected from four hundred thirty-six (436) days to eight hundred eighty-three (883) days.

The request for reconsideration of patent term adjustment is **DISMISSED** with respect to making any change in the patent term adjustment determination under 35 U.S.C. § 154(b) of 436 days.

BACKGROUND

This application was filed on March 31, 2004. On January 6, 2009, the application matured into U.S. Patent No. 7,475,267, with a revised patent term adjustment of 436 days. The Office determined that the 647 days of Office delay, pursuant to 35 U.S.C. 154(b)(1)(B) and 37 CFR 1.702(b), overlaps with the 447 days of Office delay, pursuant to 35 U.S.C. 154(b)(1)(A) and 37 CFR 1.702(a)(1), accorded during the pendency of the application. As such, the Office allowed entry of only the period of adjustment of 647 days. Given the 211 days of applicant delay, the patent issued with a revised patent term adjustment of 436 days.

On March 5, 2009, patentee timely submitted this request for reconsideration of patent term adjustment (with required fee),

asserting that the correct number of days of Patent Term Adjustment is 883 days under the court's interpretation of the overlap provision as set forth in Wyeth v. Dudas, 580 F. Supp. 2d 138, 88 U.S.P.Q. 2d 1538 (D.D.C. 2008). Patentee asserts that pursuant to Wyeth, a PTO delay under §154(b)(1)(A) overlaps with a delay under §154(b)(1)(B) only if the delays "occur on the same day." Patentee maintains that the total non-overlapping PTO delay under §154(b)(1)(A) & (B) is 883 days as these periods do not occur on the same day. Further, given the applicant delay of 211 days, patentee asserts entitlement to 883 (647 + 447 - 211) days of patent term adjustment.

OPINION

Patentee's interpretation of the period of overlap has been considered, but found inconsistent with the Office's interpretation of the overlap provision, 35 U.S.C. 154(b)(2)(A). 35 U.S.C. 154(b)(2)(A) limits the adjustment of patent term, as follows:

> to the extent that the periods of delay attributable to grounds specified in paragraph (1) overlap, the period of any adjustment granted under this subsection shall not exceed the actual number of days the issuance of the patent was delayed.

As explained in *Explanation of 37 CFR 1.703(f)*[1] *and of the United States Patent and Trademark Office Interpretation of 35 U.S.C. 154(b)(2)(A)*, 69 Fed. Reg. 34283 (June 21, 2004), the Office interprets 35 U.S.C. 154(b)(2)(A) as permitting either patent term adjustment under 35 U.S.C. 154(b)(1)(A)(i)-(iv), or patent term adjustment under 35 U.S.C. 154(b)(1)(B), but not as permitting patent term adjustment under both 35 U.S.C. 154(b)(1)(A)(i)-(iv) and 154(b)(1)(B). Accordingly, the Office implements the overlap provision as follows:

> If an application is entitled to an adjustment under 35 U.S.C. 154(b)(1)(B), the entire period during which the

[1] Likewise, 37 CFR 1.703(f) provides that:

> To the extent that periods of delay attributable to the grounds specified in §1.702 overlap, the period of adjustment granted under this section shall not exceed the actual number of days the issuance of the patent was delayed.

> application was pending (except for periods excluded under 35 U.S.C. 154(b)(1)(B)(i)-(iii)), and not just the period beginning three years after the actual filing date of the application, is the period of delay under 35 U.S.C. 154(b)(1)(B) in determining whether periods of delay overlap under 35 U.S.C. 154(b)(2)(A). Thus, any days of delay for Office issuance of the patent more than 3 years after the filing date of the application, which overlap with the days of patent term adjustment accorded prior to the issuance of the patent will not result in any additional patent term adjustment. See 35 U.S.C. 154(b)(1)(B), 35 U.S.C. 154(b)(2)(A), and 37 CFR § 1.703(f). See *Changes to Implement Patent Term Adjustment Under Twenty Year Term; Final Rule*, 65 Fed. Reg. 56366 (Sept. 18, 2000). See also *Revision of Patent Term Extension and Patent Term Adjustment Provisions; Final Rule*, 69 Fed. Reg. 21704 (April 22, 2004), 1282 Off. Gaz. Pat. Office 100 (May 18, 2004). See also *Explanation of 37 CFR 1.703(f) and of the United States Patent and Trademark Office Interpretation of 35 U.S.C. 154(b)(2)(A)*, 69 Fed. Reg. 34283 (June 21, 2004).

Further, as stated in the *Explanation of 37 CFR 1.703(f) and of the United States Patent and Trademark Office Interpretation of 35 U.S.C. 154(b)(2)(A)*, the Office has consistently taken the position that if an application is entitled to an adjustment under the three-year pendency provision of 35 U.S.C. 154(b)(1)(B), the entire period during which the application was pending before the Office (except for periods excluded under 35 U.S.C. 154(b)(1)(B)(i)-(iii)), and not just the period beginning three years after the actual filing date of the application, is the relevant period under 35 U.S.C. 154(b)(1)(B) in determining whether periods of delay "overlap" under 35 U.S.C. 154(b)(2)(A).

This interpretation is consistent with the statute. Taken together the statute and rule provide that to the extent that periods of delay attributable to grounds specified in 35 U.S.C. 154(b)(1) and in corresponding §1.702 overlap, the period of adjustment granted shall not exceed the actual number of days the issuance of the patent was delayed.

In this instance, the relevant period under 35 U.S.C. 154(b)(1)(B) in determining whether periods of delay "overlap" under 35 U.S.C. 154(b)(2)(A) is the period during which the application was pending before the Office beginning on the

application filing date under 35 U.S.C. 111(a), March 31, 2004, and ending on the date the patent issued, January 6, 2009,(not including any other periods excluded under 35 U.S.C. 154(b)(1)(B)(i)-(iii)).

Pursuant to 35 U.S.C. 154(b)(1)(A) and 37 CFR 1.702(a)(1)[2], 447 days[3] of patent term adjustment were accorded during the pendency of the application for Office delay prior to the issuance of patent. Pursuant to 35 U.S.C. 154(b)(1)(B) and 37 CFR 1.702(b)[4], 647 days of patent term adjustment accrued for Office issuance of the patent more than 3 years after the filing date of the application.

All of the 647 days of patent term adjustment under 37 CFR 1.702(b) overlap with the 447 days of patent term adjustment under 37 CFR 1.702(a)(1). Entry of both the 647 days and the 447 days is neither permitted nor warranted. The Office accorded the greater period of 647 days for Office delay.

Accordingly, at issuance, the Office properly entered 200 additional days of patent term adjustment for the Office taking

---

[2] 37 CFR § 1.702, provides grounds for adjustment of patent term due to examination delay under the Patent Term Guarantee Act of 1999 (original applications, other than designs, filed on or after May 29, 2000).

> (a) Failure to take certain actions within specified time frames. Subject to the provisions of 35 U.S.C. 154(b) and this subpart, the term of an original patent shall be adjusted if the issuance of the patent was delayed due to the failure of the Office to:
> (1) Mail at least one of a notification under 35 U.S.C. 132 or a notice of allowance under 35 U.S.C. 151 not later than fourteen months after the date on which the application was filed under 35 U.S.C. 111(a) or fulfilled the requirements of 35 U.S.C. 371 in an international application;

[3] A non-final Office action was mailed on August 21, 2006, 14 months and 447 days after the application was filed on March 31, 2004.

[4] Pursuant to 35 U.S.C. 154(b)(1)(B), 37 CFR 1.702(b) provides, in pertinent part, that:

Failure to issue a patent within three years of the actual filing date of the application. Subject to the provisions of 35 U.S.C. 154(b) and this subpart, the term of an original patent shall be adjusted if the issuance of the patent was delayed due to the failure of the Office to issue a patent within three years after the date on which the application was filed under 35 U.S.C. 111(a) or the national stage commenced under 35 U.S.C. 371(b) or (f) in an international application.

in excess of three years to issue the patent for a total Office delay of 647 days.

CONCLUSION

In view thereof, the Office affirms that the revised determination of patent term adjustment at the time of the issuance of the patent is 436 days.

The Office acknowledges submission of the $200.00 fee set forth in 37 CFR 1.18(e). No additional fees are required.

Telephone inquiries specific to this matter should be directed to Kenya A. McLaughlin, Petitions Attorney, at (571) 272-3222.

Christina Tartera Donnell

Christina Tartera Donnell
Senior Petitions Attorney
Office of Petitions

UNITED STATES PATENT AND TRADEMARK OFFICE

COMMISSIONER FOR PATENTS
UNITED STATES PATENT AND TRADEMARK OFFICE
P.O. BOX 1450
ALEXANDRIA, VA 22313-1450
WWW.USPTO.GOV

Paper No. None

TOWNSEND AND TOWNSEND AND CREW, LLP
TWO EMBARCADERO CENTER
EIGHTH FLOOR
SAN FRANCISCO CA 94111-3834

COPY MAILED

APR 25 2005

OFFICE OF PETITIONS

In re Application of :
Richard Daifuku, Alexander Gall, Dmitri Sergueev, Dina Sologub, and Kevin Harris :
Application No. 10/181,161 :
Filed: March 31, 2004 :
Attorney Docket No. 021227-000410US :
Title: PRODRUGS OF HETEROARYL COMPOUNDS :

DECISION ON PETITION
UNDER 37 C.F.R. §1.47(a)

This is in response to the petition under 37 C.F.R. §1.47(a)[1], filed September 27, 2004.

On March 31, 2004, the application was deposited, identifying Richard Daifuku, Alexander Gall, Dmitri Sergueev, Dina Sologub, and Kevin Harris as joint inventors. No oath or declaration was included on filing. On June 14, 2004, a "Notice to File Missing Parts of Nonprovisional Application – Filing Date Granted" (Notice) was mailed, indicating that a fully executed oath or declaration and a surcharge of $65.00 were required. This Notice set a two-month period for reply.

With the instant petition, Petitioner has also submitted the petition fee, the surcharge associated with the late submission of an oath or declaration, a declaration of facts, a declaration which has been executed by joint inventors Sologub and Harris, the last known address of the non-signing

1A grantable petition under 37 C.F.R. §1.47(a) requires:
(1) the petition fee of $130;
(2) a surcharge of either $65 or $130 if the petition is not filed at the time of filing the application, as set forth in 37 CFR § 1.16(e);
(3) a statement of the last known address of the non-signing inventors;
(4) either
a) proof that a copy of the entire application (specification, claims, drawings, and the oath or declaration) was sent or given to the non-signing inventor for review and proof that the non-signing inventor refuses to join in the application or
b) proof that the non-signing inventor cannot be found or reached after diligent effort;
(5) a declaration which complies with 37 CFR §1.63.

inventors, copies of letters, and copies of postal return receipts. Petitioner has also properly included a two-month extension of time to make timely this response.

Petitioner has met each of the 5 requirements above.

The petition is **GRANTED** and this application is hereby accorded Rule §1.47(a) status.

As provided in Rule 1.47(a), this Office will forward notice of this application's filing to the non-signing inventor at the addresses given in the petition. Notice of the filing of this application will also be published in the Official Gazette.

After this decision is mailed, the application will be forwarded to Technology Center 1600 for further processing.

The general phone number for the Office of Petitions which should be used for status requests is (571) 272-3282. Telephone inquiries regarding *this decision* should be directed to the undersigned at (571) 272-3225.

Paul Shanoski
Senior Attorney
Office of Petitions
United States Patent and Trademark Office

UNITED STATES PATENT AND TRADEMARK OFFICE

COMMISSIONER FOR PATENTS
UNITED STATES PATENT AND TRADEMARK OFFICE
P.O. BOX 1450
ALEXANDRIA, VA 22313-1450
WWW.USPTO.GOV

Richard Daifuku
9270 SE 36th Place
Mercer Island, WA 98040

COPY MAILED

APR 25 2005

OFFICE OF PETITIONS

In re Application of :

Richard Daifuku, Alexander Gall, Dmitri Sergueev, Dina Sologub, and Kevin Harris :
Application No. 10/181,161 :
Filed: March 31, 2004 :
Attorney Docket No. 021227-000410US :
Title: PRODRUGS OF HETEROARYL COMPOUNDS :

LETTER

Dear Mr. Daifuku:

You are named as a joint inventor in the above-identified United States patent application filed under the provisions of 35 U.S.C. 116 (United States Code) and 37 CFR 1.47(a), Rules of Practice in Patent Cases. Should a patent be granted on the application you will be designated therein as a joint inventor.

As a named inventor you are entitled to inspect any paper in the file wrapper of the application, order copies of all or any part thereof (at a prepaid cost per 37 CFR 1.19) or make your position of record in the application. Alternatively, you may arrange to do any of the preceding through a registered patent attorney or agent presenting written authorization from you. If you care to join the application, the attorney of record below would presumably assist you. Joining in the application would entail the filing of an appropriate oath or declaration by you pursuant to 37 CFR 1.63.

Telephone inquiries regarding this communication should be directed to the undersigned at (571) 272-3225. Requests for information regarding your application should be directed to the File Information Unit at (703) 308-2733. Information regarding how to pay for and order a copy of the application, or a specific paper in the application, should be directed to the Certification Division at (703) 308-9726 or 1-800-972-6382 (outside the Washington D.C. area).

Paul Shanoski
Senior Attorney
Office of Petitions
United States Patent and Trademark Office

cc: TOWNSEND AND TOWNSEND AND CREW, LLP
TWO EMBARCADERO CENTER
EIGHTH FLOOR
SAN FRANCISCO CA 94111-3834

UNITED STATES PATENT AND TRADEMARK OFFICE

COMMISSIONER FOR PATENTS
UNITED STATES PATENT AND TRADEMARK OFFICE
P.O. BOX 1450
ALEXANDRIA, VA 22313-1450
WWW.USPTO.GOV

Alexander Gall
20051 170th Avenue NE
Woodinville, WA 98072

COPY MAILED

APR 25 2005

OFFICE OF PETITIONS

In re Application of :

Richard Daifuku, Alexander Gall, Dmitri Sergueev, Dina Sologub, and Kevin Harris :
Application No. 10/181,161 : LETTER
Filed: March 31, 2004 :
Attorney Docket No. 021227-000410US :
Title: PRODRUGS OF HETEROARYL COMPOUNDS :

Dear Mr. Gall:

You are named as a joint inventor in the above-identified United States patent application filed under the provisions of 35 U.S.C. 116 (United States Code) and 37 CFR 1.47(a), Rules of Practice in Patent Cases. Should a patent be granted on the application you will be designated therein as a joint inventor.

As a named inventor you are entitled to inspect any paper in the file wrapper of the application, order copies of all or any part thereof (at a prepaid cost per 37 CFR 1.19) or make your position of record in the application. Alternatively, you may arrange to do any of the preceding through a registered patent attorney or agent presenting written authorization from you. If you care to join the application, the attorney of record below would presumably assist you. Joining in the application would entail the filing of an appropriate oath or declaration by you pursuant to 37 CFR 1.63.

Telephone inquiries regarding this communication should be directed to the undersigned at (571) 272-3225. Requests for information regarding your application should be directed to the File Information Unit at (703) 308-2733. Information regarding how to pay for and order a copy of the application, or a specific paper in the application, should be directed to the Certification Division at (703) 308-9726 or 1-800-972-6382 (outside the Washington D.C. area).

Paul Shanoski
Senior Attorney
Office of Petitions
United States Patent and Trademark Office

cc: TOWNSEND AND TOWNSEND AND CREW, LLP
TWO EMBARCADERO CENTER
EIGHTH FLOOR
SAN FRANCISCO CA 94111-3834

SPE RESPONSE FOR CERTIFICATE OF CORRECTION

Paper No.: _____

DATE : July 16, 2009

TO SPE OF : ART UNIT 1624
SUBJECT : Request for Certificate of Correction for Appl. No.: 10/816161/7244732

Please respond to this request for a certificate of correction within 7 days.

FOR IFW FILES:

Please review the requested changes/corrections as shown in the **COCIN** document(s) in the IFW application image. No new matter should be introduced, nor should the scope or meaning of the claims be changed.

Please complete the response (see below) and forward the completed response to scanning using document code **COCX**.

FOR PAPER FILES:

Please review the requested changes/corrections as shown in the attached certificate of correction. Please complete this form (see below) and forward it with the file to:

Certificates of Correction Branch (CofC)
South Tower - 9A22
Palm Location 7580

Magdalene Talley
Certificates of Correction Branch
703-308-9390 ext. 120

Thank You For Your Assistance

The request for issuing the above-identified correction(s) is hereby:
Note your decision on the appropriate box.

☒ **Approved**	**All** changes apply.
☐ **Approved in Part**	Specify below which changes **do not** apply.
☐ **Denied**	State the reasons for denial below.

Comments: _____

SPE

1624
Art Unit

UNITED STATES PATENT AND TRADEMARK OFFICE

Commissioner for Patents
United States Patent and Trademark Office
P.O. Box 1450
Alexandria, VA 22313-1450
www.uspto.gov

COPY MAILED

MAR 17 2008

Townsend and Townsend and Crew, LLP
Two Embarcadero Center
Eighth Floor
San Francisco, CA 94111-3834

In re Application of	:	
James F. Zucherman et al.	:	
Application No. 10/816,173	:	DECISION ON PETITION
Filed: April 1, 2004	:	TO WITHDRAW
Attorney Docket No. 5910-194	:	FROM RECORD
	:	

This is a decision on the Request to Withdraw as attorney or agent of record under 37 C.F.R. § 1.36(b), filed November 14, 2007.

The request is **NOT APPROVED** because it is moot.

A review of the file record indicates that the power of attorney to Townsend and Townsend and Crew, LLP has been revoked by the assignee of the patent application on December 13, 2007. Accordingly, the request to withdraw under 37 C.F.R. § 1.36(b) is moot.

All future communications from the Office will continue to be directed to the below-listed address until otherwise notified by applicant.

Telephone inquires concerning this decision should be directed to Terri Williams at 571-272-2991.

T. Williams

Terri Williams
Petitions Examiner
Office of Petitions

cc: **Coats & Bennett/Medtronics**
1400 Crescent Green
Suite 300
Cary, NC 27518

UNITED STATES PATENT AND TRADEMARK OFFICE

Commissioner for Patents
United States Patent and Trademark Office
P.O. Box 1450
Alexandria, VA 22313-1450
www.uspto.gov

JONES DAY
222 EAST 41ST ST.
NEW YORK, NY 10017

COPY MAILED

JAN 14 2005

OFFICE OF PETITIONS

In re Application of: Raymond A. Feith, et. al.	:	
Application No. 10/816,183	:	NOTICE
Filed: March 31, 2004	:	
Attorney Docket No. 11461-030-999 (CAM:8066)	:	

This is a notice regarding your request for acceptance of a fee deficiency submission under 37 CFR 1.28. On September 1, 1998, the Court of Appeals for the Federal Circuit held that 37 CFR 1.28(c) is the sole provision governing the time for correction of the erroneous payment of the issue fee as a small entity. **See DH Technology v. Synergystex International, Inc. 154 F.3d 1333, 47 USPQ2d 1865 (Fed. Cir. Sept. 1, 1998).**

The Office no longer investigates or rejects original or reissue applications under 37 CFR 1.56. **1098 Off. Gaz. Pat. Office 502 (January 3, 1989)**. Therefore, nothing in this Notice is intended to imply that an investigation was done.

There is no indication that the person signing the communication filed December 9, 2004, was ever given a power of attorney or authorization of agent to prosecute the above-identified application. However, in accordance with 37 CFR 1.34(a), the signature appearing on the petition shall constitute a representation to the United States Patent and Trademark Office that he/she is authorized to represent the particular party in whose behalf he/she acts. However, if petitioner desires to receive future correspondence regarding this application, the appropriate power of attorney or authorization of agent must be submitted. A courtesy copy of this decision is being mailed to petitioner. Nevertheless, all future correspondence regarding this application file will be directed solely to the address of record until otherwise instructed.

Your fee deficiency submission under 37 CFR 1.28 is hereby **ACCEPTED**.

This file is being referred to the Office of Initial Patent Examination for further processing.

Inquiries related to this communication should be directed to the undersigned at (571) 272-3226.

Andrea Smith
Petitions Examiner
Office of Petitions
Office of the Deputy Commissioner
for Patent Examination Policy

cc: Arne M. Olson
Olson & Hierl, Ltd.
20 North Wacker Drive - 36th Floor
Chicago, IL 60606

UNITED STATES PATENT AND TRADEMARK OFFICE

Commissioner for Patents
United States Patent and Trademark Office
P.O. Box 1450
Alexandria, VA 22313-1450
www.uspto.gov

COPY MAILED

MAR 0 5 2008

OFFICE OF PETITIONS

FISH & RICHARDSON, P.C.
P.O. BOX 1022
MINNEAPOLIS, MN 55402-1022

In re Application of :
Hiroko ABE, et al :
Application No. 10/816,185 : DECISION ON PETITION
Filed: April 2, 2004 : TO WITHDRAW
Attorney Docket No. 12732-222001/US7082 : FROM RECORD

This is a decision on the Request to Withdraw as attorney or agent under 37 C.F.R. § 1.36(b) or 37 C.F.R. § 10.40 filed November 14, 2007.

The request is **APPROVED**.

A review of the file record indicates that Babak Akhlaghi: (1) does not have power of attorney in this patent application; and (2) has been employed or otherwise engaged in the proceedings in this patent application. In view of the present decision, Babak Akhlaghi has been withdrawn from the present application and may not prepare or submit papers under 37 C.F.R. § 1.34, or correspond in any manner in this application unless appointed in an acceptable power of attorney under 37 C.F.R. § 1.32(b).

All future communications from the Office will continue to be directed to the address above until otherwise properly notified by the applicant.

There are no outstanding Office actions pending at the present time.

Telephone inquires concerning this decision should be directed to the undersigned at 571-272-6735.

Diane Goodwyn
Petitions Examiner
Office of Petitions

OIPE JC104
FEB 07 2005
PATENT & TRADEMARK OFFICE

IFW

PATENT

IN THE UNITED STATES PATENT AND TRADEMARK OFFICE

Appl. No.	:	10/816,193	Confirmation No. 7523
Applicant(s)	:	Nicholas Gerald GREY	
Filed	:	April 2, 2004	
TC/A.U.	:	1744	
Examiner	:	Laura C. Cole	
Title	:	SURFACE CLEANING APPARATUS	
Docket No.	:	100103.52683US	

Commissioner for Patents
P.O. Box 1450
Alexandria, VA 22313-145

PETITION TO MAKE SPECIAL UNDER 37 CFR § 1.102(d)
ON THE BASIS OF ACTUAL INFRINGEMENT

Dear Sir:

Applicant requests that application 10/816,193 be examined on an expedited basis by way of grant of this Petition. This Petition is accompanied by a Preliminary Amendment, an Information Disclosure Statement, and the Petition fee under 37 § CFR 1.17(h). Applicant requests that the Petition fee be charged to Deposit Account No. 19-2112.

This request is based on actual infringement. Further to that regard, the undersigned states as follows:

1. It is believed that there is an infringing device or product actually on the market or method in use. A copy of the instruction booklet from the actually infringing device is attached to this Petition.

2. A rigid comparison of the device believed to be infringing the claims of this application has been made against the claims, and in the opinion of the undersigned, at least some of the claims of this application are unquestionably infringed.

03/09/2005 HSMITH1 00000003 192112 10816193

PETITION GRANTED

BEST AVAILABLE COPY

01 FC:1464 130.00 DA

119644v1

William Krynski
Special Program Examiner
TC 1700

MAR 23 2005

UNITED STATES PATENT AND TRADEMARK OFFICE

Commissioner for Patents
United States Patent and Trademark Office
P.O. Box 1450
Alexandria, VA 22313-1450
www.uspto.gov

TOWNSEND AND TOWNSEND AND CREW, LLP
TWO EMBARCADERO CENTER
EIGHTH FLOOR
SAN FRANCISCO CA 94111-3834

COPY MAILED

APR 18 2007

OFFICE OF PETITIONS

In re Application of	:	
Charles S. Desilets et al.	:	
Application No. 10/816,197	:	DECISION GRANTING PETITION
Filed: March 31, 2004	:	UNDER 37 CFR 1.313(c)(2)
Attorney Docket No. 021356-000320US	:	

This is a decision on the petition under 37 CFR 1.313(c)(2), filed April 16, 2007, to withdraw the above-identified application from issue after payment of the issue fee.

The petition is **GRANTED**.

The above-identified application is withdrawn from issue for consideration of a submission under 37 CFR 1.114 (request for continued examination). *See* 37 CFR 1.313(c)(2).

Petitioner is advised that the issue fee paid on May 26, 2006 cannot be refunded. If, however, this application is again allowed, petitioner may request that it be applied towards the issue fee required by the new Notice of Allowance.[1]

Telephone inquiries should be directed to Terri Williams at (571) 272-2991.

This application is being referred to Technology Center AU 3737 for processing of the request for continued examination under 37 CFR 1.114 and for consideration of the concurrently filed Amendment.

Frances Hicks
Petitions Examiner
Office of Petitions

---

[1] *The request to apply the issue fee to the new Notice may be satisfied by completing and returning the new Part B – Fee(s) Transmittal Form (along with any balance due at the time of submission). Petitioner is advised that the Issue Fee Transmittal Form must be completed and timely submitted to avoid abandonment of the application.*

UNITED STATES PATENT AND TRADEMARK OFFICE

COMMISSIONER FOR PATENTS
UNITED STATES PATENT AND TRADEMARK OFFICE
P.O. BOX 1450
ALEXANDRIA, VA 22313-1450
www.uspto.gov

MAR 14 2005

In re Application of	:	
Terrance W. Sutherland et al.	:	
Serial No. 10/816,208	:	DECISION ON PETITION
Filed: April 2, 2004	:	TO MAKE SPECIAL
For: TUBULAR BASEBALL AT WITH	:	
FULL LENGTH CORE SHAFTS	:	

Applicant's petition, filed December 15, 2004, requests that this application be rendered special for examination in that applicant is over sixty-five (65) years of age.

The petition has been reviewed and is found to be in compliance with the requirements for special status as set forth in Section 708.02(IV) of the Manual of Patent Examining Procedure (MPEP).

PETITION GRANTED.

E. R. Kazenske, Director
Technology Center 3700

David J. French
P.O. Box 2486, Stn. D
Ottawa, Canada, L1P 5W6

UNITED STATES PATENT AND TRADEMARK OFFICE

Commissioner for Patents
United States Patent and Trademark Office
P.O. Box 1450
Alexandria, VA 22313-1450
www.uspto.gov

K. BRIAN BATHURST
CARR & FERRELL LLP
2200 GENG ROAD
PALO ALTO CA 94303

COPY MAILED
APR 12 2006
OFFICE OF PETITIONS

In re Application of
NICHOLAS A. J. MILLINGTON
Application No. 10/816,217
Filed: April 1, 2004
Attorney Docket No. PA3445US

DECISION ON PETITION
UNDER 37 CFR 1.137(b)

This is a decision on the petition filed November 21, 2005 under 37 CFR 1.137(b) to revive the above-identified application.

The petition is **GRANTED**.

The application became abandoned for failure to reply in a timely manner to the Notice to File Missing Parts of Nonprovisional Application (Notice) mailed June 18, 2004. The Notice set a period for reply of two (2) months from the mail date of the Notice. No extensions of time under the provisions of 37 CFR 1.136(a) were obtained. Accordingly, the application became abandoned on August 19, 2004.

The petition satisfies the conditions for revival pursuant to the provisions of 37 CFR 1.137(b) in that (1) the reply in the form of additional fees set forth in the Notice; (2) the petition fee of $750; and (3) an adequate statement of unintentional delay have been received. Accordingly, the response to the Notice of Missing Parts is accepted as having been unintentionally delayed.

Telephone inquiries concerning this decision should be directed to Amelia Au at (571) 272-7414.

The application file is being referred to the Office of Initial Patent Examination.

Amelia Au
Petitions Examiner
Office of Petitions

UNITED STATES PATENT AND TRADEMARK OFFICE

Commissioner for Patents
United States Patent and Trademark Office
P.O. Box 1450
Alexandria, VA 22313-1450
www.uspto.gov

MAILED

JUN 23 2007

Technology Center 2100

CARR & FERRELL LLP
2200 GENG ROAD
PALO ALTO CA 94303

In re Application of:
Nicholas MILLINGTON
Application No. 10/816,217
Filed: April 01, 2004
For:

SYSTEM AND METHOD FOR SYNCHRONIZING OPERATIONS AMONG A PLURALITY OF INDEPENDENTLY CLOCKED DIGITAL DATA PROCESSING DEVICES

DECISION ON PETITION TO MAKE SPECIAL

This is a decision on the petitions, filed on 24 August 2006, under 37 C.F.R. §102(d) and M.P.E.P. § 708.02(VIII): Accelerated Examination, to make the above-identified application special.

The petition is **GRANTED**.

M.P.E.P. § 708.02, Section VIII which sets out the prerequisites for a grantable petition for Accelerated Examination under 37 C.F.R. § 102(d) states in relevant part:

> A new application (one which has not received any examination by the examiner) may be granted special status provided that applicant (and this term includes applicant's attorney or agent) complies with each of the following items:
>
> (A) Submits a petition to make special accompanied by the fee set forth in 37 CFR 1.17(h);
>
> (B) Presents all claims directed to a single invention, or if the Office determines that all the claims presented are not obviously directed to a single invention, will make an election without traverse as a prerequisite to the grant of special status;
>
> (C) Submits a statement(s) that a pre-examination search was made, listing the field of search by class and subclass, publication, Chemical Abstracts, foreign patents, etc. A search made by a foreign patent office satisfies this requirement;
>
> (D) Submits one copy each of the references deemed most closely related to the subject matter encompassed by the claims if said references are not already of record; and

(E) Submits a detailed discussion of the references, which discussion points out, with the particularity required by 37 CFR 1.111 (b) and (c), how the claimed subject matter is patentable over the references.

Applicant's submissions of 24 August 2006 meets all the criteria set out above. Accordingly, the petition is **GRANTED**. The application file is being forwarded to the Examiner for accelerated examination in accordance with M.P.E.P. § 708.02. If the application is subsequently allowed, it will be given priority for printing. See M.P.E.P. § 1309.

John Follansbee QAS
Technology Center 2100
571-272-3964

UNITED STATES PATENT AND TRADEMARK OFFICE

COMMISSIONER FOR PATENTS
UNITED STATES PATENT AND TRADEMARK OFFICE
P.O. BOX 1450
ALEXANDRIA, VA 22313-1450
www.uspto.gov

COPY MAILED

MAR 29 2006

OFFICE OF PETITIONS

SINSHEIMER, SCHIEBELHUT, BAGGETT
1010 PEACH STREET
SAN LUIS OBISPO, CA 93401

In re Application of	:	
Julio C. Chaves, et al.	:	
Application No. 10/816,228	:	DECISION ON PETITIONS
Filed: March 31, 2004	:	UNDER 37 CFR 1.78(a)(3)
Attorney Docket No. 3084.028	:	AND UNDER 37 CFR 1.78(a)(6)

This is a decision on the petition under 37 CFR §§ 1.78(a)(3) and 1.78(a)(6), filed July 27, 2005, to accept an unintentionally delayed claim under 35 U.S.C. §§120 and 119(e) for the benefit of the prior-filed applications set forth in the concurrently filed amendment.

The petition is **DISMISSED**.

A petition for acceptance of a claim for late priority under 37 CFR §§ 1.78(a)(3) and 1.78(a)(6) is only applicable to those applications filed on or after November 29, 2000. Further, the petition is appropriate only after the expiration of the period specified in 37 CFR §§ 1.78(a)(2)(ii) and 1.78(a)(5)(ii). In addition, the petition under 37 CFR §§ 1.78(a)(3) and 1.78(a)(6) must be accompanied by:

(1) the reference required by 35 U.S.C. §§ 120 and 119(e) and 37 CFR §§ 1.78(a)(2)(i) and 1.78(a)(5)(i) of the prior-filed application, unless previously submitted;

(2) the surcharge set forth in § 1.17(t); and

(3) a statement that the entire delay between the date the claim was due under 37 CFR §§ 1.78(a)(2)(ii) and 1.78(a)(5)(ii) and the date the claim was filed was unintentional. The Commissioner may require additional where there is a question whether the delay was unintentional.

The petition fails to comply with item (1) above.

A reference to add the prior-filed applications on page one following the first sentence of the specification has been included in an amendment filed on July 27, 2005. However, the amendment is not acceptable as drafted since it improperly incorporates by reference prior-filed Application No. 10/814,598. Petitioner's attention is directed to Dart Industries v. Banner, 636 F.2d 684, 207 USPQ 273 (C.A.D.C. 1980), where the court drew a distinction between a permissible 35 U.S.C. § 120 statement and the impermissible introduction of new matter by way of incorporation by reference in a 35 U.S.C. § 120 statement. The court specifically stated:

> Section 120 merely provides a mechanism whereby an application becomes entitled to benefit of the filing date of an earlier application disclosing the same subject matter. Common subject matter must be disclosed, in both applications, either specifically or by an express incorporation-by-reference of prior disclosed subject matter. Nothing in section 120 itself operates to carry forward any disclosure from an earlier application. In re deSeversky, supra at 674, 177 USPQ at 146-147. Section 120 contains no magical disclosure-augmenting powers able to pierce new matter barriers. It cannot, therefore, "limit" the absolute and express prohibition against new matter contained in section 251.

In order for the incorporation by reference statement to be effective as a proper safeguard against the omission of a portion of a prior application, the incorporation by reference statement must be included in the specification-as-filed, or in an amendment specifically referred to in an oath or declaration executing the application. *See* In re deSeversky, *supra*. *Note also* MPEP 201.06(c).

Accordingly, before the petition under 37 CFR §§ 1.78(a)(3) and 1.78(a)(6) can be granted, a renewed petition under 37 CFR §§ 1.78(a)(3) and 1.78(a)(6) and an amendment[1] deleting the improper incorporation by reference statement to nonprovisional application No. 10/814,598 is required.

Further correspondence with respect to this matter should be addressed as follows:

By mail: Mail Stop PETITION
Commissioner for Patents
Post Office Box 1450
Alexandria, VA 22313-1450

By hand: U.S. Patent and Trademark Office
Customer Service Window, Mail Stop PETITION
Randolph Building
401 Dulany Street
Alexandria, VA 22314

The centralized facsimile number is **(571) 273-8300**.

Any questions concerning this matter may be directed to Sherry Brinkley at (571) 272-3204.

Sherry D. Brinkley
Petitions Examiner
Office of Petitions
Office of the Deputy Commissioner
for Patent Examination Policy

Frances M. Hicks
Lead, Petitions Examiner
Office of Petitions
Office of the Deputy Commissioner
for Patent Examination Policy

[1] *Note* 37 CFR 1.121

UNITED STATES PATENT AND TRADEMARK OFFICE

Commissioner for Patents
United States Patent and Trademark Office
P.O. Box 1450
Alexandria, VA 22313-1450
www.uspto.gov

SINSHEIMER JUHNKE LEBENS & MCIVOR, LLP
1010 PEACH STREET
P.O. BOX 31
SAN LUIS OBISPO CA 93406

COPY MAILED

NOV 29 2006

OFFICE OF PETITIONS

In re Application of	:	
Julio C. Chaves, et al.	:	
Application No. 10/816,228	:	DECISION ON PETITIONS
Filed: March 31, 2004	:	UNDER 37 CFR 1.78(a)(3)
Attorney Docket No. 3084.028	:	AND UNDER 37 CFR 1.78(a)(6)

This is a decision on the renewed petition under 37 CFR §§ 1.78(a)(3) and 1.78(a)(6), filed July 20, 2006, to accept an unintentionally delayed claim under 35 U.S.C. §§120 and 119(e) for the benefit of the prior-filed applications set forth in the concurrently filed amendment.

The petitions is **GRANTED**.

A petition for acceptance of a claim for late priority under 37 CFR §§ 1.78(a)(3) and 1.78(a)(6) is only applicable to those applications filed on or after November 29, 2000. Further, the petition is appropriate only after the expiration of the period specified in 37 CFR §§ 1.78(a)(2)(ii) and 1.78(a)(5)(ii). In addition, the petition under 37 CFR §§ 1.78(a)(3) and 1.78(a)(6) must be accompanied by:

(1) the reference required by 35 U.S.C. §§ 120 and 119(e) and 37 CFR §§ 1.78(a)(2)(i) and 1.78(a)(5)(i) of the prior-filed application, unless previously submitted;

(2) the surcharge set forth in § 1.17(t); and

(3) a statement that the entire delay between the date the claim was due under 37 CFR §§ 1.78(a)(2)(ii) and 1.78(a)(5)(ii) and the date the claim was filed was unintentional. The Director may require additional where there is a question whether the delay was unintentional.

Additionally, the nonprovisional application must be pending at the time of filing of the reference to the prior-filed provisional application(s) as required by 37 CFR 1.78(a)(5)(ii). Further, the nonprovisional application(s) claiming the benefit of the prior-filed provisional application(s) must have been filed within twelve months of the filing date of the prior-filed provisional application(s).

All of the above requirements having been satisfied, the late claim for benefit of priority to the prior-filed applications under 35 U.S.C. §§ 120 and 119(e) is accepted as being unintentionally delayed.

The granting of the petition to accept the delayed benefit claim to the prior-filed applications under 37 CFR §§ 1.78(a)(3) and 1.78(a)(6) should not be construed as meaning that this application is entitled to the benefit of the filing date of the prior-filed applications. In order for this application to be entitled to the benefit of the prior-filed applications, all other requirements under 35 U.S.C. §§120 and 1.78(a)(1) and (a)(2) and under 35 U.S.C. §119(e) and 37 CFR 1.78(a)(4) and (a)(5) must be met. Similarly, the fact that the corrected Filing Receipt accompanying this decision on petition includes the prior-filed applications should not be construed as meaning that applicant is entitled to the claim for benefit of priority to the prior-filed applications noted thereon. Accordingly, the examiner will, in due course, consider this benefit claim and determine whether the application is entitled to the benefit of the earlier filing date.

A corrected Filing Receipt, which includes the priority claim to the prior-filed applications, accompanies this decision on petition.

Any questions concerning this matter may be directed to Sherry Brinkley at (571) 272-3204. All other inquiries concerning either the examination procedures or status of the application should be directed to the Technology Center.

This application is being referred to Technology Center Art Unit 2875 for consideration by the examiner of the claim for benefit of priority under 35 U.S.C. § §120 and 119(e) to the prior-filed nonprovisional and provisional applications.

Sherry D. Brinkley
Petitions Examiner
Office of Petitions

Frances M. Hicks
Lead, Petitions Examiner
Office of Petitions

ATTACHMENT : Corrected Filing Receipt

UNITED STATES PATENT AND TRADEMARK OFFICE

UNITED STATES DEPARTMENT OF COMMERCE
United States Patent and Trademark Office
Address: COMMISSIONER FOR PATENTS
P.O. Box 1450
Alexandria, Virginia 22313-1450
www.uspto.gov

APPL NO.	FILING OR 371 (c) DATE	ART UNIT	FIL FEE REC'D	ATTY.DOCKET NO	DRAWINGS	TOT CLMS	IND CLMS
10/816,228	03/31/2004	2875	990	3084.028	30	25	3

CONFIRMATION NO. 7326
CORRECTED FILING RECEIPT
OC000000021323003
OC000000021323003

26375
SINSHEIMER JUHNKE LEBENS & MCIVOR, LLP
1010 PEACH STREET
P.O. BOX 31
SAN LUIS OBISPO, CA 93406

Date Mailed: 11/22/2006

Receipt is acknowledged of this regular Patent Application. It will be considered in its order and you will be notified as to the results of the examination. Be sure to provide the U.S. APPLICATION NUMBER, FILING DATE, NAME OF APPLICANT, and TITLE OF INVENTION when inquiring about this application. Fees transmitted by check or draft are subject to collection. Please verify the accuracy of the data presented on this receipt. **If an error is noted on this Filing Receipt, please mail to the Commissioner for Patents P.O. Box 1450 Alexandria Va 22313-1450. Please provide a copy of this Filing Receipt with the changes noted thereon. If you received a "Notice to File Missing Parts" for this application, please submit any corrections to this Filing Receipt with your reply to the Notice. When the USPTO processes the reply to the Notice, the USPTO will generate another Filing Receipt incorporating the requested corrections (if appropriate).**

Applicant(s)

Julio Cesar Chaves, Madrid, SPAIN;
Juan Carlos Minano, Madrid, SPAIN;
Pablo Benitez, Madrid, SPAIN;
William A. Parkyn JR., Lomita, CA;
Waqidi Falicoff, Newport Beach, CA;
Fernando Munoz, Madrid, SPAIN;
Yupin Sun, Yorba Linda, CA;

Assignment For Published Patent Application

Light Prescriptions Innovators, LLC, Irvine, CA

Power of Attorney: The patent practitioners associated with Customer Number **26375**.

Domestic Priority data as claimed by applicant

This application is a CIP of 10/814,598 03/30/2004 ABN
which claims benefit of 60/470,691 05/13/2003
and claims benefit of 60/520,951 11/17/2003
This application 10/816,228
is a CIP of 10/461,557 06/12/2003 PAT 7,021,797
which claims benefit of 60/470,691 05/13/2003

Foreign Applications

If Required, Foreign Filing License Granted: 06/11/2004

The country code and number of your priority application, to be used for filing abroad under the Paris Convention, is
US10/816,228

Projected Publication Date: Not Applicable

Non-Publication Request: No

Early Publication Request: No

Title

Optical device for LED-based lamp

Preliminary Class

362

PROTECTING YOUR INVENTION OUTSIDE THE UNITED STATES

Since the rights granted by a U.S. patent extend only throughout the territory of the United States and have no effect in a foreign country, an inventor who wishes patent protection in another country must apply for a patent in a specific country or in regional patent offices. Applicants may wish to consider the filing of an international application under the Patent Cooperation Treaty (PCT). An international (PCT) application generally has the same effect as a regular national patent application in each PCT-member country. The PCT process **simplifies** the filing of patent applications on the same invention in member countries, but **does not result** in a grant of "an international patent" and does not eliminate the need of applicants to file additional documents and fees in countries where patent protection is desired.

Almost every country has its own patent law, and a person desiring a patent in a particular country must make an application for patent in that country in accordance with its particular laws. Since the laws of many countries differ in various respects from the patent law of the United States, applicants are advised to seek guidance from specific foreign countries to ensure that patent rights are not lost prematurely.

Applicants also are advised that in the case of inventions made in the United States, the Director of the USPTO must issue a license before applicants can apply for a patent in a foreign country. The filing of a U.S. patent application serves as a request for a foreign filing license. The application's filing receipt contains further information and guidance as to the status of applicant's license for foreign filing.

Applicants may wish to consult the USPTO booklet, "General Information Concerning Patents" (specifically, the section entitled "Treaties and Foreign Patents") for more information on timeframes and deadlines for filing foreign patent applications. The guide is available either by contacting the USPTO Contact Center at 800-786-9199, or it can be viewed on the USPTO website at http://www.uspto.gov/web/offices/pac/doc/general/index.html.

For information on preventing theft of your intellectual property (patents, trademarks and copyrights), you may wish to consult the U.S. Government website, http://www.stopfakes.gov. Part of a Department of Commerce initiative, this website includes self-help "toolkits" giving innovators guidance on how to protect intellectual property in specific countries such as China, Korea and Mexico. For questions regarding patent enforcement issues, applicants may call the U.S. Government hotline at 1-866-999-HALT (1-866-999-4158).

LICENSE FOR FOREIGN FILING UNDER
Title 35, United States Code, Section 184
Title 37, Code of Federal Regulations, 5.11 & 5.15

GRANTED

The applicant has been granted a license under 35 U.S.C. 184, if the phrase "IF REQUIRED, FOREIGN FILING LICENSE GRANTED" followed by a date appears on this form. Such licenses are issued in all applications where the conditions for issuance of a license have been met, regardless of whether or not a license may be required as set forth in 37 CFR 5.15. The scope and limitations of this license are set forth in 37 CFR 5.15(a) unless an earlier license has been issued under 37 CFR 5.15

(b). The license is subject to revocation upon written notification. The date indicated is the effective date of the license, unless an earlier license of similar scope has been granted under 37 CFR 5.13 or 5.14.

This license is to be retained by the licensee and may be used at any time on or after the effective date thereof unless it is revoked. This license is automatically transferred to any related applications(s) filed under 37 CFR 1.53(d). This license is not retroactive.

The grant of a license does not in any way lessen the responsibility of a licensee for the security of the subject matter as imposed by any Government contract or the provisions of existing laws relating to espionage and the national security or the export of technical data. Licensees should apprise themselves of current regulations especially with respect to certain countries, of other agencies, particularly the Office of Defense Trade Controls, Department of State (with respect to Arms, Munitions and Implements of War (22 CFR 121-128)); the Bureau of Industry and Security, Department of Commerce (15 CFR parts 730-774); the Office of Foreign Assets Control, Department of Treasury (31 CFR Parts 500+) and the Department of Energy.

NOT GRANTED

No license under 35 U.S.C. 184 has been granted at this time, if the phrase "IF REQUIRED, FOREIGN FILING LICENSE GRANTED" DOES NOT appear on this form. Applicant may still petition for a license under 37 CFR 5.12, if a license is desired before the expiration of 6 months from the filing date of the application. If 6 months has lapsed from the filing date of this application and the licensee has not received any indication of a secrecy order under 35 U.S.C. 181, the licensee may foreign file the application pursuant to 37 CFR 5.15(b).

UNITED STATES PATENT AND TRADEMARK OFFICE

UNITED STATES DEPARTMENT OF COMMERCE
United States Patent and Trademark Office
Address: COMMISSIONER FOR PATENTS
P.O. Box 1450
Alexandria, Virginia 22313-1450
www.uspto.gov

INTEL/BSTZ
BLAKELY SOKOLOFF TAYLOR & ZAFMAN LLP
1279 OAKMEAD PARKWAY
SUNNYVALE, CA 94085-4040

Mail Date: 06/28/2010

Applicant	: Steven M. Bennett	: DECISION ON REQUEST FOR
Patent Number	: 7620949	: RECALCULATION of PATENT
Issue Date	: 11/17/2009	: TERM ADJUSTMENT IN VIEW
Application No	: 10/816,233	: OF WYETH AND NOTICE OF INTENT TO
Filed	: 03/31/2004	: ISSUE CERTIFICATE OF CORRECTION
		:

The Request for Recalculation is **GRANTED** to the extent indicated.

The patent term adjustment has been determined to be **1511** days. The USPTO will *sua sponte* issue a certificate of correction reflecting the amount of PTA days determined by the recalculation.

Prior to the issuance of the certificate of correction, the USPTO will afford patentee an opportunity to be heard and request reconsideration. Accordingly, patentee has **one month or thirty (30) days**, whichever is longer, to file a request for reconsideration of this patent term adjustment calculation. See 35 U.S.C. 154(b)(3)(B)(ii) and 37 CFR 1.322(a)(4). No extensions of time will be granted under 37 CFR 1.136.

Patentee should use document code PET.OP if electronically filing a request for reconsideration of this patent term adjustment calculation. The patentee must also include the information required by 37 CFR 1.705(b)(2) and the fee required by 37 CFR 1.18(e). If patentee does not file a timely request for reconsideration of this patent term adjustment calculation including the information required by 37 CFR 1.705(b)(2) and the fee required by 37 CFR 1.18(e), the USPTO will issue a certificate of correction reflecting the PTA determination noted above.

Patentee should be aware that in order to preserve the right to review in the United States District Court for the District of Columbia of the USPTO patent term adjustment determination, patentee must ensure that he or she also take the steps required under 35 U.S.C. 154(b)(4)(A) in a timely manner. Nothing in the request for recalculation should be construed as providing an alternative time frame for commencing a civil action under 35 U.S.C. 154(b)(4)(A).

Any questions concerning this decision should be directed to the Office of Patent Legal Administration at 571-272-7702.

UNITED STATES PATENT AND TRADEMARK OFFICE

Commissioner for Patents
United States Patent and Trademark Office
P.O. Box 1450
Alexandria, VA 22313-1450
www.uspto.gov

BAKER BOTTS LLP
2001 ROSS AVENUE
SUITE 600
DALLAS, TX 75201-2980

COPY MAILED
SEP 2 8 2006
OFFICE OF PETITIONS

In re Application of	:	
Stephen Alan Foxon	:	
Application No. 10/816,263	:	DECISION DISMISSING PETITION
Filed: March 31, 2004	:	UNDER 37 CFR 1.313(a)
Attorney Docket No. 072819.0157	:	

This is a decision on the petition under 37 CFR 1.313(a), filed September 26, 2006, requesting withdrawal of the above-identified application from issue.

The petition is **dismissed** as moot for the reasons stated below.

A review of the file record discloses that a Notice of Allowance was mailed on July 11, 2006, with the issue fee being due on or before October 11, 2006. There is no indication that the issue fee has been paid.

The filing of a petition under 37 CFR 1.313(a) is unnecessary, since the mere filing of an RCE and submission will effectively withdraw an application from issue prior to payment of the issue fee. In view thereof, the petition to withdraw from issue is dismissed as involving a moot issue. *Note* MPEP §§ 706.07(h)(IX) and 1308.

Inquiries concerning this decision may be directed to the undersigned at (571) 272-3218.

The matter is being referred to Technology Center AU 1771 for appropriate processing of the RCE filed September 26, 2006.

Frances Hicks
Petitions Examiner
Office of Petitions

UNITED STATES PATENT AND TRADEMARK OFFICE

Commissioner for Patents
United States Patent and Trademark Office
P.O. Box 1450
Alexandria, VA 22313-1450
www.uspto.gov

APPLICATION NUMBER	FILING/RECEIPT DATE	FIRST NAMED APPLICANT	ATTORNEY DOCKET NUMBER
10/816,272	04/02/2004	Deuk-Hwan Chang	46327

ROYLANCE, ABRAMS, BERDO & GOODMAN, L.L.P.
1300 19TH STREET, N.W.
SUITE 600
WASHINGTON, DC 20036

DATE MAILED: August 22, 2006

DECISION DISMISSING PETITION UNDER 37 CFR 1.138(d)
The declaration of express abandonment will not be recognized

This is in response to the petition under 37 CFR 1.138(d) filed on July 10, 2006, requesting for a refund of any previously paid search fee and excess claims fee in the above-identified application.

The petition is dismissed.

The express abandonment will **not** be recognized for the reason(s) indicated below:

~ 1. The petition was not filed in sufficient time to permit the appropriate officials to recognize the abandonment before an examination has been made of the application. See 37 CFR 1.138(d).

~ 2. The application is not an application filed under 35 U.S.C. 111(a) on or after December 8, 2004.

~ 3. The petition was not signed by a party authorized by 37 CFR 1.33(b)(1), (3) or (4).

Any inquiries concerning this decision should be directed to the Pre-Grant Publication Division at (703) 605-4283.

Barbara J. Debnam
Pre-Grant Publication Division

UNITED STATES PATENT AND TRADEMARK OFFICE

Commissioner for Patents
United States Patent and Trademark Office
P. O. Box 1450
Alexandria, VA 22313-1450
www.uspto.gov

GORDON E NELSON
PATENT ATTORNEY, PC
57 CENTRAL ST
PO BOX 782
ROWLEY, MA 01969

COPY MAILED

MAR 1 7 2005

OFFICE OF PETITIONS

In re Application of	:	
Raymond S. Burns et al	:	
Application No. 10/816,290	:	DECISION ON PETITION
Filed: April 1, 2004	:	UNDER 37 CFR 1.78(a)(6)
Attorney Docket No. burnsr01.002	:	

This is a decision on the petition under 37 CFR 1.78(a)(6), filed September 30, 2004, to accept an unintentionally delayed claim under 35 U.S.C. § 119(e) for the benefit of a prior-filed provisional application.

The petition is **DISMISSED**.

A petitioner under 37 CFR 1.78(a)(6) is only applicable to those applications filed on or after November 29, 2000. Further, the petition is appropriate only after expiration of the period specified in 37 CFR 1.78(a)(5)(ii) and must be filed during the pendency of the Nonprovisional application. In addition, the petition must be accompanied by:

(1) the reference required by 35 U.S.C. § 119(e) and 37 CFR 1.78(a)(5)(i) to the prior-filed application, unless previously submitted;
(2) the surcharge set forth in § 1.17(t); and
(3) a statement that the entire delay between the date the claim was due under 37 CFR 1.78(a)(5)(ii) and the date the claim was filed was unintentional. The Commissioner may require additional information where there is a question whether the delay was unintentional.

The amendment submitted concurrently with the instant petition as drafted is unacceptable and, therefore, is not considered a proper reference under 37 CFR 1.78(a)(2)(i). In this regard, the amendment is physically part of the instant petition and, as such, does not comply with 37 CFR 1.121, 1.52, or 1.4(c). Note that 37 CFR 1.121 states that amendments are made by filing a paper, in compliance with § 1.52, directing that specified amendments be made. The pertinent section of 37 CFR 1.52 states that the claim (in this case, the claim for priority), must commence on a separate physical sheet. 37 CFR 1.4(c) states that each distinct subject must be contained in

a separate paper since different matters may be considered by different branches of the United States Patent and Trademark Office.

In view of the above, the amendment to add a priority claim to the first line of the specification, which is physically embedded in the instant petition, is not acceptable. Accordingly, a substitute amendment in compliance with the aforementioned rules, along with a renewed petition under 37 CFR 1.78(a)(6), must be submitted.

Further correspondence with respect to this matter should be addressed as follows:

By mail	Mail Stop PETITIONS Commissioner for Patents Post Office Box 1450 Alexandria, VA 22313-1450
By hand:	Customer Service Window Randolph Building 401 Dulany Street Alexandria, VA 22314
By Fax:	(703) 872-9306 ATTN: Office of Petitions

Any question concerning this matter may be directed to Wan Laymon at (571) 272-3220.

Frances Hicks

Frances Hicks
Lead Petitions Examiner
Office of Petitions
Office of the Deputy Commissioner
for Patent Examination Policy

UNITED STATES PATENT AND TRADEMARK OFFICE

Commissioner for Patents
United States Patent and Trademark Office
P.O. Box 1450
Alexandria, VA 22313-1450
www.uspto.gov

GORDON E NELSON
PATENT ATTORNEY, PC
57 CENTRAL ST
PO BOX 782
ROWLEY, MA 01969

COPY MAILED

JUL 27 2005

OFFICE OF PETITIONS

In re Application of :
Raymond S. Burns et al :
Application No. 10/816,290 : DECISION ON PETITION
Filed: April 1, 2004 : UNDER 37 CFR 1.78(a)(6)
Attorney Docket No. burnsr01.002 :

This is a decision on the renewed petition under 37 CFR 1.78(a)(6), filed March 31, 2005, to accept an unintentionally delayed claim under 35 U.S.C. §119(e) for the benefit of the prior-filed provisional application set forth in the concurrently filed amendment.

The petition is **GRANTED**..

A petition under 37 CFR 1.78(a)(6) is only applicable to those applications filed on or after November 29, 2000. Further, the petition is appropriate only after expiration of the period specified in 37 CFR 1.78(a)(5)(ii) and must be filed during the pendency of the nonprovisional application. In addition, the petition must be accompanied by:

(1) the reference required by 35 U.S.C. § 119(e) and 37 CFR 1.78(a)(5)(i) to the prior-filed application, unless previously submitted;
(2) the surcharge set forth in § 1.17(t); and
(3) a statement that the entire delay between the date the claim was due under 37 CFR 1.78(a)(5)(ii) and the date the claim was filed was unintentional. The Commissioner may require additional information where there is a question whether the delay was unintentional.

The instant nonprovisional application was filed after November 29, 2000, and the claim herein for the benefit of priority to the prior-filed provisional application is submitted after expiration of the period specified in 37 CFR 1.78(a)(5)(ii). Therefore, this is a proper petition under 37 CFR 1.78(a)(6).

The petition complies with the requirements for a grantable petition under 37 CFR 1.78(a)(6) in that (1) a reference to the prior-filed provisional application has been included in an amendment to the first sentence of the specification following the title, as provided by 37 CFR 1.78(a)(5)(iii); (2) the surcharge fee required by 37 CFR 1.17(t) has been previously submitted; and (3) the petition contains a statement of unintentional delay. Accordingly, having found that the instant petition for acceptance of an unintentionally delayed claim for the benefit of priority under 35 U.S.C. § 119(e) to the prior-filed provisional application satisfies the conditions of 37 CFR 1.78(a)(6), the petition is granted.

37 CFR §§ 1.78(a)(3) and 1.78(a)(6) require a statement that the entire delay between the date the claim was due under 37 CFR §§ 1.78(a)(2)(ii) and 1.78(a)(5)(ii) and the date the claim was

filed was unintentional. Since the statement contained in the instant petition varies from the language required by 37 CFR 1.78(a)(6), the statement contained in the instant petition is being construed as the statement required by 37 CFR 1.78(a)(6).

The granting of the petition to accept the delayed benefit claim to the prior-filed application under 37 CFR 1.78(a)(6) should not be construed as meaning that the instant application is entitled to the benefit of the filing date of the prior-filed application. In order for the instant application to be entitled to the benefit of the prior-filed application, all other requirements under 35 U.S.C. §119(e) and 37 CFR 1.78(a)(4) and (a)(5) must be met. Similarly, the fact that the corrected Filing Receipt accompanying this decision on petition includes the prior-filed application should not be construed as meaning that applicants are entitled to the claim for benefit of priority to the prior-filed application noted thereon. Accordingly, the examiner will, in due course, consider this benefit claim and determine whether the instant application is entitled to the benefit of the earlier filing date.

A corrected Filing Receipt, which includes the priority claim to the prior-filed provisional application, accompanies this decision on petition.

Any inquiries concerning this decision may be directed to Wan Laymon at (571) 272-3220. All other inquiries concerning either the examination procedures or status of the application should be directed to the Technology Center.

This matter is being referred to Technology Center AU 2161 for appropriate action on the amendment submitted March 31, 2005, including consideration by the examiner of the claim under 35 U.S.C. §119(e) for the benefit of priority to prior-filed provisional Application No. 60/470,753.

Frances Hicks

Frances Hicks
Lead Petitions Examiner
Office of Petitions
Office of the Deputy Commissioner
for Patent Examination Policy

ATTACHMENT: Corrected Filing Receipt

UNITED STATES PATENT AND TRADEMARK OFFICE

Commissioner for Patents
United States Patent and Trademark Office
P.O. Box 1450
Alexandria, VA 22313-1450
www.uspto.gov

FINA TECHNOLOGY INC.
P. O. BOX 674412
HOUSTON, TX 77267-4412

COPY MAILED

AUG 1 5 2005

OFFICE OF PETITIONS

In re Application of	:	
Kelli E. Prince, et al.	:	
Application No. 10/816,297	:	ON PETITION
Filed: April 1, 2004	:	
Attorney Docket No. COS-799Div (API-1109-USD)	:	

This is a decision on the petition under 37 CFR 1.137(b), filed April 4, 2005, to revive the above-identified application.

The petition is **GRANTED.**

The above-identified application became abandoned for failure to reply in a timely manner to the Notice to File Missing Parts of Nonprovisional Application mailed June 17, 2004. The Notice set a period for reply of two (2) months from the mail date of the Notice. No extensions of time under the provisions of 37 CFR 1.136(a) were obtained. Accordingly, the above-identified application became abandoned on August 18, 2004.

Telephone inquiries concerning this decision should be directed to the undersigned at (571) 272-3229.

This application matter is being forwarded to the Office of Initial Patent Examination for further processing.

Retta Williams

Retta Williams
Petitions Examiner
Office of Petitions
Office of the Deputy Commissioner
for Patent Examination Policy

UNITED STATES PATENT AND TRADEMARK OFFICE

COMMISSIONER FOR PATENTS
UNITED STATES PATENT AND TRADEMARK OFFICE
P.O. BOX 1450
ALEXANDRIA, VA 22313-1450
www.uspto.gov

COPY MAILED

OCT 0 6 2006

OFFICE OF PETITIONS

KIMBERLY T. NGUYEN
OSI PHARAMACEUTICALS, INC.
41 PINELAWN RD
MELVILLE, NY 11747

In re Application of Arlindo L. Castelhano, et al. Application No. 10/816,329 Filed: March 31, 2004 Atty Docket No. 60390-AZ-PCT-US/JPW/GJG/J	: : : : :	ON PETITION

This is a decision in response to the petition, filed May 18, 2006, to revive the above-identified application under the provisions of 37 CFR 1.137(b).

The application became abandoned for a failure to reply in a timely manner to a non-final Office action mailed May 17, 2005. A Notice of Abandonment was mailed on March 17, 2006. In response, on May 18, 2006, the present petition was filed.

The petition is found to comply with the requirements of 37 CFR 1.137(b). Accordingly, the petition is **GRANTED**.

The application is being referred to Technology Center AU 1624 for consideration of the amendment filed May 18, 2006.

Telephone inquiries concerning this decision should be directed to the undersigned at (571) 272-3204. Inquiries relating to further prosecution should be directed to the Technology Center.

Sherry D. Brinkley
Petitions Examiner
Office of Petitions

UNITED STATES PATENT AND TRADEMARK OFFICE

COMMISSIONER FOR PATENTS
UNITED STATES PATENT AND TRADEMARK OFFICE
P.O. BOX 1450
ALEXANDRIA, VA 22313-1450
www.uspto.go

THOMAS, KAYDEN, HORSTEMEYER &
RISLEY, LLP
100 GALLERIA PARKWAY, N.W.
SUITE 750
ATLANTA. GA 30339-5948

MAIL

MAR 1 4 2005

DIRECTOR OFFICE
TECHNOLOGY CENTER 2600

In re application of: :
Petite, et al. :
Application No. 10/816,333 :
Filed: April 1, 2004 :
For: SYSTEM AND METHOD FOR SIGNALING A :
WEATHER ALERT CONDITION TO A :
RESIDENTIAL ENVIRONMENT

DECISION ON REQUEST TO
WITHDRAW FROM RECORD

This is a decision on the request for withdrawal as attorney/agent and change of correspondence address filed on October 15, 2004

A grantable request to withdraw as attorney/agent of record must:
(1) indicate the present mailing address of the attorney(s)/agent(s) who seek(s) to withdraw, and
(2) be signed by each attorney/agent seeking to withdraw or clearly be signed on their behalf, and
(3) be *approved* at least thirty (30) days prior to the maximum extendable period for response to any outstanding Office Action, and
(4) indicate the address to which future correspondence should be mailed.

Petitioner has satisfied the requirements for successfully requesting withdrawal. Accordingly, the request is **GRANTED.**

All of the attorneys/agents of record have been withdrawn.

All future communications from the Office will be directed to the address listed below until otherwise notified by applicant. Applicant is reminded of the obligation to promptly notify the Patent and Trademark Office of any change in correspondence address to ensure receipt of all communications from the Office.

Kenneth A. Wieder
Special Program Examiner
Technology Center 2600
Communications
(571) 272-2986

cc: Douglas D. Salyers, Esq.
Bank of America Plaza
600 Peachtree Street, N.E., Suite 5200
Atlanta, Georgia 30308-2216

UNITED STATES PATENT AND TRADEMARK OFFICE

UNITED STATES DEPARTMENT OF COMMERCE
United States Patent and Trademark Office
Address: COMMISSIONER FOR PATENTS
P.O. Box 1450
Alexandria, Virginia 22313-1450
www.uspto.gov

TEXAS INSTRUMENTS INCORPORATED
P O BOX 655474, M/S 3999
DALLAS, TX 75265

Mail Date: 04/22/2010

Applicant	: Krishnasamy Anandakumar	: DECISION ON REQUEST FOR
Patent Number	: 7606164	: RECALCULATION of PATENT
Issue Date	: 10/20/2009	: TERM ADJUSTMENT IN VIEW
Appliction No	: 10/816,351	: OF WYETH AND NOTICE OF INTENT TO
Filed	: 03/31/2004	: ISSUE CERTIFICATE OF CORRECTION
		:

The Request for Recalculation is **GRANTED** to the extent indicated.

The patent term adjustment has been determined to be **1091** days. The USPTO will *sua sponte* issue a certificate of correction reflecting the amount of PTA days determined by the recalculation.

Prior to the issuance of the certificate of correction, the USPTO will afford patentee an opportunity to be heard and request reconsideration. Accordingly, patentee has **one month or thirty (30) days**, whichever is longer, to file a request for reconsideration of this patent term adjustment calculation. See 35 U.S.C. 154(b)(3)(B)(ii) and 37 CFR 1.322(a)(4). No extensions of time will be granted under 37 CFR 1.136.

Patentee should use document code PET.OP if electronically filing a request for reconsideration of this patent term adjustment calculation. The patentee must also include the information required by 37 CFR 1.705(b)(2) and the fee required by 37 CFR 1.18(e). If patentee does not file a timely request for reconsideration of this patent term adjustment calculation including the information required by 37 CFR 1.705(b)(2) and the fee required by 37 CFR 1.18(e), the USPTO will issue a certificate of correction reflecting the PTA determination noted above.

Patentee should be aware that in order to preserve the right to review in the United States District Court for the District of Columbia of the USPTO patent term adjustment determination, patentee must ensure that he or she also take the steps required under 35 U.S.C. 154(b)(4)(A) in a timely manner. Nothing in the request for recalculation should be construed as providing an alternative time frame for commencing a civil action under 35 U.S.C. 154(b)(4)(A).

Any questions concerning this decision should be directed to the Office of Patent Legal Administration at 571-272-7702.

UNITED STATES PATENT AND TRADEMARK OFFICE

Commissioner for Patents
United States Patent and Trademark Office
P.O. Box 1450
Alexandria, VA 22313-1450
www.uspto.gov

DUANE MORRIS LLP
30 SOUTH 17TH STREET
PHILADELPHIA, PA 19103-4196

COPY MAILED
AUG 1 1 2006
OFFICE OF PETITIONS

In re Application of	:	
Ivan Pawlenko et al	:	
Application No. 10/816,354	:	ON PETITION
Filed: April 1, 2004	:	
Attorney Docket No. Y0242-00301	:	

This is a decision on the petition under 37 CFR 1.137(b), filed May 23, 2006, to revive the above-identified application.

The petition is **GRANTED.**

The above-identified application became abandoned for failure to submit the Issue fee in a timely manner in reply to the Notice of Allowance mailed December 5, 2005, which set a statutory period for reply of three (3) months. Accordingly, the above-identified application became abandoned on March 6, 2006.

The petition satisfies the conditions for revival pursuant to the provisions of 37 CFR 1.137(b) in that (1) the reply in the form of payment of the issue fee; (2) the petition fee; and (3) the required statement of unintentional delay have been received. Accordingly, the issue fee is accepted as having been unintentionally delayed.

Telephone inquiries concerning this decision should be directed to the undersigned at (571) 272-3210.

This matter is being referred to the Publishing Division for further processing.

Irvin Dingle
Petitions Examiner
Office of Petitions

UNITED STATES PATENT AND TRADEMARK OFFICE

UNITED STATES DEPARTMENT OF COMMERCE
United States Patent and Trademark Office
Address: COMMISSIONER FOR PATENTS
P.O. Box 1450
Alexandria, Virginia 22313-1450
www.uspto.gov

SHUMAKER & SIEFFERT, P.A
1625 RADIO DRIVE , SUITE 300
WOODBURY, MN 55125

Mail Date: 04/20/2010

Applicant	: Chung-Chieh Lee	: DECISION ON REQUEST FOR
Patent Number	: 7606154	: RECALCULATION of PATENT
Issue Date	: 10/20/2009	: TERM ADJUSTMENT IN VIEW
Appliction No	: 10/816,378	: OF WYETH AND NOTICE OF INTENT TO
Filed	: 04/01/2004	: ISSUE CERTIFICATE OF CORRECTION
		:

The Request for Recalculation is **GRANTED** to the extent indicated.

The patent term adjustment has been determined to be **1594** days. The USPTO will *sua sponte* issue a certificate of correction reflecting the amount of PTA days determined by the recalculation.

Prior to the issuance of the certificate of correction, the USPTO will afford patentee an opportunity to be heard and request reconsideration. Accordingly, patentee has **one month or thirty (30) days**, whichever is longer, to file a request for reconsideration of this patent term adjustment calculation. See 35 U.S.C. 154(b)(3)(B)(ii) and 37 CFR 1.322(a)(4). No extensions of time will be granted under 37 CFR 1.136.

Patentee should use document code PET.OP if electronically filing a request for reconsideration of this patent term adjustment calculation. The patentee must also include the information required by 37 CFR 1.705(b)(2) and the fee required by 37 CFR 1.18(e). If patentee does not file a timely request for reconsideration of this patent term adjustment calculation including the information required by 37 CFR 1.705(b)(2) and the fee required by 37 CFR 1.18(e), the USPTO will issue a certificate of correction reflecting the PTA determination noted above.

Patentee should be aware that in order to preserve the right to review in the United States District Court for the District of Columbia of the USPTO patent term adjustment determination, patentee must ensure that he or she also take the steps required under 35 U.S.C. 154(b)(4)(A) in a timely manner. Nothing in the request for recalculation should be construed as providing an alternative time frame for commencing a civil action under 35 U.S.C. 154(b)(4)(A).

Any questions concerning this decision should be directed to the Office of Patent Legal Administration at 571-272-7702.

UNITED STATES PATENT AND TRADEMARK OFFICE

COMMISSIONER FOR PATENTS
UNITED STATES PATENT AND TRADEMARK OFFICE
P.O. BOX 1450
ALEXANDRIA, VA 22313-1450
www.uspto.gov

BAKER BOTTS L.L.P.
2001 ROSS AVENUE
SUITE 600
DALLAS, TX 75201-2980

COPY MAILED

SEP 28 2006

OFFICE OF PETITIONS

In re Application of :
Stephen Alan Foxon :
Application No. 10/816,390 : ON PETITION
Filed: March 31, 2004 :
Attorney Docket No. 072819.0158 :

This is a decision on the petition under 37 CFR 1.313(c), filed September 26, 2006, requesting that the above-identified application be withdrawn from issue.

The petition is **DISMISSED AS MOOT**.

Petitioner requests that the application be withdrawn from issue for consideration of a request for continued examination (RCE) in compliance with 37 CFR 1.114, filed on September 26, 2006. Since the RCE is filed within the period set for paying the issue fee, as required by the Notice of Allowance and Issue Fee Due mailed July 11, 2006, prosecution is reopened in the present application. Consequently, no petition under 37 CFR 1.313 is necessary.

Telephone inquiries related to this decision should be directed to the undersigned at (571) 272-3204.

The application is being referred to Technology Center AU 1771 for further processing of the RCE under 37 CFR 1.114 filed September 26, 2006.

Sherry D. Brinkley
Petitions Examiner
Office of Petitions

UNITED STATES PATENT AND TRADEMARK OFFICE

UNITED STATES DEPARTMENT OF COMMERCE
United States Patent and Trademark Office
Address: COMMISSIONER FOR PATENTS
P.O. Box 1450
Alexandria, Virginia 22313-1450
www.uspto.gov

APPLICATION NO.	FILING DATE	FIRST NAMED INVENTOR	ATTORNEY DOCKET NO.	CONFIRMATION NO.
10/816,403	04/01/2004	Robin J. Guthrie	C-2480	9610

7590 03/23/2009

M. P. Williams
210 Main Street
Manchester, CT 06040

EXAMINER
WALKER, KEITH D

ART UNIT	PAPER NUMBER
1795	

MAIL DATE	DELIVERY MODE
03/23/2009	PAPER

Please find below and/or attached an Office communication concerning this application or proceeding.

The time period for reply, if any, is set in the attached communication.

UNITED STATES PATENT AND TRADEMARK OFFICE

Commissioner for Patents
United States Patent and Trademark Office
P.O. Box 1450
Alexandria, VA 22313-1450
www.uspto.gov

wk

3/23/09

In re application of
Guthrie
Serial No. 10/816,403
Filed: April 1, 2004
For: Fuel Cell Reactant Flow Fields That Maximize Platform Utilization

DECISION ON PETITION

This is a response to withdraw the abandonment of this application and is being considered as a PETITION UNDER RULE 37 C.F.R. 1.181(a) filed February 12, 2009. The petition requests that the abandonment, as set forth in the Notice of Abandonment mailed January 29, 2009, be withdrawn.

Petitioner asserts that an e-mail dated July 23, 2008 to SPE Ryan requesting a quality review of the final rejection was sent. Because of the SPE's extended absence, the e-mail was forwarded to SPE Tsang-Foster on August 18, 2008. SPE Tsang-Foster on August 20, 2008 in a phone call stated that the final rejection would be withdrawn. Petitioner on August 21, 2008 sent an e-mail to SPE Tsang-Foster confirming the phone call of August 20, 2008.

Petitioner now asserts that by sidestepping the requested review and offering instead a new office action, the status of the case shifted from a response due from applicant to an action due from the Office.

USPTO employees are NOT permitted to initiate communications with applicants via Internet e-mail unless there is a written authorization of record in the patent application by the applicant. (M P.E.P. 502.03). A review of the file does not indicate a written authorization of record in the patent application or an interview summary of the phone conversation of August 20, 2008.

The application is abandoned since a final rejection was mailed out on 7/16/08. The finality of the Office action must be withdrawn while the application is still pending. This is purely a question of practice, wholly distinct from the tenability of the rejection. 37 CFR 1.135(a) specifies that an application becomes abandoned if applicant "fails to reply" to an office action within the fixed statutory period. This failure may result either from (A) failure to reply within the statutory period, or (B) insufficiency of reply, i.e., failure to file a "complete and proper reply, as the condition of the case may require" within the statutory period (37 CFR 1.135(b)). Applicant is advised that the abandonment of this application may only be overcome by filing a petition to revive under 37 CFR 1.137. A petition to revive may be appropriate if applicant's failure to reply was either unavoidable or unintentional

DECISION

The Petition is **DISMISSED** as to the withdrawal of abandonment.

Gregory L. Mills, Acting Director
Technology Center 1700
Chemical and Materials Engineering

M. P. Williams
210 Main Street
Manchester CT 06040

UNITED STATES PATENT AND TRADEMARK OFFICE

Commissioner for Patents
United States Patent and Trademark Office
P.O. Box 1450
Alexandria, VA 22313-1450
www.uspto.gov

COPY MAILED

APR 21 2009

OFFICE OF PETITIONS

M. P. Williams
210 Main Street
Manchester, CT 06040

In re Application of	:	
Robin J. Guthrie	:	
Application No. 10/816,403	:	ON PETITION
Filed: April 1, 2004	:	
Attorney Docket No. C-2480	:	

This is a decision on the petition under the unintentional provisions of 37 CFR 1.137(b), filed April 3, 2009, to revive the above-identified application.

The petition is **GRANTED**.

The application became abandoned for failure to reply in a timely manner to the final Office action mailed, July 16, 2008, which set a shortened statutory period for reply of three (3) months. No extensions of time under the provisions of 37 CFR 1.136(a) were obtained. Accordingly, the application became abandoned on October 17, 2008. A Notice of Abandonment was mailed on January 29, 2009.

The petition satisfies the requirements of 37 CFR 1.137(b) in that petitioner has supplied (1) the reply in the form of a Notice of Appeal, with the required fee of $540, (2) the petition fee of $1620, and (3) a proper statement of unintentional delay. Accordingly, the Notice of Appeal is accepted as being unintentionally delayed.

The two-month period for filing an appeal brief under 37 CFR 41.37 (accompanied by the fee required by 37 CFR 41.20(b)(2)), runs from the date of this decision.

Telephone inquiries concerning this decision should be directed to Kimberly Inabinet at (571) 272-4618.

This application is being referred to Technology Center AU 1795 for processing of the response and any action that is required by the Examiner in the normal course of business.

Carl Friedman
Petitions Examiner
Office of Petitions

UNITED STATES PATENT AND TRADEMARK OFFICE

Commissioner for Patents
United States Patent and Trademark Office
P.O. Box 1450
Alexandria, VA 22313-1450
www.uspto.gov

Mrs. Shirley B. Koffroth
1342 Jaguar Court
Palmdale CA 93551

MAILED JUL 07 2006

In re Application of: KOFFROTH :
Appl. No.: 10/816,420 : DECISION ON PETITION
Filed: April 1, 2004 :
For: ICE BELT TO REDUCE BODY TEMPERATURE :

This is a decision on the petition filed October 11, 2005 by which petitioners request reconsideration of and withdrawal of the final rejection issued August 11, 2005, and admission of the new claim amendments included with the petition. The petition is considered pursuant to 37 CFR 1.181, and no fee is required.

The petition is dismissed.

Review of the application and of the prosecution history shows that the application was filed on April 1, 2004. At filing, the application contained claims 1 and 2. On March 11, 2005 the examiner promulgated a first office action rejecting claims 1 and 2 based upon 35 USC 102 and 35 USC 103 in view of the Plewes reference. On April 22, 2005, petitioner responded to the first office action with the submission of arguments against the applied rejection. No claim amendments were submitted. On June 24, 2004, petitioner submitted a supplemental response which included claim amendments including the addition of new claims. On August 11, 2005 the examiner promulgated a final office action again action rejecting claims 1 and 2 based upon 35 USC 102 and 35 USC 103 in view of the Plewes reference. In the final office action the examiner noted the June 24, 2005 supplemental amendment did not meet the requirements of 37 CFR 1.111 and had not been entered. Petitioner now requests the finality of the office action be withdrawn and the entry of additional claims and claim amendments.

Petitioner fails to set forth any basis for granting petitioner's request. While the petition opines that petitioner's papers had been mishandled, such does not provide basis for the removal of a final rejection. Entry of supplemental amendments is guided by 37 CFR 1.111 which states (in pertinent part):

> § 1.111 Reply by applicant or patent owner to a non-final Office action.
> (a)
> (1) If the Office action after the first examination (§ 1.104) is adverse in any respect, the applicant or patent owner, if he or she persists in his or her application for a patent or reexamination proceeding, must reply and request reconsideration or further examination, with or without amendment. See §§1.135 and 1.136 for time for reply to avoid abandonment.
> (2) Supplemental replies . (i) A reply that is supplemental to a reply that is in compliance with § 1.111(b) will not be entered as a matter of right except as provided in paragraph (a)(2)(ii) of this section. The Office may enter a supplemental reply if the supplemental reply is clearly limited to:
> (A) Cancellation of a claim(s);
> (B) Adoption of the examiner suggestion(s);
> (C) Placement of the application in condition for allowance;

(D) Reply to an Office requirement made after the first reply was filed;
(E) Correction of informalities (e.g., typographical errors); or
(F) Simplification of issues for appeal.
(ii) A supplemental reply will be entered if the supplemental reply is filed within the period during which action by the Office is suspended under § 1.103(a) or (c).
(b) In order to be entitled to reconsideration or further examination, the applicant or patent owner must reply to the Office action. The reply by the applicant or patent owner must be reduced to a writing which distinctly and specifically points out the supposed errors in the examiner's action and must reply to every ground of objection and rejection in the prior Office action. The reply must present arguments pointing out the specific distinctions believed to render the claims, including any newly presented claims, patentable over any applied references. If the reply is with respect to an application, a request may be made that objections or requirements as to form not necessary to further consideration of the claims be held in abeyance until allowable subject matter is indicated. The applicant's or patent owner's reply must appear throughout to be a bona fide attempt to advance the application or the reexamination proceeding to final action. A general allegation that the claims define a patentable invention without specifically pointing out how the language of the claims patentably distinguishes them from the references does not comply with the requirements of this section.
...
[46 FR 29182, May 29, 1981; para. (b) revised, 62 FR 53131, Oct. 10, 1997, effective Dec. 1, 1997; paras. (a) and (c) revised, 65 FR 54604, Sept. 8, 2000, effective Nov. 7, 2000; para. (a)(2) revised, 68 FR 14332, Mar. 25, 2003, effective May 1, 2003; para. (a)(2) revised, 69 FR 56481, Sept. 21, 2004, effective Oct. 21, 2004; para. (a)(2)(i) revised, 70 FR 3880, Jan. 27, 2005, effective Dec. 8. 004]

As correctly noted by the examiner, petitioner's supplemental amendment failed to meet the requirements of 37 CFR 1.111. Denial of entry by the examiner does not appear inappropriate.

Final rejection practice is described in MPEP 706.07. Under present practice, second or any subsequent actions on the merits shall be final, except where the examiner introduces a new ground of rejection that is neither necessitated by applicant's amendment of the claims nor based on information submitted in an information disclosure statement filed during the period set forth in 37 CFR 1.97(c) with the fee set forth in 37 CFR 1.17(p). In the present application, the examiner applied the same grounds of rejection and responded in full to all of petitioners presented arguments. Thus, issuance of the rejection as a final office action appears appropriate.

For at least the above reasons, the examiner was in compliance with proper examining practice as set forth in 37 CFR 1.111 and MPEP 706.07(a) in denying entry of the supplemental amendment and making the next Office action final. The examiner did not abuse his discretion, nor act in an arbitrary of capricious manner. Therefore, there appears to be no basis for granting the relief requested. Petitioner may file a request for reconsideration of this decision, without fee, if filed within two months of the date of this decision. See 37 CFR 1.181(f).

As a procedural note, petitioner should familiarize with 37 CFR 1.121 which describes the manner of making amendments in patent applications. It is noted that both the non-entered July 24, 2005 amendment as well as the amendment submitted with the instant petition failed to pass muster as to form of presentation. The claim amendments submitted October 11, 2005 will be treated as an after-final submission. Entry of claims after final is not a matter of right and is guided by 37 CFR 1.116. The application is being forwarded to the examiner of record for consideration of the amendment and issuance of an Advisory Action.

Further, noting 37 CFR 1.181 (f)

The mere filing of a petition will not stay any period for reply that may be running against the application, nor act as a stay of other proceedings.

Since the filing of a petition cannot be considered as a reply to the final rejection and no other action appears to have been taken by petitioner, the application appears to be abandoned.

Inquires regarding this petition decision may be directed to J. Harrison, TC 3700 Special Programs examiner at 571-272-4449.

PETITION DISMISSED

Frederick R. Schmidt, Director
Technology Center 3700

UNITED STATES PATENT AND TRADEMARK OFFICE

Commissioner for Patents
United States Patent and Trademark Office
P.O. Box 1450
Alexandria, VA 22313-1450
www.uspto.gov

MINTZ, LEVIN, COHN, FERRIS,
GLOVSKY & POPEO, P.C.
ONE FINANCIAL CENTER
BOSTON MA 02111

COPY MAILED
FEB 05 2010

In re Application of	:	
HOFFMANN et al.	:	
Application No. 10/816,445	:	ON APPLICATION FOR
Filed: March 31, 2004	:	PATENT TERM ADJUSTMENT
Atty. Docket No. 34874-096 UTIL	:	

This is in response to the REQUEST FOR RECONSIDERATION OF PATENT TERM ADJUSTMENT UNDER 37 C.F.R. 1.705(b) filed December 14, 2009. Applicants submit that the correct patent term adjustment to be indicated on the patent is one thousand one hundred forty-two (1,142) days, not eight hundred thirty-four (834) days as calculated by the Office as of the mailing of the initial determination of patent term adjustment. Applicants seek this correction solely on the basis that the Office will take in excess of three years to issue this patent.

As the instant application for patent term adjustment requests reconsideration of the patent term adjustment as it relates to the Office's failure to issue the patent within three years of the filing date, the application for patent term adjustment under 37 CFR 1.705(b) is **DISMISSED as PREMATURE**.

Knowledge of the actual date the patent issues is required to calculate the amount, if any, of additional patent term patentees are entitled to for Office failure to issue the patent within three years. See 37 CFR 1.702(b). (This is true even where a request for continued examination (RCE) was filed). The computer will not undertake the § 1.702(b) calculation until the actual date of issuance of the patent has been determined.

Likewise, the computer will not calculate any further Office delay under 37 CFR 1.702(a)(4) or applicant delay under 37 CFR 1.704(c)(10) until the actual date of issuance of the patent has been determined. As such, the Office cannot make a determination on the correctness of the patent term adjustment until the patent has issued.

Requesting reconsideration of the patent term adjustment to be indicated on the patent under 37 CFR 1.705(b) based on the initial determination of patent term adjustment and a projected issuance date of the patent (or even the filing date of the request for continued examination) is premature. Accordingly, it is appropriate to dismiss such a request as premature.

Rather than file an application for patent term adjustment under 37 CFR 1.705(b) contesting the 37 CFR 1.702(b) calculation at the time of the mailing of the notice of allowance, applicants are advised that they may wait until the time of the issuance of the patent and file a request for reconsideration of the patent term adjustment pursuant to 37 CFR 1.705(d). As the USPTO does not calculate the amount of time earned pursuant to 37 CFR 1.702(b) until the time of the issuance of the patent, the Office will consider any request for reconsideration of the patent term adjustment due to an error in the calculation of 37 CFR 1.702(b) to be timely if the request for reconsideration is filed within two months of the issuance of the patent. However, as to all other bases for contesting the initial determination of patent term adjustment received with the notice of allowance, applicants must timely file an application for patent term adjustment prior to the payment of the issue fee.[1]

---

[1] For example, if applicants dispute both the calculation of patent term adjustment under 37 CFR 1.702(a)(1) for Office failure to mail a first Office action or notice of allowance not later than fourteen months after the date on which the application was filed, and under 37 CFR 1.702(b) for Office failure to issue a patent within three years of the actual filing date of the application, then applicants must still timely file an application for patent term adjustment prior to the payment of the issue fee to contest the calculation of Office delay in issuing a first Office action or notice of allowance. See 37 CFR 1.705(b) and 35 U.S.C. 154(b)(3)(B). A dispute as to the calculation of the § 1.702(a)(1) period raised on request for reconsideration of patent term adjustment under 37 CFR 1.705(d) will be dismissed as untimely filed.

The Office acknowledges submission of the $200.00 fee set forth in 37 CFR 1.18(e) for consideration of the application for patent term adjustment under 37 CFR 1.705(b).

Any request for reconsideration of the patent term adjustment indicated on the patent must be timely filed within two months after issuance pursuant to 37 CFR 1.705(d) and must include payment of the required fee under 37 CFR 1.18(e).

The Office of Data Management has been advised of this decision. This application is being referred to the Office of Data Management for issuance of the patent.

Telephone inquiries specific to this decision should be directed to the undersigned at (571) 272-3211.

Christina Tartera Donnell

Christina Tartera Donnell
Senior Petitions Attorney
Office of Petitions

UNITED STATES PATENT AND TRADEMARK OFFICE

Commissioner for Patents
United States Patent and Trademark Office
P.O. Box 1450
Alexandria, VA 22313-1450
www.uspto.gov

ST. ONGE STEWARD JOHNSTON & REENS,
986 BEDFORD STREET
STAMFORD CT 06905-5619

COPY MAILED

AUG 09 2005

OFFICE OF PETITIONS

In re Application of	:	
Ralf Aumuller et al	:	
Application No. 10/816,448	:	DECISION GRANTING PETITION
Filed: April 1, 2004	:	UNDER 37 CFR 1.137(b)
Attorney Docket No. 03959-P0023A	:	

This is a decision on the petition under 37 CFR 1.137(b), filed May 23, 2005, to revive the above-identified application.

The petition is **GRANTED**.

The petition satisfies the conditions for revival pursuant to the provisions of 37 CFR 1.137(b) in that (1) the reply in the form of an amendment; (2) the petition fee; and (3) the required statement of unintentional delay have been received. Accordingly, the reply to the nonfinal Office action of July 15, 2004, is accepted as having been unintentionally delayed.

Telephone inquiries concerning this decision should be directed to the undersigned at (571) 272-3208.

This matter is being referred to Technology Center AU 3683.

Karen Creasy

Karen Creasy
Petitions Examiner
Office of Petitions
Office of the Deputy Commissioner
for Patent Examination Policy

UNITED STATES PATENT AND TRADEMARK OFFICE

COMMISSIONER FOR PATENTS
UNITED STATES PATENT AND TRADEMARK OFFICE
P.O. BOX 1450
ALEXANDRIA, VA 22313-1450
www.uspto.gov

Paper No.

COPY MAILED

MAR 26 2008

OFFICE OF PETITIONS

FINA TECHNOLOGY INC
PO BOX 674412
HOUSTON TX 77267-4412

In re Application of :
Sinoy et al. : DECISION ON PETITION
Application No. 10/816,462 :
Filed: April 1, 2004 :
Atty Docket No. F-918 (31223. :
00035) :

This is a decision on the PETITION UNDER 37 CFR §1.181 TO WITHDRAW HOLDING OF ABANDONMENT filed October 3, 2007.

The petition is **DISMISSED**.

Any request for reconsideration pursuant to § 1.181 must be filed within **TWO (2) MONTHS** of the date of this decision in order to be considered timely. See 37 CFR §1.181(f). Extensions of time under §1.136(a) are not permitted

The above-identified application became abandoned for failure to file a timely and proper reply to the final Office action mailed September 1, 2005. This Office action set a shortened statutory period for reply of three (3) months, with extensions of time obtainable under § 1.136(a). A reply was filed on November 29, 2006. The response was considered by the examiner but determined not to place the application in condition for allowance. See Advisory Action mailed December 18, 2006. Further, terminal disclaimer was filed on January 3, 2007 (and fee submitted by mail filed January 8, 2007)[1]. However, as stated on the Notice of Abandonment, the Terminal Disclaimer was not proper as it did not give the correct application number.

[1] The extension of time for response within the second month necessary to make this reply filed Wednesday, January 3, 2007 by facsimile with the balance submitted by mail on January 8, 2007 timely has been charged to Deposit Account No. 50-2225, as authorized. January 2, 2007 was not a federal holiday, and no review of Office notices indicates that January 2, 2007 was designated by the USPTO as a holiday or that the Office was otherwise closed.

The courtesy Notice of Abandonment was mailed on August 31, 2007.

Relying on a telephone interview of January 3, 2007 and the terminal disclaimer filed January 3, 2007 petitioner requests that the holding of abandonment be withdrawn. Petitioner acknowledges that the terminal disclaimer filed January 3, 2007 did not disclaim the correct application.

Petitioner's arguments have been considered, but not found persuasive. It is the applicant's responsibility to take the necessary action in an application under a final Office action to provide a complete reply under 37 CFR 1.113. It is clear here that applicant did not submit a proper reply[2]. The entry of the terminal disclaimer by the paralegal does not make the terminal disclaimer proper. Upon consideration of the submission of the terminal disclaimer by the examiner it was determined that it was not proper. As stated in MPEP 714.03, an amendment should be denied entry if some point necessary for a complete reply under 37 CFR 1.113 (after final) was omitted, even if the omission was through an apparent oversight or inadvertence. Where a submission after a final Office action (e.g., an amendment under 37 CFR 1.116) does not place the application in condition for allowance, the period for reply under 37 CFR 1.113 continues to run until a reply under 37 CFR 1.113 (i.e., a notice of appeal or an amendment that places the application in condition for allowance) is filed. The nature of the omission (e.g., whether the amendment raises new issues, or would place the application in condition for allowance but for it being unsigned or not in compliance with 37 CFR 1.121) is immaterial. The examiner cannot give the applicant a time period under 37 CFR 1.135(c) to supply the omission; however, applicant may obtain additional time under 37 CFR 1.136(a) to file another or supplemental amendment in order to supply the omission.

In this instance, the terminal disclaimer had a material omission. It did not identify the correct application. The maximum period for reply expired without such correction. Accordingly, the application properly became abandoned.

---

[2] It is noted that in response to applicant's request for reconsideration filed November 29, 2006, the examiner determined that the final Office action would not be withdrawn. Moreover, the final Office action has not, in fact, been withdrawn and a double patenting rejection has not been entered. As such it is questionable whether even had the terminal disclaimer been proper would it have placed the application in condition for allowance.

Under the circumstances, withdrawal of the holding of abandonment is not warranted.

Applicant is not precluded from filing a petition to revive under 37 CFR 1.137. The filing of any such petition should not be intentionally delayed. See MPEP 711.03(c).

Receipt of the corrected terminal disclaimer filed October 3, 2007 is acknowledged. Any corrections with respect to approval of the terminal disclaimers filed in this application will be undertaken upon return of this application to pending status.

Further correspondence with respect to this decision should be addressed as follows:

By mail: Mail Stop Petition
Commissioner for Patents
P.O. Box 1450
Alexandria, VA 22313-1450

By fax: (571) 273-8300
ATTN: Office of Petitions

By hand: Customer Service Window
Randolph Building
401 Dulany Street
Alexandria, VA 22314

Telephone inquiries specific to this matter should be directed to the undersigned at (571) 272-3219.

Nancy Johnson
Senior Petitions Attorney
Office of Petitions

UNITED STATES PATENT AND TRADEMARK OFFICE

Commissioner for Patents
United States Patent and Trademark Office
P.O. Box 1450
Alexandria, VA 22313-1450
www.uspto.gov

Paper No.

FINA TECHNOLOGY INC
PO BOX 674412
HOUSTON TX 77267-4412

COPY MAILED

SEP 17 2008

OFFICE OF PETITIONS

In re Application of :
Sinoy et al. :
Application No. 10/816,462 :
Filed: April 1, 2004 :
Atty Docket No. F-918 (31223. :
00035) :

DECISION ON PETITION

This is a decision on the PETITION TO REVIVE UNINTENTIONALLY ABANDONED APPLICATION UNDER 37 U.S.C. §1.136(a) filed May 21, 2008, which is properly treated as a petition under 37 CFR 1.137(b). This decision is made in the light of the supplement to petition filed August 21, 2008, specifically identifying the submission under §1.114. This decision is made in light of the supplement to petition filed August 26, 2008, transmitting the required corrected terminal disclaimer.

The petition is **GRANTED**.

The above-identified application became abandoned for failure to file a timely and proper reply to the final Office action mailed September 1, 2005. A courtesy Notice of Abandonment was mailed on August 31, 2007. By decision mailed March 26, 2008, a previous PETITION UNDER 37 CFR §1.181 TO WITHDRAW HOLDING OF ABANDONMENT filed October 3, 2007 was dismissed.

In response, applicants timely filed the instant petition. The petition includes the required reply in the form of a request for continued examination (RCE), RCE fee and submission in the form of a corrected Terminal Disclaimer filed August 26, 2008; payment of the petition fee; and a statement of unintentional delay. No terminal disclaimer is required for purposes of revival, aside from the corrected Terminal Disclaimer necessary to correct an omission in the rejected Terminal Disclaimer.

Technology Center AU 1796 has been advised of this decision. The application is, thereby, forwarded to the examiner for consideration of the request for continued examination (RCE) and submission under §1.114 (a Terminal Disclaimer) filed August 26, 2008.

Telephone inquiries specific to this matter should be directed to the undersigned at (571) 272-3219.

Nancy Johnson
Senior Petitions Attorney
Office of Petitions

UNITED STATES PATENT AND TRADEMARK OFFICE

Commissioner for Patents
United States Patent and Trademark Office
P.O. Box 1450
Alexandria, VA 22313-1450
www.uspto.gov

Patent No. : 7,514,504 B2
Ser. No. : 10/816,462
Inventor(s) : Van Sinoy et al.
Issued : Apr., 2009
Title : POLYETHYLENE BLENDS WITH GOOD CONTACT TRANSPARENCY
Docket No. : F-918 (31223.00035)

Re: Request for Certificate of Correction

Consideration has been given your request for the issuance of a certificate of correction for the above-identified patent under the provisions of Rule(s) 1.322 and/or 1.323.

Assignees' names and addresses (assignment data) printed in a patent, are based *solely* on information supplied in the appropriate space for identifying the assignment data, i.e., item 3 of the Issue Fee Transmittal Form PTOL-85B. Granting of a request under 37 CFR 3.81(b) is required to correct applicant's error providing ***incorrect or erroneous*** assignment data, *before* issuance of a Certificate of Correction, under 37 CFR 1.323 *(see Manual of Patent Examining Procedures (M.P.E.P) Chp.1400, sect. 1481).* This procedure is required *at any time after the issue fee is paid*, including after issuance of the patent.

In view of the foregoing, your request, in this mater, is hereby denied.

A request to correct the Assignee under 37 CFR 3.81(b) should include:

A. **the processing fee set forth in 37 CFR 1.117(h) (currently $130);**
B. a statement that the failure to include the correct assignee name on the PTOL-85B was inadvertent; and
C. a copy of the Notice of Recordation of Assignment Document, reflecting the reel and frame number where the assignment(s) is recorded and/or reflecting proof of *the date* the assignment was submitted for recordation.

In the Request, Applicant(s) may request that the file be forwarded to Certificates of Correction Branch, for issuance of a Certificate of Correction, if the Request is granted.

Any request under 37 CFR 3.81(b) should be directed to the following address or facsimile number:

By mail: Mail Stop PETITIONS
Commissioner for Patents
Post Office Box 1450
Alexandria, VA 22313-1450

By hand: Customer Service Window
Mail Stop Petitions
Randolph Building
40l Dulany Street
Alexandria, VA 22314

By fax: (571) 273-0025
ATTN: Office of Petitions

If a fee (currently $100) was previously submitted for consideration of a Request for Certificate of Correction, under CFR 1.323, to correct assignment data, , no additional fee is required.

Ennis Young
For Mary Diggs
Decisions & Certificates
of Correction Branch
(703) **756-1542** or (703) 756-1575

UNITED STATES PATENT AND TRADEMARK OFFICE

Commissioner for Patents
United States Patent and Trademark Office
P.O. Box 1450
Alexandria, VA 22313-1450
www.uspto.gov

FINA TECHNOLOGY INC.
P.O. BOX 674412
HOUSTON, TX 77267-4412

MAILED

NOV 23 2009

OFFICE OF PETITIONS

In re Application of	:	
Alain Van SINOY, et al	:	
Application No. 10/816,462	:	ON PETITION
Filed: April 1, 2004	:	
Attorney Docket No. F-918 (31223.00035)	:	

This is a decision on the petition, filed August 3, 2009, which is being treated as a request under 37 CFR 3.81(b)[1] to correct the assignee's name on the Fee(s) Transmittal form PTOL-85(b) so that the Letters Patent will issue to the assignee.

The request is **DISMISSED**.

Petitioner states that the correct assignee's name is **Total Petrochemicals Research Feluy, Feluy, Belgium**, and that an incorrect assignee's name was included on the Part B - Fee(s) Transmittal form at the time of payment of the issue fee. Accordingly, petitioner requests that the patent issue to **Total Petrochemicals Research Feluy, Feluy, Belgium.**

37 CFR 3.81(b), effective June 25, 2004, reads:

> *After payment of the issue fee:* Any request for issuance of an application in the name of the assignee submitted after the date of payment of the issue fee, and any request for a patent to be corrected to state the name of the assignee, must state that the assignment was submitted for recordation as set forth in § 3.11 before issuance of the patent, and must include a request for a certificate of correction under § 1.323 of this chapter (accompanied by the fee set forth in § 1.20(a)) and the processing fee set forth in § 1.17(i) of this chapter.

[1] *See* MPEP 1309, subsection II and Official Gazette of June 22, 2004

The request under 37 CFR 3.81(b) was not accompanied by a statement that the assignment was submitted for recordation before issuance of the patent. As petitioner has failed to comply with the provisions of 37 CFR 3.81(b), the request cannot be granted at this time.

Inquiries concerning this decision should be directed to Diane Goodwyn at (571) 272-6735. Any questions concerning issuance of a certificate of correction should be directed to the Certificates of Correction Branch at (571) 272-4200.

Thurman K. Page

Thurman K. Page
Petitions Examiner
Office of Petitions

UNITED STATES PATENT AND TRADEMARK OFFICE

UNITED STATES DEPARTMENT OF COMMERCE
United States Patent and Trademark Office
Address: COMMISSIONER FOR PATENTS
P.O. Box 1450
Alexandria, Virginia 22313-1450
www.uspto.gov

KLARQUIST SPARKMAN LLP
121 S.W. SALMON STREET
SUITE 1600
PORTLAND, OR 97204

Mail Date: 04/21/2010

Applicant	: Tian Wang	: DECISION ON REQUEST FOR
Patent Number	: 7668712	: RECALCULATION of PATENT
Issue Date	: 02/23/2010	: TERM ADJUSTMENT IN VIEW
Appliction No	: 10/816,466	: OF WYETH AND NOTICE OF INTENT TO
Filed	: 03/31/2004	: ISSUE CERTIFICATE OF CORRECTION
		:

The Request for Recalculation is **GRANTED** to the extent indicated.

The patent term adjustment has been determined to be **1523** days. The USPTO will *sua sponte* issue a certificate of correction reflecting the amount of PTA days determined by the recalculation.

Prior to the issuance of the certificate of correction, the USPTO will afford patentee an opportunity to be heard and request reconsideration. Accordingly, patentee has **one month or thirty (30) days**, whichever is longer, to file a request for reconsideration of this patent term adjustment calculation. See 35 U.S.C. 154(b)(3)(B)(ii) and 37 CFR 1.322(a)(4). No extensions of time will be granted under 37 CFR 1.136.

Patentee should use document code PET.OP if electronically filing a request for reconsideration of this patent term adjustment calculation. The patentee must also include the information required by 37 CFR 1.705(b)(2) and the fee required by 37 CFR 1.18(e). If patentee does not file a timely request for reconsideration of this patent term adjustment calculation including the information required by 37 CFR 1.705(b)(2) and the fee required by 37 CFR 1.18(e), the USPTO will issue a certificate of correction reflecting the PTA determination noted above.

Patentee should be aware that in order to preserve the right to review in the United States District Court for the District of Columbia of the USPTO patent term adjustment determination, patentee must ensure that he or she also take the steps required under 35 U.S.C. 154(b)(4)(A) in a timely manner. Nothing in the request for recalculation should be construed as providing an alternative time frame for commencing a civil action under 35 U.S.C. 154(b)(4)(A).

Any questions concerning this decision should be directed to the Office of Patent Legal Administration at 571-272-7702.

UNITED STATES PATENT AND TRADEMARK OFFICE

Commissioner for Patents
United States Patent and Trademark Office
P.O. Box 1450
Alexandria, VA 22313-1450
www.uspto.gov

PATENTTM.US
P.O. BOX 82788
PORTLAND OR 97282-0788

COPY MAILED

FEB 0 4 2009

OFFICE OF PETITIONS

In re Application of	:	
Keiji Kashima	:	
Application No. 10/816,469	:	DECISION ON PETITION
Filed: March 31, 2004	:	
Attorney Docket No. A-474	:	

This is a decision on the petition under the unintentional provisions of 37 CFR 1.137(b), filed January 8, 2009, to revive the above-identified application.

The petition is **GRANTED**.

This application became abandoned for failure to timely pay the issue and publication fees on or before January 31, 2008, as required by the Notice of Allowance and Fee(s) Due mailed October 31, 2007. Accordingly, the date of abandonment of this application is February 1, 2008. A Notice of Abandonment was mailed February 27, 2008.

The petition satisfies the requirements of 37 CFR 1.137(b) in that petitioner has supplied (1) the reply in the form of payment of the issue fee of $1,510.00 and publication fee of $300.00; (2) the petition fee of $1,620.00; and (3) a proper statement of unintentional delay.

Telephone inquiries concerning this decision should be directed to Joan Olszewski at (571) 272-7751.

This application is being referred to the Office of Data Management for processing into a patent.

/Liana Walsh/
Liana Walsh
Petitions Examiner
Office of Petitions

UNITED STATES PATENT AND TRADEMARK OFFICE

Commissioner for Patents
United States Patent and Trademark Office
P.O. Box 1450
Alexandria, VA 22313-1450
www.uspto.gov

MAILED

JUL 28 2004

Director's Office
Group 3700

Risto A. Rinne, Jr.
2173 East Francisco Blvd. Suite E
San Rafael, CA 94901

In re application of Elvira Reese	: : :	**DECISION ON PETITION** **TO MAKE SPECIAL** **UNDER 37 CFR. 1.102(c)**
Serial Number: 10/816473 Filed: March 31, 20004	: :	

For: **ELEVATED CANDLE LIGHTER**

This is a decision on the petition filed on June March 31, 2004, under 37 CFR. 1.102(c) to make special the above identified application because of the age/health of the applicant. Since the requirements of the M.P.E.P Section 708.02 IV have been met, the petition will be GRANTED.

The examiner is directed (1) to make an interference search for possible interfering applications, (2) to promptly examine this application out of turn, and (3) if any interfering application is discovered, to examine such application simultaneously and state in the first official letter of such application that it is being taken out of turn because of a possible interference.

Petitioner is advised that this application will continue to be special, throughout its entire prosecution and pendency, including interference or appeal, if any, only is Petitioner makes a prompt bona-fide effort, in response to each Office action, to place the application in condition for allowance, even if it is necessary to conduct an interview with the Examiner to accomplish this purpose.

Summary: Decision on Petition **GRANTED**.

Richard A. Bertsch
Director
Technology Center 3700
(703) 308-0975

rt: 7/28/04

UNITED STATES PATENT AND TRADEMARK OFFICE

Commissioner for Patents
United States Patent and Trademark Office
P.O. Box 1450
Alexandria, VA 22313-1450
www.uspto.gov

GLAXOSMITHKLINE
CORPORATE INTELLECTUAL PROPERTY, MAI B482
FIVE MOORE DR., PO BOX 13398
RESEARCH TRIANGLE PARK NC 27709-3398

COPY MAILED

JUL 31 2008

OFFICE OF PETITIONS

In re Application of	:	
Remi M. **PALMANTIER, et al**	:	
Application No. 10/816,476	:	ON PETITION
Filed: April 1, 2004	:	
Attorney Docket No. VU60111	:	

This is a decision on the petition under 37 CFR 1.137(b), filed December 21, 2007, and resubmitted January 29, 2008, to revive the above-identified application.

The petition is **GRANTED**.

The above-identified application became abandoned for failure to reply in a timely manner to the non-final Office action mailed June 6, 2007, which set a shortened statutory period for reply of three (3) months. No extensions of time under the provisions of 37 CFR 1.136(a) was obtained. Accordingly, the above-identified application became abandoned on September 7, 2007.

The above-identified application is being revived solely for purposes of continuity. As continuity has been established by this decision reviving the above-identified application, the above-identified application is again abandoned in favor of continuing application No.11/949,977, filed December 4, 2007. Since the $1540 petition fee submitted with the petition on January 29, 2008 was an overpayment, the fee will be credited to petitioner's deposit account

This abandoned application is being sent to the Files Repository.

Telephone inquiries concerning this decision should be directed to Lori Baker Amerson at (571) 272-6052 or in her absence, the undersigned at (571) 272-7099.

Christie Bottick
for David Bucci
Petitions Examiner
Office of Petitions

UNITED STATES PATENT AND TRADEMARK OFFICE

Commissioner for Patents
United States Patent and Trademark Office
P.O. Box 1450
Alexandria, VA 22313-1450
www.uspto.gov

NOV 16 2005

Bienstock & Michael, P.C.
250 West 57th St.
Suite 1917
New York, NY 10107

In re Application of:	:	
Babicz	:	DECISION ON REQUEST TO WITHDRAW FROM RECORD
Serial No.: 10/816,479	:	
Filed: April 1, 2004	:	
Attorney Docket No.: **30349**	:	

This is a decision on the request to withdraw as attorney of record under 37 C.F.R. § 1.36, filed March 10, 2005.

The request is **DISMISSED** as moot.

A review of the application file record reveals that Elliott Lipins was never properly appointed as attorney for the applicant. Although the law firm Bienstock & Michael, P.C., was designated to receive the correspondence from the Patent and Trademark Office, there was no attorney appointed. Accordingly, the present request is moot, and must be dismissed.

All future communications from the Office will continue to be directed to the above-listed address until otherwise notified by applicant.

Inquiries related to this decision should be directed to Jose Dees at (571) 272-1569.

Jose Dees, Special Programs Examiner
Technology Center 2800
Semiconductors, Electrical and Optical
Systems and Components

UNITED STATES PATENT AND TRADEMARK OFFICE

COMMISSIONER FOR PATENTS
UNITED STATES PATENT AND TRADEMARK OFFICE
P.O. BOX 1450
ALEXANDRIA, VA 22313-1450
www.uspto.gov

John C. Malloy
100 Edgewater DC, 116
Miami, FL 33133

COPY MAILED

MAR 1 4 2005

OFFICE OF PETITIONS

In re Application of	:	
Elizabeth Ramirez	:	
Application No. 10/816,483	:	ON PETITION
Filed: March 30, 2004	:	
Attorney Docket No. N/A	:	

This is a decision on the petition under 37 CFR 1.137(b), filed October 12, 2004, to revive the above-identified application.

The petition is **DISMISSED AS MOOT**.

Applicant filed the patent application on March 30, 2004 with a filing fee of $365, wherein the correct filing fee was $385. A "Notice to File Missing Parts of Nonprovisional Application" (Notice) was mailed to applicant on June 14, 2004, stating the statutory basic filing fee was insufficient. The Notice required to applicant to submit the balance of $20 for the basic filing fee[1] and a $65 Late Oath or Declaration surcharge within two months from the mail date of the Notice. Extensions of time under the provisions of 37 CFR 1.136 were permitted.

In reply to the Notice, applicant filed the instant petition along with the petition fee of $685, $30 for the balance owed for the basic filing fee, and $65 for the late surcharge. A review of the record shows that an additional $65 for the surcharge and $215 for an extension of time was tendered on October 13, 2004, by the inventor.

Since the petition was filed within the extendable time period, it is being treated as a request for a two-month extension of time. Accordingly, this application is not considered abandoned. Therefore, the petition fee of $685 is unnecessary.

[1] Effective, October 1, 2004, the basic filing fee increased from $385 to $395.

Applicant may request a refund of the $685 petition fee and the duplicate $65 late surcharge by writing to the Office of Finance, Refund Section. A copy of this decision should accompany such a request.

The application is being referred to the Office of Initial Patent Examination for further processing.

Telephone inquiries concerning this decision should be directed to the undersigned at (571) 272-3223

Marianne E. Jenkins

Marianne E. Jenkins
Petitions Examiner
Office of Petitions
Office of the Deputy Commissioner
for Patent Examination Policy

UNITED STATES PATENT AND TRADEMARK OFFICE

UNITED STATES DEPARTMENT OF COMMERCE
United States Patent and Trademark Office
Address: COMMISSIONER FOR PATENTS
P.O. Box 1450
Alexandria, Virginia 22313-1450
www.uspto.gov

APPLICATION NO.	FILING DATE	FIRST NAMED INVENTOR	ATTORNEY DOCKET NO.	CONFIRMATION NO.
10/816,490	04/01/2004	James H. Page	017267-8310	8602

23409 7590 05/28/2010
MICHAEL BEST & FRIEDRICH LLP
100 E WISCONSIN AVENUE
Suite 3300
MILWAUKEE, WI 53202

EXAMINER
STORMER, RUSSELL D

ART UNIT	PAPER NUMBER
3617	

MAIL DATE	DELIVERY MODE
05/28/2010	PAPER

Please find below and/or attached an Office communication concerning this application or proceeding.

The time period for reply, if any, is set in the attached communication.

UNITED STATES PATENT AND TRADEMARK OFFICE

Commissioner for Patents
United States Patent and Trademark Office
P.O. Box 1450
Alexandria, VA 22313-1450
www.uspto.gov

MAY 28 2010

MICHAEL BEST & FRIEDRICH LLP
100 E WISCONSIN AVENUE
Suite 3300
MILWAUKEE, WI 53202

In re Application of PAGE ET AL.
Appl. No.: 10/816,490
Patent No.: 7229140
Filed: April 01, 2004
For: PRE-TENSIONED SPRING TRACK TENSIONING SYSTEM

DECISION ON PETITON TO CORRECT INVENTORSHIP
37 CFR 1.324

This is a decision on the petition filed January 6, 2009 to correct inventorship under 37 CFR 1.324.

The petition is Granted.

A petition to correct inventorship as provided by 37 CFR 1.324 requires:

> (**1**) a statement from each person who is being added as an inventor and from each person who is being deleted as an inventor that the inventorship error occurred without any deceptive intention on their part,
> (**2**) a statement from the current named inventors who have not submitted a statement as per "(1)" either agreeing to the change of inventorship or stating that they have no disagreement in regard to the requested change,
> (**3**) a statement from all assignees of the parties submitting a statement under "(1)" and "(2)" agreeing to the change of inventorship in the patent; such statement must comply with the requirements of 37 CFR 3.73(b); and
> (**4**) the fee set forth in 37 CFR 1.20(b).

This petition satisfies all of the items above, and accordingly the petition is granted. The patent is being forwarded to Certificates of Corrections Branch for issuance of a certificate naming the actual inventors.

Telephone inquiries regarding this decision should be directed to S. Joseph Morano, Supervisory Patent Examiner for Art Unit 3617, at (571) 272-6684.

S. Joseph Morano
SPE, Art Unit 3617

SJM: 5/27/10

UNITED STATES PATENT AND TRADEMARK OFFICE

COMMISSIONER FOR PATENTS
UNITED STATES PATENT AND TRADEMARK OFFICE
P.O. BOX 1450
ALEXANDRIA, VA 22313-1450
www.uspto.gov

FAX RECEIVED

MAY 25 2005

OFFICE OF PETITIONS

AUZVILLE JACKSON, JR.
8652 RIO GRANDE ROAD
RICHMOND VA 23229

In re Application of	:	
Thomas J. Gretz et al.	:	DECISION
Application No. 10/816,518	:	ON PETITION
Filed: April 1, 2004	:	37 CFR 1.137(b)
Attorney Docket No. 1694(ARL)	:	

This is a decision on the petition under 37 CFR 1.137(b), filed March 22, 2005, to revive the above-identified application.

The petition is **GRANTED**.

37 CFR 1.137(b)(3) requires a statement that the entire delay in filing the required reply from the due date for the reply until the filing of a grantable petition pursuant to 37 CFR 1.137(b) was unintentional. If the statement contained in the instant petition varies from the language required by 37 CFR 1.137(b)(3), the statement contained in the instant petition is being construed as the statement required by 37 CFR 1.137(b)(3).

The above-identified application became abandoned for failure to timely pay the issue fee. In an application or patent, abandoned or lapsed for failure to pay the issue fee or any portion thereof, the required reply must be the payment of the issue fee or any outstanding balance thereof. See MPEP 711.03(c)(III)(A)(1).

Petitioner has met the requirements for the filing of a grantable petition under 37 CFR 1.137(b).

Telephone inquiries concerning this decision should be directed to Stephen K. Cronin at (571) 272-6051 or, in his absence, to the undersigned at (571) 272-3217.

The application file is being forwarded to the Office of Publications.

Brian Hearn

Brian Hearn
Petitions Examiner
Office of Petitions
Office of the Deputy Commissioner
for Patent Examination Policy

UNITED STATES PATENT AND TRADEMARK OFFICE

COMMISSIONER FOR PATENTS
UNITED STATES PATENT AND TRADEMARK OFFICE
P.O. BOX 1450
ALEXANDRIA, VA 22313-1450
www.uspto.gov

QUARLES & BRADY LLP
411 E. WISCONSIN AVENUE
SUITE 2040
MILWAUKEE, WI 53202-4497

MAILED

JUN 10 2010

OFFICE OF PETITIONS

In re Application of	:	
Michael H. Dunn et al	:	
Application No. 10/816,537	:	DECISION DISMISSING PETITION
Filed: April 1, 2004	:	UNDER 37 CFR 1.313(a)
Attorney Docket No.	:	
871462.00024.PA1242380US		

This is a decision on the petition filed June 7, 2010, which is being treated as a petition under 37 CFR 1.313(a), requesting withdrawal of the above-identified application from issue.

The petition is **dismissed** as moot for the reasons stated below.

A review of the file record discloses that a Notice of Allowance and Fee(s) Due was mailed on March 12, 2010, with the issue fee being due on or before June 12, 2010. The issue fee in this case has not been paid.

The filing of a petition under 37 CFR 1.313(a) is unnecessary, since the mere filing of an RCE and submission will effectively withdraw an application from issue prior to payment of the issue fee. In view thereof, the petition to withdraw from issue is dismissed as involving a moot issue. *Note* MPEP §§ 706.07(h)(IX) and 1308.

Inquiries concerning this decision may be directed to Irvin Dingle at (571) 272-3210.

The matter is being referred to Technology Center AU 2629 for appropriate processing of the RCE filed June 7, 2010, and for consideration of the concurrently filed Information Disclosure Statement.

/Irvin Dingle/
Irvin Dingle
Petitions Examiner
Office of Petitions

UNITED STATES PATENT AND TRADEMARK OFFICE

Commissioner for Patents
United States Patent and Trademark Office
P.O. Box 1450
Alexandria, VA 22313-1450
www.uspto.gov

SHELL OIL COMPANY
P.O. BOX 2463
HOUSTON TX 77252-2463

COPY MAILED

JUN 0 8 2005

OFFICE OF PETITIONS

In re Application of
Marek Matusz et al
Application No. 10/816,543
Filed: April 1, 2004
Attorney Docket No. TH-2458 02 (US) HS:KNL

:DECISION ON PETITION
:UNDER 37 CFR § 1.78(a)(3)

This is a decision on the petition under 37 CFR § 1.78(a)(3), filed January 7, 2005, to accept an unintentionally delayed claim under 35 U.S.C. § 120 for the benefit of prior-filed nonprovisional Application No. 10/431,189, filed May 7, 2003, set forth in the concurrently filed amendment.

The petition is **DISMISSED AS MOOT**.

A petition under 37 CFR § 1.78(a)(3) is only applicable to those applications filed on or after November 29, 2000.

Along with the instant petition under 37 CFR § 1.78(a)(3), petitioner has submitted an amendment to the first sentence of the specification following the title to include a reference to the prior-filed application.

The instant pending nonprovisional application was filed on April 1, 2004, and was pending at the time of filing of the instant petition. While a reference to the prior-filed application was not included in an ADS or in the first sentence of the specification following the title, reference nevertheless was made in the transmittal letter filed with the above-identified application.

The current procedure where a claim for priority under 37 CFR §1.78(a)(3) is not included in the first sentence of the specification or in an ADS but does appear either in the oath or declaration or a transmittal letter filed with the application and the Office notes the claim for priority, no petition will be required to accept a late claim for priority. This is because the application would have been scheduled for publication on the basis of the information concerning the claim submitted elsewhere in the application within the time period set forth in 37 CFR § 1.78(a)(2)(ii). However, on the other hand, if the USPTO does not note the claim for priority to the prior-filed application(s) set forth in the oath or declaration or transmittal letter submitted with the application, a petition will be required to accept a late claim for priority under § 37 CFR 1.78(a)(3). In the instant case, the Office noted the claim for priority of the prior-filed

application in the transmittal letter filed with the application, as shown by their inclusion on the filing receipt.

In view of the above, petitioner may request a refund of the petition fee ($1500) by writing to the Office of Finance, Refund Section. A copy of this decision should accompany petitioner's request.

Any questions concerning this decision on petition may be directed to the undersigned at (571) 272-3208. All other inquiries concerning either the examination procedures or status of the application should be directed to the Technology Center.

The examiner of Technology Center AU 1725 will take appropriate action on the amendment filed January 7, 2005, including consideration of the claim under 35 U.S.C. § 120 of the claim for benefit of prior-filed Application No. 10/431,189, filed May 7, 2003.

Karen Creasy

Karen Creasy
Petitions Examiner
Office of Petitions
Office of the Deputy Commissioner
for Patent Examination Policy

UNITED STATES PATENT AND TRADEMARK OFFICE

Commissioner for Patents
United States Patent and Trademark Office
P.O. Box 1450
Alexandria, VA 22313-1450
www.uspto.gov

COPY MAILED

JAN 12 2006

OFFICE OF PETITIONS

TOPE-MCKAY & ASSOCIATES
23852 PACIFIC COAST HIGHWAY #311
MALIBU, CA 90265

In re Application of	:	
Srikanth Krishnamurthy et al	:	
Application No. 10/816,546	:	DECISION GRANTING PETITION
Filed: April 1, 2004	:	UNDER 37 CFR 1.137(b)
Attorney Docket No. HRL040-Cont	:	

This is a decision on the petition filed April 15, 2005, which is being treated as a petition under 37 CFR 1.137(b), to revive the above-identified application.

The petition is **GRANTED**.

37 CFR 1.137(b)(3) requires a statement that the entire delay in filing the required reply from the due date for the reply until the filing of a grantable petition pursuant to 37 CFR 1.137(b) was unintentional. Since the statement contained in the instant petition varies from the language required by 37 CFR 1.137(b)(3), the statement contained in the instant petition is being construed as the statement required by 37 CFR 1.137(b)(3) and petitioner must notify the Office if this is **not** a correct interpretation of the statement contained in the instant petition.

The petition satisfies the conditions for revival pursuant to the provisions of 37 CFR 1.137(b) in that (1) the reply in the form of corrected drawings; (2) the petition fee; and (3) the required statement of unintentional delay have been received. Accordingly, the reply to the Notice To File Corrected Application Papers (Notice)of June 18, 2004, is accepted as having been unintentionally delayed.

Petitioner asserts that failure to timely reply was due to nonreceipt of the Notice of June 18, 2004. However, a review of the written record indicates no irregularity in the mailing of the Notice and is presumed to have been properly mailed to the address of record. Therefore, the required petition fee under 37 CFR 1.137(b) of $1,500, will not be waived.

Telephone inquiries concerning this decision should be directed to the undersigned at (571) 272-3208.

This matter is being referred to Technology Center AU 2686.

Karen Creasy

Karen Creasy
Petitions Examiner
Office of Petitions
Office of the Deputy Commissioner
for Patent Examination Policy

UNITED STATES PATENT AND TRADEMARK OFFICE

Commissioner for Patents
United States Patent and Trademark Office
P.O. Box 1450
Alexandria, VA 22313-1450
www.uspto.gov

TOPE-MCKAY & ASSOCIATES
23852 PACIFIC COAST HIGHWAY #311
MALIBU CA 90265

COPY MAILED

MAY 0 2 2008

OFFICE OF PETITIONS

In re Application of :
Srikanth Krishnamurthy et al :
Application No. 10/816,546 : DECISION ON REQUEST
Filed: April 1, 2004 :
Attorney Docket No. HRL040-C :

This is a decision on the Request for Refund filed March 10, 2008.

The request is **DISMISSED**.

This application became abandoned for failure to reply in a timely manner to the Notice to File Corrected Application Papers (Notice), mailed June 18, 2004. The Notice set a period for reply of Two (2) Months. No reply having been received, the application became abandoned on August 19, 2004. The Office mailed a Notice of Abandonment on March 15, 2005. Applicant filed a petition to revive under 37 CFR 1.137(b) on April 15, 2005. The petition was granted on January 12, 2006.

On February 29, 2008, the Office mailed a Notice entitled: "Withdrawal Of Previously Sent Notice" stating that the "Notice of Abandonment mailed on March 15, 2005, was sent in error and is hereby withdrawn." However, the Office erred in mailing the Notice of February 29, 2008, since the application was properly abandoned on August 19, 2004.

Further, it is noted that the phrase "[o]n filing" in 35 U.S.C. 41(a) (7) means that the petition fee is required for the filing (and not merely the grant) of a petition under 37 CFR 1.137. See H.R. Rep. No. 542, 97th Cong., 2d Sess. 6 (1982), reprinted in 1982 U.S.C.C.A.N. 770 ("[t]he fees set forth in this section are due on filing the petition"). Therefore, the Office: (A) will not refund the petition fee required by 37 CFR 1.17(l) or 1.17(m), regardless of whether the petition under 37 CFR 1.137 is dismissed or denied; and (B) will not reach the merits of any petition under 37 CFR 1.137 lacking the requisite petition fee. MPEP 711.03(c) (III) (B).

The Office sincerely apologizes for the error in the mailing of the Notice on February 29, 2008.

Telephone inquiries concerning this decision should be directed to the undersigned at (571) 272-3208.

Karen Creasy

Karen Creasy
Petitions Examiner
Office of Petitions

UNITED STATES PATENT AND TRADEMARK OFFICE

COMMISSIONER FOR PATENTS
UNITED STATES PATENT AND TRADEMARK OFFICE
P.O. BOX 1450
ALEXANDRIA, VA 22313-1450
www.uspto.gov

TOWNSEND AND TOWNSEND AND CREW, LLP
TWO EMBARCADERO CENTER
EIGHTH FLOOR
SAN FRANCISCO CA 94111-3834

MAILED

OCT 1 3 2005

Technology Center 2100

In re Application of: TAKAOKA, et al.
Application No. 10/816,552
Filed: March 31, 2004
For: COMPUTER SYSTEM MANAGEMENT PROGRAM, SYSTEM AND METHOD

DECISION ON PETITION
TO MAKE SPECIAL
(ACCELERATED EXAMINATION)
UNDER M.P.E.P. §708.02 (VIII)

This is a response to the petition filed 26 August 2005 under 37 C.F.R. §1.102(d) and M.P.E.P. §708.02 (VIII): Accelerated Examination, to make the above-identified application special.

The Petition is **DISMISSED**.

M.P.E.P. §708.02, Section VIII which sets out the prerequisites for a grantable petition for Accelerated Examination under 37 C.F.R. §1.102(d) states in relevant part:

A new application (one which has not received any examination by the examiner) may be granted special status provided that applicant (and this term includes applicant's attorney or agent) complies with each of the following items:

(a) Submits a petition to make special accompanied by the fee set forth in **37 CFR 1.17(h)**;

(b) Presents all claims directed to a single invention, or if the Office determines that all the claims presented are not obviously directed to a single invention, will make an election without traverse as a prerequisite to the grant of special status;

(c) Submits a statement(s) that a pre-examination search was made, listing the field of search by class and subclass, publication, Chemical Abstracts, foreign patents, etc. The pre-examination search must be directed to the invention as claimed in the application for which special status is requested. A search made by a foreign patent office satisfies this requirement;

(d) Submits one copy each of the references deemed most closely related to the subject matter encompassed by the claims if said references are not already of record; and

(e) Submits a detailed discussion of the references, which discussion points out, with the particularity required by 37 CFR 1.111 (b) and (c), how the claimed subject matter is patentable over the references.

In those instances where the request for this special status does not meet all the prerequisites set forth above, **applicant will be notified and the defects in the request will be stated**. The application will remain in the status of a new application awaiting action in its regular turn. In those instances where a request is defective in one or more respects, applicant will be given one opportunity to perfect the request in a renewed petition to make special. If perfected, the request will then be granted. If not perfected in the first renewed petition, any additional renewed petitions to make special may or may not be considered at the discretion of the Technology Center (TC) Special Program Examiner.

The petition filed 26 August 2005 fails to adequately meet requirement (e) of the criteria set forth above. The discussion of the references does not point out with the particularity required by 37 CFR 1.111(b) and (c) how the claimed subject matter is patentable over the references. The statement purporting to distinguish each independent claim from each reference recites all of the limitations of each independent claim. I.e., the statement purports that the entirety of each independent claim is not taught by any of the references most closely related. Such a statement is not a sufficient detailed description.

Additionally, it is suggested that if the identical statement is being made to distinguish each reference from an independent claim, as in the instant petition, then the statement should simply be made once in the petition. (E.g., "Regarding independent claim 1, none of the references disclose . . . .")

It is also noted that the petition refers to a "preliminary amendment filed herewith" (page 2) and "the accompanying preliminary amendment" (page 8). However, no preliminary amendment was filed with the petition.

Petition to Make Special **DISMISSED**.

Petitioner is given one opportunity to perfect the petition. Any request for reconsideration must be filed within TWO MONTHS of the mail date of this decision.

Until the renewed petition is submitted, the application will be returned to the examiner's docket to await treatment on the merits in the normal order of examination.

Pinchus M. Laufer
Special Program Examiner
Technology Center 2100
Computer Architecture, Software and Information Security
571-272-3599

ds

UNITED STATES PATENT AND TRADEMARK OFFICE

COMMISSIONER FOR PATENTS
UNITED STATES PATENT AND TRADEMARK OFFICE
P.O. BOX 1450
ALEXANDRIA, VA 22313-1450
www.uspto.gov

TOWNSEND AND TOWNSEND AND CREW, LLP
TWO EMBARCADERO CENTER
EIGHTH FLOOR
SAN FRANCISCO, CA 94111-3834

MAILED

DEC 2 7 2005

Technology Center 2100

In re Application of TAKAOKA et al	:	
Application No.: 10/816,552	:	DECISION ON PETITION
Filing Date: March 31, 2004	:	FOR ACCELERATED
For: A COMPUTER SYSTEM	:	EXAMINATION UNDER
MANAGEMENT PROGRAM, SYSTEM	:	M.P.E.P. §708.02(VIII)
AND METHOD	:	

This is a decision on the renewed petition filed December 2, 2005 under 37 CFR §1.102(d) and M.P.E.P. §708.02(VIII): Accelerated Examination, to make the above-identified application special.

The renewed petition was filed in response to a dismissal of the original petition filed August 26, 2005. The petition was dismissed for failure to provide a detailed discussion of the references, which discussion points out with the particularity required by 37 CFR 1.111(b) and (c), how the claimed subject matter is patentable over the references.

Applicants' submission filed December 2, 2005 corrects the deficiency noted in the original decision. The combined submissions meet all the criteria set forth in MPEP 708.02 (VIII). Accordingly, the petition is **GRANTED**.

The application file is being forwarded to the Examiner for accelerated examination in accordance with M.P.E.P. §708.02, Section VIII. If the application is subsequently allowed, it will be given priority for printing. See M.P.E.P. §1309.

Pinchus M. Laufer
Special Programs Examiner
Technology Center 2100
Computer Architecture, Software, and Information Security
571-272-3599

UNITED STATES PATENT AND TRADEMARK OFFICE

COMMISSIONER FOR PATENTS
UNITED STATES PATENT AND TRADEMARK OFFICE
P.O. BOX 1450
ALEXANDRIA, VA 22313-1450
www.uspto.gov

MAIL

JUL 13 2005

DIRECTOR OFFICE
TECHNOLOGY CENTER 2100

TOWNSEND AND TOWNSEND AND CREW, LLP
TWO EMBARCADERO CENTER
EIGHTH FLOOR
SAN FRANCISCO CA 94111-3834

In re Application of: IWAMURA, et al.
Application No. 10/816,572
Filed: March 31, 2004
For: REMOTE COPY NETWORK

DECISION ON PETITION
TO MAKE SPECIAL
(ACCELERATED EXAMINATION)
UNDER M.P.E.P. §708.02 (VIII)

This is a response to the petition filed 01 October 2004, under 37 C.F.R. §1.102(d) and M.P.E.P. §708.02 (VIII): Accelerated Examination, to make the above-identified application special.

The Petition is **DISMISSED**.

M.P.E.P. §708.02, Section VIII which sets out the prerequisites for a grantable petition for Accelerated Examination under 37 C.F.R. §1.102(d) states in relevant part:

A new application (one which has not received any examination by the examiner) may be granted special status provided that applicant (and this term includes applicant's attorney or agent) complies with each of the following items:

(a) Submits a petition to make special accompanied by the fee set forth in **37 CFR 1.17(h)**;

(b) Presents all claims directed to a single invention, or if the Office determines that all the claims presented are not obviously directed to a single invention, will make an election without traverse as a prerequisite to the grant of special status;

(c) Submits a statement(s) that a pre-examination search was made, listing the field of search by class and subclass, publication, Chemical Abstracts, foreign patents, etc. The pre-examination search must be directed to the invention as claimed in the application for which special status is requested. A search made by a foreign patent office satisfies this requirement;

(d) Submits one copy each of the references deemed most closely related to the subject matter encompassed by the claims if said references are not already of record; and

(e) Submits a detailed discussion of the references, which discussion points out, with the particularity required by 37 CFR 1.111 (b) and (c), how the claimed subject matter is patentable over the references.

In those instances where the request for this special status does not meet all the prerequisites set forth above, **applicant will be notified and the defects in the request will be stated**. The application will remain in the status of a new

application awaiting action in its regular turn. In those instances where a request is defective in one or more respects, applicant will be given one opportunity to perfect the request in a renewed petition to make special. If perfected, the request will then be granted. If not perfected in the first renewed petition, any additional renewed petitions to make special may or may not be considered at the discretion of the Technology Center (TC) Special Program Examiner.

The petition filed 01 October 2004 fails to adequately meet requirement (e) of the criteria set forth above. The discussion of the references does not point out with the particularity required by 37 CFR 1.111(b) and (c) how the claimed subject matter is patentable over the references. Rather, an identical statement for each of independent claims 1, 11, and 17, which in essence indicates that most of the limitations of each of these claims are not disclosed by the reference, is presented for each of the nine references deemed "most closely related". The detailed discussion should be directed to how the language of each of the independent claims is **specifically** distinguishable and patentable from **each** of the references provided in requirement (d) above.

Petition to Make Special **DISMISSED**.

Petitioner is given one opportunity to perfect the petition. Any request for reconsideration must be filed within TWO MONTHS of the mail date of this decision.

Until the renewed petition is submitted, the application will be returned to the examiner's docket to await treatment on the merits in the normal order of examination.

Pinchus M. Laufer
Special Program Examiner
Technology Center 2100
Computer Architecture, Software and Information Security
571-272-3599

ds

UNITED STATES PATENT AND TRADEMARK OFFICE

COMMISSIONER FOR PATENTS
UNITED STATES PATENT AND TRADEMARK OFFICE
P.O. BOX 1450
ALEXANDRIA, VA 22313-1450
www.uspto.gov

TOWNSEND AND TOWNSEND AND CREW, LLP
TWO EMBARCADERO CENTER
EIGHTH FLOOR
SAN FRANCISCO CA 94111-3834

MAILED

NOV - 8 2005

Technology Center 2100

In re Application of: IWAMURA, et al.
Application No. 10/816,572
Filed: March 31, 2004
For: REMOTE COPY NETWORK

DECISION ON PETITION
TO MAKE SPECIAL
(ACCELERATED EXAMINATION)
UNDER M.P.E.P. §708.02 (VIII)

This is a response to the renewed petition filed 15 September 2005, under 37 C.F.R. §1.102(d) and M.P.E.P. §708.02 (VIII): Accelerated Examination, to make the above-identified application special.

The renewed petition was filed in response to a dismissal of the original petition filed 01 October 2004. The petition was dismissed for failure to provide a detailed discussion of the references, which discussion points out with the particularity required by 37 CFR 1.111(b) and (c), how the claimed subject matter is patentable over the references.

Applicants' submission filed 15 September 2005 corrects the deficiency noted in the original decision. The combined submissions meet all the criteria set out above. Accordingly, the petition is **GRANTED**.

The application file is being forwarded to the Examiner of Record for accelerated examination according to the procedures set forth in MPEP § 708.02, Section VIII.

Pinchus M. Laufer
Special Program Examiner
Technology Center 2100
Computer Architecture, Software and Information Security
571-272-3599

ds

UNITED STATES PATENT AND TRADEMARK OFFICE

Commissioner for Patents
United States Patent and Trademark Office
P.O. Box 1450
Alexandria, VA 22313-1450
www.uspto.gov

Office of Counsel Code OC4
Naval Surface Warfare Center
Indian Head Division
101 Strauss Ave., Bldg. D-31
Indian Head, MD 20640-5035

COPY MAILED
SEP 25 2006
OFFICE OF PETITIONS

In re Application of

Shaffer, et al. :

Application No. 10/816,577

: DECISION ON PETITION

Filed: March 26, 2004

:

Attorney Docket No. 84,031

This is a decision on the petition under 37 CFR 1.137(b), filed, July 14, 2006, to revive the above-identified application.

The petition is **GRANTED**.

The above-cited application became abandoned for failure to file a proper reply in a timely manner to the final Office action mailed November 29, 2005, which set a shortened statutory period for reply of three (3) months from its mailing date. Extensions of the time set for reply were available pursuant to 37 CFR 1.136(a). A response was filed on March 28, 2006, with a request for an extension of time within the first month. An Advisory Action mailed April 13, 2006, advised petitioner that the response of March 28, 2006, would not be entered. No further responses were received within the allowable period. The application became abandoned on March 30, 2006. A Notice of Abandonment was mailed on July 11, 2006.

The Request for Continued Examination filed July 14, 2006, is noted and made of record.

The application is being forwarded to Technology Center 3600, GAU 3641 for further processing.

Telephone inquiries concerning this decision should be directed to the undersigned at (571) 272-3222.

Kenya A. McLaughlin
Petitions Attorney
Office of Petitions

UNITED STATES PATENT AND TRADEMARK OFFICE

Commissioner for Patents
United States Patent and Trademark Office
P.O. Box 1450
Alexandria, VA 22313-1450
www.uspto.gov

MAILED

MAY 20 2010

OFFICE OF PETITIONS

FISH & RICHARDSON P.C.
P.O. Box 1022
MINNEAPOLIS, MN 55440-1022

In re Patent No. 7,602,390	:	DECISION ON REQUEST
Arnold, et al.	:	FOR
Issue Date: October 13, 2009	:	RECONSIDERATION OF
Application No. 10/816,582	:	PATENT TERM ADJUSTMENT
Filed: March 31, 2004	:	and
Atty Docket No.07844-636001	:	NOTICE OF INTENT TO ISSUE
/P589	:	CERTIFICATE OF CORRECTION

This is a decision on the petition filed on December 11, 2009, which is being treated as a petition under 37 CFR 1.705(d) requesting that the patent term adjustment indicated on the above-identified patent be corrected to indicate that the term of the above-identified patent is extended or adjusted by three hundred and ninety-four (394) days.

The petition to correct the patent term adjustment indicated on the above-identified patent to indicate that the term of the above-identified patent is extended or adjusted by three hundred and ninety-three (393) days is **GRANTED to the extent indicated herein.**[1]

As the period from the filing date of the request for continued examination (RCE) to the issue date of the patent is not included in the "B" delay period, the over three year period begins on April 1, 2007 and ends on July 5, 2007, the day before the RCE was filed, and is 96 days, not 97 days. See 35 U.S.C. 154(b)(1)(B)(i). As such, the patent term adjustment is 393, not 394 days.

[1] It is noted that patentees disclosed a period of reduction of 90 days pursuant to 37 CFR 1.704(c)(8) pursuant to applicants' duty of good faith and candor to the Office. A review of the record reveals that the reduction under 37 CFR 1.704(c)(8) was warranted for the filing of an Information Disclosure Statement on October 4, 2007, 90 days after a Request for Continued Examination was filed July 6, 2007. The reduction of 90 days is included in the calculation of 393 days of patent term adjustment. The Office thanks patentee for his good faith and candor in bringing this to the attention of the Office.

The Office will *sua sponte* issue a certificate of correction. Pursuant to 37 CFR 1.322, the Office will not issue a certificate of correction without first providing assignee or patentee an opportunity to be heard. Accordingly, patentees are given **one (1) month or thirty (30) days**, whichever is longer, from the mail date of this decision to respond. No extensions of time will be granted under § 1.136.

The Office acknowledges receipt of the fee under 37 CFR 1.18(e).

The application is being forwarded to the Certificates of Corrections Branch for issuance of a certificate of correction. The Office will issue a certificate of correction indicating that the term of the above-identified patent is extended or adjusted by **three hundred and ninety-three (393)** days.

Telephone inquiries specific to this matter should be directed to the undersigned at (571) 272-3222.

Kenya A. McLaughlin
Petitions Attorney
Office of Petitions

Enclosure: Copy of DRAFT Certificate of Correction

DRAFT COPY

UNITED STATES PATENT AND TRADEMARK OFFICE

CERTIFICATE OF CORRECTION

PATENT : 7,602,390 B2

DATED : Oct. 13, 2009

INVENTOR(S) : Arnold, et al.

It is certified that error appears in the above-identified patent and that said Letters Patent is hereby corrected as shown below:

On the cover page,

[*] Notice: Subject to any disclaimer, the term of this patent is extended or adjusted under 35 USC 154(b) by (387) days

Delete the phrase "by 387 days" and insert – by 393 days--

UNITED STATES PATENT AND TRADEMARK OFFICE

Commissioner for Patents
United States Patent and Trademark Office
P.O. Box 1450
Alexandria, VA 22313-1450
www.uspto.gov

FISH & RICHARDSON P.C.
P.O. Box 1022
MINNEAPOLIS MN 55440-1022

COPY MAILED

APR 2 0 2007

OFFICE OF PETITIONS

In re Application of	:	
ARNOLD David R., **et al.**	:	
Application No. 10/816,587	:	DECISION GRANTING PETITION
Filed: March 31, 2004	:	UNDER 37 CFR 1.313(c)(2)
Attorney Docket No. 07844-637001/P590	:	

This is a decision on the petition under 37 CFR 1.313(c)(2), filed April 17, 2007, to withdraw the above-identified application from issue after payment of the issue fee.

The petition is **GRANTED**.

The above-identified application is withdrawn from issue for consideration of a submission under 37 CFR 1.114 (request for continued examination). *See* 37 CFR 1.313(c)(2).

Petitioner is advised that the issue fee paid on March 2, 2007 cannot be refunded. If, however, this application is again allowed, petitioner may request that it be applied towards the issue fee required by the new Notice of Allowance.[1]

Telephone inquiries should be directed to Monica A. Graves at (571) 272-7253.

This application is being referred to Technology Center AU 2628 for processing of the request for continued examination under 37 CFR 1.114 and for consideration of the concurrently filed information disclosure statement.

Frances Hicks
Petitions Examiner
Office of Petitions

---

[1] *The request to apply the issue fee to the new Notice may be satisfied by completing and returning the new Part B – Fee(s) Transmittal Form (along with any balance due at the time of submission). Petitioner is advised that the Issue Fee Transmittal Form* ***must*** *be completed and timely submitted to avoid abandonment of the application.*

UNITED STATES PATENT AND TRADEMARK OFFICE

Commissioner for Patents
United States Patent and Trademark Office
P.O. Box 1450
Alexandria, VA 22313-1450
www.uspto.gov

FISH & RICHARDSON PC
PO BOX 1022
MINNEAPOLIS MN 55440-1022

COPY MAILED

SEP 13 2007

OFFICE OF PETITIONS

In re Application of Arnold, et al. Application No. 10/816,587 Filed: March 31, 2004 Attorney Docket No. 07844-637001/P590	DECISION ON APPLICATION FOR PATENT TERM ADJUSTMENT

This decision is in response to the "LETTER REGARDING PATENT TERM ADJUSTMENT (PTA) PURSUANT TO COMMENT 43 OF THE FINAL RULE (09/18/00) AT ALLOWANCE OF APPLICATION," filed March 2, 2007, notifying the Office of an error in Applicant's favor in the initial determination of patent term adjustment under 35 U.S.C. § 154(b).

The request for correction of the initial determination of patent term adjustment (PTA) is **GRANTED**.

The Office has updated the PAIR screen to reflect that the correct Patent Term Adjustment determination at the time of the mailing of the Notice of Allowance is **one hundred forty-eight (148)** days. A copy of the updated PAIR screen, showing the correct determination, is enclosed.

On December 4, 2006, the Office mailed the Determination of Patent Term Adjustment under 35 U.S.C. 154(b) in the above-identified application. The Notice stated that the patent term adjustment to date is one hundred ninety-seven (197) days.

The Office initially determined a patent term adjustment of one hundred ninety-seven (197) days based on an adjustment for PTO delay of two hundred eighteen (218) days, pursuant to 35 U.S.C. 154(b)(1)(A)(i) and 37 C.F.R. § 1.703(a)(1), reduced by applicants' delay of twenty-one (21) days pursuant to 35 U.S.C. 154(b)(2)(C)(i) and 37 C.F.R. § 1.704(b). The adjustments have been reviewed and found to be correct. Applicants state that they should have been assessed additional delay.

A review of the record reveals that the Office mailed a non-final Office action on January 4, 2006. Applicants filed a response on April 25, 2006 (made timely for purposes of avoiding abandonment by obtaining a one month extension of time), and were properly assessed delay of twenty-one (21) days pursuant to 37 C.F.R. § 1.704(b). However, on June 13, 2006, applicants filed an Information Disclosure Statement (IDS). The IDS was not requested by the examiner within the meaning of 37 C.F.R. § 1.704(c)(8). Moreover, the IDS did not include a § 1.704(d) statement. Accordingly, applicants should have been assessed forty-nine (49) additional days of delay pursuant to 37 C.F.R. § 1.704(c)(8), for filing a supplemental paper.

In view thereof, the correct determination of PTA at the time of the mailing of the Notice of Allowance is **one hundred forty-eight (148)** days (218 days of PTO delay, reduced by 70 (21 + 49) days of Applicant delay).

No petition fee was required. The Office thanks Applicants for their good faith and candor in bringing this matter to the attention of the Office.

The matter is being forwarded to the Group Art Unit 2628 for consideration of the RCE filed April 17, 2007.

Telephone inquiries specific to this letter should be directed to Cliff Congo, Petitions Attorney, at (571)272-3207.

Nancy Johnson
Senior Petitions Attorney
Office of Petitions

Enclosure: Copy of adjusted PAIR calculation

Day : Wednesday

PALM INTRANET

Date: 9/12/2007
Time: 17:39:19

PTA Calculations for Application: 10/816587			
Application Filing Date:	03/31/2004	PTO Delay (PTO):	218
Issue Date of Patent:		Three Years:	0
Pre-Issue Petitions:	0	Applicant Delay (APPL):	21
Post-Issue Petitions:	0	Total PTA (days):	148
PTO Delay Adjustment:	-49		

File Contents History

Number	Date	Contents Description	PTO	APPL	START
102	09/12/2007	ADJUSTMENT OF PTA CALCULATION BY PTO		49	
85	12/04/2006	MAIL NOTICE OF ALLOWANCE			
84	11/29/2006	ISSUE REVISION COMPLETED			
83	11/29/2006	NOTICE OF ALLOWANCE DATA VERIFICATION COMPLETED			
82	11/27/2006	NOTICE OF ALLOWABILITY			
81	10/12/2006	INFORMATION DISCLOSURE STATEMENT CONSIDERED			
80	10/12/2006	INFORMATION DISCLOSURE STATEMENT (IDS) FILED			
79	10/20/2006	DATE FORWARDED TO EXAMINER			
78	10/12/2006	REQUEST FOR CONTINUED EXAMINATION (RCE)			
77	10/20/2006	DISPOSAL FOR A RCE/CPA/129 (EXPRESS ABANDONMENT IF CPA)			
76	10/16/2006	RECEIPT INTO PUBS			
75	10/16/2006	RECEIPT INTO PUBS			
74	10/12/2006	WORKFLOW - REQUEST FOR RCE - BEGIN			
73	08/01/2006	RECEIPT INTO PUBS			
72	08/01/2006	RECEIPT INTO PUBS			
71	07/27/2006	RECEIPT INTO PUBS			
70	07/27/2006	RECEIPT INTO PUBS			
69	07/17/2006	EXPORT TO INITIAL DATA CAPTURE			
68	07/14/2006	MAIL NOTICE OF ALLOWANCE			
67	07/14/2006	MAIL NOTIFICATION OF TERMINAL DISCLAIMER - ACCEPTED			
66	07/11/2006	ISSUE REVISION COMPLETED			
		NOTICE OF ALLOWANCE DATA VERIFICATION			

65	07/11/2006	COMPLETED			
64	07/10/2006	NOTICE OF ALLOWABILITY			
63	06/12/2006	INFORMATION DISCLOSURE STATEMENT CONSIDERED			
62	06/13/2006	INFORMATION DISCLOSURE STATEMENT CONSIDERED			
61	06/26/2006	PARALEGAL TD ACCEPTED			
60	06/26/2006	NOTIFICATION OF TERMINAL DISCLAIMER - ACCEPTED			
59	06/12/2006	TERMINAL DISCLAIMER FILED			
58	06/12/2006	INFORMATION DISCLOSURE STATEMENT (IDS) FILED			
57	06/13/2006	ELECTRONIC INFORMATION DISCLOSURE STATEMENT			
56	04/25/2006	INFORMATION DISCLOSURE STATEMENT CONSIDERED			
55	04/25/2006	REFERENCE CAPTURE ON IDS			
54	04/25/2006	INFORMATION DISCLOSURE STATEMENT (IDS) FILED			
53	04/25/2006	NEW OR ADDITIONAL DRAWING FILED			
52	05/02/2006	DATE FORWARDED TO EXAMINER			
51	04/25/2006	RESPONSE AFTER NON-FINAL ACTION		21	46
50	04/25/2006	REQUEST FOR EXTENSION OF TIME - GRANTED			
49	04/25/2006	MAIL EXAMINER INTERVIEW SUMMARY (PTOL - 413)			
48	04/19/2006	EXAMINER INTERVIEW SUMMARY RECORD (PTOL - 413)			
47	03/21/2006	CASE DOCKETED TO EXAMINER IN GAU			
46	01/04/2006	MAIL NON-FINAL REJECTION	218		-1
45	12/30/2005	NON-FINAL REJECTION			
44	09/14/2005	INFORMATION DISCLOSURE STATEMENT CONSIDERED			
43	08/01/2005	INFORMATION DISCLOSURE STATEMENT CONSIDERED			
42	03/25/2005	INFORMATION DISCLOSURE STATEMENT CONSIDERED			
41	04/05/2005	INFORMATION DISCLOSURE STATEMENT CONSIDERED			
40	11/22/2004	INFORMATION DISCLOSURE STATEMENT CONSIDERED			

34	12/05/2005	CASE DOCKETED TO EXAMINER IN GAU			
33	10/26/2005	CASE DOCKETED TO EXAMINER IN GAU			
32	09/27/2005	CASE DOCKETED TO EXAMINER IN GAU			
31	09/14/2005	REFERENCE CAPTURE ON IDS			
30	09/14/2005	INFORMATION DISCLOSURE STATEMENT (IDS) FILED			
29	08/01/2005	REFERENCE CAPTURE ON IDS			
28	08/01/2005	INFORMATION DISCLOSURE STATEMENT (IDS) FILED			
27	03/25/2005	REFERENCE CAPTURE ON IDS			
26	03/25/2005	MISCELLANEOUS INCOMING LETTER			
25	09/14/2005	INFORMATION DISCLOSURE STATEMENT (IDS) FILED			
24	03/25/2005	MISCELLANEOUS INCOMING LETTER			
23	04/05/2005	MISCELLANEOUS INCOMING LETTER			
22	04/05/2005	REFERENCE CAPTURE ON IDS			
21	04/05/2005	INFORMATION DISCLOSURE STATEMENT (IDS) FILED			
20	04/05/2005	RESCIND NONPUBLICATION REQUEST FOR PRE GRANT PUBLICATION			
19	01/16/2005	IFW TSS PROCESSING BY TECH CENTER COMPLETE			
18	01/16/2005	CASE DOCKETED TO EXAMINER IN GAU			
17	12/07/2004	CORRECTED FILING RECEIPT			
16	11/22/2004	REFERENCE CAPTURE ON IDS			
15	11/22/2004	INFORMATION DISCLOSURE STATEMENT (IDS) FILED			
14	08/11/2004	NEW OR ADDITIONAL DRAWING FILED			
13	05/12/2004	PRELIMINARY AMENDMENT			
12	09/17/2004	APPLICATION RETURN FROM OIPE			
11	09/17/2004	APPLICATION RETURN TO OIPE			
10	09/16/2004	APPLICATION DISPATCHED FROM OIPE			
9	09/17/2004	APPLICATION IS NOW COMPLETE			
8	08/11/2004	PAYMENT OF ADDITIONAL FILING FEE/PREEXAM			
7	08/11/2004	A STATEMENT BY ONE OR MORE INVENTORS SATISFYING THE REQUIREMENT UNDER 35 USC 115, OATH OF THE APPLIC			
6	06/14/2004	NOTICE MAILED--APPLICATION INCOMPLETE--FILING DATE ASSIGNED			

5	03/31/2004	PGPUBS NONPUB REQUEST			
4	04/30/2004	CLEARED BY OIPE CSR			
3	04/30/2004	CASE CLASSIFIED BY OIPE			
2	04/11/2004	IFW SCAN & PACR AUTO SECURITY REVIEW			
1	03/31/2004	INITIAL EXAM TEAM NN			

Search Another: Application# Search

EXPLANATION OF PTA CALCULATION

EXPLANATION OF PTE CALCULATION

To go back use Back button on your browser toolbar.

Back to PALM | ASSIGNMENT | OASIS | Home page

UNITED STATES PATENT AND TRADEMARK OFFICE

Commissioner for Patents
United States Patent and Trademark Office
P.O. Box 1450
Alexandria, VA 22313-1450
www.uspto.gov

INTEL CORPORATION
P.O. BOX 5326
SANTA CLARA, CA 95056-5326

COPY MAILED

SEP 12 2005

OFFICE OF PETITIONS

In re Application of :
Brandon C. Barnett, et al. :
Application No. 10/816,592 :
Filed: March 31, 2004 :
Attorney Docket No. P15984 :

ON PETITION

This is a decision on the petition under 37 CFR 1.137(b) filed June 27, 2005, to revive the above-identified application.

The petition is **GRANTED.**

The above-identified application became abandoned for failure to reply in a timely manner to the Notice to File Missing Parts of Nonprovisional Application mailed June 14, 2004. The Notice set a period for reply of two (2) months from the mail date of the Notice. No extensions of time under the provisions of 37 CFR 1.136(a) were obtained. Accordingly, the above-identified application became abandoned on August 16, 2004.

Telephone inquiries concerning this decision should be directed to the undersigned at (571) 272-3229.

This application matter is being forwarded to the Office of Initial Patent Examination for further processing.

Retta Williams

Retta Williams
Petitions Examiner
Office of Petitions
Office of the Deputy Commissioner
for Patent Examination Policy

cc: Robert A. Diehl
2111 N.E. 25th Avenue
Hillsboro, OR 97214

UNITED STATES PATENT AND TRADEMARK OFFICE

Commissioner for Patents
United States Patent and Trademark Office
P.O. Box 1450
Alexandria, VA 22313-1450
www.uspto.gov

NAVAL RESEARCH LABORATORY
ASSOCIATE COUNSEL (PATENTS)
CODE 1008.2
4555 OVERLOOK AVENUE, S.W.
WASHINGTON, DC 20375-5320

COPY MAILED
AUG 1 0 2006
OFFICE OF PETITIONS

In re Application of Keller et al. :
Application No. 10/816,595 : Decision on Petition
Filing Date: March 25, 2004 :
Attorney Docket No. 96220-US1 :

This is a decision on the petition under 37 CFR 1.137(b), filed May 10, 2006, to revive the above-identified application.

The petition is **granted**.

The above-identified application became abandoned for failure to submit the issue fee in a timely manner in reply to the Notice of Allowance mailed January 25, 2006, which set a statutory period for reply of three (3) months. Accordingly, the above-identified application became abandoned on April 26, 2006.

The instant petition requests revival of the application.

Petitioner has met the requirements to revive the above-identified application pursuant to 37 CFR 1.137(b). Therefore, the petition is granted and the application is revived.

The Office of Publications will be informed of the instant decision and will issue the application as a patent in due course.

Telephone inquiries regarding this communication should be directed to Petitions Attorney Steven Brantley at (571) 272-3203.

Charles Steven Brantley
Senior Petitions Attorney
Office of Petitions

UNITED STATES PATENT AND TRADEMARK OFFICE

Commissioner for Patents
United States Patent and Trademark Office
P.O. Box 1450
Alexandria, VA 22313-1450
www.uspto.gov

Kevin K Irish
20201 Gaukler St
St Clair Shores, MI 48080-3772

COPY MAILED

AUG 1 5 2006

OFFICE OF PETITIONS

In re Application of Kevin Irish :
Application No. 10/816,599 :
Filing Date: April 5, 2004 :
For: "Mini-Sweep" and Its Components :

Decision on Petition

This is a decision on the petition filed June 20, 2006, under 37 CFR 1.181 to withdraw the holding of abandonment of the above-identified application.

The petition is **dismissed.**

Facts:

A final Office action was mailed November 29, 2005.

The Office action set an extendable shortened statutory period for reply of three (3) months. In other words, absent payment for an extension of time, a reply was due on or before February 28, 2006.[1]

The Office failed to receive a reply.

A Notice of Abandonment was mailed June 13, 2006.

The instant petition was filed June 20, 2006. The petition asserts a reply was filed with the Office on February 29, 2006.

Discussion:

The Office need not determine if the reply was a proper reply to the final Office action because the reply was untimely.

---

[1] MPEP 710.01(a) states,

> The actual time taken for reply is computed from the date stamped or printed on the Office action to the date of receipt by the Office of applicant's reply. No cognizance is taken of fractions of a day and applicant's reply is due on the corresponding day of the month 6 months or any lesser number of months specified after the Office action. For example, reply to an Office action with a 3-month shortened statutory period dated November 30 is due on the following February 28 (or 29 if it is a leap year), while a reply to an Office action dated February 28 is due on May 28 and not on the last day of May. Ex parte Messick, 7 USPQ 57 (Comm'r Pat. 1930).

The reply would only be timely, absent payment for an extension of time, if the reply was filed on or before February 28, 2006. Petitioner does not assert the reply was filed on or before February 28, 2006. Therefore, the petition must be dismissed.

Any request for reconsideration must be submitted within TWO (2) MONTHS from the mail date of this decision. No further petition fee is required for the request. Extensions of time under 37 CFR 1.136(a) are NOT permitted. The reconsideration request should include a cover letter entitled "Renewed Petition under 37 CFR 1.181."

Further correspondence with respect to this matter should be addressed as follows:

By mail: Mail Stop Petition
Commissioner for Patents
P.O. Box 1450
Alexandria, VA 22313-1450

By facsimile: (571) 273-8300
Attn: Office of Petitions

Telephone inquiries regarding this communication should be directed to Petitions Attorney Steven Brantley at (571) 272-3203.

Charles Steven Brantley
Senior Petitions Attorney
Office of Petitions

UNITED STATES PATENT AND TRADEMARK OFFICE

Commissioner for Patents
United States Patent and Trademark Office
P.O. Box 1450
Alexandria, VA 22313-1450
www.uspto.gov

Kevin K Irish
20201.Gaukler St
St Clair Shores, MI 48080-3772

COPY MAILED

JAN 1 2 2007

OFFICE OF PETITIONS

Decision on Petition

In re Application of Kevin Irish :
Application No. 10/816,599 :
Filing Date: April 5, 2004 :
For: "Mini-Sweep" and Its Components :

This is a decision on the petition filed October 16, 2006, under 37 CFR 1.181 to withdraw the holding of abandonment of the above-identified application.

The petition is **dismissed.**

Facts:

A final Office action was mailed November 29, 2005. The Office action set an extendable shortened statutory period for reply of three (3) months. In other words, absent payment for an extension of time, a reply was due on or before February 28, 2006. The Office failed to receive a reply. A Notice of Abandonment was mailed June 13, 2006.

The petition asserts a reply was filed with the Office on February 19, 2006.

Discussion:

In order for the petition to be granted, petitioner must prove a timely and proper reply was filed in response to the final Office action mailed November 29, 2005.

A proper reply to a final rejection consists only of:

(1) an amendment which *prima facie* placed the case in condition for allowance,
(2) a Notice of Appeal and the required fee,
(3) a RCE, or
(4) a continuation application.

The Office of Petitions contacted the examiner to determine if the reply submitted by petitioner on June 20, 2006, is a *proper* reply to the final Office action mailed November 29, 2005.

The examiner determined the reply was an improper reply to the final Office action. Copies of an Advisory Action and Notice of Non-Compliant Amendment are attached.

Since the reply was improper, even if timely filed, the Office need not determine the exact date the reply was first filed with the Office.

Petitioner may wish to consider filing a petition to revive based on unintentional abandonment under 37 CFR 1.137(b). A grantable petition pursuant to 37 CFR 1.137(b) must be accompanied by a proper reply, the required petition fee ($750 for a small entity), and a statement that the **entire** delay in filing the required reply from the due date for the reply until the filing of a grantable petition pursuant to 37 CFR 1.137(b) was unintentional. A copy of a blank petition form is enclosed for petitioner's convenience.

Any petition under 37 CFR 1.137(b) should be accompanied by a proper reply in the form of a Notice of Appeal, RCE, or continuation application. If petitioner fails to reply in the form of a Notice of Appeal (and fee), proper RCE, or continuation application, it may be construed as an intentional delay in presenting a grantable petition, which may adversely affect petitioner's ability to revive the abandoned application. A form which may be used for purposes of filing a RCE is enclosed.

Any request for reconsideration must be submitted within TWO (2) MONTHS from the mail date of this decision. No further petition fee is required for the request. Extensions of time under 37 CFR 1.136(a) are NOT permitted. The reconsideration request should include a cover letter entitled "Renewed Petition under 37 CFR 1.181."

Further correspondence with respect to this matter should be addressed as follows:

By mail: Mail Stop Petition
Commissioner for Patents
P.O. Box 1450
Alexandria, VA 22313-1450

By facsimile: (571) 273-8300
Attn: Office of Petitions

Telephone inquiries regarding this communication should be directed to Petitions Attorney Steven Brantley at (571) 272-3203.

Charles Steven Brantley
Senior Petitions Attorney
Office of Petitions

Attached: Advisory Action
Notice of Non-Compliant Amendment
Form PTO/SB/64
Form PTO/SB/30 (for RCE)

PTO/SB/30 (09-06)
Approved for use through 03/31/2007. OMB 0651-0031
U.S. Patent and Trademark Office; U.S. DEPARTMENT OF COMMERCE
Under the Paperwork Reduction Act of 1995, no persons are required to respond to a collection of information unless it contains a valid OMB control number.

Request for Continued Examination (RCE) Transmittal

Address to:
Mail Stop RCE
Commissioner for Patents
P.O. Box 1450
Alexandria, VA 22313-1450

Application Number	
Filing Date	
First Named Inventor	
Art Unit	
Examiner Name	
Attorney Docket Number	

This is a Request for Continued Examination (RCE) under 37 CFR 1.114 of the above-identified application.
Request for Continued Examination (RCE) practice under 37 CFR 1.114 does not apply to any utility or plant application filed prior to June 8, 1995, or to any design application. See Instruction Sheet for RCEs (not to be submitted to the USPTO) on page 2.

1. Submission required under 37 CFR 1.114 Note: If the RCE is proper, any previously filed unentered amendments and amendments enclosed with the RCE will be entered in the order in which they were filed unless applicant instructs otherwise. If applicant does not wish to have any previously filed unentered amendment(s) entered, applicant must request non-entry of such amendment(s).
   - a. ☐ Previously submitted. If a final Office action is outstanding, any amendments filed after the final Office action may be considered as a submission even if this box is not checked.
     - i. ☐ Consider the arguments in the Appeal Brief or Reply Brief previously filed on _____
     - ii. ☐ Other _____
   - b. ☐ Enclosed
     - i. ☐ Amendment/Reply
     - ii. ☐ Affidavit(s)/ Declaration(s)
     - iii. ☐ Information Disclosure Statement (IDS)
     - iv. ☐ Other _____
2. Miscellaneous
   - a. ☐ Suspension of action on the above-identified application is requested under 37 CFR 1.103(c) for a period of _____ months. (Period of suspension shall not exceed 3 months; Fee under 37 CFR 1.17(i) required)
   - b. ☐ Other _____
3. Fees The RCE fee under 37 CFR 1.17(e) is required by 37 CFR 1.114 when the RCE is filed.
   - a. ☐ The Director is hereby authorized to charge the following fees, any underpayment of fees, or credit any overpayments, to Deposit Account No. _____. I have enclosed a duplicate copy of this sheet.
     - i. ☐ RCE fee required under 37 CFR 1.17(e)
     - ii. ☐ Extension of time fee (37 CFR 1.136 and 1.17)
     - iii. ☐ Other _____
   - b. ☐ Check in the amount of $ _____ enclosed
   - c. ☐ Payment by credit card (Form PTO-2038 enclosed)

WARNING: Information on this form may become public. Credit card information should not be included on this form. Provide credit card information and authorization on PTO-2038.

SIGNATURE OF APPLICANT, ATTORNEY, OR AGENT REQUIRED

Signature		Date	
Name (Print/Type)		Registration No.	

CERTIFICATE OF MAILING OR TRANSMISSION

I hereby certify that this correspondence is being deposited with the United States Postal Service with sufficient postage as first class mail in an envelope addressed to: Mail Stop RCE, Commissioner for Patents, P. O. Box 1450, Alexandria, VA 22313-1450 or facsimile transmitted to the U.S. Patent and Trademark Office on the date shown below.

Signature			
Name (Print/Type)		Date	

This collection of information is required by 37 CFR 1.114. The information is required to obtain or retain a benefit by the public which is to file (and by the USPTO to process) an application. Confidentiality is governed by 35 U.S.C. 122 and 37 CFR 1.11 and 1.14. This collection is estimated to take 12 minutes to complete, including gathering, preparing, and submitting the completed application form to the USPTO. Time will vary depending upon the individual case. Any comments on the amount of time you require to complete this form and/or suggestions for reducing this burden, should be sent to the Chief Information Officer, U.S. Patent and Trademark Office, U.S. Department of Commerce, P.O. Box 1450, Alexandria, VA 22313-1450. DO NOT SEND FEES OR COMPLETED FORMS TO THIS ADDRESS. **SEND TO: Mail Stop RCE, Commissioner for Patents, P.O. Box 1450, Alexandria, VA 22313-1450.**
If you need assistance in completing the form, call 1-800-PTO-9199 and select option 2.

Under the Paperwork Reduction Act of 1995, no persons are required to respond to a collection of information unless it contains a valid OMB control number.

Instruction Sheet for RCEs

(not to be submitted to the USPTO)

NOTES:

An RCE is not a new application, and filing an RCE will not result in an application being accorded a new filing date.

Filing Qualifications:
The application must be a utility or plant application filed on or after June 8, 1995. The application cannot be a provisional application, a utility or plant application filed before June 8, 1995, a design application, or a patent under reexamination. See 37 CFR 1.114(e).

Filing Requirements:
Prosecution in the application must be closed. Prosecution is closed if the application is under appeal, or the last Office action is a final action, a notice of allowance, or an action that otherwise closes prosecution in the application (e.g., an Office action under *Ex parte Quayle*). See 37 CFR 1.114(b).

A submission and a fee are required at the time the RCE is filed. If reply to an Office action under 35 U.S.C. 132 is outstanding (e.g., the application is under final rejection), the submission must meet the reply requirements of 37 CFR 1.111. If there is no outstanding Office action, the submission can be an information disclosure statement, an amendment, new arguments, or new evidence. See 37 CFR 1.114(c). The submission may be a previously filed amendment (e.g., an amendment after final rejection).

WARNINGS:

Request for Suspension of Action:
All RCE filing requirements must be met before suspension of action is granted. A request for a suspension of action under 37 CFR 1.103(c) does not satisfy the submission requirement and does not permit the filing of the required submission to be suspended.

Improper RCE will NOT toll Any Time Period:

Before Appeal - If the RCE is improper (e.g., prosecution in the application is not closed or the submission or fee has not been filed) and the application is not under appeal, the time period set forth in the last Office action will continue to run and the application will be abandoned after the statutory time period has expired if a reply to the Office action is not timely filed. No additional time will be given to correct the improper RCE.

Under Appeal - If the RCE is improper (e.g., the submission or the fee has not been filed) and the application is under appeal, the improper RCE is effective to withdraw the appeal. Withdrawal of the appeal results in the allowance or abandonment of the application depending on the status of the claims. If there are no allowed claims, the application is abandoned. If there is at least one allowed claim, the application will be passed to issue on the allowed claim(s). See MPEP 1215.01.

See MPEP 706.07(h) for further information on the RCE practice.

Privacy Act Statement

The **Privacy Act of 1974 (P.L. 93-579)** requires that you be given certain information in connection with your submission of the attached form related to a patent application or patent. Accordingly, pursuant to the requirements of the Act, please be advised that: (1) the general authority for the collection of this information is 35 U.S.C. 2(b)(2); (2) furnishing of the information solicited is voluntary; and (3) the principal purpose for which the information is used by the U.S. Patent and Trademark Office is to process and/or examine your submission related to a patent application or patent. If you do not furnish the requested information, the U.S. Patent and Trademark Office may not be able to process and/or examine your submission, which may result in termination of proceedings or abandonment of the application or expiration of the patent.

The information provided by you in this form will be subject to the following routine uses:

1. The information on this form will be treated confidentially to the extent allowed under the Freedom of Information Act (5 U.S.C. 552) and the Privacy Act (5 U.S.C 552a). Records from this system of records may be disclosed to the Department of Justice to determine whether disclosure of these records is required by the Freedom of Information Act.
2. A record from this system of records may be disclosed, as a routine use, in the course of presenting evidence to a court, magistrate, or administrative tribunal, including disclosures to opposing counsel in the course of settlement negotiations.
3. A record in this system of records may be disclosed, as a routine use, to a Member of Congress submitting a request involving an individual, to whom the record pertains, when the individual has requested assistance from the Member with respect to the subject matter of the record.
4. A record in this system of records may be disclosed, as a routine use, to a contractor of the Agency having need for the information in order to perform a contract. Recipients of information shall be required to comply with the requirements of the Privacy Act of 1974, as amended, pursuant to 5 U.S.C. 552a(m).
5. A record related to an International Application filed under the Patent Cooperation Treaty in this system of records may be disclosed, as a routine use, to the International Bureau of the World Intellectual Property Organization, pursuant to the Patent Cooperation Treaty.
6. A record in this system of records may be disclosed, as a routine use, to another federal agency for purposes of National Security review (35 U.S.C. 181) and for review pursuant to the Atomic Energy Act (42 U.S.C. 218(c)).
7. A record from this system of records may be disclosed, as a routine use, to the Administrator, General Services, or his/her designee, during an inspection of records conducted by GSA as part of that agency's responsibility to recommend improvements in records management practices and programs, under authority of 44 U.S.C. 2904 and 2906. Such disclosure shall be made in accordance with the GSA regulations governing inspection of records for this purpose, and any other relevant (*i.e.*, GSA or Commerce) directive. Such disclosure shall not be used to make determinations about individuals.
8. A record from this system of records may be disclosed, as a routine use, to the public after either publication of the application pursuant to 35 U.S.C. 122(b) or issuance of a patent pursuant to 35 U.S.C. 151. Further, a record may be disclosed, subject to the limitations of 37 CFR 1.14, as a routine use, to the public if the record was filed in an application which became abandoned or in which the proceedings were terminated and which application is referenced by either a published application, an application open to public inspection or an issued patent.
9. A record from this system of records may be disclosed, as a routine use, to a Federal, State, or local law enforcement agency, if the USPTO becomes aware of a violation or potential violation of law or regulation.

PTO/SB/64 (09-06)
Approved for use through 03/31/2007. OMB 0651-0031
U.S. Patent and Trademark Office; U.S. DEPARTMENT OF COMMERCE
Under the Paperwork Reduction Act of 1995, no persons are required to respond to a collection of information unless it displays a valid OMB control number.

PETITION FOR REVIVAL OF AN APPLICATION FOR PATENT ABANDONED UNINTENTIONALLY UNDER 37 CFR 1.137(b)

Docket Number (Optional)

First named inventor:

Application No.: Art Unit:

Filed: Examiner:

Title:

Attention: Office of Petitions
Mail Stop Petition
Commissioner for Patents
P.O. Box 1450
Alexandria, VA 22313-1450
FAX (571) 273-8300

NOTE: If information or assistance is needed in completing this form, please contact Petitions Information at (571) 272-3282.

The above-identified application became abandoned for failure to file a timely and proper reply to a notice or action by the United States Patent and Trademark Office. The date of abandonment is the day after the expiration date of the period set for reply in the office notice or action plus an extensions of time actually obtained.

APPLICANT HEREBY PETITIONS FOR REVIVAL OF THIS APPLICATION

NOTE: A grantable petition requires the following items:
(1) Petition fee;
(2) Reply and/or issue fee;
(3) Terminal disclaimer with disclaimer fee - required for all utility and plant applications filed before June 8, 1995; and for all design applications; and
(4) Statement that the entire delay was unintentional.

1. Petition fee

☐ Small entity-fee $ _____ (37 CFR 1.17(m)). Applicant claims small entity status. See 37 CFR 1.27.

☐ Other than small entity – fee $ _____ (37 CFR 1.17(m))

2. Reply and/or fee

A. The reply and/or fee to the above-noted Office action in the form of _____(identify type of reply):

☐ has been filed previously on _____.
☐ is enclosed herewith.

B. The issue fee and publication fee (if applicable) of $ _____.

☐ has been paid previously on _____.
☐ is enclosed herewith.

This collection of information is required by 37 CFR 1.137(b). The information is required to obtain or retain a benefit by the public which is to file (and by the USPTO to process) an application. Confidentiality is governed by 35 U.S.C. 122 and 37 CFR 1.11 and 1.14. This collection is estimated to take 1.0 hour to complete, including gathering, preparing, and submitting the completed application form to the USPTO. Time will vary depending upon the individual case. Any comments on the amount of time you require to complete this form and/or suggestions for reducing this burden, should be sent to the Chief Information Officer, U.S. Patent and Trademark Office, U.S. Department of Commerce, P.O. Box 1450, Alexandria, VA 22313-1450. DO NOT SEND FEES OR COMPLETED FORMS TO THIS ADDRESS. **SEND TO: Mail Stop Petition, Commissioner for Patents, P.O. Box 1450, Alexandria, VA 22313-1450.**

If you need assistance in completing the form, call 1-800-PTO-9199 and select option 2.

Under the Paperwork Reduction Act of 1995, no persons are required to respond to a collection of information unless it displays a valid OMB control number.

3. Terminal disclaimer with disclaimer fee

☐ Since this utility/plant application was filed on or after June 8, 1995, no terminal disclaimer is required.

☐ A terminal disclaimer (and disclaimer fee (37 CFR 1.20(d)) of $ _____ for a small entity or $ _____ for other than a small entity) disclaiming the required period of time is enclosed herewith (see PTO/SB/63).

4. STATEMENT: The entire delay in filing the required reply from the due date for the required reply until the filing of a grantable petition under 37 CFR 1.137(b) was unintentional. [NOTE: The United States Patent and Trademark Office may require additional information if there is a question as to whether either the abandonment or the delay in filing a petition under 37 CFR 1.137(b) was unintentional (MPEP 711.03(c), subsections (III)(C) and (D)).]

WARNING:

Petitioner/applicant is cautioned to avoid submitting personal information in documents filed in a patent application that may contribute to identity theft. Personal information such as social security numbers, bank account numbers, or credit card numbers (other than a check or credit card authorization form PTO-2038 submitted for payment purposes) is never required by the USPTO to support a petition or an application. If this type of personal information is included in documents submitted to the USPTO, petitioners/applicants should consider redacting such personal information from the documents before submitting them to the USPTO. Petitioner/applicant is advised that the record of a patent application is available to the public after publication of the application (unless a non-publication request in compliance with 37 CFR 1.213(a) is made in the application) or issuance of a patent. Furthermore, the record from an abandoned application may also be available to the public if the application is referenced in a published application or an issued patent (see 37 CFR 1.14). Checks and credit card authorization forms PTO-2038 submitted for payment purposes are not retained in the application file and therefore are not publicly available.

Signature	Date
Typed or printed name	Registration Number, if applicable
Address	Telephone Number
Address	

Enclosures:
- ☐ Fee Payment
- ☐ Reply
- ☐ Terminal Disclaimer Form
- ☐ Additional sheets containing statements establishing unintentional delay
- ☐ Other: _____

CERTIFICATE OF MAILING OR TRANSMISSION [37 CFR 1.8(a)]

I hereby certify that this correspondence is being:

☐ Deposited with the United States Postal Service on the date shown below with sufficient postage as first class mail in an envelope addressed to: Mail Stop Petition, Commissioner for Patents, P. O. Box 1450, Alexandria, VA 22313-1450.

☐ Transmitted by facsimile on the date shown below to the United States Patent and Trademark Office at (571) 273-8300.

Date	Signature
	Typed or printed name of person signing certificate

Privacy Act Statement

The **Privacy Act of 1974 (P.L. 93-579)** requires that you be given certain information in connection with your submission of the attached form related to a patent application or patent. Accordingly, pursuant to the requirements of the Act, please be advised that: (1) the general authority for the collection of this information is 35 U.S.C. 2(b)(2); (2) furnishing of the information solicited is voluntary; and (3) the principal purpose for which the information is used by the U.S. Patent and Trademark Office is to process and/or examine your submission related to a patent application or patent. If you do not furnish the requested information, the U.S. Patent and Trademark Office may not be able to process and/or examine your submission, which may result in termination of proceedings or abandonment of the application or expiration of the patent.

The information provided by you in this form will be subject to the following routine uses:

1. The information on this form will be treated confidentially to the extent allowed under the Freedom of Information Act (5 U.S.C. 552) and the Privacy Act (5 U.S.C 552a). Records from this system of records may be disclosed to the Department of Justice to determine whether disclosure of these records is required by the Freedom of Information Act.
2. A record from this system of records may be disclosed, as a routine use, in the course of presenting evidence to a court, magistrate, or administrative tribunal, including disclosures to opposing counsel in the course of settlement negotiations.
3. A record in this system of records may be disclosed, as a routine use, to a Member of Congress submitting a request involving an individual, to whom the record pertains, when the individual has requested assistance from the Member with respect to the subject matter of the record.
4. A record in this system of records may be disclosed, as a routine use, to a contractor of the Agency having need for the information in order to perform a contract. Recipients of information shall be required to comply with the requirements of the Privacy Act of 1974, as amended, pursuant to 5 U.S.C. 552a(m).
5. A record related to an International Application filed under the Patent Cooperation Treaty in this system of records may be disclosed, as a routine use, to the International Bureau of the World Intellectual Property Organization, pursuant to the Patent Cooperation Treaty.
6. A record in this system of records may be disclosed, as a routine use, to another federal agency for purposes of National Security review (35 U.S.C. 181) and for review pursuant to the Atomic Energy Act (42 U.S.C. 218(c)).
7. A record from this system of records may be disclosed, as a routine use, to the Administrator, General Services, or his/her designee, during an inspection of records conducted by GSA as part of that agency's responsibility to recommend improvements in records management practices and programs, under authority of 44 U.S.C. 2904 and 2906. Such disclosure shall be made in accordance with the GSA regulations governing inspection of records for this purpose, and any other relevant (*i.e.*, GSA or Commerce) directive. Such disclosure shall not be used to make determinations about individuals.
8. A record from this system of records may be disclosed, as a routine use, to the public after either publication of the application pursuant to 35 U.S.C. 122(b) or issuance of a patent pursuant to 35 U.S.C. 151. Further, a record may be disclosed, subject to the limitations of 37 CFR 1.14, as a routine use, to the public if the record was filed in an application which became abandoned or in which the proceedings were terminated and which application is referenced by either a published application, an application open to public inspection or an issued patent.
9. A record from this system of records may be disclosed, as a routine use, to a Federal, State, or local law enforcement agency, if the USPTO becomes aware of a violation or potential violation of law or regulation.

Advisory Action Before the Filing of an Appeal Brief	Application No.	Applicant(s)	
	10/816,599	IRISH, KEVIN KING	
	Examiner	Art Unit	
	Randall Chin	1744	

--The MAILING DATE of this communication appears on the cover sheet with the correspondence address --

THE REPLY FILED 20 June 2006 FAILS TO PLACE THIS APPLICATION IN CONDITION FOR ALLOWANCE.

1. ☒ The reply was filed after a final rejection, but prior to or on the same day as filing a Notice of Appeal. To avoid abandonment of this application, applicant must timely file one of the following replies: (1) an amendment, affidavit, or other evidence, which places the application in condition for allowance; (2) a Notice of Appeal (with appeal fee) in compliance with 37 CFR 41.31; or (3) a Request for Continued Examination (RCE) in compliance with 37 CFR 1.114. The reply must be filed within one of the following time periods:
   a) ☒ The period for reply expires 3 months from the mailing date of the final rejection.
   b) ☐ The period for reply expires on: (1) the mailing date of this Advisory Action, or (2) the date set forth in the final rejection, whichever is later. In no event, however, will the statutory period for reply expire later than SIX MONTHS from the mailing date of the final rejection.

   Examiner Note: If box 1 is checked, check either box (a) or (b). ONLY CHECK BOX (b) WHEN THE FIRST REPLY WAS FILED WITHIN TWO MONTHS OF THE FINAL REJECTION. See MPEP 706.07(f).

Extensions of time may be obtained under 37 CFR 1.136(a). The date on which the petition under 37 CFR 1.136(a) and the appropriate extension fee have been filed is the date for purposes of determining the period of extension and the corresponding amount of the fee. The appropriate extension fee under 37 CFR 1.17(a) is calculated from: (1) the expiration date of the shortened statutory period for reply originally set in the final Office action; or (2) as set forth in (b) above, if checked. Any reply received by the Office later than three months after the mailing date of the final rejection, even if timely filed, may reduce any earned patent term adjustment. See 37 CFR 1.704(b).

NOTICE OF APPEAL

2. ☐ The Notice of Appeal was filed on _____. A brief in compliance with 37 CFR 41.37 must be filed within two months of the date of filing the Notice of Appeal (37 CFR 41.37(a)), or any extension thereof (37 CFR 41.37(e)), to avoid dismissal of the appeal. Since a Notice of Appeal has been filed, any reply must be filed within the time period set forth in 37 CFR 41.37(a).

AMENDMENTS

3. ☒ The proposed amendment(s) filed after a final rejection, but prior to the date of filing a brief, will not be entered because
   (a) ☒ They raise new issues that would require further consideration and/or search (see NOTE below);
   (b) ☐ They raise the issue of new matter (see NOTE below);
   (c) ☐ They are not deemed to place the application in better form for appeal by materially reducing or simplifying the issues for appeal; and/or
   (d) ☐ They present additional claims without canceling a corresponding number of finally rejected claims.

   NOTE: *See Continuation Sheet*. (See 37 CFR 1.116 and 41.33(a)).
4. ☒ The amendments are not in compliance with 37 CFR 1.121. See attached Notice of Non-Compliant Amendment (PTOL-324).
5. ☐ Applicant's reply has overcome the following rejection(s): _____.
6. ☐ Newly proposed or amended claim(s) _____ would be allowable if submitted in a separate, timely filed amendment canceling the non-allowable claim(s).
7. ☒ For purposes of appeal, the proposed amendment(s): a) ☒ will not be entered, or b) ☐ will be entered and an explanation of how the new or amended claims would be rejected is provided below or appended.
   The status of the claim(s) is (or will be) as follows:
   Claim(s) allowed: *none*.
   Claim(s) objected to: *none*.
   Claim(s) rejected: *1-3*.
   Claim(s) withdrawn from consideration: *none*.

AFFIDAVIT OR OTHER EVIDENCE

8. ☐ The affidavit or other evidence filed after a final action, but before or on the date of filing a Notice of Appeal will not be entered because applicant failed to provide a showing of good and sufficient reasons why the affidavit or other evidence is necessary and was not earlier presented. See 37 CFR 1.116(e).
9. ☐ The affidavit or other evidence filed after the date of filing a Notice of Appeal, but prior to the date of filing a brief, will not be entered because the affidavit or other evidence failed to overcome all rejections under appeal and/or appellant fails to provide a showing a good and sufficient reasons why it is necessary and was not earlier presented. See 37 CFR 41.33(d)(1).
10. ☐ The affidavit or other evidence is entered. An explanation of the status of the claims after entry is below or attached.

REQUEST FOR RECONSIDERATION/OTHER

11. ☒ The request for reconsideration has been considered but does NOT place the application in condition for allowance because: See Continuation Sheet.
12. ☐ Note the attached Information Disclosure Statement(s). (PTO/SB/08) Paper No(s). _____
13. ☒ Other: See Continuation Sheet.

Randall Chin
Primary Examiner
Art Unit: 1744

Continuation of 3. NOTE: The deletion of the phrase "Mini-Sweep" in claims 1-3 raises a new issue requiring further consideration and/or search .

Continuation of 11. does NOT place the application in condition for allowance because: The claims are still indefinite and fail to define the invention in the manner required by 35 USC 112, second paragraph. The claims are still narrative in form and replete with indefinite and functional or operational language. Please see paragraph 8. of the Office Action mailed 11/29/2005. Applicant should note the format of the claims in the patents cited .

Continuation of 13. Other: The drawings are still informal and Applicant is respectfully requested to see the previously mailed Notice of Draftperson's Patent Drawing Review (PTO-948) mailed 11/29/2005 for proper correction .

Notice of Non-Compliant Amendment (37 CFR 1.121)	Application No. 10/816,599	Applicant(s) IRISH, KEVIN KING	
	Examiner Randall Chin	Art Unit 1744	

-- The MAILING DATE of this communication appears on the cover sheet with the correspondence address --

The amendment document filed on 20 June 2006 is considered non-compliant because it has failed to meet the requirements of 37 CFR 1.121 or 1.4. In order for the amendment document to be compliant, correction of the following item(s) is required.

THE FOLLOWING MARKED (X) ITEM(S) CAUSE THE AMENDMENT DOCUMENT TO BE NON-COMPLIANT:

☒ 1. Amendments to the specification:
- ☐ A. Amended paragraph(s) do not include markings.
- ☐ B. New paragraph(s) should not be underlined.
- ☒ C. Other *See Continuation Sheet.*

☒ 2. Abstract:
- ☐ A. Not presented on a separate sheet. 37 CFR 1.72.
- ☒ B. Other *The same objection for the specification paragraphs above pertains for the amended Abstract. See 1.C. above.*

☐ 3. Amendments to the drawings:
- ☐ A. The drawings are not properly identified in the top margin as "Replacement Sheet," "New Sheet," or "Annotated Sheet" as required by 37 CFR 1.121(d).
- ☐ B. The practice of submitting proposed drawing correction has been eliminated. Replacement drawings showing amended figures, without markings, in compliance with 37 CFR 1.84 are required.
- ☐ C. Other _____.

☒ 4. Amendments to the claims:
- ☐ A. A complete listing of all of the claims is not present.
- ☐ B. The listing of claims does not include the text of all pending claims (including withdrawn claims)
- ☒ C. Each claim has not been provided with the proper status identifier, and as such, the individual status of each claim cannot be identified. Note: the status of every claim must be indicated after its claim number by using one of the following status identifiers: (Original), (Currently amended), (Canceled), (Previously presented), (New), (Not entered), (Withdrawn) and (Withdrawn-currently amended).
- ☒ D. The claims of this amendment paper have not been presented in ascending numerical order.
- ☒ E. Other: *See Continuation Sheet.*

☐ 5. Other (e.g., the amendment is unsigned or not signed in accordance with 37 CFR 1.4):

_____

For further explanation of the amendment format required by 37 CFR 1.121, see MPEP § 714.

TIME PERIODS FOR FILING A REPLY TO THIS NOTICE:

1. Applicant is given **no new time period** if the non-compliant amendment is an after-final amendment or an amendment filed after allowance. If applicant wishes to resubmit the non-compliant after-final amendment with corrections, the **entire corrected amendment** must be resubmitted.

2. Applicant is given **one month**, or thirty (30) days, whichever is longer, from the mail date of this notice to supply the correction, if the non-compliant amendment is one of the following: a preliminary amendment, a non-final amendment (including a submission for a request for continued examination (RCE) under 37 CFR 1.114), a supplemental amendment filed within a suspension period under 37 CFR 1.103(a) or (c), and an amendment filed in response to a *Quayle* action. If any of above boxes 1. to 4. are checked, the correction required is only the **corrected section** of the non-compliant amendment in compliance with 37 CFR 1.121.

   Extensions of time are available under 37 CFR 1.136(a) only if the non-compliant amendment is a non-final amendment or an amendment filed in response to a *Quayle* action.

   Failure to timely respond to this notice will result in:
   Abandonment of the application if the non-compliant amendment is a non-final amendment or an amendment filed in response to a *Quayle* action; or
   Non-entry of the amendment if the non-compliant amendment is a preliminary amendment or supplemental amendment.

_____ Legal Instruments Examiner (LIE), if applicable

_____ Telephone No.

Continuation of 1(c) Other: Applicant has apparently amended various sections of the specification, however, there must be an instruction, which unambiguously identifies the location of the paragraph to be amended. Further, the full text of any replacement paragraph to show all the changes relative to the previous version of the paragraph. The text of any added subject matter must be shown by UNDERLINING the added text. The text of any deleted subject matter must be shown by STRIKETHROUGH.

Continuation of 4(e) Other: In the claims, the text of any added subject matter must be shown by underlining the ADDED text. The text of any DELETED subject matter must be shown by strikethrough.

UNITED STATES PATENT AND TRADEMARK OFFICE

Commissioner for Patents
United States Patent and Trademark Office
P.O. Box 1450
Alexandria, VA 22313-1450
www.uspto.go

MAIL

AUG 1 6 2005

DIRECTOR OFFICE
TECHNOLOGY CENTER 2600

FENWICK & WEST LLP
SILICON VALLEY CENTER
801 CALIFORNIA STREET
MOUNTAIN VIEW CA 94041

In re application of:
Scott B. Peterson
Application No. 10/816,623
Filed: April 2, 2004
For: SURFACE COMPRESSION BASED ON REFERENCE GEOMETRY IN ANIMATION MODELS

DECISION ON REQUEST TO WITHDRAW FROM RECORD

This is a decision on the request for withdrawal as attorney/agent and change of correspondence address filed on April 25, 2005.

A grantable request to withdraw as attorney/agent of record must:
(1) indicate the present mailing address of the attorney(s)/agent(s) who seek(s) to withdraw, and
(2) be signed by each attorney/agent seeking to withdraw or clearly be signed on their behalf, and
(3) be *approved* at least thirty (30) days prior to the maximum extendable period for response to any outstanding Office Action, and
(4) indicate the address to which future correspondence should be mailed.

Petitioner has satisfied the requirements for successfully requesting withdrawal. Accordingly, the request is **GRANTED.**

All of the attorneys/agents listed in the Request withdraw have been withdrawn.

All future communications from the Office will be directed to the address listed below until otherwise notified by applicant. Applicant is reminded of the obligation to promptly notify the Patent and Trademark Office of any change in correspondence address to ensure receipt of all communications from the Office.

Kenneth A. Wieder
Special Program Examiner
Technology Center 2600
Communications
(571) 272-2986

cc: MORRISON & FOERSTER LLP
425 MARKET STREET
SAN FRANCISCO, CA 94105-2482

UNITED STATES PATENT AND TRADEMARK OFFICE

COMMISSIONER FOR PATENTS
UNITED STATES PATENT AND TRADEMARK OFFICE
P.O. BOX 1450
ALEXANDRIA, VA 22313-1450
www.uspto.gov

HOGAN & HARTSON L.L.P.
500 S. GRAND AVENUE
SUITE 1900
LOS ANGELES, CA 90071-2611

COPY MAILED

FEB 01 2005

OFFICE OF PETITIONS

In re Application of	:	
Shibata, et al.	:	
Application No. 10/816,630	:	ON PETITION
Filed: April 2, 2004	:	
Attorney Docket No. 83376.0002	:	

This is a decision on the petition, filed January 24, 2005, under 37 CFR 1.313(c)(2) to withdraw the above-identified application from issue after payment of the issue fee.

The petition is **GRANTED**.

The above-identified application is withdrawn from issue for consideration of a submission under 37 CFR 1.114 (request for continued examination). See 37 CFR 1.313(c)(2).

Petitioner is advised that the issue fee paid on October 15, 2004, in the above-identified application cannot be refunded. If, however, the above-identified application is again allowed, petitioner may request that it be applied towards the issue fee required by the new Notice of Allowance. [1]

Telephone inquiries relating to this decision should be directed to the undersigned at (571) 272-3204.

The application is being referred to Technology Center AU 2832 for further processing of the request for continued examination under 37 CFR 1.114.

Sherry D. Brinkley
Petitions Examiner
Office of Petitions
Office of the Deputy Commissioner
for Patent Examination Policy

[1]The request to apply the issue fee to the new Notice may be satisfied by completing and returning the new Issue Fee Transmittal Form PTOL-85(b), which includes the following language thereon: " Commissioner for Patents is requested to apply the Issue Fee and Publication Fee (if any) or re-apply any previously paid issue fee to the application identified above." Petitioner is advised that, whether a fee is indicated as being due or not, the Issue Fee Transmittal Form **must** be completed and timely submitted to avoid abandonment. Note the language in bold text on the first page of the Notice of Allowance and Fee(s) Due (PTOL-85).

UNITED STATES PATENT AND TRADEMARK OFFICE

Commissioner for Patents
United States Patent and Trademark Office
P.O. Box 1450
Alexandria, VA 22313-1450
www.uspto.gov

GE MEDICAL SYSTEM
C/O FOLEY & LARDNER LLP
777 EAST WISCONSIN AVENUE
MILWAUKEE WI 53202-5306

COPY MAILED

APR 14 2008

OFFICE OF PETITIONS

In re Application of Curtis G. Neason Application No. 10/816,641 Filed: April 2, 2004 Attorney Docket No. 066243-0236 (141210)	DECISION GRANTING PETITION UNDER 37 CFR 1.137(b)

This is a decision on the petition under 37 CFR 1.137(b), filed January 21, 2008, to revive the above-identified application.

The petition is **GRANTED**.

The petition satisfies the conditions for revival pursuant to the provisions of 37 CFR 1.137(b) in that (1) the reply in the form of an RCE and an amendment; (2) the petition fee; and (3) the required statement of unintentional delay have been received. Accordingly, the reply to the Final Rejection of April 20, 2007, is accepted as having been unintentionally delayed.

There is no indication that the person signing the instant petition was ever given a power of attorney or authorization of agent to prosecute the above-identified application. If the person signing the instant petition desires to receive future correspondence regarding this application, the appropriate power of attorney or authorization of agent must be submitted. While a courtesy copy of this decision is being mailed to the person signing the instant petition, all future correspondence will be directed to the address currently of record until such time as appropriate instructions are received to the contrary.

Telephone inquiries concerning this decision should be directed to the undersigned at (571) 272-3208.

This application is being referred to Technology Center AU 3768 to consider the reply received January 21, 2008.

Karen Creasy
Petitions Examiner
Office of Petitions

cc:

WILLIAM T. KRYGER
3000 N. GRANDVIEW BLVD., SN477
WAUKESHA, WI 53188

UNITED STATES PATENT AND TRADEMARK OFFICE

Commissioner for Patents
United States Patent and Trademark Office
P.O. Box 1450
Alexandria, VA 22313-1450
www.uspto.gov

WESLEY W. WHITMYER, JR.
ST. ONGE STEWARD JOHNSTON & REENS LLC
986 BEDFORD STREET
STAMFORD CT 06905-5619

COPY MAILED

SEP 17 2004

OFFICE OF PETITIONS

NOTICE

In re Application of :
Herbert Huettlin :
Application No. 10/816,642 :
Filed: April 2, 2004 :
Attorney Docket No. 03928-P0006A :

This is a notice regarding your request for acceptance of a fee deficiency submission under 37 CFR 1.28. On September 1, 1998, the Court of Appeals for the Federal Circuit held that 37 CFR 1.28(c) is the sole provision governing the time for correction of the erroneous payment of the issue fee as a small entity. **See DH Technology v. Synergystex International, Inc. 154 F.3d 1333, 47 USPQ2d 1865 (Fed. Cir. Sept. 1, 1998).**

The Office no longer investigates or rejects original or reissue applications under 37 CFR 1.56. **1098 Off. Gaz. Pat. Office 502 (January 3, 1989).** Therefore, nothing in this Notice is intended to imply that an investigation was done.

Your fee deficiency submission under 37 CFR 1.28 is hereby **ACCEPTED.**

Inquiries related to this communication should be directed to the undersigned at (703) 305-8859.

This file is being referred to the Office of Initial Patent Examination for further preexamination processing.

Karen Creasy

Karen Creasy
Petitions Examiner
Office of Petitions
Office of the Deputy Commissioner
for Patent Examination Policy

UNITED STATES PATENT AND TRADEMARK OFFICE

Commissioner for Patents
United States Patent and Trademark Office
P.O. Box 1450
Alexandria, VA 22313-1450
www.uspto.gov

COPY MAILED
JUN 04 2007
OFFICE OF PETITIONS

KENNETH E. KUFFNER
ROBERTS & SMABY
SUITE 3000
1717 MAIN STREET
DALLAS, TX 75201

In re Application of	:	
Larry M. Leone et al	:	
Application No. 10/816,651	:	ON PETITION
Filed: April 2, 2004	:	
Attorney Docket No. MODULAR	:	

This is a decision on the petition under 37 CFR 1.137(b), filed December 8, 2006, to revive the above-identified application.

The petition is **GRANTED**.

The above-identified application became abandoned for failure to reply in a timely manner to the Office action mailed November 2, 2005, which set a shortened statutory period for reply of one (1) month or thirty (30) days (whichever is later). No extensions of time under the provisions of 37 CFR 1.136(a) were obtained. Accordingly, the above-identified application became abandoned on December 3, 2005.

There is no indication that the person signing the instant petition was ever given a power of attorney or authorization of agent to prosecute the above-identified application. If the person signing the instant petition desires to receive future correspondence regarding this application, the appropriate power of attorney or authorization of agent must be submitted. While a courtesy copy of this decision is being mailed to the person signing the instant petition, all future correspondence will be directed to the address currently of record until such time as appropriate instructions are received to the contrary.

Telephone inquiries concerning this decision should be directed to Irvin Dingle at (571) 272-3210.

This matter is being referred to Technology Center AU 3644 for further processing.

Irvin Dingle
Petitions Examiner
Office of Petitions

cc: Chris D. Northcutt
Bracewell & Giuliani LLP
P.O. Box 61389
Houston, TX 77208-1389

UNITED STATES PATENT AND TRADEMARK OFFICE

Commissioner for Patents
United States Patent and Trademark Office
P.O. Box 1450
Alexandria, VA 22313-1450
www.uspto.gov

JAN - 9 2006

MCHALE & SLAVIN, P.A.
2855 PGA BLVD
PALM BEACH GARDENS, FL 33410

In re application of Andrew D. Carlson Application No. 10/816,654 Filed: April 2, 2004 For: FRONT SUSPENSION TUNING APPARATUS FOR VEHICLE WITH STRUTS	: : : : : : : :	**DECISION ON PETITION TO MAKE SPECIAL (INFRINGEMENT)**

This is a decision on the petition under 37 C.F.R § 1.102(d) filed October 13, 2005 to make the above-identified application special.

The petition requests that the above-identified application be made special under the procedure set forth in M.P.E.P. § 708.02, item II: Infringement.

MPEP 708.02 states that a Petition to Make Special based on Infringement must have the following: (1) the appropriate petition fee under 37 CFR 1.17(i); (2) a statement by the assignee, applicant, or attorney alleging: (A) that there is an infringing device or product actually on the market or method in use; (B) that a rigid comparison of the alleged infringing device, product or method with the claims of the application has been made, and that, in his or her opinion, some of the claims are unquestionably infringed; and (C) that he or she has made a careful and thorough search of the prior art, or has good knowledge of the prior art, and has sent a copy of the references deemed most closely related to the subject matter encompassed by the claims.

The petition filed October 13, 2005 meets all of the requirements above and, therefore, the petition is **GRANTED**.

The examiner is directed (1) to make an interference search for possible interfering applications; (2) to promptly examine this application out of turn; and (3) if any interfering application is discovered, to examine such application simultaneously and state in the first official letter of such application that it is being taken out of turn because of a possible interference.

Petitioner is advised that this application will continue to be special, throughout its entire prosecution and pendency, including interference and appeal, if any, only if petitioner makes a prompt *bona fide* effort, in response to each Office action, to place the application in condition for allowance, even if it is necessary to conduct an interview with the examiner to accomplish this purpose.

Randolph A. Reese
Special Programs Examiner
Technology Center 3600
571-252-6619

RAR/dew: 10/27/05

UNITED STATES PATENT AND TRADEMARK OFFICE

Commissioner for Patents
United States Patent and Trademark Office
P.O. Box 1450
Alexandria, VA 22313-1450
www.uspto.gov

INTERVET/SCHERING-PLOUGH ANIMAL HEALTH
PATENT DEPARTMENT
PO BOX 318
29160 INTERVET LANE
MILLSBORO DE 19966-0318

MAILED

JAN 23 2009

OFFICE OF PETITIONS

In re Application of	:	
Shuster et al.	:	
Application No. 10/816,663	:	DECISION ON PETITION
Filed: April 2, 2004	:	
Attorney Docket No. 2003.027 US/AH06021US01	:	

This is a decision on the petition under the unintentional provisions of 37 CFR 1.137(b), filed January 8, 2009, to revive the above-identified application.

The petition is **GRANTED**.

The application became abandoned for failure to timely reply within the meaning of 37 CFR 1.113 to the final Office action mailed June 17, 2008, which set a shortened statutory period for reply of three (3) months. No extensions of time under the provisions of 37 CFR 1.136(a) were timely obtained. Accordingly, the application became abandoned on September 18, 2008.

The petition satisfies the requirements of 37 CFR 1.137(b) in that petitioner has supplied (1) the reply in the form of a Notice of Appeal and fee of $540.00; (2) the petition fee of $1,620.00; and (3) a proper statement of unintentional delay.

The two-month period for filing an appeal brief under 37 CFR 41.37 (accompanied by the fee required by 37 CFR 41.20(b)(2)), runs from the date of this decision.

Additionally, an extension of time under 37 CFR 1.136 must be filed prior to the expiration of the maximum extendable period for reply. *See* In re Application of S., 8 USPQ2d 1630, 1631 (Comm'r Pats. 1988). Since the $1,110.00, three- month extension of time fee submitted with the petition on January 8, 2009 was subsequent to the maximum extendable period for reply, this fee is unnecessary and will be refunded to petitioner's deposit account in due course.

Petitioner also submitted an additional $540.00 with the instant petition. As it is unnecessary, it will be refunded to petitioner's deposit account in due course.

Telephone inquiries concerning this decision should be directed to Joan Olszewski at (571) 272-7751.

This application is being referred to Technology Center AU 1617 to await the filing of an appeal brief or for such other appropriate reply as may be submitted to continue prosecution of the application.

/Liana Walsh/
Liana Walsh
Petitions Examiner
Office of Petitions

Attorney's Reference Number: 1360-001/ddh

IN THE UNITED STATES PATENT AND TRADEMARK OFFICE

Application No.: 10/816,664
Applicant: Robert C. Otterson
Filed: April 1, 2004
Examiner: EL ARINI, Zeinab
Art Unit: 1746

RECEIVED
CENTRAL FAX CENTER
APR 18 2006

Commissioner for Patents
Alexandria, Virginia 22313-1450

Petition to Make Special: Accelerated Examination

37 C.F.R. §1.102(c)

Sir,

Applicant hereby petitions under 37 C.F.R §1.102(c) for accelerated examination of this application on the basis of Applicant's age. A petition fee is not required for this petition because it is being filed under § 1.102(c).

The Applicant is Robert C. Otterson. As detailed by in the Declaration that is filed herewith in support of this petition, Mr. Otterson is 73 years of age.

The application was filed over 2 years ago. On March 10, 2006 Applicant filed a Status Inquiry letter. In a response from the Patent Office dated March 17, 2006, it was estimated that a first Office action would be received in "approximately 9 months."

Under the circumstances, considering Applicant's age and the considerable delay in examining the application, it is appropriate to accelerate examination in this case and such action is respectfully requested.

Thank you for your consideration.

Respectfully submitted,

April 18, 2006

Douglas D. Hancock
Registration No. 35,889

ipsolon llp
111 S.W. Columbia
Suite 710
Portland, Oregon 97201
phone: (541) 549-4942
cc: Robert Otterson

PETITION GRANTED

William Krynski,
Special Program Examiner
Technology Center 1700
MAY 1 2006

PAGE 2/3 * RCVD AT 4/18/2006 3:08:22 PM [Eastern Daylight Time] * SVR:USPTO-EFXRF-6/43 * DNIS:2738300 * CSID:541549

UNITED STATES PATENT AND TRADEMARK OFFICE

Commissioner for Patents
United States Patent and Trademark Office
P.O. Box 1450
Alexandria, VA 22313-1450
www.uspto.gov

PATENT LAW & VENTURE GROUP
2424 S.E. BRISTOL, SUITE 300
NEWPORT BEACH CA 92660

MAILED

AUG 11 2009

OFFICE OF PETITIONS

In re Application of	:	
Anthony FASANELLA	:	
Application No. 10/816,684	:	DECISION ON PETITION
Filed: April 01, 2004	:	
Attorney Docket No. **Fasane.A-01**	:	

This is a decision on the petition under the unintentional provisions of 37 CFR 1.137(b), filed May 27, 2009, to revive the above-identified application.

The petition is **GRANTED**.

The application became abandoned for failure to reply in a timely manner to the non-final Office action mailed, February 25, 2008, which set a shortened statutory period for reply of three (3) months. No extensions of time under the provisions of 37 CFR 1.136(a) were obtained. Accordingly, the application became abandoned on May 26, 2008.

The petition satisfies the requirements of 37 CFR 1.137(b) in that petitioner has supplied (1) the reply in the form of an amendment, (2) the petition fee of $810, and (3) a proper statement of unintentional delay. Accordingly, the reply to the non-final Office February 25, 2008, is accepted as having been unintentionally delayed.

Telephone inquiries concerning this decision should be directed to Tredelle Jackson at (571) 272-2783.

This application is being referred to Technology Center AU 3633 for appropriate action on the concurrently filed amendment.

Ramesh Krishnamurthy

Ramesh Krishnamurthy
Petitions Examiner
Office of Petitions

UNITED STATES PATENT AND TRADEMARK OFFICE

UNITED STATES DEPARTMENT OF COMMERCE
United States Patent and Trademark Office
Address: COMMISSIONER FOR PATENTS
P.O. Box 1450
Alexandria, Virginia 22313-1450
www.uspto.gov

MEYERTONS, HOOD, KIVLIN, KOWERT & GOETZEL (AMD)
P.O. BOX 398
AUSTIN, TX 78767-0398

Mail Date: 04/20/2010

Applicant	: Uwe Eckhardt	: DECISION ON REQUEST FOR
Patent Number	: 7627747	: RECALCULATION of PATENT
Issue Date	: 12/01/2009	: TERM ADJUSTMENT IN VIEW
Appliction No	: 10/816,687	: OF WYETH AND NOTICE OF INTENT TO
Filed	: 04/02/2004	: ISSUE CERTIFICATE OF CORRECTION
		:

The Request for Recalculation is **GRANTED** to the extent indicated.

The patent term adjustment has been determined to be **883** days. The USPTO will *sua sponte* issue a certificate of correction reflecting the amount of PTA days determined by the recalculation.

Prior to the issuance of the certificate of correction, the USPTO will afford patentee an opportunity to be heard and request reconsideration. Accordingly, patentee has **one month or thirty (30) days**, whichever is longer, to file a request for reconsideration of this patent term adjustment calculation. See 35 U.S.C. 154(b)(3)(B)(ii) and 37 CFR 1.322(a)(4). No extensions of time will be granted under 37 CFR 1.136.

Patentee should use document code PET.OP if electronically filing a request for reconsideration of this patent term adjustment calculation. The patentee must also include the information required by 37 CFR 1.705(b)(2) and the fee required by 37 CFR 1.18(e). If patentee does not file a timely request for reconsideration of this patent term adjustment calculation including the information required by 37 CFR 1.705(b)(2) and the fee required by 37 CFR 1.18(e), the USPTO will issue a certificate of correction reflecting the PTA determination noted above.

Patentee should be aware that in order to preserve the right to review in the United States District Court for the District of Columbia of the USPTO patent term adjustment determination, patentee must ensure that he or she also take the steps required under 35 U.S.C. 154(b)(4)(A) in a timely manner. Nothing in the request for recalculation should be construed as providing an alternative time frame for commencing a civil action under 35 U.S.C. 154(b)(4)(A).

Any questions concerning this decision should be directed to the Office of Patent Legal Administration at 571-272-7702.

UNITED STATES PATENT AND TRADEMARK OFFICE

UNITED STATES DEPARTMENT OF COMMERCE
United States Patent and Trademark Office
Address: COMMISSIONER FOR PATENTS
P.O. Box 1450
Alexandria, Virginia 22313-1450
www.uspto.gov

GENERAL ELECTRIC COMPANY
GLOBAL RESEARCH
ONE RESEARCH CIRCLE
PATENT DOCKET RM. BLDG. K1-4A59
NISKAYUNA, NY 12309

Mail Date: 05/04/2010

Applicant	: Richard Scott Bourgeois	: DECISION ON REQUEST FOR
Patent Number	: 7632595	: RECALCULATION of PATENT
Issue Date	: 12/15/2009	: TERM ADJUSTMENT IN VIEW
Application No	: 10/816,697	: OF WYETH AND NOTICE OF INTENT TO
Filed	: 04/05/2004	: ISSUE CERTIFICATE OF CORRECTION
		:

The Request for Recalculation is **GRANTED** to the extent indicated.

The patent term adjustment has been determined to be **706** days. The USPTO will *sua sponte* issue a certificate of correction reflecting the amount of PTA days determined by the recalculation.

Prior to the issuance of the certificate of correction, the USPTO will afford patentee an opportunity to be heard and request reconsideration. Accordingly, patentee has **one month or thirty (30) days**, whichever is longer, to file a request for reconsideration of this patent term adjustment calculation. See 35 U.S.C. 154(b)(3)(B)(ii) and 37 CFR 1.322(a)(4). No extensions of time will be granted under 37 CFR 1.136.

Patentee should use document code PET.OP if electronically filing a request for reconsideration of this patent term adjustment calculation. The patentee must also include the information required by 37 CFR 1.705(b)(2) and the fee required by 37 CFR 1.18(e). If patentee does not file a timely request for reconsideration of this patent term adjustment calculation including the information required by 37 CFR 1.705(b)(2) and the fee required by 37 CFR 1.18(e), the USPTO will issue a certificate of correction reflecting the PTA determination noted above.

Patentee should be aware that in order to preserve the right to review in the United States District Court for the District of Columbia of the USPTO patent term adjustment determination, patentee must ensure that he or she also take the steps required under 35 U.S.C. 154(b)(4)(A) in a timely manner. Nothing in the request for recalculation should be construed as providing an alternative time frame for commencing a civil action under 35 U.S.C. 154(b)(4)(A).

Any questions concerning this decision should be directed to the Office of Patent Legal Administration at 571-272-7702.

UNITED STATES PATENT AND TRADEMARK OFFICE

MAILED
FROM DIRECTOR'S OFFICE

JUL 03 2006

TECHNOLOGY CENTER 3600

Commissioner for Patents
United States Patent and Trademark Office
P.O. Box 1450
Alexandria, VA 22313-1450
www.uspto.gov

Christopher J. Fildes
Fildes & Outland, P.C.
Suite 2
20916 Mack Avenue
Grosse Pointe Woods, MI 48236

In re Application of:	:	
Bevan, Michael J. et.al.	:	NOTICE OF WITHDRAWAL
Application No. 10/816,701	:	FROM ISSUE
Filed: April 2, 2004	:	UNDER 37 CFR § 1.313(b)
Attorney Docket No. 09004.004	:	

The above-identified application is withdrawn from issue due to reopening for prosecution. 37 CFR § 1.313

The above-identified application is hereby withdrawn from issue.

The issue fee and publication fee are refundable upon written request. Applicant may also request that the fee be credited to a specified Deposit Account. Applicant may, however, wait until such time as the application is either allowed or abandoned to make such request. If the application is subsequently allowed, upon receipt of a new Notice of Allowance and Issue and Publication Fee Due, applicant may further request that the previously submitted issue fee and publication fee be applied toward payment of the issue fee and publication fee in the amount identified in the new Notice of Allowance and Issue and Publication Fee Due. This request, and any balance due, must be received on or before the due date noted in the new Notice of Allowance and Issue and Publication Fee Due in order to prevent abandonment of the application. If the application is abandoned, applicant may request either a refund or a credit to a specified Deposit Account.

Telephone inquires should be directed to Supervisory Patent Examiner Peter Cuomo (571)-272-6856.

The above-identified application is being forwarded to the examiner for prompt appropriate action, including notifying applicant of the new status of this application.

Wynn W. Coggins, Director,
Technology Center 3600

cc: Office of Patent Publication: Office of Patent Publication

UNITED STATES PATENT AND TRADEMARK OFFICE

Commissioner for Patents
United States Patent and Trademark Office
P.O. Box 1450
Alexandria, VA 22313-1450
www.uspto.gov

ISIDORO NATALIO MARKUS
3117 FAYETTE ROAD
KENSINGTON, MD 20895

COPY MAILED

OCT 26 2005

OFFICE OF PETITIONS

In re Application of	:	
isidoro natalio markus	:	
Application No. 10/816,716	:	ON PETITION
Filed: April 5, 2004	:	
For: Reclinable Chair Mechanism	:	

This is a decision on the petition under 37 CFR 1.137(b), filed October 5, 2005, to revive the above-identified application.

The petition is **DISMISSED AS MOOT**.

the above-identified application was held abandoned for failure to reply in a timely manner to the non-final Office mailed February 22, 2005, which set a shortened statutory period for reply of three (3) months.

Petitioner stated in the petition that a reply was filed on May 2005. A review of the file record discloses that a reply was received on May 3, 2005. Therefore, the petition to revive was prematurely filed and is dismissed as involving a moot issue.

Telephone inquiries concerning this decision should be directed to Wan Laymon at (571) 272-3220.

This matter is being referred to Technology Center AU 3636.

Wan Laymon
Petitions Examiner
Office of Petitions

UNITED STATES PATENT AND TRADEMARK OFFICE

Commissioner for Patents
United States Patent and Trademark Office
P.O. Box 1450
Alexandria, VA 22313-1450
www.uspto.gov

BOZICEVIC, FIELD & FRANCIS LLP
1900 UNIVERSITY AVENUE
SUITE 200
EAST PALO ALTO CA 94303

COPY MAILED
AUG 17 2006
OFFICE OF PETITIONS

In re Application of
Roeland Nusse et al. :
Application No. 10/816,720 : ON PETITION
Filed: April 1, 2004 :
Attorney Docket No. STAN-299 :

This is a decision on the petition under 37 CFR 1.137(b), filed March 28, 2006, to revive the above identified application.

The petition is **GRANTED**.

This application became abandoned for failure to timely reply to the Final Office Action mailed September 20, 2005. A shortened statutory period of three months was set for replying Final Office Action. A one month extension of time request and an amendment were filed on January 17, 2006 however, the response did not place the application in condition for allowance. Prior to the mailing of the Advisory Action, mailed April 18, 2006, and prior to the mailing of the Notice of Abandonment, the instant petition was filed.

Petitioner files the instant petition and request for continued examination under 37 CFR 1.137(b). [1]

---

[1]Effective December 1, 1997, the provisions of 37 CFR 1.137(b) now provide that where the delay in reply was unintentional, a petition may be filed to revive an abandoned application or a lapsed patent pursuant to 37 CFR 1.137(b). A grantable petition filed under the provisions of 37 CFR 1.137(b) must be accompanied by:

(1) the required reply, unless previously filed. In a nonprovisional application abandoned for failure to prosecute, the required reply may be met by the filing of a continuing application. In an application or patent, abandoned or lapsed for failure to pay the issue fee or any portion thereof, the required reply must be the payment of the issue fee or any outstanding balance thereof.

(2) the petition fee as set forth in 37 CFR 1.17(m);

(3) a statement that the entire delay in filing the required reply from the due date for the reply until the filing of a grantable petition pursuant to 37 CFR 1.137(b) was unintentional. The Commissioner may required additional information where there is a question whether the delay was unintentional; and

(4) any terminal disclaimer (and fee as set forth in 37 CFR 1.20(d)) required pursuant to 37 CFR 1.137(c)).

In response to the Final Office Action mailed April 18, 2005, petitioner has submitted a Request for Continued Examination (RCE) and an amendment as the submission required under 37 CFR 1.114.

The petition fee in the amount of $750.00 has been charged to deposit account no. 50-0815.

This matter is being referred to Technology Center 1654 for processing of the RCE and submission.

Telephone inquiries related to this decision should be directed to the undersigned Petitions Attorney at (571) 272-3212.

Patricia Faison-Ball

Patricia Faison-Ball
Senior Petitions Attorney
Office of Petitions

UNITED STATES PATENT AND TRADEMARK OFFICE

UNITED STATES DEPARTMENT OF COMMERCE
United States Patent and Trademark Office
Address: COMMISSIONER FOR PATENTS
P.O. Box 1450
Alexandria, Virginia 22313-1450
www.uspto.gov

WOOD, HERRON & EVANS, LLP
2700 CAREW TOWER
441 VINE STREET
CINCINNATI, OH 45202

Mail Date: 04/21/2010

Applicant	: Lawrence M. Lubbers	: DECISION ON REQUEST FOR
Patent Number	: 7611521	: RECALCULATION of PATENT
Issue Date	: 11/03/2009	: TERM ADJUSTMENT IN VIEW
Appliction No	: 10/816,725	: OF WYETH AND NOTICE OF INTENT TO
Filed	: 04/02/2004	: ISSUE CERTIFICATE OF CORRECTION
		:

The Request for Recalculation is **GRANTED** to the extent indicated.

The patent term adjustment has been determined to be **1376** days. The USPTO will *sua sponte* issue a certificate of correction reflecting the amount of PTA days determined by the recalculation.

Prior to the issuance of the certificate of correction, the USPTO will afford patentee an opportunity to be heard and request reconsideration. Accordingly, patentee has **one month or thirty (30) days**, whichever is longer, to file a request for reconsideration of this patent term adjustment calculation. See 35 U.S.C. 154(b)(3)(B)(ii) and 37 CFR 1.322(a)(4). No extensions of time will be granted under 37 CFR 1.136.

Patentee should use document code PET.OP if electronically filing a request for reconsideration of this patent term adjustment calculation. The patentee must also include the information required by 37 CFR 1.705(b)(2) and the fee required by 37 CFR 1.18(e). If patentee does not file a timely request for reconsideration of this patent term adjustment calculation including the information required by 37 CFR 1.705(b)(2) and the fee required by 37 CFR 1.18(e), the USPTO will issue a certificate of correction reflecting the PTA determination noted above.

Patentee should be aware that in order to preserve the right to review in the United States District Court for the District of Columbia of the USPTO patent term adjustment determination, patentee must ensure that he or she also take the steps required under 35 U.S.C. 154(b)(4)(A) in a timely manner. Nothing in the request for recalculation should be construed as providing an alternative time frame for commencing a civil action under 35 U.S.C. 154(b)(4)(A).

Any questions concerning this decision should be directed to the Office of Patent Legal Administration at 571-272-7702.

UNITED STATES PATENT AND TRADEMARK OFFICE

Commissioner for Patents
United States Patent and Trademark Office
P.O. Box 1450
Alexandria, VA 22313-1450
www.uspto.gov

COPY MAILED

MAR 30 2007

OFFICE OF PETITIONS

LINDA J. THAYER
FINNEGAN, HENDERSON, FARABOW,
GARRETT & DUNNER, LLP
901 NEW YORK AVENUE, NW
WASHINGTON, DC 20001-4413

RECEIVED
CANCELLED
MAR 30 2007
OFFICE OF PETITIONS

In re Application of	
Guy W. W. McNalley et al.	
Application No. 10/816,737	DECISION ON PETITION
Filed: April 1, 2004	TO WITHDRAW
Attorney Docket No. 09208.0011-00000	FROM RECORD

This is a decision on the Request to Withdraw as attorney or agent of record under 37 C.F.R. § 1.36(b), filed November 2, 2006.

The request is **NOT APPROVED** as moot.

A review of the file record indicates that the power of attorney to Linda J. Thayer and all attorneys from the firm Finnegan, Henderson, Farabow, Garrett & Dunner, LLP has been revoked by the assignee, Pinnacle Systems, Inc. of the patent application on January 31, 2007. Accordingly, the request to withdraw under 37 C.F.R. § 1.36(b) is moot.

Applicant is advised that a non-final rejection setting a 3 month shortened statutory period was mailed January 11, 2007. Extensions of time are available under the provisions of 37 CFR 1.136(a). Failure to timely reply within the period set will result in the abandonment of this application.

All future communications from the Office will continue to be directed to the below-listed address until otherwise notified by applicant.

Telephone inquires concerning this decision should be directed to Kimberly Inabinet at 571-272- 4618.

Frances Hicks
Petitions Examiner
Office of Petitions

cc:

Peter J. Gordon
Avid Technology, Inc.
One Park West
Tewksbury, MA 01876

UNITED STATES PATENT AND TRADEMARK OFFICE

Commissioner for Patents
United States Patent and Trademark Office
P.O. Box 1450
Alexandria, VA 22313-1450
www.uspto.gov

MILLIPORE CORPORATION
290 CONCORD ROAD
BILLERICA, MA 01821

COPY MAILED

NOV 02 2004

OFFICE OF PETITIONS

In re Application of :
Gaston de los Reyes et al :
Application No. 10/816,754 :
Filed: April 2, 2004 :
Attorney Docket No. MCA-636 US :

ON PETITION

This is a decision on the petition under 37 CFR 1.182, filed July 22, 2004, to change the order of inventorship.

The petition is **granted.**

Telephone inquiries concerning this matter may be directed to Irvin Dingle at (571) 272-3210.

Irvin Dingle
Petitions Examiner
Office of Petitions
Office of the Deputy Commissioner
for Patent Examination Policy

Attachment: Corrected Filing Receipt

UNITED STATES PATENT AND TRADEMARK OFFICE

Commissioner for Patents
United States Patent and Trademark Office
P.O. Box 1450
Alexandria, VA 22313-1450
www.uspto.gov

MILLIPORE CORPORATION
290 CONCORD ROAD
BILLERICA MA 01821

COPY MAILED

OCT 21 2009

OFFICE OF PETITIONS

In re Application of
De Los Reyes et al.
Application No. 10/816,754
Filed: April 2, 2004
Attorney Docket No. MCA-636 US

ON PETITION

This is a decision on the petition under the unintentional provisions of 37 CFR 1.137(b), filed September 11, 2009, to revive the above-identified application.

The petition is **GRANTED**.

The application became abandoned for failure to timely file a reply within the meaning of 37 CFR 1.113 to the final Office action of October 20, 2008. The proposed reply required for consideration of a petition to revive must be a Notice of Appeal (and appeal fee required by 37 CFR 41.20(b)(2), an amendment that *prima facie* places the application in condition for allowance, a Request for Continued Examination and submission (37 CFR 1.114), or the filing of a continuing application under 37 CFR 1.53(b). See MPEP 711.03(c)(III)(A)(2). No timely extensions of time pursuant to the provisions of 37 CFR 1.136(a) was obtained. Accordingly, the date of abandonment of this application is January 21, 2009.

The petition satisfies the requirements of 37 CFR 1.137(b) in that petitioner has supplied (1) the reply in the form of a Request for Continued Examination (RCE) and fee of $810.00, and the submission required by 37 CFR 1.114; (2) the petition fee of $1620.00; and (3) a proper statement of unintentional delay.

An extension of time under 37 CFR 1.136 must be filed prior to the expiration of the maximum extendable period for reply. *See* In re Application of S., 8 USPQ2d 1630, 1631 (Comm'r Pats. 1988). Since the $1110.00 extension of time fee submitted with the petition on September 11, 2009 was subsequent to the maximum extendable period for reply. The fee will be refunded.

Telephone inquiries concerning this decision should be directed to the undersigned at (571) 272-3215.

This application is being referred to Technology Center AU 1795 for processing of the RCE and for appropriate action by the Examiner in the normal course of business on the amendment submitted in accordance with 37 CFR 1.114.

Charlema Grant
Petitions Attorney
Office of Petitions

UNITED STATES PATENT AND TRADEMARK OFFICE

Commissioner for Patents
United States Patent and Trademark Office
P.O. Box 1450
Alexandria, VA 22313-1450
www.uspto.gov

FLIESLER MEYER, LLP
Four Embarcadero Center, Fourth Floor
San Francisco, CA 94111

COPY MAILED

AUG 12 2005

OFFICE OF PETITIONS

In re Application of
EHRLICH, Richard M.
Application No.: 10/816,786
Filing Date: April 2, 2004
Docket No.: PANA-01096US1
For: VARIABLE FREQUENCY CHEVRON IN PRINTED MEDIA REFERENCE PATTERN TO IMPROVE SERVO DEMODULATION

DECISION

ON PETITION UNDER

37 CFR 1.137(b)

This is a decision on the petition to revive under 37 CFR 1.137(b) filed on May 31, 2005. The petition under 1.137(b) is hereby **GRANTED**.

The above-identified application became abandoned for failure to file a timely and proper reply to the Notice to File Missing Parts of Nonprovisional Application ("Notice") mailed June 21, 2004. The Notice required an oath or declaration in compliance with 37 CFR 1.63, the basic filing fee, and a surcharge fee. This Notice set a two (2) month period for reply, with extensions of time obtainable under 37 CFR 1.136(a).

Petitioner submitted a declaration in compliance with 37 CFR 1.63, the required filing fee, a surcharge fee, and the petition fee and made the required statement of unintentional delay. No terminal disclaimer is required. Accordingly, the petition is granted under 37 CFR1.137(b).

This application is being forwarded to the Office of Initial Patent Examination for continued processing.

James Thomson
Attorney Advisor
Office of PCT Legal Administration

Tel: 571-272-3302

Brian Hearn
Petitions Examiner
Office of Petitions

UNITED STATES PATENT AND TRADEMARK OFFICE

Commissioner for Patents
United States Patent and Trademark Office
P.O. Box 1450
Alexandria, VA 22313-1450
www.uspto.gov

COPY MAILED

APR 19 2007

OFFICE OF PETITIONS

MEDTRONIC, INC.
710 MEDTRONIC PARK
MINNEAPOLIS MN 55432-9924

In re Application of	:	
Joachim Hossick-Schott	:	
Application No. 10/816,795	:	ON PETITION
Filed: April 2, 2004	:	
Attorney Docket No. P-11079.00	:	

This is a decision on the petition under 37 CFR 1.137(b), filed November 1, 2006, to revive the above-identified application.

The petition is **GRANTED**.

The application became abandoned for failure s to timely pay the issue and publication fees on or before October 31, 2006, as required by the Notice of Allowance and Fee(s) Due, mailed July 31, 2006, which set a statutory period for reply of three (3) months. Accordingly, the application became abandoned on November 1, 2006.

The petition satisfies the requirements of 37 CFR 1.137(b) in that petitioner has supplied (1) the reply in the form of the issue and publication fees; (2) the petition fee of $1500; and (3) an adequate statement of unintentional delay.

Telephone inquiries concerning this decision should be directed to Terri Williams at (571) 272-2991.

The application file is being referred to the Office of Publication for processing into a patent.

Liana Walsh
Petitions Examiner
Office of Petitions

UNITED STATES PATENT AND TRADEMARK OFFICE

Commissioner for Patents
United States Patent and Trademark Office
P.O. Box 1450
Alexandria, VA 22313-1450
www.uspto.gov

MATTINGLY, STANGER, MALUR & BRUNDIDGE, P.C.
1800 DIAGONAL ROAD
SUITE 370
ALEXANDRIA, VA 22314

MAILED

MAR 2 3 2006

TECHNOLOGY CENTER 2100

In re Application of: Honda, et al.
Application No. 10/816,816
Filed: April 5, 2004
For: JOB NETWORK CONFIGURATION FILE CREATING DEVICE AND CREATING METHOD

DECISION ON PETITION TO MAKE SPECIAL (ACCELERATED EXAMINATION) UNDER M.P.E.P. §708.02 (VIII)

This is a decision on the petition to make special under 37 C.F.R. §102(d) and M.P.E.P. §708.02(VIII): Accelerated Examination, filed on June 16, 2005.

The Petition is **GRANTED**.

M.P.E.P. §708.02, Section VIII which sets out the prerequisites for a grantable petition for Accelerated Examination under 37 C.F.R. §1.102(d) states in relevant part:

A new application (one which has not received any examination by the examiner) may be granted special status provided that applicant (and this term includes applicant's attorney or agent) complies with each of the following items:

(a) Submits a petition to make special accompanied by the fee set forth in 37 CFR 1.17(h);

(b) Presents all claims directed to a single invention, or if the Office determines that all the claims presented are not obviously directed to a single invention, will make an election without traverse as a prerequisite to the grant of special status;

(c) Submits a statement(s) that a pre-examination search was made, listing the field of search by class and subclass, publication, Chemical Abstracts, foreign patents, etc. The pre-examination search must be directed to the invention as claimed in the application for which special status is requested. A search made by a foreign patent office satisfies this requirement;

(d) Submits one copy each of the references deemed most closely related to the subject matter encompassed by the claims if said references are not already of record; and

(e) Submits a detailed discussion of the references, which discussion points out, with the particularity required by 37 CFR 1.111 (b) and (c), how the claimed subject matter is patentable over the references.

Petition to Make Special **GRANTED** since all of the requirements for special status under MPEP § 708.02(VIII) have been met.

The application file is being forwarded to the Examiner for accelerated examination in accordance with M.P.E.P. §708.02, Section VIII. If the application is subsequently allowed, it will be given priority for printing. See M.P.E.P. §1309.

Brian L. Johnson
Special Program Examiner
Technology Center 2100
Computer Architecture, Software and Information Security
571-272-3595

UNITED STATES PATENT AND TRADEMARK OFFICE

COMMISSIONER FOR PATENTS
UNITED STATES PATENT AND TRADEMARK OFFICE
P.O. BOX 1450
ALEXANDRIA, VA 22313-1450
www.uspto.gov

NIKOLAI & MERSEREAU, P.A.
900 SECOND AVENUE SOUTH
SUITE 820
MINNEAPOLIS, MN 55402

COPY MAILED

FEB 14 2007

OFFICE OF PETITIONS

In re Application of
LIN et al
Application No.: 10/816,819
Filing Date: April 5, 2004
Attorney Docket No.: LINC3187/EM [PUSA060744 (20061143.ORI)]

DECISION ON PETITION UNDER 37 CFR 1.137(B)

This is a decision on the petition under 37 CFR 1.137(b), filed November 24, 2006, to revive the above-identified application.

The petition is **GRANTED.**

The above-identified application became abandoned for failure to reply in a timely manner to the *Ex parte Quayle* Office action mailed November 25, 2005, which set a two (2) month shortened statutory period for response. No extensions of time under the provisions of 37 CFR 1.136(a) were obtained. Accordingly, by operation of law, the above-identified application became abandoned on January 26, 2006.

The petition satisfies the conditions for revival pursuant to the provisions of 37 CFR 1.137(b) in that (1) the reply in the form of an amendment; (2) the petition fee; and (3) the required statement of unintentional delay have been received. Accordingly, the reply to the *Ex parte Quayle* Office action mailed November 25, 2005 is accepted as having been unintentionally delayed.

Applicant is advised that it is not apparent whether the person signing the statement of unintentional delay was in a position to have firsthand or direct knowledge of the facts and circumstances of the delay at issue. Nevertheless, such statement is being treated as having been made as the result of a reasonable inquiry into the facts and circumstances of such delay. See 37 CFR 10.18(b) and Changes to Patent Practice and Procedure, Final Rule Notice, 62 Fed. Reg. 53131, 53178 (October 10, 1997), 1203 Off. Gaz. Pat. Office 63, 103 (October 21, 1997). In the event that such an inquiry has not been made, petitioner must make such an inquiry. If such inquiry results in the discovery that it is not correct that the entire delay in filing the required reply from the due date for the reply until the filing of a grantable petition pursuant to 37 CFR 1.137(b) was unintentional, petitioner must notify the Office.

This application is being referred to Technology Center AU 3724 for appropriate action on the reply in due course.

Telephone inquiries concerning this decision should be directed to the undersigned at (571) 272-3303.

Bryan Lin

Bryan Lin
Legal Examiner
Office of the Deputy Commissioner
for Patent Examination Policy

UNITED STATES PATENT AND TRADEMARK OFFICE

Commissioner for Patents
United States Patent and Trademark Office
P.O. Box 1450
Alexandria, VA 22313-1450
www.uspto.gov

BURNS DOANE SWECKER & MATHIS LLP
POST OFFICE BOX 1404
ALEXANDRIA VA 22313-1404

COPY MAILED

JUL 21 2004

OFFICE OF PETITIONS

In re Application of	:
Bentley and McCabe	:
Application No. 10/816,832	: DECISION ACCORDING STATUS
Filed: April 15, 2004	: UNDER 37 CFR 1.47(a)
Attorney Docket No. 015291-144	:
For: Method and Apparatus for	:
Adjusting a Slump in Washing	:
Concrete Mixing Trucks	:

This is in response to the petition under 37 CFR 1.47(a), filed June 16, 2004.

The petition is granted.

Petitioner has shown that Stuart Bentley, the non-signing inventor, has refused to join in the filing of the above-identified application after having been presented with the application papers. Specifically, the statement of facts of William C. Rowland establishes that the inventor was mailed the application papers, including the specification, claims and drawings, but failed to respond to the request that he sign the declaration.

The above-identified application and papers have been reviewed and found in compliance with 37 CFR 1.47(a). This application is hereby accorded Rule 1.47(a) status.

As provided in Rule 1.47(c), this Office will forward notice of this application's filing to the non-signing inventor at the address given in the present petition. Notice of the filing of this application will also be published in the Official Gazette.

The application file is being returned to the Office of Initial Patent Examination for further processing.

Telephone inquiries regarding this decision should be directed to the undersigned at (703) 306-5589.

Christina Tartera Donnell

Christina Tartera Donnell
Senior Petitions Attorney
Office of Petitions

UNITED STATES PATENT AND TRADEMARK OFFICE

Commissioner for Patents
United States Patent and Trademark Office
P.O. Box 1450
Alexandria, VA 22313-1450
www.uspto.gov

COPY MAILED
AUG 30 2006
OFFICE OF PETITIONS

Liniak, Berenato & White
6550 Rock Spring Drive, Suite. 240
Bethesda MD 20817

In re Application of	:	
TATAEI	:	
Application No. 10/816,833	:	DECISION ON PETITION
Filed: April 5, 2004	:	TO WITHDRAW
Attorney Docket No. 5257.001	:	FROM RECORD
	:	

This is a decision on the Request to Withdraw as attorney or agent of record under 37 C.F.R. § 1.36(b), filed January 5, 2006.

The request is **APPROVED**.

A grantable request to withdraw as attorney/agent of record must be signed by every attorney/agent seeking to withdraw or contain a clear indication that one attorney is signing on behalf of another/others. A request to withdraw will not be approved unless at least 30 (thirty) days would remain between the date of approval and the later of the expiration date of a time to file a response or the expiration date of the maximum time period which can be extended under 37 C.F.R. § 1.136(a).

The request was signed by Thomas P. Liniak. Thomas P. Liniak has been withdrawn as attorney or agent of record; all other attorneys remain of record. The correspondence address of record remains unchanged.

Telephone inquiries concerning this decision should be directed to Monica A. Graves at 571-272-7253.

Diana Chase for
Amelia Au
Petitions Examiner
Office of Petitions

UNITED STATES PATENT AND TRADEMARK OFFICE

Commissioner for Patents
United States Patent and Trademark Office
P.O. Box 1450
Alexandria, VA 22313-1450
www.uspto.gov

BLANK ROME LLP
600 NEW HAMPSHIRE AVENUE, N.W.
WASHINGTON DC 20037

COPY MAILED

JAN 12 2009

In re Application of	:	
KELLER, William W. et al.	:	
Application No. 10/816,850	:	DECISION ON PETITION
Filed: April 05, 2004	:	TO WITHDRAW
Attorney Docket No. **119544-00101**	:	FROM RECORD
	:	

This is a decision on the Request to Withdraw as attorney or agent of record under 37 C.F.R. § 1.36(b), filed November 14, 2008.

The request is **APPROVED**.

A grantable request to withdraw as attorney/agent of record must be signed by every attorney/agent seeking to withdraw or contain a clear indication that one attorney is signing on behalf of another/others. The Office requires the practitioner(s) requesting withdrawal to certify that he, she, or they have: (1) given reasonable notice to the client, prior to the expiration of the response period, that the practitioner(s) intends to withdraw from employment; (2) delivered to the client or a duly authorized representative of the client all papers and property (including funds) to which the client is entitled; and (3) notified the client of any responses that may be due and the time frame within which the client must respond, pursuant 37 CFR 10.40(c).

The request was signed by Minh-Quan K. Pham on behalf of all attorneys of record who are associated with customer No. 27557. All attorneys/agents associated have been withdrawn. Applicant is reminded that there is no attorney of record at this time.

All future correspondence will be directed to the first named inventor William W. Keller at the address indicated below.

Telephone inquiries concerning this decision should be directed to Michelle R. Eason at 571-272-4231.

Michelle R. Eason
Paralegal Specialist
Office of Petitions

cc: **WILLIAM KELLER**
1150 EARNHEART ROAD
BATESVILLE, AR 72501

UNITED STATES PATENT AND TRADEMARK OFFICE

Commissioner for Patents
United States Patent and Trademark Office
P.O. Box 1450
Alexandria, VA 22313-1450
www.uspto.gov

Jack Paavila
Box 1151
Alexandria, Koc IA0
Canada

COPY MAILED

AUG 0 1 2006

OFFICE OF PETITIONS

In re Application of	:	
Alain Poupart et al.	:	
Application No. 10/816,859	:	DECISION ON PETITION
Filed: April 5, 2004	:	TO WITHDRAW
Attorney Docket No. 250-1US	:	FROM RECORD
	:	

This is a decision on the Request to Withdraw as attorney or agent of record under 37 C.F.R. § 1.36(b), filed January 3, 2006.

The request is **APPROVED**.

A grantable request to withdraw as attorney/agent of record must be signed by every attorney/agent seeking to withdraw or contain a clear indication that one attorney is signing on behalf of another/others. A request to withdraw will not be approved unless at least 30 (thirty) days would remain between the date of approval and the later of the expiration date of a time to file a response or the expiration date of the maximum time period which can be extended under 37 C.F.R. § 1.136(a).

The request was signed by Jack Paavila, the sole attorney of record.

Jack Paavila has been withdrawn as attorneys or agents of record; all other attorneys remain of record.

Applicant is reminded that there is no attorney of record at this time.

All future correspondence will be directed to the first named inventor Alain Poupart at the address indicated below.

There is no outstanding Office action at this time.

Telephone inquiries concerning this decision should be directed to Terri Williams at 571-272-2991.

David Bucci
Petitions Examiner
Office of Petitions

cc: Alain Poupart
271 Rue Letourneau
St-Constant, QCJ5A 2A6
Canada

UNITED STATES PATENT AND TRADEMARK OFFICE

UNITED STATES DEPARTMENT OF COMMERCE
United States Patent and Trademark Office
Address: COMMISSIONER FOR PATENTS
P.O. Box 1450
Alexandria, Virginia 22313-1450
www.uspto.gov

APPLICATION NUMBER	FILING OR 371 (c) DATE	FIRST NAMED APPLICANT	ATTY. DOCKET NO./TITLE
10/816,859	04/05/2004	Alain Poupart	250-1US

CONFIRMATION NO. 1827

OC000000019735571

OC000000019735571

05568
JACK PAAVILA
BOX 1151
ALEXANDRIA, KOC IA0
CANADA

Date Mailed: 07/24/2006

NOTICE REGARDING CHANGE OF POWER OF ATTORNEY

This is in response to the Power of Attorney filed 01/03/2006.

- The withdrawal as attorney in this application has been accepted. Future correspondence will be mailed to the new address of record. 37 CFR 1.33.

TERRI S WILLIAMS
OP (571) 272-2991

FORMER ATTORNEY/AGENT COPY

UNITED STATES PATENT AND TRADEMARK OFFICE

UNITED STATES DEPARTMENT OF COMMERCE
United States Patent and Trademark Office
Address: COMMISSIONER FOR PATENTS
P.O. Box 1450
Alexandria, Virginia 22313-1450
www.uspto.gov

MENDELSOHN, DRUCKER, & ASSOCIATES, P.C.
1500 JOHN F. KENNEDY BLVD., SUITE 405
PHILADELPHIA, PA 19102

Mail Date: 05/19/2010

Applicant	: Steven E. Strauss	: DECISION ON REQUEST FOR
Patent Number	: 7642672	: RECALCULATION of PATENT
Issue Date	: 01/05/2010	: TERM ADJUSTMENT IN VIEW
Application No	: 10/816,877	: OF WYETH AND NOTICE OF INTENT TO
Filed	: 04/05/2004	: ISSUE CERTIFICATE OF CORRECTION
		:

The Request for Recalculation is **GRANTED** to the extent indicated.

The patent term adjustment has been determined to be **782** days. The USPTO will *sua sponte* issue a certificate of correction reflecting the amount of PTA days determined by the recalculation.

Prior to the issuance of the certificate of correction, the USPTO will afford patentee an opportunity to be heard and request reconsideration. Accordingly, patentee has **one month or thirty (30) days**, whichever is longer, to file a request for reconsideration of this patent term adjustment calculation. See 35 U.S.C. 154(b)(3)(B)(ii) and 37 CFR 1.322(a)(4). No extensions of time will be granted under 37 CFR 1.136.

Patentee should use document code PET.OP if electronically filing a request for reconsideration of this patent term adjustment calculation. The patentee must also include the information required by 37 CFR 1.705(b)(2) and the fee required by 37 CFR 1.18(e). If patentee does not file a timely request for reconsideration of this patent term adjustment calculation including the information required by 37 CFR 1.705(b)(2) and the fee required by 37 CFR 1.18(e), the USPTO will issue a certificate of correction reflecting the PTA determination noted above.

Patentee should be aware that in order to preserve the right to review in the United States District Court for the District of Columbia of the USPTO patent term adjustment determination, patentee must ensure that he or she also take the steps required under 35 U.S.C. 154(b)(4)(A) in a timely manner. Nothing in the request for recalculation should be construed as providing an alternative time frame for commencing a civil action under 35 U.S.C. 154(b)(4)(A).

Any questions concerning this decision should be directed to the Office of Patent Legal Administration at 571-272-7702.

UNITED STATES PATENT AND TRADEMARK OFFICE

UNITED STATES DEPARTMENT OF COMMERCE
United States Patent and Trademark Office
Address: COMMISSIONER FOR PATENTS
P.O. Box 1450
Alexandria, Virginia 22313-1450
www.uspto.gov

APPLICATION NO.	FILING DATE	FIRST NAMED INVENTOR	ATTORNEY DOCKET NO.	CONFIRMATION NO.
10/816,879	04/05/2004	Michio Horiuchi	300.1153	2665

21171 7590 11/10/2008
STAAS & HALSEY LLP
SUITE 700
1201 NEW YORK AVENUE, N.W.
WASHINGTON, DC 20005

EXAMINER
WALKER, KEITH D

ART UNIT	PAPER NUMBER
1795	

MAIL DATE	DELIVERY MODE
11/10/2008	PAPER

Please find below and/or attached an Office communication concerning this application or proceeding.

The time period for reply, if any, is set in the attached communication.

UNITED STATES PATENT AND TRADEMARK OFFICE

Commissioner for Patents
United States Patent and Trademark Office
P.O. Box 1450
Alexandria, VA 22313-1450
www.uspto.gov

wk

Mailed: 11-10-08

In re application of	:	
Michio Horiuchi et al.	:	DECISION ON
Serial No. 10/816,879	:	PETITION
Filed: April 5, 2004	:	
For: Fuel Cell Device	:	

This is a decision on the PETITION UNDER 37 CFR 1.181 to the Group Director for withdrawal of the finality as the action is incomplete. The Office Action in question was mailed out on August 1, 2008.

On November 3, 2008, the instant petition under 37 CFR 1.181 was filed.

DECISION

Rule 1.181, Section (f) states:
§ 1.181 Petition to the Commissioner.

(f) Any petition under this part not filed within two months of the mailing date of the action or notice from which relief is requested may be dismissed as untimely, except as otherwise provided. This two-month period is not extendable

Accordingly, the instant petition is **DISMISSED.**

Jacqueline M. Stone/wk

Jacqueline M. Stone, Director
Technology Center 1700
Chemical and Materials Engineering

Michelle M. Koeth
STAAS & HALSEY LLP
SUITE 700
1201 NEW YORK AVENUE, N.W.
WASHINGTON DC 20005

UNITED STATES PATENT AND TRADEMARK OFFICE

Commissioner for Patents
United States Patent and Trademark Office
P.O. Box 1450
Alexandria, VA 22313-1450
www.uspto.gov

Keil & Weinkauf
1350 Connecticut Ave., N.W.
Washington, DC 20036

COPY MAILED

OCT 1 8 2005

OFFICE OF PETITIONS

In re Application of :
Koehle et al. :
Application No. 10/816,905 : DECISION ON PETITION
Filed: September 30, 2004 :
Attorney Docket No. 51360 :

This is a decision on the petition under 37 CFR 1.137(b), filed September 21, 2005, to revive the above-identified application.

This application became abandoned for failure to properly reply to the nonfinal Office action mailed December 15, 2004, which set a three-month shortened statutory period to respond. This application became abandoned on March 16, 2005. A Notice of Abandonment was mailed on July 1, 2005.

The petitioner has met the requirements to revive the above-identified application pursuant to 37 CFR 1.137(b). Accordingly, the petition is **granted**.

The application is being revived solely for purposes of continuity. As continuity has been established by this decision reviving the application, the application is again abandoned in favor of Application No. 11/230,454, filed September 21, 2005.

Upon reviewing the Declaration, there is no indication that Jason Voight was ever empowered to prosecute the present application. Therefore, Mr. Voight cannot change the correspondence address in the present application until petitioner submits the appropriate power of attorney documentation. As a one-time courtesy, the Office will mail a copy of this decision to the address listed on the petition.

Telephone inquiries concerning this matter may be directed to the undersigned at (571) 272-3211.

Christina Tartera Donnell

Christina Tartera Donnell
Senior Petitions Attorney
Office of Petitions

Novak Druce DeLuca & Quigg LLP
1300 Eye Street, N.W., Suite 400 East
Washington, DC 20005

UNITED STATES PATENT AND TRADEMARK OFFICE

Commissioner for Patents
United States Patent and Trademark Office
P.O. Box 1450
Alexandria, VA 22313-1450
www.uspto.gov

MATTINGLY, STANGER, MALUR &
BRUNDIDGE, P.C.
1800 Diagonal Road
Suite 370
Alexandria, VA 22314

MAILED

DEC 1 5 2005

Technology Center 2100

In re Application of:
H. MORIMOTO et al
Application No. 10/816,913
Filed: April 5, 2004
For: STORAGE UNIT, STORAGE UNIT CONTROL METHOD, AND STORAGE SYSTEM

DECISION ON PETITION TO MAKE SPECIAL

This is a decision on the petitions, filed on August 01, 2005 under 37 C.F.R. §102(d) and M.P.E.P. § 708.02(VIII): Accelerated Examination, to make the above-identified application special.

The petition is **GRANTED**.

M.P.E.P. § 708.02, Section VIII which sets out the prerequisites for a grantable petition for Accelerated Examination under 37 C.F.R. § 102(d) states in relevant part:

> A new application (one which has not received any examination by the examiner) may be granted special status provided that applicant (and this term includes applicant's attorney or agent) complies with each of the following items:
>
> (A) Submits a petition to make special accompanied by the fee set forth in 37 CFR 1.17(h);
>
> (B) Presents all claims directed to a single invention, or if the Office determines that all the claims presented are not obviously directed to a single invention, will make an election without traverse as a prerequisite to the grant of special status;
>
> (C) Submits a statement(s) that a pre-examination search was made, listing the field of search by class and subclass, publication, Chemical Abstracts, foreign patents, etc. A search made by a foreign patent office satisfies this requirement;
>
> (D) Submits one copy each of the references deemed most closely related to the subject matter encompassed by the claims if said references are not already of record; and
>
> (E) Submits a detailed discussion of the references, which discussion points out, with the particularity required by 37 CFR 1.111 (b) and (c), how the claimed subject matter is patentable over the references.

Applicant's submission of August 01, 2005 meets all the criteria set out above. Accordingly, the petition is **GRANTED**. The application file is being forwarded to the Examiner for accelerated examination in accordance with M.P.E.P. § 708.02. If the application is subsequently allowed, it will be given priority for printing. See M.P.E.P. § 1309.

Vincent N. Trans
Special Program Examiner
Technology Center 2100
Computer Architecture, Software, and
Information Security
571-272-3613

UNITED STATES PATENT AND TRADEMARK OFFICE

Commissioner for Patents
United States Patent and Trademark Office
P.O. Box 1450
Alexandria, VA 22313-1450
www.uspto.gov

SEP 21 2004

In re Application of Toru Wada et al. Serial Number: 10/816,914 Filed: April 5, 2004 For: PHOTOSENSITIVE RESIN LAMINATE	: : : : :	PETITION UNDER MPEP 708.02 VIII

This is in response to the petition filed April 5, 2004, requesting that the above-identified application be granted Special Status under section 708.02 VIII of the MPEP and 37 CFR 1.102(d). The fee set forth in 37 CFR 1.17(h) has been paid.

The criteria set forth in section 708.02 VIII of the MPEP and 37 CRF 1.102(d) have been met.

Accordingly the petition is **GRANTED.**

Marian C Knode

Marian C. Knode, Special Programs Examiner
Technology Center 1700
Chemical and Materials Engineering

Barry E. Bretschneider
Morrison & Foerster LLP
Suite 300
1650 Tysons Boulevard
McLean VA 22102

UNITED STATES PATENT AND TRADEMARK OFFICE

Commissioner for Patents
United States Patent and Trademark Office
P.O. Box 1450
Alexandria, VA 22313-1450
www.uspto.gov

MAILED

JUL 08 2004

Director's Office
Group 3700

BOB MARSHALL
4049 Bruce Garner Road
Franklinton, NC 27525

In re application of Christopher Eaddy et al.	: : :	**DECISION ON PETITION** **TO MAKE SPECIAL** **UNDER 37 CFR. 1.102(c)**
Serial Number: 10/816924 Filed: April 5, 2004	: :	

For: **CHILD SAFE CREAM DISPENSER**

This is a decision on the petition filed on April 5, 2004, under 37 CFR. 1.102(c) to make special the above identified application because of the age/health of the applicant. Since the requirements of the M.P.E.P Section 708.02 IV have been met, the petition will be GRANTED.

The examiner is directed (1) to make an interference search for possible interfering applications, (2) to promptly examine this application out of turn, and (3) if any interfering application is discovered, to examine such application simultaneously and state in the first official letter of such application that it is being taken out of turn because of a possible interference.

Petitioner is advised that this application will continue to be special, throughout its entire prosecution and pendency, including interference or appeal, if any, only is Petitioner makes a prompt bona-fide effort, in response to each Office action, to place the application in condition for allowance, even if it is necessary to conduct an interview with the Examiner to accomplish this purpose.

Summary: Decision on Petition **GRANTED**.

Richard A. Bertsch
Director
Technology Center 3700
(703) 308-0975

rt: 7/7/04

UNITED STATES PATENT AND TRADEMARK OFFICE

Commissioner for Patents
United States Patent and Trademark Office
P.O. Box 1450
Alexandria, VA 22313-1450
www.uspto.gov

MILES & STOCKBRIDGE PC
1751 Pinnacle Drive
Suite 500
McLean, VA 22102-3833

APR 20 2006

In re Application of:
AIBARA *et al.*
Serial No.: 10/816,925
Filed: April 05, 2004
Attorney Docket No.: **XA-9625A**

DECISION ON PETITION TO WITHDRAW HOLDING OF ABANDONMENT

This is a decision on the petition filed January 04, 2006, to withdraw the holding of abandonment in the above-identified application under 37 C.F.R. § 1.181. No fee is required.

The petition is **GRANTED.**

The application was held abandoned for failure to timely pay the issue fee in response to the Notice of Allowance and Issue Fee Due (Notice of Allowance) mailed on July 01, 2005. A Notice of Abandonment was mailed on December 05, 2005.

Petitioner asserts that the Notice of Allowance mailed on July 01, 2005, was not received. To support this assertion, petitioner provided a statement attesting that a search of the file jacket and docket records showed that the Notice of Allowance was not received. Included with the statement are with copies of the docket records where the Notice of Allowance would have been entered were also included.

A review of the written record indicates no irregularity in the mailing of the Notice of Allowance, and in the absence of any irregularity there is a strong presumption that the Office action was properly mailed to practitioner at the address of record. This presumption may be overcome by a showing that the Office action was not in fact received. The showing required to establish the failure to receive an Office action must include a statement from the practitioner stating that the Office action was not received by the practitioner and attesting to the fact that a search of the file jacket and docket records indicates that the Office action was not received. A copy of the docket record where the non-received Office action would have been entered had it been received and docketed must be attached to and referenced in practitioner's statement. See "Withdrawing the Holding of Abandonment When Office Actions Are Not Received" 1156 Official Gazette 53 (November 16, 1993) and M.P.E.P. § 711.03(c).

The petition is accompanied by a showing that establishes non-receipt of the Notice of Allowance mailed July 01, 2005. As such, the petition satisfies the above-stated requirements. Accordingly, the application was not abandoned in fact.

For the above stated reason, the petition is granted. The Notice of Abandonment is hereby vacated and the holding of abandonment withdrawn. The application is restored to pending status.

The application file is being forwarded to the Technology Center 2800 support staff for re-mailing the Notice of Allowability and a Notice of Allowance and Issue Fee Due. The shortened statutory periods for response set therein will be reset to run from the date the Notices are re-mailed. Extensions of time for these periods are not available. See 37 C.F.R. § 1.136(c), effective November 07, 2000.

Inquiries regarding this decision should be directed to Clayton E. LaBalle at (571) 272-1594.

Janice A. Falcone

Janice A. Falcone, Director
Technology Center 2800
Semiconductors, Electrical and Optical
Systems and Components

UNITED STATES PATENT AND TRADEMARK OFFICE

Commissioner for Patents
United States Patent and Trademark Office
P.O. Box 1450
Alexandria, VA 22313-1450
www.uspto.gov

DAVID MASTEL
A SHARPER M-EDGE
10271 MESCALERO RD.
PHELAN, CA 92371-8492

COPY MAILED

JUL 20 2007

OFFICE OF PETITIONS

In re Application of	:	
David Mastel	:	
Application No. 60/816,928	:	DECISION DISMISSING
Filed: March 10, 2006	:	PETITION
Attorney Docket No. None	:	

This is a decision on the petition, filed March 10, 2006, requesting, in effect, that the above-identified application be accorded a filing date of October 14, 2005, rather than the presently accorded date of March 10, 2006. The petition is being treated under 37 CFR 1.10(e).

The petition is **DISMISSED**.

Petitioner requests the earlier filing date on the basis that the application was purportedly deposited in Express Mail service on October 14, 2005, pursuant to the requirements of 37 CFR 1.10. The petition is accompanied by, inter alia, certificates of Express Mailing dated October 14, 2005 (EQ090098694US) and March 10, 2006 (EQ222555682US), respectively. Petitioner alleges that the application was resubmitted since the USPS erred in the handling of the Express Mail package on October 14, 2005. Petitioner states that the Express Mail package was returned to him.

Any person who mails correspondence addressed, as set out in 37 CFR 1.1 (a), to the Office with sufficient postage utilizing the "Express Mail Post Office to Addressee" service of the USPS, but has the correspondence returned by the USPS due to an interruption or emergency in "Express Mail" service, may petition the Director to consider such correspondence as filed on a particular date in the Office under 37 CFR 1.10(g). However, this procedure does not apply where the USPS returned the "Express Mail" for a reason other than an interruption or emergency in "Express Mail" service such as the address was incomplete or the correspondence included insufficient payment for the "Express Mail" service. Since petitioner has not established that the correspondence was returned by the USPS due to an interruption or emergency in "Express Mail" service, the petition is more appropriately being treated under 37 CFR 1.10(e).

37 CFR 1.10(e) states:

> Any person mailing correspondence addressed as set out in § 1.1(a) to the Office with sufficient postage utilizing the "Express Mail Post Office to Addressee" service of the USPS but not received by the Office, may petition the Director to consider such correspondence filed in the Office on the USPS deposit date, provided that:

(1) The petition is filed promptly after the person becomes aware that the Office has no evidence of receipt of the correspondence;

(2) The number of the "Express Mail" mailing label was placed on the paper(s) or fee(s) that constitute the correspondence prior to the original mailing by "Express Mail";

(3) The petition includes a copy of the originally deposited paper(s) or fee(s) that constitute the correspondence showing the number of the "Express Mail" mailing label thereon, a copy of any returned postcard receipt, a copy of the "Express Mail" mailing label showing the "date-in," a copy of any other official notation by the USPS relied upon to show the date of deposit, and, if the requested filing date is a date other than the "date-in" on the "Express Mail" mailing label or other official notation entered by the USPS, a showing pursuant to paragraph (d)(3) of this section that the requested filing date was the date the correspondence was deposited in the "Express Mail Post Office to Addressee" service prior to the last scheduled pickup for that day; and

(4) The petition includes a statement which establishes, to the satisfaction of the Director, the original deposit of the correspondence and that the copies of the correspondence, the copy of the "Express Mail" mailing label, the copy of any returned postcard receipt, and any official notation entered by the USPS are true copies of the originally mailed correspondence, original "Express Mail" mailing label, returned postcard receipt, and official notation entered by the USPS.

The petition lacks items (1) through (4). Petitioner has not shown that the petition is filed promptly after he became aware that the Office did not receive the original filing. Petitioner states that the package was returned to him. However, petitioner does not disclose why the package was returned and how quickly the package was remailed to the USPTO after it was returned from the USPS. Petitioner does not suggest that the Express Mail number was placed on the paper(s) or fee(s) prior to the original mailing by Express Mail. In fact, a review of the application papers show that the Express Mail number was not placed on the paper(s) or fee(s) prior to the original mailing by Express Mail in compliance with 37 CFR 1.10. Further, there is no copy of the Express Mailing label showing a "date-in" or a showing that the requested filing date was the date the correspondence was deposited in the "Express Mail Post Office to Addressee" service prior to the last schedule pickup for the day. Therefore, the petition does not comply with the requirements of 37 CFR 1.10(e).

Any request for reconsideration of this decision should be filed within **TWO MONTHS** of the date of this decision in order to be considered timely (see 37 CFR 1.181(f)). No extensions of time pursuant to the provisions of 37 CFR 1.136 are permitted. If reconsideration is not requested within the time period specified above, this application will retain its presently accorded filing date of March 10, 2006.

Further correspondence with respect to this matter should be addressed as follows:

By Mail: Mail Stop PETITION
Commissioner for Patents
P. O. Box 1450
Alexandria, VA 22313-1450

By facsimile: (571) 273-8300
Attn: Office of Petitions

By hand: U. S. Patent and Trademark Office
Customer Service Window, Mail Stop Petitions
Randolph Building
401 Dulany Street
Alexandria, VA 22314

Telephone inquiries concerning this matter may be directed to the undersigned at (571) 272-3204.

Sherry D. Brinkley
Petitions Examiner
Office of Petitions

UNITED STATES PATENT AND TRADEMARK OFFICE

UNITED STATES DEPARTMENT OF COMMERCE
United States Patent and Trademark Office
Address: COMMISSIONER FOR PATENTS
P.O. Box 1450
Alexandria, Virginia 22313-1450
www.uspto.gov

HOWARD & HOWARD ATTORNEYS PLLC
450 West Fourth Street
Royal Oak, MI 48067

Mail Date: 04/21/2010

Applicant	: Kazuhiko Matsumoto	: DECISION ON REQUEST FOR
Patent Number	: 7639855	: RECALCULATION of PATENT
Issue Date	: 12/29/2009	: TERM ADJUSTMENT IN VIEW
Appliction No	: 10/816,978	: OF WYETH AND NOTICE OF INTENT TO
Filed	: 04/02/2004	: ISSUE CERTIFICATE OF CORRECTION
		:

The Request for Recalculation is **GRANTED** to the extent indicated.

The patent term adjustment has been determined to be **1224** days. The USPTO will *sua sponte* issue a certificate of correction reflecting the amount of PTA days determined by the recalculation.

Prior to the issuance of the certificate of correction, the USPTO will afford patentee an opportunity to be heard and request reconsideration. Accordingly, patentee has **one month or thirty (30) days**, whichever is longer, to file a request for reconsideration of this patent term adjustment calculation. See 35 U.S.C. 154(b)(3)(B)(ii) and 37 CFR 1.322(a)(4). No extensions of time will be granted under 37 CFR 1.136.

Patentee should use document code PET.OP if electronically filing a request for reconsideration of this patent term adjustment calculation. The patentee must also include the information required by 37 CFR 1.705(b)(2) and the fee required by 37 CFR 1.18(e). If patentee does not file a timely request for reconsideration of this patent term adjustment calculation including the information required by 37 CFR 1.705(b)(2) and the fee required by 37 CFR 1.18(e), the USPTO will issue a certificate of correction reflecting the PTA determination noted above.

Patentee should be aware that in order to preserve the right to review in the United States District Court for the District of Columbia of the USPTO patent term adjustment determination, patentee must ensure that he or she also take the steps required under 35 U.S.C. 154(b)(4)(A) in a timely manner. Nothing in the request for recalculation should be construed as providing an alternative time frame for commencing a civil action under 35 U.S.C. 154(b)(4)(A).

Any questions concerning this decision should be directed to the Office of Patent Legal Administration at 571-272-7702.

UNITED STATES PATENT AND TRADEMARK OFFICE

Commissioner for Patents
United States Patent and Trademark Office
P.O. Box 1450
Alexandria, VA 22313-1450
www.uspto.gov

COPY MAILED
OCT 1 2 2006
OFFICE OF PETITIONS

REED SMITH, LLP
TWO EMBARCADERO CENTER
SUITE 2000
SAN FRANCISCO CA 94111

In re Application of	:	
Berman	:	
Application No. 10/816,996	:	DECISION ON PETITION
Filed: April 2, 2004	:	TO WITHDRAW
Attorney Docket No. 356508.03700	:	FROM RECORD
	:	

This is a decision on the Request to Withdraw as attorney or agent of record under 37 C.F.R. § 1.36(b), filed June 15, 2006.

The request is **APPROVED**.

A grantable request to withdraw as attorney/agent of record must be signed by every attorney/agent seeking to withdraw or contain a clear indication that one attorney is signing on behalf of another/others. A request to withdraw will not be approved unless at least 30 (thirty) days would remain between the date of approval and the later of the expiration date of a time to file a response or the expiration date of the maximum time period which can be extended under 37 C.F.R. § 1.136(a).

The request was signed by Doyle B. Johnson on behalf of all attorneys of record who are associated with this application.

All attorneys/agents associated with this application have been withdrawn.

Applicant is reminded that there is no attorney of record at this time.

The request to change the correspondence of record is not acceptable as the requested correspondence address is not that of: (1) the first named signing inventor; or (2) an intervening assignee of the entire interest under 37 C.F.R 3.71. All future communications from the Office will be directed to the first named signing inventor at the first copied address below until otherwise properly notified by the applicant.

In order to request or take action in a patent matter, the assignee must establish its ownership of the patent to the satisfaction of the Director. In this regard, a Statement under 37 CFR 3.73(b) must have either: (i) documentary evidence of a chain of title from the original owner to the assignee (*e.g.*, copy of an executed assignment), and a statement affirming that the documentary evidence of the chain of title from the original owner to the assignee was or concurrently is being submitted for recordation pursuant to § 3.11; or (ii) a statement specifying where documentary evidence of a chain of title from the original owner to the assignee is recorded in the assignment records of the Office (*e.g.*, reel and frame number).

There is an outstanding Office action mailed July 26, 2006 that requires a reply from the applicant.

Telephone inquiries concerning this decision should be directed to April Wise at 571-272-1642.

April M. Wise
Petitions Examiner
Office of Petitions

cc: ARTHUR BERMAN
5635 SNOWDON PLACE
SAN JOSE, CA 95138

cc: ARTHUR BERMAN
10440 BUBB ROAD
SUITE B
CUPERTINO, CA 95014

UNITED STATES PATENT AND TRADEMARK OFFICE

Commissioner for Patents
United States Patent and Trademark Office
P.O. Box 1450
Alexandria, VA 22313-1450
www.uspto.gov

DEC 22 2004

MAILED

DEC 22 2004

OFFICE OF THE DIRECTOR
TC 3600

GORDON W. NUGENT
160 RIVERGATE DRIVE
WILTON, CT 06897-3611

In re application of Gordon Walker Nugent Application No. 10/817,010 Filed: April 03, 2004 For: SHOPPING CART AND HAND TRUCK AND GOLF BAG CART AND GARDEN CART	: : : :	**DECISION ON PETITION TO MAKE SPECIAL (APPLICANT'S AGE)**

This is a decision on the petition submitted on April 03, 2004 under 37 CFR 1.102 (c) to make the above-identified application special under the accelerated examination procedure set forth in MPEP 708.02, Section IV: Applicant's Age.

The petition is **GRANTED**.

An application may be accorded special status upon the filing of a petition providing evidence showing that the applicant is at least 65 years old. Such a showing may be provided by evidence such as a birth certificate or a statement from the applicant.

The evidence submitted with the petition is a signed declaration indicating Mr. Nugent is at least 65 years of age.

The examiner is directed (1) to make an interference search for possible interfering applications, (2) to promptly examine this application out of turn, and (3) if any interfering application is discovered, to examine such application simultaneously and state in the first official letter of such application that it is being taken out of turn because of a possible interference.

Petitioner is advised that this application will continue to be special, throughout its entire prosecution and pendency, including interference or appeal, if any, only if petitioner makes a prompt ***bona fide*** effort, in response to each Office action, to place the application in condition for allowance, even if it is necessary to conduct an interview with the examiner to accomplish this purpose.

SUMMARY: Petition to Make Special **GRANTED**.

Kenneth J. Dorner
Special Programs Examiner
Technology Center 3600
(703) 308-0866

KJD/slb: 12/01 /04

This Page Is Inserted by IFW Operations
and is not a part of the Official Record

BEST AVAILABLE IMAGES

Defective images within this document are accurate representations of the original documents submitted by the applicant.

Defects in the images may include (but are not limited to):

- BLACK BORDERS
- TEXT CUT OFF AT TOP, BOTTOM OR SIDES
- FADED TEXT
- ILLEGIBLE TEXT
- SKEWED/SLANTED IMAGES
- COLORED PHOTOS
- BLACK OR VERY BLACK AND WHITE DARK PHOTOS
- GRAY SCALE DOCUMENTS

IMAGES ARE BEST AVAILABLE COPY.

As rescanning documents *will not* correct images, please do not report the images to the Image Problem Mailbox.

Copied from 10817001 on 06/18/2004

DAC

OIPE JC34
APR 1 9 2004
PATENT & TRADEMARK OFFICE

IN THE UNITED STATES PATENT AND TRADEMARK OFFICE

In Re the Application of:

ADAM et al.

Serial No.: 10/817,001

Filed: April 1, 2004

Atty. File No.: 2563-85

For: "CASINO CARD GAMES WITH ONE OR MORE COMMUNITY CARDS"

PETITION TO CORRECT THE FILING DATE OF A CORRESPONDENCE TO THE PTO UNDER 37 CFR § 1.10(C)

CERTIFICATE OF MAILING

I HEREBY CERTIFY THAT THIS CORRESPONDENCE IS BEING DEPOSITED WITH THE UNITED STATES POSTAL SERVICE AS FIRST CLASS MAIL IN AN ENVELOPE ADDRESSED TO THE COMMISSIONER FOR PATENTS, P.O. BOX 1450, ALEXANDRIA, VA 22313-1450, ON 4/19/04.

SHERIDAN ROSS P.C.

BY: Arlene Russell

Commissioner for Patents
P.O. Box 1450
Alexandria, VA 22313

Dear Sir:

On April 1, 2004, a patent application was deposited with the United States Postal Service (USPS) for Express Mail service to the Commissioner for Patents, P.O. Box 1450, Alexandria, VA 22313-1450. Based on the confirmation card returned by the USPTO, this application (Application Serial No. 10/817,011) was incorrectly given a filing date of March 31, 2004 instead of April 1, 2004. Applicants request that the filing date be corrected to reflect the date of deposit with the USPS Express Mail pursuant to 37 CFR § 1.10(c), which states:

> Any person filing correspondence under this section that was received by the Office and delivered by the 'Express Mail Post Office to Addressee' service of the USPS, who can show that there is a discrepancy between the filing date accorded by the Office to the correspondence and the date of deposit as shown by the 'date-in' on the 'Express Mail' mailing label or other official USPS notation, may petition the Commissioner to accord the correspondence a filing date as of the 'date-in' on the Express Mail' mailing label or other official USPS notation, provided that:
>
> (1) The petition is filed promptly after the person becomes aware that the Office has accorded, or will accord, a filing date other than the USPS deposit date;

Copied from 10817001 on 06/18/2004

(2) The number of the 'Express Mail' mailing label was placed on the paper(s) or fee(s) that constitute the correspondence prior to the original mailing by 'Express Mail;' and

(3) The petition includes a true copy of the 'Express Mail' mailing label showing the 'date-in' and of any other official notation by the USPS relied upon to show the date of deposit.

Provided with this petition are true copies of the Express Mail mailing label which shows a date-in by the USPS of April 1, 2004, and the return postcard which shows the USPTO stamp of March 31, 2004. Also included with this petition is a copy of the application transmittal letter, which shows that the number of the Express Mail mailing label was placed on the application sent to the PTO. Because this petition was filed promptly after Applicants became aware of the incorrect filing date and because all other requirements of 37 CFR § 1.10(c) have been met, Applicants request that Application Serial No. 10/817,011 be accorded a filing date of April 1, 2004.

No fees are believed to be due in connection with this Petition to Correct. In the event fees are due, please debit Deposit Account No. 19-1970.

Respectfully submitted,

SHERIDAN ROSS P.C.

By: David F. Zinger

David F. Zinger
Registration No. 29,127
1560 Broadway, Suite 1200
Denver, CO 80202-5141
(303) 863-9700

Date: April 15, 2004

Copied from 10817001 on 06/18/2004

Date 4/1/04

Initial: kb

PTO Stamp indicates receipt of: [X] Patent Matter [] Trademark Matter

Application Docket No.: 2563-85

Applicant: ADAM et al.

Title or Mark: "CASINO CARD GAMES WITH ONE OR MORE COMMUNITY CARDS"

Serial/Reg. No.: Not Yet Assigned

Filed/Issued Date: April 1, 2004

[] Certificate of Mailing

[X] Express Mail No.: EV368035363

[X] Check for $466.00 + 40.00

OIPE JC34 APR 19 2004 PATENT & TRADEMARK OFFICE

20 # of Pages in Specification

5 # of Pages in Claims

1 # of Sheets in Drawings

LIST ALL DOCUMENTS BEING SENT TO PATENT OFFICE:

application; transmittal; 1 formal drawing; declaration; power of attorney; assignment; recordation of assignment; information disclosure statement; form 1449 w/refs;

Customer Copy
Label 11-F June 2002

EV 368035363 US

EXPRESS MAIL
UNITED STATES POSTAL SERVICE®

Post Office To Addressee

DELIVERY (POSTAL USE ONLY)

Delivery Attempt Mo. Day Time AM PM Employee Signature

Delivery Attempt Mo. Day Time AM PM Employee Signature

Delivery Date Mo. Day Time AM PM Employee Signature

WAIVER OF SIGNATURE (Domestic Only) Additional merchandise insurance is void if waiver of signature is requested. I wish delivery to be made without obtaining signature of addressee or addressee's agent (if delivery employee judges that article can be left in secure location) and I authorize that delivery employee's signature constitutes valid proof of delivery.

NO DELIVERY Weekend Holiday Customer Signature

ORIGIN (POSTAL USE ONLY)

PO ZIP Code 80202 | Day of Delivery Next Second | Flat Rate Envelope

Date In Mo. 4 Day 1 Year 4 | 12 Noon 3 PM | Postage $ 17.55

Time In 1937 AM PM | Military 2nd Day 3rd Day | Return Receipt Fee

Weight 1 lbs. 11 ozs. | Int'l Alpha Country Code | COD Fee | Insurance Fee

No Delivery Weekend Holiday | Acceptance Clerk Initials | Total Postage & Fees $ 17.55

CUSTOMER USE ONLY
METHOD OF PAYMENT:
Express Mail Corporate Acct. No.
Federal Agency Acct. No. or Postal Service Acct. No.

FROM: (PLEASE PRINT) PHONE ( )

SHERIDAN ROSS PC
1560 BROADWAY STE 1200
DENVER CO 80202-5145

KB 2563-85

TO: (PLEASE PRINT) PHONE ( )

COMMISSIONER FOR PATENTS
PO BOX 1450
ALEXANDRIA VA 22313-1450

MS. PATENT APPLICATION

PRESS HARD.
You are making 3 copies.

FOR PICKUP OR TRACKING CALL 1-800-222-1811 www.usps.com

EMS

You are making 3 copies. FOR PICKUP OR TRACKING CALL 1-800-222-1811 www.usps.com EMS

122/ 500 F:02 T:23

Copied from 10817001 on 06/18/2004

OIPE JC34
APR 1 9 2004
PATENT & TRADEMARK OFFICE

Initial: kb

PTO Stamp indicates receipt of: [X] Patent Matter [] Trademark Matter

Date 4/1/04

Application Docket No.: 2563-85

Applicant: ADAM et al.

Title or Mark: "CASINO CARD GAMES WITH ONE OR MORE COMMUNITY CARDS"

RECEIVED
APR 1 9 2004
SHERIDAN, ROSS

Serial/Reg. No.: Not Yet Assigned

22858 U.S. PTO
10/817011

Filed/Issued Date: April 1, 2004

[] Certificate of Mailing

[X] Express Mail No.: EV368035363US

033104

[X] Check for $466.00 + 40.00

20 # of Pages in Specification

5 # of Pages in Claims

1 # of Sheets in Drawings

LIST ALL DOCUMENTS BEING SENT TO PATENT OFFICE:

application; transmittal; 1 formal drawing; declaration; power of attorney; assignment; recordation of assignment; information disclosure statement; form 1449 w/refs;

Copied from 10817001 on 06/18/2004

UTILITY PATENT APPLICATION TRANSMITTAL

(Only for new nonprovisional applications under 37 CFR 1.53(b))

OIPE JC34
APR 19 2004
PATENT & TRADEMARK OFFICE

Attorney Docket No.: 2563-85

Inventors: Donna J. Adam of 4353 E. Phillips Place, Littleton, Colorado 80122
James M. Wisler of 4353 E. Phillips Place, Littleton, Colorado 80122

Express Mail Label No.: **EV368035363US**

Title: "CASINO CARD GAMES WITH ONE OR MORE COMMUNITY CARDS"

Box Patent Application
Commissioner for Patents
P.O. Box 1450
Alexandria, VA 22313-1450

Enclosed for filing with the above-identified utility patent application are the following:

1. Applicant claims small entity status. See 37 CFR 1.27.
2. Specification (Total Pages of Text, including Abstract and Claims: **20**)
3. Drawing(s) (35 USC 113) (Total Sheets: **1** FORMAL)
4. Oath or Declaration (Total Pages: **3** signed)
5. Assignment Papers *(cover sheet & document(s))*
6. Power of Attorney
7. Information Disclosure Statement (IDS/PTO-1449)
8. Copies of IDS Citations (Number of References: **20**)
9. Return Postcard (MPEP 503) *(should be specifically itemized)*
10. A check in the amount of $466.00 is enclosed.

FEE CALCULATION:

	(COL. 1) NO. FILED			(COL. 2*) NO. EXTRA	SMALL ENTITY RATE	SMALL ENTITY FEE		LARGE ENTITY RATE	LARGE ENTITY FEE
BASIC FEE:						$385.00	OR		$770.00
TOTAL CLAIMS:	29	-	20	9	X $9 =	$81.00	OR	X $18 =	
INDEP. CLAIMS:	2	-	3	0	X $43 =	$0.00	OR	X $86 =	
_____ MULTIPLE DEPENDENT CLAIMS					+ $145 =	$0.00	OR	+$290 =	
*IF THE DIFFERENCE IN COL. 2 IS LESS THAN ZERO, ENTER "O" IN COL. 2.					TOTAL:	$466.00			

OTHER INFORMATION:

1. The Commissioner is hereby authorized to debit any underpayments or credit any overpayment to Deposit Account No. 19-1970.
2. The Commissioner is hereby authorized to charge all required fees for extensions of time under §1.17 to Deposit Account No. 19-1970.
3. Correspondence Address:

   David F. Zinger
   SHERIDAN ROSS P.C.
   1560 Broadway, Suite 1200
   Denver, Colorado 80202-5141
   Telephone: (303) 863-9700
   Facsimile: (303) 863-0223

4. Customer No: ***22442***

Respectfully submitted,
SHERIDAN ROSS P.C.

Date: April 1, 2004

David F. Zinger
Registration No. 29,127

Copied from 10817001 on 06/18/2004

UNITED STATES PATENT AND TRADEMARK OFFICE

COMMISSIONER FOR PATENTS
UNITED STATES PATENT AND TRADEMARK OFFICE
P.O. BOX 1450
ALEXANDRIA, VA 22313-1450
www.uspto.gov

MAILED

NOV 30 2005

TECHNOLOGY CENTER 2100

TOWNSEND AND TOWNSEND AND CREW, LLP
TWO EMBARCADERO CENTER
EIGHTH FLOOR
SAN FRANCISCO CA 94111-3834

In re Application of: TANAKA
Application No. 10/817,032
Filed: April 2, 2004
For: NETWORK CONVERTER AND INFORMATION PROCESSING SYSTEM

DECISION ON PETITION TO MAKE SPECIAL (ACCELERATED EXAMINATION) UNDER M.P.E.P. §708.02 (VIII)

This is a response to the petition filed 06 October 2005, which was resubmitted 06 October 2005, under 37 C.F.R. §1.102(d) and M.P.E.P. §708.02 (VIII): Accelerated Examination, to make the above-identified application special.

The Petition is **DISMISSED**.

M.P.E.P. §708.02, Section VIII which sets out the prerequisites for a grantable petition for Accelerated Examination under 37 C.F.R. §1.102(d) states in relevant part:

A new application (one which has not received any examination by the examiner) may be granted special status provided that applicant (and this term includes applicant's attorney or agent) complies with each of the following items:

(a) Submits a petition to make special accompanied by the fee set forth in **37 CFR 1.17(h)**;

(b) Presents all claims directed to a single invention, or if the Office determines that all the claims presented are not obviously directed to a single invention, will make an election without traverse as a prerequisite to the grant of special status;

(c) Submits a statement(s) that a pre-examination search was made, listing the field of search by class and subclass, publication, Chemical Abstracts, foreign patents, etc. The pre-examination search must be directed to the invention as claimed in the application for which special status is requested. A search made by a foreign patent office satisfies this requirement;

(d) Submits one copy each of the references deemed most closely related to the subject matter encompassed by the claims if said references are not already of record; and

(e) Submits a detailed discussion of the references, which discussion points out, with the particularity required by 37 CFR 1.111 (b) and (c), how the claimed subject matter is patentable over the references.

In those instances where the request for this special status does not meet all the prerequisites set forth above, **applicant will be notified and the defects in the request will be stated**. The application will remain in the status of a new application awaiting action in its regular turn. In those instances where a request is defective in one or more respects, applicant will be given one opportunity to perfect the request in a renewed petition to make special. If perfected, the request will then be granted. If not perfected in the first renewed petition, any additional renewed petitions to make special may or may not be considered at the discretion of the Technology Center (TC) Special Program Examiner.

The petition filed 01 October 2004 fails to adequately meet requirement (e) of the criteria set forth above. The discussion of the references does not point out with the particularity required by 37 CFR 1.111(b) and (c) how the claimed subject matter is patentable over the references. The discussion of the references is not sufficiently detailed. The discussion of most of the references is only a few sentences long and gives only a cursory description. Additionally, the statement purporting to distinguish each independent claim from each reference recites so many limitations that the statement is insufficient in distinguishing how each independent claim is patentable over the references.

Petition to Make Special **DISMISSED**.

Petitioner is given one opportunity to perfect the petition. Any request for reconsideration must be filed within TWO MONTHS of the mail date of this decision.

Until the renewed petition is submitted, the application will be returned to the examiner's docket to await treatment on the merits in the normal order of examination.

Pinchus M. Laufer
Special Program Examiner
Technology Center 2100
Computer Architecture, Software and Information Security
571-272-3599

ds

UNITED STATES PATENT AND TRADEMARK OFFICE

Commissioner for Patents
United States Patent and Trademark Office
P.O. Box 1450
Alexandria, VA 22313-1450
www.uspto.gov

TOWNSEND AND TOWNSEND AND CREW, LLP
TWO EMBARCADERO CENTER
EIGHTH FLOOR
SAN FRANCISCO, CA 94111-3834

MAILED

AUG 16 2006

Technology Center 2100

In re Application of: TANAKA, ATSUSHI
Application No. 10/817,032
Filed: 02 April 2004
For: NETWORK CONVERTER AND INFORMATION PROCESSING SYSTEM

DECISION ON PETITION TO MAKE SPECIAL (ACCELERATED EXAMINATION) UNDER M.P.E.P. §708.02 (VIII)

This is a decision on the renewed petition filed 20 January 2006, under 37 C.F.R. 102(d) and M.P.E.P. § 708.02(VIII): Accelerated Examination, to make special the captioned application.

The Petition is **GRANTED**.

M.P.E.P. § 708.02, Section VIII which sets out the prerequisites for a grantable petition for Accelerated Examination under 37 C.F.R. § 102(d) states in relevant part:

A new application (one which has not received any examination by the examiner) may be granted special status provided that applicant (and this term includes applicant's attorney or agent) complies with each of the following items:

(a) Submits a petition to make special accompanied by the fee set forth in 37 CFR 1.17(h);

(b) Presents all claims directed to a single invention, or if the Office determines that all the claims presented are not obviously directed to a single invention, will make an election without traverse as a prerequisite to the grant of special status;

(c) Submits a statement(s) that a pre-examination search was made, listing the field of search by class and subclass, publication, Chemical Abstracts, foreign patents, etc. The pre-examination search must be directed to the invention as claimed in the application for which special status is requested. A search made by a foreign patent office satisfies this requirement;

(d) Submits one copy each of the references deemed most closely related to the subject matter encompassed by the claims if said references are not already of record; and

(e) Submits a detailed discussion of the references, which discussion points out, with the particularity required by 37 CFR 1.111 (b) and (c), how the claimed subject matter is patentable over the references.

Petition to Make Special **GRANTED** since all of the requirements for special status under MPEP § 708.02(VIII) have been met.

The application is being forwarded to the Examiner for accelerated examination in accordance with M.P.E.P. §708.02, Section VIII. If the application is subsequently allowed, it will be given priority for printing. See M.P.E.P. §1309.

Brian L. Johnson
Special Programs Examiner
Technology Center 2100
Computer Architecture, Software and Information Security
571-272-3595

GO

UNITED STATES PATENT AND TRADEMARK OFFICE

UNITED STATES DEPARTMENT OF COMMERCE
United States Patent and Trademark Office
Address: COMMISSIONER FOR PATENTS
P.O. Box 1450
Alexandria, Virginia 22313-1450
www.uspto.gov

Patent Group
Microsoft Corporation
One Microsoft Way
Redmond, WA 98052

Mail Date: 04/21/2010

Applicant	: Jordan L.K. Schwartz	: DECISION ON REQUEST FOR
Patent Number	: 7574674	: RECALCULATION of PATENT
Issue Date	: 08/11/2009	: TERM ADJUSTMENT IN VIEW
Appliction No	: 10/817,040	: OF WYETH AND NOTICE OF INTENT TO
Filed	: 04/02/2004	: ISSUE CERTIFICATE OF CORRECTION
		:

The Request for Recalculation is **GRANTED** to the extent indicated.

The patent term adjustment has been determined to be **997** days. The USPTO will *sua sponte* issue a certificate of correction reflecting the amount of PTA days determined by the recalculation.

Prior to the issuance of the certificate of correction, the USPTO will afford patentee an opportunity to be heard and request reconsideration. Accordingly, patentee has **one month or thirty (30) days**, whichever is longer, to file a request for reconsideration of this patent term adjustment calculation. See 35 U.S.C. 154(b)(3)(B)(ii) and 37 CFR 1.322(a)(4). No extensions of time will be granted under 37 CFR 1.136.

Patentee should use document code PET.OP if electronically filing a request for reconsideration of this patent term adjustment calculation. The patentee must also include the information required by 37 CFR 1.705(b)(2) and the fee required by 37 CFR 1.18(e). If patentee does not file a timely request for reconsideration of this patent term adjustment calculation including the information required by 37 CFR 1.705(b)(2) and the fee required by 37 CFR 1.18(e), the USPTO will issue a certificate of correction reflecting the PTA determination noted above.

Patentee should be aware that in order to preserve the right to review in the United States District Court for the District of Columbia of the USPTO patent term adjustment determination, patentee must ensure that he or she also take the steps required under 35 U.S.C. 154(b)(4)(A) in a timely manner. Nothing in the request for recalculation should be construed as providing an alternative time frame for commencing a civil action under 35 U.S.C. 154(b)(4)(A).

Any questions concerning this decision should be directed to the Office of Patent Legal Administration at 571-272-7702.

UNITED STATES PATENT AND TRADEMARK OFFICE

Commissioner for Patents
United States Patent and Trademark Office
P.O. Box 1450
Alexandria, VA 22313-1450
www.uspto.gov

APR 22 2005

John M. Macaulay
2324 Temple Drive
Davis CA 95616

In re Application of	:	
Yves R. Hoarau, Eic Hoarau	:	
Serial No.: 10/817,055	:	DECISION ON PETITION
Filed: April 2, 2004	:	
For: Intraoral Data Input Tool	:	

This is in response to applicants' petition filed April 1, 2005 to make the above-identified application special under the provisions of 37 CFR 1.102(c), based on the age of the applicant.

Applicant has satisfied the provisions set forth in M.P.E.P. 708.02, IV. Therefore the petition is **GRANTED**.

The application will be forwarded to the examiner for action on the merits commensurate with this decision.

Should there be any questions with regard to this letter please contact Richard Bertsch by letter addressed to the Director, Technology Center 3700, or by telephone at (571)272-4050 or by facsimile transmission at (703)872-9306.

Richard A. Bertsch

Richard A. Bertsch, Director,
Technology Center 3700

UNITED STATES PATENT AND TRADEMARK OFFICE

Commissioner for Patents
United States Patent and Trademark Office
P.O. Box 1450
Alexandria, VA 22313-1450
www.uspto.gov

CAHN & SAMUELS LLP
2000 P STREET NW
SUITE 200
WASHINGTON, DC 20036

COPY MAILED
OCT 1 2 2006
OFFICE OF PETITIONS

In re Application of

Earl F. Crandall

Application No. 10/817,057

Filed: April 2, 2004

Attorney Docket No. 808.0002

DECISION ON PETITION

This is a decision on the petition under 37 CFR 1.181(a) to withdraw the holding of abandonment, filed July 20, 2006.

The petition under 37 CFR 1.181(a) to withdraw the holding of abandonment is **granted**.

This application was held abandoned on February 2, 2006, after it was believed that no response was received to the non-final Office action mailed November 1, 2005. The notice allowed a period for reply of three (3) months from its mailing date. Extensions of the time set for reply were available pursuant to 37 CFR 1.136(a). A Notice of Abandonment was mailed on May 30, 2006, indicating that a reply to the non-final Office action was not received.

Petitioner states that an amendment responsive to the non-final Office action was filed on May 1, 2006, with a request for an extension of time within the third month, however; the amendment cited an incorrect application serial number. The evidence is convincing that an amendment responsive to the November 1, 2005, non-final Office action was filed on May 1, 2006, with a request for an extension of time within the third month. Petitioner has provided a copy of the amendment citing correct identifiers, except the application serial number and a copy of the Office date-stamped postcard whereby the Office acknowledged receipt of the amendment on May 1, 2006. Based on the aforementioned, it appears that the application was improperly held abandoned as a response was received prior to expiration of the period for reply. The holding of abandonment is withdrawn, accordingly.

Further inquires regarding this decision may be directed to the undersigned at (571) 272-3222.

The application file is being forwarded Technology Center 2800, GAU 2875, for further processing including entry of the amendment filed July 20, 2006.

Kenya A. McLaughlin
Petitions Attorney
Office of Petitions

UNITED STATES PATENT AND TRADEMARK OFFICE

Commissioner for Patents
United States Patent and Trademark Office
P.O. Box 1450
Alexandria, VA 22313-1450
www.uspto.gov

WHYTE HIRSCHBOECK DUDEK S C
555 EAST WELLS STREET
SUITE 1900
MILWAUKEE, WI 53202

COPY MAILED
NOV 1 3 2006
OFFICE OF PETITIONS

In re Application of :
Baker, et al. :
Application No.: 10/817,058 : ON PETITION
Filing Date: April 2, 2004 :
Attorney Docket No. BA-32448(1) :

This is a decision on the petition under 37 CFR 1.47 filed July 10, 2006, which will be treated as a petition under 37 CFR 1.183 to waive the requirements of 37 CFR 1.131.

The petition is **granted**.

The record reflects that both joint inventors named in subject application executed the declaration required by 37 CFR 1.63, and that the executed declaration was filed with the original application papers on April 2, 2004. Petitioner now files the instant petition under 37 CFR 1.47 because one of the joint inventors refuses to sign the declaration under 37 CFR 1.131. Petitioner requests that the declaration under 37 CFR 1.131 be accepted without the signature of inventor Shi because inventor Shi is refusing to sign the declaration.

It is noted that the provisions of 37 CFR 1.47 only apply to the execution of the original oath or declaration under 37 CFR 1.63. A petition under 37 CFR 1.47 is not appropriate in this case because inventor Shi executed the original declaration. Relief can be granted, pursuant to 37 CFR 1.183, by the waiver or suspension of the requirements of 37 CFR 1.131 as to inventor Shi.

Accordingly, the instant petition will be treated as petition under 37 CFR 1.183 to waive the requirement of 37 CFR 1.131 so as to accept the declaration filed July 10, 2006, without the signature of inventor Shi. The petition is granted; the requirement of 37 CFR 1.131 that all relevant inventors execute the declaration under 37 CFR 1.131 is waived as to inventor Shi.

The fee for the petition under 37 CFR 1.183 is $400.00 as per 37 CFR 1.183 and 1.17(f). Deposit account 23-2053 will be charged $400.00, accordingly.

The application file will be forwarded to Technology Center1600, GAU 31656 for further processing.

Telephone inquiries regarding this matter should be directed to the undersigned at (571) 272-3222.

Kenya A. McLaughlin
Petitions Attorney
Office of Petitions

UNITED STATES PATENT AND TRADEMARK OFFICE

Commissioner for Patents
United States Patent and Trademark Office
P.O. Box 1450
Alexandria, VA 22313-1450
www.uspto.gov

WHYTE HIRSCHBOECK DUDEK S C
555 EAST WELLS STREET
SUITE 1900
MILWAUKEE, WI 53202

COPY MAILED

JUL 20 2007

OFFICE OF PETITIONS

In re Application of :
Baker, et al. :
Application No.: 10/817,058 : ON PETITION
Filing Date: April 2, 2004 :
Attorney Docket No. BA-32448(1) :

This is regarding the petition under 37 CFR 1.47 filed March 15, 2007, which has been treated as a petition under 37 CFR 1.183 to waive the requirements of 37 CFR 1.131.

The petition filed March 15, 2007, is **dismissed as moot.**

The record reflects that a petition under 37 CFR 1.47 was first filed on July 10, 2006. The petition requested that declaration under 37 CFR 1.131 be accepted without the signature of inventor Shi because inventor Shi is refusing to sign the declaration. A decision on the petition was mailed November 13, 2006. The decision noted that the petition was being treated as petition under 37 CFR 1.183 to waive the requirements of 37 CFR 1.131. The petition was granted therefore allowing the declaration under 37 CFR 1.131 to be accepted without the signature of inventor Shi. A courtesy copy of the decision is enclosed for petitioner's convenience.

Accordingly, there is no relief that can be provided by the instant petition under 37 CFR 1.47. The petition is dismissed as moot.

The application file will be forwarded to Technology Center 1600, GAU 1656 for further processing.

Telephone inquiries regarding this matter should be directed to the undersigned at (571) 272-3222.

Kenya A. McLaughlin
Petitions Attorney
Office of Petitions

Enclosure: Decision on petition mailed November 13, 2006 (COPY)

UNITED STATES PATENT AND TRADEMARK OFFICE

Commissioner for Patents
United States Patent and Trademark Office
P.O. Box 1450
Alexandria, VA 22313-1450
www.uspto.gov

WHYTE HIRSCHBOECK DUDEK S C
555 EAST WELLS STREET
SUITE 1900
MILWAUKEE, WI 53202

COPY MAILED
NOV 1 3 2006
OFFICE OF PETITIONS

In re Application of :
Baker, et al. :
Application No.: 10/817,058 : ON PETITION
Filing Date: April 2, 2004 :
Attorney Docket No. BA-32448(1) :

This is a decision on the petition under 37 CFR 1.47 filed July 10, 2006, which will be treated as a petition under 37 CFR 1.183 to waive the requirements of 37 CFR 1.131.

The petition is **granted**.

The record reflects that both joint inventors named in subject application executed the declaration required by 37 CFR 1.63, and that the executed declaration was filed with the original application papers on April 2, 2004. Petitioner now files the instant petition under 37 CFR 1.47 because one of the joint inventors refuses to sign the declaration under 37 CFR 1.131. Petitioner requests that the declaration under 37 CFR 1.131 be accepted without the signature of inventor Shi because inventor Shi is refusing to sign the declaration.

It is noted that the provisions of 37 CFR 1.47 only apply to the execution of the original oath or declaration under 37 CFR 1.63. A petition under 37 CFR 1.47 is not appropriate in this case because inventor Shi executed the original declaration. Relief can be granted, pursuant to 37 CFR 1.183, by the waiver or suspension of the requirements of 37 CFR 1.131 as to inventor Shi.

Accordingly, the instant petition will be treated as petition under 37 CFR 1.183 to waive the requirement of 37 CFR 1.131 so as to accept the declaration filed July 10, 2006, without the signature of inventor Shi. The petition is granted; the requirement of 37 CFR 1.131 that all relevant inventors execute the declaration under 37 CFR 1.131 is waived as to inventor Shi.

The fee for the petition under 37 CFR 1.183 is $400.00 as per 37 CFR 1.183 and 1.17(f). Deposit account 23-2053 will be charged $400.00, accordingly.

The application file will be forwarded to Technology Center1600, GAU 31656 for further processing.

Telephone inquiries regarding this matter should be directed to the undersigned at (571) 272-3222.

Kenya A. McLaughlin
Petitions Attorney
Office of Petitions

UNITED STATES PATENT AND TRADEMARK OFFICE

Commissioner for Patents
United States Patent and Trademark Office
P.O. Box 1450
Alexandria, VA 22313-1450
www.uspto.gov

ALSTON & BIRD LLP
BANK OF AMERICA PLAZA
101 SOUTH TRYON STREET, SUITE 4000
CHARLOTTE, NC 28280-4000

COPY MAILED

MAR 15 2006

OFFICE OF PETITIONS

In re Application of	:	
David T. Simpson	:	
Application No. 10/817,066	:	DECISION ON PETITION
Filed: April 1, 2004	:	TO WITHDRAW
Attorney Docket No. 047968/271920	:	FROM RECORD
	:	

This is a decision on the Request to Withdraw as attorney or agent of record under 37 C.F.R. § 1.36(b), filed September 15, 2005.

The request is **NOT APPROVED** as moot.

A review of the file record indicates that the power of attorney to Paul Bell and others has been revoked by the assignee of the patent application. Accordingly, the request to withdraw under 37 C.F.R. § 1.136(b) is moot.

All future communications from the Office will continue to be directed to the below-listed address until otherwise notified by applicant.

Telephone inquires concerning this decision should be directed to Irvin Dingle at 571-272-3210.

Irvin Dingle for

Amelia Au
Petitions Examiner
Office of Petitions

cc: Withers & Keys, LLC
P.O. Box 2049
McDonough, GA 30253

UNITED STATES PATENT AND TRADEMARK OFFICE

Commissioner for Patents
United States Patent and Trademark Office
P.O. Box 1450
Alexandria, VA 22313-1450
www.uspto.gov

PAUL A. KNIGHT
2218 NORTH MOLTER ROAD
LIBERTY LAKE, WA 99019

COPY MAILED

AUG 1 5 2005

OFFICE OF PETITIONS

In re Application of	:	
Paul A. Knight, et al.	:	
Application No. 10/817,092	:	ON PETITION
Filed: March 31, 2004	:	
Attorney Docket No. ISR-197	:	

This is a decision on the petition under 37 CFR 1.137(b), filed March 25, 2005, to revive the above-identified application.

The petition is **GRANTED.**

The above-identified application became abandoned for failure to reply in a timely manner to the Notice to File Missing Parts of Nonprovisional Application mailed June 14, 2004. The Notice set a period for reply of two (2) months from the mail date of the Notice. No extensions of time under the provisions of 37 CFR 1.136(a) were obtained. Accordingly, the above-identified application became abandoned on August 16, 2004.

Telephone inquiries concerning this decision should be directed to the undersigned at (571) 272-3229.

This application matter is being forwarded to the Office of Initial Patent Examination for further processing.

Retta Williams

Retta Williams
Petitions Examiner
Office of Petitions
Office of the Deputy Commissioner
for Patent Examination Policy

UNITED STATES PATENT AND TRADEMARK OFFICE

Commissioner for Patents
United States Patent and Trademark Office
P.O. Box 1450
Alexandria, VA 22313-1450
www.uspto.gov

APPLIED MATERIALS INC
PO BOX 450A
SANTA CLARA CA 95052

COPY MAILED
JUN 29 2006
OFFICE OF PETITIONS

In re Application of	:
Nehmadi, et al.	:
Application No. 10/817,104	: DECISION GRANTING
Filed: April 1, 2004	: PETITION
Attorney Docket No. 40006317-0077-002	:

This is a decision on the petition to revive pursuant to 37 CFR 1.137(b), filed June 19, 2006.

The petition is **GRANTED**.

The application was filed on April 1, 2004. However, on June 21, 2004, the Office mailed a Notice to File Missing Parts of Nonprovisional Application, stating that the application had been accorded a filing date. However, the oath or declaration was unsigned, and lacked the identifying information for each inventor. This Notice set a shortened period for reply of two (2) months. No reply having been received, the above-identified application became abandoned on August 22, 2004. A Notice of Abandonment was mailed on March 15, 2005.

With the instant petition, petitioner paid the petition fee, submitted a declaration as required by the Notice, as well as the surcharge for its late filing, and made the proper statement of unintentional delay.

The matter is being forwarded to the Office of Initial Patent Examination for pre-examination processing.

Telephone inquiries specific to this decision may be directed to the undersigned at (571)272-3207.

Cliff Congo
Petitions Attorney
Office of Petitions

UNITED STATES PATENT AND TRADEMARK OFFICE

COMMISSIONER FOR PATENTS
UNITED STATES PATENT AND TRADEMARK OFFICE
P.O. BOX 1450
ALEXANDRIA, VA 22313-1450
WWW.USPTO.GOV

Paper No. None

Robert Thomas
430 Village Rd.
Willowbrook IL 60527

COPY MAILED

DEC 0 5 2005

OFFICE OF PETITIONS

In re Application of :
Robert Charles Thomas :
Application No. 10/817,110 : DECISION ON PETITION
Filed: April 2, 2004 : UNDER 37 C.F.R. §1.181
Title: CELL CALIPER FOR DISC BRAKES :

This is a decision on the petition filed on November 7, 2005 under 37 C.F.R. §1.181, requesting that the holding of abandonment in the above-identified application be withdrawn.

The above-identified application became abandoned for failure to reply in a timely manner to the non-final Office action, mailed March 23, 2005, which set a shortened statutory period for reply of three (3) months. No response was received, and no extensions of time under the provisions of 37 C.F.R. §1.136(a) were requested. Accordingly, the above-identified application became abandoned on June 24, 2005. A notice of abandonment was mailed November 2, 2005.

With the present petition, Petitioner contends that the notice was not received, and has indicated that he has searched his files (where the missing communication would be located had it been received), and the missing communication has not been located.

Considering the facts and circumstances of the delay at issue, as set forth on petition, it is concluded that petitioner has met his burden of establishing that the mailing was not received.

Accordingly, the petition under 37 C.F.R. §1.181(a) is **GRANTED**. The holding of abandonment is **WITHDRAWN**

Technology Center 3600 will be notified of this decision, so that the non-final Office action can be re-mailed, and the time period for response can be restarted.

Telephone inquiries regarding *this decision* should be directed to the undersigned at (571) 272-3225. All other inquiries concerning examination procedures or status of the application should be directed to the Technology Center.

Paul Shanoski

Paul Shanoski
Senior Attorney
Office of Petitions
United States Patent and Trademark Office

UNITED STATES PATENT AND TRADEMARK OFFICE

Commissioner for Patents
United States Patent and Trademark Office
P.O. Box 1450
Alexandria, VA 22313-1450
www.uspto.gov

HARVEY LUNENFELD
8 PATRICIAN DRIVE
E. NORTHPORT NY 11731

In re Application of

Jeff Poulos

Application No. 10/817,119

Filed: April 2, 2004

Attorney Docket No. OTR.A-US

COPY MAILED

OCT 1 0 2008

OFFICE OF PETITIONS

DECISION ON PETITION

This is a decision on the petition under 37 CFR 1.137(b), filed September 21, 2008, to revive the above-identified application.

The petition is **GRANTED**.

The above-cited application became abandoned for failure to reply in a timely manner to the Notice of Non-Compliant Amendment mailed November 18, 2005, which set a shortened statutory period for reply of one (1) month from its mailing date. No extension of time pursuant to 37 CFR 1.136(a) was obtained within the allowable period. Accordingly, the application became abandoned on December 19, 2005. A Notice of Abandonment was mailed on September 6, 2006.

The amendment filed September 21, 2008, is noted.

The above-identified application has been abandoned for an extended period of time. The Patent and Trademark Office is relying on petitioner's duty of candor and good faith and accepting the statement that the entire delay in filing the required reply form the due date for the reply until the filing of a grantable petition pursuant to 37 CFR 1.137(b) was unintentional. See Changes to Patent Practice and Procedure, 62 Fed. Reg. at 53160 and 53178; 1203 Off. Gaz. Pat. Office at 88 and 103 (responses to comments 64 and 109) (applicant obligated under 37 CFR 10.18 to inquire into the underlying facts and circumstances when providing the statement required by 37 CFR 1.137(b) to the Patent and Trademark Office.

The application is being forwarded to Technology Center 3700, GAU 3711 for further processing.

Telephone inquiries concerning this decision should be directed to the undersigned at (571) 272-3222.

Kenya A. McLaughlin
Petitions Attorney
Office of Petitions

UNITED STATES PATENT AND TRADEMARK OFFICE

Commissioner for Patents
United States Patent and Trademark Office
P.O. Box 1450
Alexandria, VA 22313-1450
www.uspto.gov

MINTZ, LEVIN, COHN, FERRIS
GLOVSKY AND POPEO, P.C.
ONE FINANCIAL CENTER
BOSTON, MA 02111

COPY MAILED

JUL 0 5 2006

OFFICE OF PETITIONS

In re Application of	:	
Sherman, Lawrence M.	:	
Application No. 10/817,139	:	ON PETITION
Filed: April 2, 2004	:	
Attorney Docket No. 07473-038	:	

This is a decision on the petition under 37 CFR 1.102(c)(1), filed June 1, 2006, to make the above-identified application special based on applicant's age as set forth in M.P.E.P. § 708.02, Section IV.

The petition is **GRANTED**.

A grantable petition to make an application special under 37 CFR 1.102(c)(1) and MPEP § 708.02, Section IV: Applicant's Age must be accompanied by evidence showing that at least one of the applicants is 65 years of age, or more, such as a birth certificate or a statement by applicant. No fee is required.

The instant petition includes a statement from the applicant, Lawrence M. Sherman. Accordingly, the above-identified application has been accorded "special" status.

Telephone inquiries concerning this decision should be directed to the undersigned at 571-272-3206. All other inquiries concerning either the examination or status of the application should be directed to the Technology Center.

This matter is being referred to the Technology Center Art Unit 3624 for action on the merits commensurate with this decision.

Liana Chase
Petitions Examiner
Office of Petitions

UNITED STATES PATENT AND TRADEMARK OFFICE

Commissioner for Patents
United States Patent and Trademark Office
P.O. Box 1450
Alexandria, VA 22313-1450
www.uspto.gov

MINTZ, LEVIN, COHN, FERRIS
GLOVSKY and POPEO, P.C.
One Financial Center
Boston MA 02111

MAILED

JUN 07 2010

OFFICE OF PETITIONS

In re Application of
Lawrence Sherman
Application No. 10/817,139
Filed: April 2, 2004
Attorney Docket No. 07473-038

DECISION ON PETITION

This is a decision on the petition, filed February 5, 2010, which is being treated as a petition under 37 CFR 1.181 (no fee), requesting withdrawal of the holding of abandonment in the above-identified application.

The petition is **GRANTED**.

This application was held abandoned for failure to file a reply to the restriction requirement of September 1, 2009, which set a one (1) month shortened statutory period for reply. A reply was due on or before October 1, 2009. A Notice of Abandonment was mailed January 28, 2010.

Petitioner contends that pursuant to 37 CFR 1.136, the maximum period for reply is March 1, 2010.

Petitioner's argument is persuasive. A review of the record confirms that to make the reply timely, a maximum of five months could have been obtained. Thus, the submission of the reply on February 5, 2010 with the five-month extension of time was timely. The application was prematurely held abandoned.

In view of the above, the holding of abandonment is hereby withdrawn and the application restored to pending status.

This application is being referred to Technology Center AU 3696 for appropriate action in the normal course of business on the reply received with petition.

Charlema Grant
Petitions Attorney
Office of Petitions

UNITED STATES PATENT AND TRADEMARK OFFICE

Commissioner for Patents
United States Patent and Trademark Office
P.O. Box 1450
Alexandria, VA 22313-1450
www.uspto.gov

Patent Counsel
APPLIED MATERIALS, INC.
Legal Affairs Department
P.O. Box 450A
Santa Clara CA 95052

COPY MAILED

JAN 03 2008

OFFICE OF PETITIONS

In re Application of
Baik et al
Application No. 10/817,140
Filed: April 2, 2004
Attorney Docket No. AM-8893

Title of Invention: Method of Improving the Uniformity of a Patterned Resist on Photomask

DECISION DISMISSING PETITION

This is a decision on the paper titled "Petition In Support of Declaration of Prior Invention Under 37 CFR §1.131" filed October 25, 2007. This petition is properly treated under 37 CFR § 1.183 waiver of § 1.131's requirement that all of the inventors sign the declaration of prior inventorship.

The petition under 37 CFR 1.183 is **Dismissed**.

Any request for reconsideration should be filed within **TWO MONTHS** of the mailing date of this decision in order to be considered timely. 37 CFR 1.181(f). This time period may not be extended pursuant to 37 CFR 1.136.

The above-identified application was filed on April 2, 2004. Applicants submitted 37 CFR 1.63 declaration on April 2, 2004. A final Office action was mailed on July 25, 2007. This office action set a shortened statutory period for reply of three months, with extensions of time obtainable under 37 CFR 1.136(a).

In response, on October 9, 2007 and October 25, 2007, applicants submitted a response, including a declaration under 37 CFR 1.131. Petitioner maintains that the 1.131 declaration is supported by a copy of the "Invention Alert". Petitioner insists that the ETEC Division of Applied Materials, inc which had employed the inventors had been disbanded and that none the inventors were currently employed by Applied Materials, inc. Petitioner states that past known addresses for the inventors were provided but only three were located.

Petitioner's arguments have been considered, but determined to be unpersuasive. Pursuant to MPEP 715.04, affidavits or declarations to overcome a rejection of a claim or claims must be made by the inventor or inventors of the subject matter of the rejected claim(s), a party qualified under 37 CFR 1.42, 1.43, or 1.47, or the assignee or other party in interest when it is not possible to produce the affidavit or declaration of the inventor(s). Thus, where all of the named inventors of a pending application are not inventors of every claim of the application, any affidavit under 37 CFR 1.131 could be signed by only the inventor(s) of the subject matter of the rejected claims. Where one or more of the named inventors of the subject matter of the rejected claim(s) (who had originally signed the oath or declaration for patent application under 37 CFR 1.63) is now unavailable to sign an affidavit or declaration under 37 CFR 1.131, the affidavit or declaration under 37 CFR 1.131 may be signed by the remaining joint inventors provided a petition under 37 CFR 1.183 requesting waiver of the signature of the unavailable inventor be submitted with the affidavit or declaration under 37 CFR 1.131. Proof that the non-signing inventor is unavailable or cannot be found similar to the proof required for a petition under 37 CFR 1.47 must be submitted with the petition under 37 CFR 1.183 (see MPEP § 409.03(d)).

Petitioner has failed to show or provide adequate proof that a diligent effort was made to reach or locate inventors Osborne and Lem. Where inability to find or locate non-signing inventor (s) is alleged, a statement of facts should be submitted that fully describes the exact facts which are relied on to establish that a *diligent effort* was made to locate the inventors. The statement(s) of facts must be signed, where at all possible, by a person having *firsthand knowledge* of the facts recited therein. Statements based on hearsay, will not normally be accepted. Copies of the results of the search must be referred to in any renewed petition. See MPEP 409.03(d). If the inventors are located, then a copy of the 37 CFR 1.131 affidavit or declaration, as well as a copy of the proof of service on that person will be required. It is important that the forthcoming communication contain, with accompanying documentation, statements of fact as opposed to conclusions. If there is an express oral refusal, a statement from the person to whom that refusal was made should be made of record.

The address provided on the petition differs from the correspondence address of record.

The address on the petition differs from the correspondence address of record. If appropriate, a change of address should be filed in accordance with MPEP 601.03. A courtesy copy of this decision is being mailed to the address given on the petition. However, the Office will mail all future correspondence solely to the address of record

Further correspondence with respect to this matter should be addressed as follows:

By Mail: Mail Stop PETITION
Commissioner for Patents
P. O. Box 1450
Alexandria, VA 22313-1450

By hand: U. S. Patent and Trademark Office
Customer Service Window, Mail Stop Petitions
Randolph Building
401 Dulany Street
Alexandria, VA 22314

By facsimile: **(571) 273-8300**
Attn: Office of Petitions

Telephone inquiries concerning this decision should be directed to the undersigned at (571) 272-3215.

Charlema R. Grant

Charlema R. Grant
Petitions Attorney
Office of Petitions

cc: Shirley Church, Esq.
P.O. Box 81146
San Diego, California 92138

UNITED STATES PATENT AND TRADEMARK OFFICE

Commissioner for Patents
United States Patent and Trademark Office
P.O. Box 1450
Alexandria, VA 22313-1450
www.uspto.gov

SHIRLEY L. CHURCH, ESQ.
P.O. BOX 81146
SAN DIEGO CA 92138

COPY MAILED

MAR 20 2008

In re Application of	:	
Baik et al.	:	
Application No. 10/817,140	:	ON PETITION
Filed: April 2, 2004	:	
Attorney Docket No. AM-8893 Y1	:	

This is a decision on the renewed petition, filed February 25, 2008, under 37 CFR 1.183 to waive 37 CFR 1.131 to the extent that it requires that all of the named inventors execute the declaration filed thereunder.

The petition is granted to the extent *infra*.

Petitioners assert that, while all of the named inventors contributed to the conception of the claimed invention which is under rejection, only inventors Baik, Mueller, Dean and Lem have agreed to execute the attached declaration under 37 CFR 1.131 in support of establishing conception of the claimed invention prior to January 6, 2004.

As noted in MPEP 715.04, an adequate showing may lead to acceptance of a declaration under 37 CFR 1.131 executed by less than all the named inventors of the claimed subject matter in question.[1] Under the facts presented, it is agreed that justice requires waiver of the rules to the extent that they require Stephen Osborne to declare. However, the favorable decision herein does not relieve applicants from their burden to establish that the invention was completed before the date of the reference and that the claimed invention was the product of the joint inventors. See In re Carlson, 79 F.2d. 900, 27 USPQ 400 (CCPA 1935).

This application is being referred to Technology Center AU 1795 for further examination on the merits.

Inquiries regarding this communication may be directed to the undersigned at (571) 272-3215. Inquiries concerning the examination or status of the application should be directed to the Technology Center.

Charlema Grant
Charlema Grant
Petitions Attorney
Office of Petitions

[1] If a petition under 37 CFR 1.47 was granted or the application was accepted under 37 CFR 1.42 or 1.43, the affidavit or declaration may be signed by the 37 CFR 1.47 applicant or the legal representative, where appropriate. *See* MPEP 715.04(C).

UNITED STATES PATENT AND TRADEMARK OFFICE

UNITED STATES DEPARTMENT OF COMMERCE
United States Patent and Trademark Office
Address: COMMISSIONER FOR PATENTS
P.O. Box 1450
Alexandria, Virginia 22313-1450
www.uspto.gov

ALLEN, DYER, DOPPELT, MILBRATH & GILCHRIST P.A.
1401 CITRUS CENTER 255 SOUTH ORANGE AVENUE
P.O. BOX 3791
ORLANDO, FL 32802-3791

Mail Date: 05/24/2010

Applicant	: Andrew Dellow	: DECISION ON REQUEST FOR
Patent Number	: 7624442	: RECALCULATION of PATENT
Issue Date	: 11/24/2009	: TERM ADJUSTMENT IN VIEW
Application No	: 10/817,148	: OF WYETH AND NOTICE OF INTENT TO
Filed	: 04/02/2004	: ISSUE CERTIFICATE OF CORRECTION
		:

The Request for Recalculation is **GRANTED** to the extent indicated.

The patent term adjustment has been determined to be **1278** days. The USPTO will *sua sponte* issue a certificate of correction reflecting the amount of PTA days determined by the recalculation.

Prior to the issuance of the certificate of correction, the USPTO will afford patentee an opportunity to be heard and request reconsideration. Accordingly, patentee has **one month or thirty (30) days**, whichever is longer, to file a request for reconsideration of this patent term adjustment calculation. See 35 U.S.C. 154(b)(3)(B)(ii) and 37 CFR 1.322(a)(4). No extensions of time will be granted under 37 CFR 1.136.

Patentee should use document code PET.OP if electronically filing a request for reconsideration of this patent term adjustment calculation. The patentee must also include the information required by 37 CFR 1.705(b)(2) and the fee required by 37 CFR 1.18(e). If patentee does not file a timely request for reconsideration of this patent term adjustment calculation including the information required by 37 CFR 1.705(b)(2) and the fee required by 37 CFR 1.18(e), the USPTO will issue a certificate of correction reflecting the PTA determination noted above.

Patentee should be aware that in order to preserve the right to review in the United States District Court for the District of Columbia of the USPTO patent term adjustment determination, patentee must ensure that he or she also take the steps required under 35 U.S.C. 154(b)(4)(A) in a timely manner. Nothing in the request for recalculation should be construed as providing an alternative time frame for commencing a civil action under 35 U.S.C. 154(b)(4)(A).

Any questions concerning this decision should be directed to the Office of Patent Legal Administration at 571-272-7702.

UNITED STATES PATENT AND TRADEMARK OFFICE

UNITED STATES DEPARTMENT OF COMMERCE
United States Patent and Trademark Office
Address: COMMISSIONER FOR PATENTS
P.O. Box 1450
Alexandria, Virginia 22313-1450
www.uspto.gov

APPLICATION NO.	FILING DATE	FIRST NAMED INVENTOR	ATTORNEY DOCKET NO.	CONFIRMATION NO.
10/817,154	04/01/2004	John Hal Howard	14917.0465US01	1172

27488 7590 01/27/2008
MERCHANT & GOULD (MICROSOFT)
P.O. BOX 2903
MINNEAPOLIS, MN 55402-0903

EXAMINER
TRAN, TONGOC

ART UNIT	PAPER NUMBER
2134	

MAIL DATE	DELIVERY MODE
01/27/2008	PAPER

Please find below and/or attached an Office communication concerning this application or proceeding.

The time period for reply, if any, is set in the attached communication.

UNITED STATES PATENT AND TRADEMARK OFFICE

COMMISSIONER FOR PATENTS
UNITED STATES PATENT AND TRADEMARK OFFICE
P.O. BOX 1450
ALEXANDRIA, VA 22313-1450
www.uspto.gov

MAILED

JAN 28 2008

TECHNOLOGY CENTER 2100

Gregory D. Leibold
Merchant & Gould (Microsoft)
P.O. Box 2903
Minneapolis, MN 55402-0903

In re Application of:
John HOWARD et al.
Appl. No.: 10/817,154
Filed: April 1, 2004
For: AUTHENTICATION BROKER SERVICE

DECISION ON PETITION
UNDER 37 CFR § 1.59

This is a decision on the petition under 37 CFR § 1.59(b), filed on 15 January 2008, to expunge information submitted pursuant to MPEP § 724.05.

The petition is **DISMISSED**.

Petitioner requests that the information submitted on 15 January 2008 be expunged from the record if found not to be important to a reasonable examiner in deciding whether to allow the application to issue as a patent. The petition fee set forth in 37 CFR § 1.17(g) has been paid.

The petition is premature because the application has not been allowed or abandoned. Accordingly, it is not appropriate to make a final determination of whether or not the material requested to be expunged is "material," with "materiality" being defined as any information which the examiner considers as being important to a determination of patentability of the claims. Thus, the petition to expunge must be dismissed at this time.

During prosecution on the merits, the examiner will determine whether or not the information submitted on 15 January 2008 is considered to be "material." Once prosecution on the merits is closed, applicant may re-submit a petition to expunge the information. No further fee is required for such a second submission of a petition under 37 CFR § 1.59 to expunge information. If the information is not considered by the examiner to be material, the information will be expunged from the application and may be returned to applicant.

Any inquiry concerning this decision should be directed to the undersigned whose telephone number is (571) 272-3613.

Vincent N. Trans, SPRE/QAS
Technology Center 2100
Computer Architecture, Software, and
Information Security

UNITED STATES PATENT AND TRADEMARK OFFICE

UNITED STATES DEPARTMENT OF COMMERCE
United States Patent and Trademark Office
Address: COMMISSIONER FOR PATENTS
P.O. Box 1450
Alexandria, Virginia 22313-1450
www.uspto.gov

APPLICATION NO.	FILING DATE	FIRST NAMED INVENTOR	ATTORNEY DOCKET NO.	CONFIRMATION NO.
10/817,154	04/01/2004	John Hal Howard	14917.0465US01	1172

27488 7590 04/15/2009
MERCHANT & GOULD (MICROSOFT)
P.O. BOX 2903
MINNEAPOLIS, MN 55402-0903

EXAMINER
TRAN, TONGOC

ART UNIT	PAPER NUMBER
2134	

MAIL DATE	DELIVERY MODE
04/15/2009	PAPER

Please find below and/or attached an Office communication concerning this application or proceeding.

The time period for reply, if any, is set in the attached communication.

UNITED STATES PATENT AND TRADEMARK OFFICE

Commissioner for Patents
United States Patent and Trademark Office
P.O. Box 1450
Alexandria, VA 22313-1450
www.uspto.gov

Rene A. Pereyra
Merchant & Gould P.C.
P.O. Box 2903
Minneapolis, MN 55402-0903

MAILED

APR 14 2009

TECHNOLOGY CENTER 2100

In re Application of:
John Howard et al.
Appl. No.: 10/817,154
Filed: April 1, 2004
For: **Authentication Broker Service**

DECISION ON PETITION
UNDER 37 CFR § 1.59

This is a decision on the petition under 37 CFR § 1.59(b), filed on 23 December 2008, to expunge information submitted pursuant to MPEP § 724.05.

The petition is GRANTED.

Petitioner requests that the information submitted on 15 January 2008 be expunged from the record if found not to be important to a reasonable examiner in deciding whether to allow the application to issue as a patent and no further fee is required based on previous decision on petition dated January 27, 2008.

The test for expunging material is whether or not the information is material to the patentability of the claims. A review of the material has found that the material is not material to the patentability of the claims. Therefore, the petition is granted.
Applicant is required to retain the expunged material(s) for the life of any patent which issues on the above-identified application.

The expunge material has been destroyed, the artifact folder closed and therefore the material will not be returned.

Any inquiry concerning this decision should be directed to the undersigned whose telephone number is (571) 272-3612.

/Tod Swann/
WQAS, Technology Center 2400
Network, Multiplex, Cable and Security

UNITED STATES PATENT AND TRADEMARK OFFICE

Commissioner for Patents
United States Patent and Trademark Office
P.O. Box 1450
Alexandria, VA 22313-1450
www.uspto.gov

BEYER WEAVER LLP
P.O. BOX 70250
OAKLAND, CA 94612-0250

COPY MAILED

MAY 16 2008

OFFICE OF PETITIONS

In re Application of :
Vincent Carmelo Bruzzese et al :
Application No. 10/817,156 : DECISION ON PETITION
Filed: April 2, 2004 :
Attorney Docket No. IGT1P145/P-267 DIV CIP :

This is a decision on the petition, filed February 19, 2008, which is being treated as a petition under 37 CFR 1.8(b), requesting withdrawal of the holding of abandonment in the above-identified application.

The petition is **GRANTED**.

This application was held abandoned for failure to timely respond to the Office action of June 12, 2007, which set a three (3) month shortened statutory period for reply. Accordingly, a reply was due on or before September 12, 2007.

Petitioner states that a timely reply was electronically filed on September 12, 2007, which included the following papers: Request for Continued Examination, Amendment, and Information Disclosure Statement. The image file wrapper shows the response as being filed on September 12, 2007.

The petition satisfies the above requirements of 37 CFR 1.8(b). Accordingly, the holding of abandonment for failure to timely file a reply to the Office action of June 12, 2007 is hereby withdrawn and the application restored to pending status.

Telephone inquiries concerning this decision should be directed to Irvin Dingle at (571) 272-3210.

This application is being referred to Technology Center AU 3714 for appropriate action in the normal course of business on the reply September 12, 2007.

Irvin Dingle
Petition Examiner
Office of Petitions

UNITED STATES PATENT AND TRADEMARK OFFICE

Commissioner for Patents
United States Patent and Trademark Office
P.O. Box 1450
Alexandria, VA 22313-1450
www.uspto.gov

SEYFARTH SHAW LLP
131 S. DEARBORN ST., SUITE 2400
CHICAGO IL 60603-5803

COPY MAILED

SEP 2 9 2008

OFFICE OF PETITIONS

In re Application of	:	
Marcelo Daniel Baru FASSIO, et al	:	
Application No. 10/817,158	:	DECISION ON PETITION
Filed: April 2, 2004	:	
Docket No. 39438-401600	:	

This is a decision on the petition under the unintentional provisions of 37 CFR 1.137(b), filed August 27, 2008, to revive the above-identified application.

The petition is **GRANTED**.

The application became abandoned for failure to reply in a timely manner to the non-final Office action mailed, February 12, 2008, which set a shortened statutory period for reply of three (3) months. No extensions of time under the provisions of 37 CFR 1.136(a) were obtained. Accordingly, the application became abandoned on May 13, 2008.

The petition satisfies the requirements of 37 CFR 1.137(b) in that petitioner has supplied (1) the reply in the form of an amendment, (2) the petition fee of $770; and (3) the required statement of unintentional delay.

An extension of time under 37 CFR 1.136 must be filed prior to the expiration of the maximum extendable period for reply. *See* In re Application of S., 8 USPQ2d 1630, 1631 (Comm'r Pats. 1988). Since the $ 525 extension of time fee submitted with the petition on August 27, 2008 was subsequent to the maximum extendable period for reply, this fee is unnecessary and will be credited to petitioner's Deposit Account 50-1662.

There is no indication that the person signing the petition was ever given a power of attorney to prosecute the application. If the person signing the petition desires to receive future correspondence regarding this application, the appropriate power of attorney document must be

submitted. While a courtesy copy of this decision is being mailed to the person signing the petition, all future correspondence will be directed to the address currently of record until appropriate instructions are received.

Telephone inquiries concerning this decision should be directed to Diane Goodwyn at (571) 272-6735.

This application is being referred to Technology Center AU 3762 for appropriate action by the Examiner in the normal course of business on the reply received August 27, 2008.

Thurman Page
Petitions Examiner
Office of Petitions

Cc: TIMOTHY J. KEEFER
180 N. STETSON AVENUE, SUITE 4525
CHICAGO, IL 60601

RECEIVED
CENTRAL FAX CENTER

AUG 2 7 2008

PTO/SB/22 (01-08)
Approved for use through 01/31/2008. OMB 0651-0031
U.S. Patent and Trademark Office; U.S. DEPARMENT OF COMMERCE
Under the paperwork Reduction Act of 1995, no persons are required to respond to a collection of information unless it displays a valid OMB control number.

PETITION FOR EXTENSION OF TIME UNDER 37 CFR 1.136(a) FY 2008 *(Fees pursuant to the Consolidated Appropriations Act, 2008 (H.R. 4818).)*	Docket Number (Optional) 055722-127612 (37407-401600)
Application Number 10/817,158 - Conf.# 1165	Filed April 2, 2004
For Fully Implantable Nerve Signal Sensing and Stimulation Device and Method....	
Art Unit 3762	Examiner George C. Manuel

This is a request under the provisions of 37 CFR 1.136(a) to extend the period for filing a reply in the above identified application.

The requested extension and fee are as follows (check time period desired and enter the appropriate fee below):

		Fee	Small Entity Fee	
☐	One month (37 CFR 1.17(a)(1))	$120	$60	$
☐	Two months (37 CFR 1.17(a)(2))	$460	$230	$
☑	Three months (37 CFR 1.17(a)(3))	$1050	$525	$ 525.00
☐	Four months (37 CFR 1.17(a)(4))	$1640	$820	$
☐	Five months (37 CFR 1.17(a)(5))	$2230	$1115	$

☑ Applicant claims small entity status. See 37 CFR 1.27.

☐ A check in the amount of the fee is enclosed. 08/28/2008 VBUI11 00000012 501662 10817158

☐ Payment by credit card. Form PTO-2038 is attached. 01 FC:2253 525.00 DA

☐ The Director has already been authorized to charge fees in this application to a Deposit Account.

☑ The Director is hereby authorized to charge any fees which may be required, or credit any overpayment, to Deposit Account Number 50-1662. I have enclosed a duplicate copy of this sheet.

WARNING: Information on this form may become public. Credit card information should not be included on this form. Provide credit card information and authorization on PTO-2038.

I am the
- ☐ applicant/inventor.
- ☐ assignee of record of the entire interest. See 37 CFR 3.71. Statement under 37 CFR 3.73(b) is enclosed (Form PTO/SB/96).
- ☑ attorney or agent of record. Registration Number 35,567
- ☐ attorney or agent under 37 CFR 1.34. Registration number if acting under 37 CFR 1.34 _____

Signature	August 27, 2008 Date
Timothy J. Keefer Typed or printed name	312-819-1900 Telephone Number

NOTE: Signatures of all the inventors or assignees of record of the entire interest or their representative(s) are required. Submit multiple forms if more than one signature is required, see below.

☐ Total of _____ forms are submitted.

This collection of information is required by 37 CFR 1.136(a). The information is required to obtain or retain a benefit by the public which is to file (and by the USPTO to process) an application. Confidentiality is governed by 35 U.S.C. 122 and 37 CFR 1.11 and 1.14. This collection is estimated to take 6 minutes to complete, including gathering, preparing, and submitting the completed application form to the USPTO. Time will vary depending upon the individual case. Any comments on the amount of time you require to complete this form and/or suggestions for reducing this burden, should be sent to the Chief Information Officer, U.S. Patent and Trademark Office, U.S. Department of Commerce, P.O. Box 1450, Alexandria, VA 22313-1450. DO NOT SEND FEES OR COMPLETED FORMS TO THIS ADDRESS. SEND TO: **Commissioner for Patents, P.O. Box 1450, Alexandria, VA 22313-1450.**

If you need assistance in completing the form, call 1-800-PTO-9199 and select option 2.

RECEIVED
CENTRAL FAX CENTER
AUG 2 7 2008

IN THE UNITED STATES PATENT AND TRADEMARK OFFICE

Applicant:	Marcelo Daniel Baru Fassio	Attorney Docket No. 127612 (37407-401600)
Application No.:	10/817,158	Group Art Unit: 3762
Filed:	April 2, 2004	Examiner: George C Manuel
Title:	FULLY IMPLANTABLE NERVE SIGNAL SENSING AND STIMULATION DEVICE AND METHOD FOR TREATING FOOT DROP AND OTHER NEUROLOGICAL DISORDERS	

STATEMENT OF UNINTENTIONAL DELAY FOR FILING RESPONSE

Mail Stop Petition
Commissioner for Patents
P.O. Box 1450
Alexandria VA 22313-1450

Dear Sir:

The above-identified patent application unintentionally abandoned for failure to file a reply to the Office Action mailed February 12, 2008 by the U.S. Patent and Trademark Office. Upon receipt of the Notice of Abandonment we prepared and forwarded the Petition to Revive the application.

The delay in filing the response to the Office Action was unintentional.

Respectfully Submitted,

POLSINELLI SHALTON FLANIGAN
SUELTHAUS PC

Date: August 27, 2008

By: _____

Timothy J. Keefer, Reg. No. 35,567
180 North Stetson Avenue, Suite 4525
Chicago, IL 60601
Tel: (312) 819-1900
Fax: (312) 819-1910
Attorney for Applicant

PAGE 9/27 * RCVD AT 8/27/2008 5:44:33 PM [Eastern Daylight Time] * SVR:USPTO-EFXRF-6/25 * DNIS:2738300 * CSID:3128191910 * DURATION (mm-ss):05-28

RECEIVED
CENTRAL FAX CENTER
AUG 2 7 2008

PTO/SB/22 (01-08)
Approved for use through 01/31/2008. OMB 0651-0031
U.S. Patent and Trademark Office; U.S. DEPARMENT OF COMMERCE
Under the paperwork Reduction Act of 1995, no persons are required to respond to a collection of information unless it displays a valid OMB control number.

PETITION FOR EXTENSION OF TIME UNDER 37 CFR 1.136(a) FY 2008 (Fees pursuant to the Consolidated Appropriations Act, 2008 (H.R. 4818).)	Docket Number (Optional) 055722-127612 (37407-401600)
Application Number 10/817,158 - Conf.# 1165	Filed April 2, 2004
For Fully Implantable Nerve Signal Sensing and Stimulation Device and Method....	
Art Unit 3762	Examiner George C. Manuel

This is a request under the provisions of 37 CFR 1.136(a) to extend the period for filing a reply in the above identified application.

The requested extension and fee are as follows (check time period desired and enter the appropriate fee below):

		Fee	Small Entity Fee	
☐	One month (37 CFR 1.17(a)(1))	$120	$60	$
☐	Two months (37 CFR 1.17(a)(2))	$460	$230	$
☑	Three months (37 CFR 1.17(a)(3))	$1050	$525	$ 525.00
☐	Four months (37 CFR 1.17(a)(4))	$1640	$820	$
☐	Five months (37 CFR 1.17(a)(5))	$2230	$1115	$

☑ Applicant claims small entity status. See 37 CFR 1.27.

☐ A check in the amount of the fee is enclosed. 08/26/2008 VBUI11 00000012 501662 10817158

☐ Payment by credit card. Form PTO-2038 is attached. 01 FC:2253 525.00 DA

☐ The Director has already been authorized to charge fees in this application to a Deposit Account.

☑ The Director is hereby authorized to charge any fees which may be required, or credit any overpayment, to Deposit Account Number 50-1662. I have enclosed a duplicate copy of this sheet.

WARNING: Information on this form may become public. Credit card information should not be included on this form. Provide credit card information and authorization on PTO-2038.

I am the
☐ applicant/inventor.
☐ assignee of record of the entire interest. See 37 CFR 3.71. Statement under 37 CFR 3.73(b) is enclosed (Form PTO/SB/96).
☑ attorney or agent of record. Registration Number 35,567
☐ attorney or agent under 37 CFR 1.34. Registration number if acting under 37 CFR 1.34 _____

Signature	August 27, 2008 Date
Timothy J. Keefer Typed or printed name	312-819-1900 Telephone Number

NOTE: Signatures of all the inventors or assignees of record of the entire interest or their representative(s) are required. Submit multiple forms if more than one signature is required, see below.

☐ Total of _____ forms are submitted.

This collection of information is required by 37 CFR 1.136(a). The information is required to obtain or retain a benefit by the public which is to file (and by the USPTO to process) an application. Confidentiality is governed by 35 U.S.C. 122 and 37 CFR 1.11 and 1.14. This collection is estimated to take 6 minutes to complete, including gathering, preparing, and submitting the completed application form to the USPTO. Time will vary depending upon the individual case. Any comments on the amount of time you require to complete this form and/or suggestions for reducing this burden, should be sent to the Chief Information Officer, U.S. Patent and Trademark Office, U.S. Department of Commerce, P.O. Box 1450, Alexandria, VA 22313-1450. DO NOT SEND FEES OR COMPLETED FORMS TO THIS ADDRESS. SEND TO: **Commissioner for Patents, P.O. Box 1450, Alexandria, VA 22313-1450.**

If you need assistance in completing the form, call 1-800-PTO-9199 and select option 2.

UNITED STATES PATENT & TRADEMARK OFFICE
Washington, D.C. 20231

REQUEST FOR PATENT FEE REFUND

1 Date of Request: 09/19/08

2 Serial/Patent # 10/817,158

	3 Please refund the following fee(s):	4 PAPER NUMBER	5 DATE FILED	6 AMOUNT
	Filing			$
	Amendment			$
X	Extension of Time	PET.OP	08/08/08	$ 525.00
	Notice of Appeal/Appeal			$
	Petition			$
	Issue			$
	Cert of Correction/Terminal Disc.			$
	Maintenance			$
	Assignment			$
	Other			$

7 TOTAL AMOUNT OF REFUND $ 525.00

8 TO BE REFUNDED BY:

	Treasury Check
X	Credit Deposit A/C #:

9 5 0 -- 1 6 6 2

10 REASON:

	Overpayment
	Duplicate Payment
X	No Fee Due (Explanation):

No extension of time needed, no fee due

11 REFUND REQUESTED BY:

TYPED/PRINTED NAME: Diane Goodwyn TITLE: Paralegal

SIGNATURE: /dgoodwyn/ PHONE: 571-272-6735

OFFICE: Petitions

****

THIS SPACE RESERVED FOR FINANCE USE ONLY:

APPROVED: CKlich DATE: 9/29/08

Instructions for completion of this form appear on the back. After completion, attach white and yellow copies to the official file and mail or hand-carry to:

Office of Finance
Refund Branch
Crystal Park One, Room 802B

FORM PTO 1577
(01/90)

UNITED STATES PATENT AND TRADEMARK OFFICE

Commissioner for Patents
United States Patent and Trademark Office
P.O. Box 1450
Alexandria, VA 22313-1450
www.uspto.gov

DEC 21 2004

TRASK BRITT
P.O. BOX 2550
SALT LAKE CITY UT 84110

In re Application of	:	
Rooji et al.	:	
Serial No.: 10/817,164	:	PETITION TO MAKE SPECIAL
Filed: April 1, 2004	:	
Attorney Docket No.: 2183-6412US	:	

This is in response to applicants' petition filed December 9, 2004, to make the above-identified application special under the provisions of 37 CFR 1.102(d), based on inventions relating to HIV/AIDS. The $130.00 petition fee as required by 37 CFR 1.17(h) was received.

Applicants have satisfied the provisions set forth in M.P.E.P. 708.02, X. Therefore, the petition is **GRANTED**.

The application will be forwarded the examiner for action on the merits commensurate with this decision.

Should there be any questions with regard to this letter please contact Marianne C. Seidel by letter addressed to the Director, Technology Center 1600, P.O. Box 1450, Alexandria, VA 22313-1450, or by telephone at 571-272-0584 or by facsimile transmission at the general Office facsimile number, (703) 872-9306.

Marianne C. Seidel
Special Program Examiner
Technology Center 1600

UNITED STATES PATENT AND TRADEMARK OFFICE

UNITED STATES DEPARTMENT OF COMMERCE
United States Patent and Trademark Office
Address: COMMISSIONER FOR PATENTS
P.O. Box 1450
Alexandria, Virginia 22313-1450
www.uspto.gov

TRASKBRITT, P.C.
P.O. BOX 2550
SALT LAKE CITY, UT 84110

Mail Date: 04/20/2010

Applicant	: Esther Regina de Rooij	: DECISION ON REQUEST FOR
Patent Number	: 7585625	: RECALCULATION of PATENT
Issue Date	: 09/08/2009	: TERM ADJUSTMENT IN VIEW
Appliction No	: 10/817,164	: OF WYETH AND NOTICE OF INTENT TO
Filed	: 04/01/2004	: ISSUE CERTIFICATE OF CORRECTION
		:

The Request for Recalculation is **GRANTED** to the extent indicated.

The patent term adjustment has been determined to be **0** days. The USPTO will *sua sponte* issue a certificate of correction reflecting the amount of PTA days determined by the recalculation.

Prior to the issuance of the certificate of correction, the USPTO will afford patentee an opportunity to be heard and request reconsideration. Accordingly, patentee has **one month or thirty (30) days**, whichever is longer, to file a request for reconsideration of this patent term adjustment calculation. See 35 U.S.C. 154(b)(3)(B)(ii) and 37 CFR 1.322(a)(4). No extensions of time will be granted under 37 CFR 1.136.

Patentee should use document code PET.OP if electronically filing a request for reconsideration of this patent term adjustment calculation. The patentee must also include the information required by 37 CFR 1.705(b)(2) and the fee required by 37 CFR 1.18(e). If patentee does not file a timely request for reconsideration of this patent term adjustment calculation including the information required by 37 CFR 1.705(b)(2) and the fee required by 37 CFR 1.18(e), the USPTO will issue a certificate of correction reflecting the PTA determination noted above.

Patentee should be aware that in order to preserve the right to review in the United States District Court for the District of Columbia of the USPTO patent term adjustment determination, patentee must ensure that he or she also take the steps required under 35 U.S.C. 154(b)(4)(A) in a timely manner. Nothing in the request for recalculation should be construed as providing an alternative time frame for commencing a civil action under 35 U.S.C. 154(b)(4)(A).

Any questions concerning this decision should be directed to the Office of Patent Legal Administration at 571-272-7702.

SPE RESPONSE FOR CERTIFICATE OF CORRECTION

Paper No.: X

DATE : July 23, 2008

TO SPE OF : ART UNIT 2863

SUBJECT : Request for Certificate of Correction for Appl. No.: 10/817169 Patent No.: 7376530 B2

A response is requested with respect to a request for a certificate of correction.

With respect to the change(s) requested to correct Office and/or Applicant's errors, should the patent read as shown in the certificate of correction attached herewith or the COCIN document(s), in IFW images for the above-identified patented application? No new matter should be introduced, nor should the scope or meaning of the claims be changed.

If the response is for an IFW, within **7** days, please complete and forward the response, to the employee (named below) via scanning into application images, using document code **COCX**.

DO NOT SENT TO ATTORNEY

If the response is for a paper file wrapper, please complete the response and forward the response with the paper file wrapper, to the employee (named below), within **7** days, to:

Certificates of Correction Branch (CofC)
South Tower - 9A22
Palm Location 7580

You can fax the Directors/SPE response to 571-270-9990

LAMONTE NEWSOME
Certificates of Correction Branch
703-308-9390 ext. 112

Thank You For Your Assistance

The request for issuing the above-identified correction(s) is hereby:
Note your decision on the appropriate box.

☒ **Approved**	**All** changes apply.
☐ **Approved in Part**	Specify below which changes **do not** apply.
☐ **Denied**	State the reasons for denial below.

Comments: _____

ELISEO RAMOS-FELICIANO
SUPERVISORY PATENT EXAMINER
SPE

2863
Art Unit

UNITED STATES PATENT AND TRADEMARK OFFICE

Commissioner for Patents
United States Patent and Trademark Office
P.O. Box 1450
Alexandria, VA 22313-1450
www.uspto.gov

DUANE MORRIS LLP
IP DEPARTMENT
30 SOUTH 17TH STREET
PHILADELPHIA PA 19103-4196

COPY MAILED

JAN 16 2007

OFFICE OF PETITIONS

In re Application of
Scott Garner
Application No. 10/817,170
Filed: April 2, 2004
Attorney Docket No. H1799-00229

DECISION ON PETITION
TO WITHDRAW
FROM RECORD

This is a decision on the Request to Withdraw as attorney or agent of record under 37 C.F.R. § 1.36(b) filed October 3, 2006.

The request is **NOT APPROVED**.

A grantable request to withdraw as attorney/agent of record must be signed by every attorney/agent seeking to withdraw or contain a clear indication that one attorney is signing on behalf of another/others. A request to withdraw will not be approved unless at least 30 (thirty) days would remain between the date of approval and the later of the expiration date of a time to file a response or the expiration date of the maximum time period which can be extended under 37 C.F.R. § 1.136(a).

The Office cannot approve the request at this time since the reasons provided do not meet any of the conditions under the mandatory or permissive categories enumerated in 37 CFR 10.40. Section 10.40 of Title 37 of the Code of Federal Regulation states, "[a] practitioner shall not withdraw from employment in a proceeding before the Office without permission from the Office[.]" More specifically, 37 CFR 10.40 states, "[i]f paragraph (b) of this section is not applicable, a practitioner may not request permission to withdraw in matter pending before the Office unless such request or such withdrawal is" for one the permissive reasons listed in 37 CFR 10.40(c). The reasons set forth in the request, "assignee of record has requested that the file be transferred", does not meet any of the conditions set forth in 37 CFR 10.40.

In order to request or take action in a patent matter, the assignee must establish its ownership of the patent to the satisfaction of the Director. In this regard, a Statement under 37 CFR 3.73(b) must have either: (i) documentary evidence of a chain of title from the original owner to the assignee (*e.g.*, copy of an executed assignment), and a statement affirming that the documentary evidence of the chain of title from the original owner to the assignee was or concurrently is being

submitted for recordation pursuant to § 3.11; or (ii) a statement specifying where documentary evidence of a chain of title from the original owner to the assignee is recorded in the assignment records of the Office (*e.g.*, reel and frame number).

All future communications from the Office will continue to be directed to the above-listed address until otherwise notified by applicant.

Telephone inquiries concerning this decision should be directed to undersigned at 571-272-1642.

April M. Wise
Petitions Examiner
Office of Petitions

cc: CHRISTOPER B. AUSTIN
MICHAEL BEST & FRIEDRICH, LLP
100 E. WISCONSIN AVENUE
SUITE 3300
MILWAUKEE, WI 53202

UNITED STATES PATENT AND TRADEMARK OFFICE

Commissioner for Patents
United States Patent and Trademark Office
P.O. Box 1450
Alexandria, VA 22313-1450
www.uspto.gov

COPY MAILED

FEB 20 2007

OFFICE OF PETITIONS

Paul D. Greeley, Esq.
Ohlandt, Greeley, Ruggiero & Perle, L.L.P.
One Landmark Square, 10th Floor
Stamford, CT 06901-2682

In re Application of Clevenger et al. :
Application No. 10/817,179 : Decision on Petition
Filing Date: April 2, 2004 :
Attorney Docket No. YOR920010518US1 :

This is a decision on the petition under 37 CFR 1.137(b), filed September 6, 2006, to revive the above-identified application.

The petition is **DISMISSED**.

The above-identified application became abandoned for failure to submit the issue fee and publication fee in a timely manner in reply to the Notice of Allowance mailed May 4, 2006, which set a statutory period for reply of three (3) months. Accordingly, the above-identified application became abandoned on August 5, 2006.

A grantable petition under 37 CFR 1.137(b) must be accompanied by:
(1) the required reply,
(2) the petition fee,
(3) a statement that the entire delay in filing the required reply from the due date for the reply until the filing of a grantable petition pursuant to 37 CFR 1.137(b) was unintentional, and
(4) a terminal disclaimer and fee if the application was filed on or before June 8, 1995 or if the application is a design application.

Petitioner has filed a Request for Continued Examination under §1.114 (and RCE Fee) and submission (an amendment) as the proposed reply. However, in an application or patent, abandoned or lapsed for failure to pay the issue fee or any portion thereof, the required reply must be the payment of the issue fee or any outstanding balance thereof.

37 CFR 1.137(c) states,

> In an application or patent, abandoned or lapsed for failure to pay the issue fee or any portion thereof, the required reply must include payment of the issue fee or any outstanding balance. In an application, abandoned for failure to pay the publication fee, the required reply must include payment of the publication fee.

Both 35 U.S.C. 41(a)(7) and 151 require payment of the issue fee as a condition of reviving an application abandoned or patent lapsed for failure to pay the issue fee. A reply that serves to continue prosecution in an application, such as an RCE, is not sufficient to satisfy either §151 or 41(a)(7). The Commissioner does not have the authority to waive these statutory requirements.

The petition contains an authorization to charge any necessary fees under 37 CFR 1.16 or 1.17 to petitioner's deposit account. However, an issue fee is a fee under 37 CFR 1.18. A transmittal letter contains a general authorization to charge fees. However, the Office normally interprets a general authorization to charge fees as covering fees under 37 CFR 1.16 or 1.17. Per MPEP 1306, the payment of the issue fee "must be specifically authorized by reference to the 'issue fee' or 'fees due under 37 CFR 1.18."

Petitioner must submit the issue fee for the petition to be revived.

Petitioner is advised that any issue fee paid with a request for reconsideration may be applied towards the issue fee required by a new Notice of Allowance. In order to have the issue fee applied towards any fees required by a future Notice of Allowance, written instructions including such a request must be filed in response to the new Notice of Allowance.

Any request for reconsideration must be submitted within TWO (2) MONTHS from the mail date of this decision. No further petition fee is required for the request. Extensions of time under 37 CFR 1.136(a) are permitted.

Further correspondence with respect to this matter should be addressed as follows:

By mail: Mail Stop Petition
Commissioner for Patents
P.O. Box 1450
Alexandria, VA 22313-1450

By facsimile: (571) 273-8300
Attn: Office of Petitions

By hand: U.S. Patent and Trademark Office
Customer Service Window
Randolph Building
401 Dulany Street
Alexandria, VA 22314

Telephone inquiries regarding this communication should be directed to Petitions Attorney Steven Brantley at (571) 272-3203.

Charles Steven Brantley
Senior Petitions Attorney
Office of Petitions

DATE: 8-28-07 APPLICATION NUMBER: 10/817,179

DOC CODE: PET.DEC.TC DOC DATE: _____

DELIVER THE ATTACHED FILE/DOCUMENT TO THE TC SCANNIG CENETER

CONTRACTOR: THE ATTACHED FILE/DOCUMENT MUST BE INDEXED AND SCANNED INTO IFW WITHIN 8 WORK HOURS; UPLOADING OF THE SCANNED IMAGES SHOULD OCCUR NO LATER THAN 16 WORK HOURS FOLLOWING RECEIPT OF THIS REQUEST

AFTER SCANNING, ORIGINAL DOCUMENTS SHOULD BE BOXED IN ACCORDANCE WITH INSTRUCTIONS

UNITED STATES PATENT AND TRADEMARK OFFICE

Commissioner for Patents
United States Patent and Trademark Office
P.O. Box 1450
Alexandria, VA 22313-1450
www.uspto.gov

Paul D. Greeley, Esq.
Ohlandt, Greeley, Ruggiero & Perle, L.L.P.
One Landmark Square, 10th Floor
Stamford, CT 06901-2682

COPY MAILED

AUG 30 2007

OFFICE OF PETITIONS

In re Application of Clevenger et al. :
Application No. 10/817,179 :
Filing Date: April 2, 2004 :
Attorney Docket No. YOR920010518US1 :

Decision on Petition

This is a decision on the petition under 37 CFR 1.137(b), filed April 17, 2007, to revive the above-identified application.

The petition is **granted**.

The above-identified application became abandoned for failure to submit the issue fee and publication fee in a timely manner in reply to the Notice of Allowance mailed May 4, 2006, which set a statutory period for reply of three (3) months. Accordingly, the above-identified application became abandoned on August 5, 2006.

Petitioner has submitted the required petition fee. Petitioner has submitted the required reply in the form of the issue fee and a RCE. 37 CFR 1.137(b)(3) requires "a statement that the entire delay in filing the required reply from the due date for the reply until the filing of a grantable petition pursuant to 37 CFR 1.137(b) [was] unintentional." To the extent any statement of delay in the petition varies from this exact language, the statement will be construed as the equivalent of the statement above. If the entire delay from the due date for the reply until the filing of a grantable petition was not unintentional, petitioner must notify the Office.

Petitioner has met the requirements to revive the above-identified application pursuant to 37 CFR 1.137(b). Therefore, the petition is granted and the application is revived.

Technology Center Art Unit 2818 will be informed of the instant decision, the RCE will be entered, and the application will be further examined in due course.

Telephone inquiries regarding this communication should be directed to Petitions Attorney Steven Brantley at (571) 272-3203.

Charles Steven Brantley
Senior Petitions Attorney
Office of Petitions

UNITED STATES PATENT AND TRADEMARK OFFICE

Commissioner for Patents
United States Patent and Trademark Office
P.O. Box 1450
Alexandria, VA 22313-1450
www.uspto.gov
DIW 02-05

BURNS DOANE SWECKER & MATHIS L L P
POST OFFICE BOX 1404
ALEXANDRIA VA 22313-1404

COPY MAILED

FEB 14 2005

OFFICE OF PETITIONS

In re Application of	:	
Crandall, Smallwood, and Hobbs	:	DECISION REFUSING STATUS
Application No. 10/817,181	:	UNDER 37 CFR 1.47(a)
Filed: 2 April, 2004	:	
Atty Docket No. 033859-008	:	

This is in response to the petition filed under 37 CFR 1.47(a) on 18 January, 2005.

The petition is **DISMISSED**.

Rule 47 applicant is given TWO MONTHS from the mailing date of this decision to reply, correcting the below-noted deficiencies. Any reply should be entitled "Request for Reconsideration of Petition Under 37 CFR 1.47(a)," and should only address the deficiencies noted below, except that the reply may include an oath or declaration executed by the non-signing inventor. **FAILURE TO RESPOND WILL RESULT IN ABANDONMENT OF THE APPLICATION.** Extensions of time may be obtained in accordance with 37 CFR 1.136(a).

The above-identified application was filed on 2 April, 2004, without an executed oath or declaration. Accordingly, on 18 June, 2004, a Notice to File Missing Parts of Nonprovisional Application was mailed, requiring an executed oath or declaration and a surcharge for its late filing. A two (2)-month period for reply was set.

In response, on 18 January, 2005, petitioners filed a five (5) month extension of time accompanied by the late-filing surcharge, the present petition, and a declaration naming Eral F. Crandall, Robert C. Smallwood, Sr., and Christopher M. Hobbs as as joint inventors and signed by joint inventors Crandall and Smallwood on behalf of themselves and non-signing joint inventor Hobbs.

Petitioners assert that a copy the declaration was sent to the last known address of joint inventor Hobbs. Petitioners further state that attempts to locate Hobbs by telephone and email, and attempts to find a more recent address for non-signing inventor Hobbs had been unsuccessful.

A grantable petition under 37 CFR 1.47(a) requires:

(1) proof that the non-signing inventor cannot be reached or located, notwithstanding diligent effort, or refuses to sign the oath or declaration after having been presented with the application papers (specification, claims and drawings);

(2) an acceptable oath or declaration in compliance with 35 U.S.C. §§ 115 and 116;

(3) the petition fee;

(4) a surcharge of $130 or $65 (small entity) if the petition and/or declaration is not filed at the time of filing the application, and

(5) a statement of the last known address of the non-signing inventor.

The petition lacks items (1) and (5).

In regards to item (1), petitioners have not shown that joint inventor Hobbs was sent or presented with a copy of the application as filed (specification, including claims, drawings, if any, and the declaration).[1]

Petitioners may show proof that a copy of the application was sent or given to the non-signing inventors for review by providing a copy of the cover letter transmitting the application papers (specification, including claims, drawings, if any, and the declaration) to the non-signing inventors or details given in an affidavit or declaration of facts by a person having first-hand knowledge of the details.

If the application is returned as undeliverable, petitioners should present a copy of the envelope showing that the application sent to the last known address of the non-signing inventors was returned as undeliverable by the post office.

Likewise, before a *bona fide* refusal to sign the declaration can be alleged, petitioners must show that a copy of the application was sent or given to the non-signing inventor. If the inventor refuses in writing, petitioners must submit a copy of that

[1] MPEP 409.03(d).

written refusal with any renewed petition. If the refusal was made orally to a person, then that person must provide details of the refusal in an affidavit or declaration of fact.

With regard to Hobbs' last known address, the last known address is that address at which the inventor customarily receives mail.[2] Ordinarily, the last known address will be the last known residence of the non-signing inventor.[3] If a different last known address is determined for one or more of the joint inventors, that address should be provided with any renewed petition.

Further correspondence with respect to this matter should be addressed as follows:

By mail: Mail Stop Petition
Commissioner for Patents
P.O. Box 1450
Alexandria, VA 22313-1450

By FAX: (703) 872-9306
Attn: Office of Petitions

By hand: Customer Service Window
Mail Stop Petition
Randolph Building
401 Dulany Street
Alexandria, VA 22314

The petition fee of $200.00 will be charged to counsel's deposit account, No. 02-4800 as authorized in the present petition.

Telephone inquiries related to this decision should be directed to the undersigned at 571-272-3231.

D Wood
Douglas I. Wood
Senior Petitions Attorney
Office of Petitions

---

[2] See MPEP 605.03.

[3] MPEP 409.03(e).

UNITED STATES PATENT AND TRADEMARK OFFICE

Commissioner for Patents
United States Patent and Trademark Office
P.O. Box 1450
Alexandria, VA 22313-1450
www.uspto.gov
DIW May-05

BURNS DOANE SWECKER & MATHIS L L P
POST OFFICE BOX 1404
ALEXANDRIA VA 22314

COPY MAILED

MAY 0 5 2005

OFFICE OF PETITIONS

In re Application of	:	
Crandall, Smallwood, and Hobbs	:	DECISION ACCORDING STATUS
Application No. 10/817,181	:	UNDER 37 CFR 1.47(a)
Filed: 2 April, 2004	:	
Atty Dckt No. 033859-008	:	

This is in response to the renewed petition filed under 37 CFR 1.47(a) on 13 April, 2005.

The petition is **GRANTED**.

Petitioners have shown that the non-signing inventor, Christopher M. Hobbs, has refused to join in the filing of the above-identified application after having been sent a copy of the application papers. Specifically, the petitioners have established that a copy of the application papers were sent to joint inventor Hobbs at his last known address, but that he failed to execute and return the declaration naming him as a joint inventor along with Earl F. Campbell and Robert C. Smallwood, Sr.

The above-identified application and papers have been reviewed and found in compliance with 37 CFR 1.47(a). This application is hereby accorded Rule 1.47(a) status.

As provided in Rule 1.47(c), this Office will forward notice of this application's filing to the non-signing inventor at the address given in the Declaration. Notice of the filing of this application will also be published in the *Official Gazette*.

The application is being referred to the Office of Initial Patent Examination for further processing.

Telephone inquiries related to this decision should be directed to the undersigned at 571-272-3231.

DWood

Douglas I. Wood
Senior Petitions Attorney
Office of Petitions

UNITED STATES PATENT AND TRADEMARK OFFICE

Commissioner for Patents
United States Patent and Trademark Office
P.O. Box 1450
Alexandria, VA 22313-1450
www.uspto.gov
DIW May-05

Christopher Hobbs
5904 Coverdale Way, Apt. A
Alexandria, VA 22310

COPY MAILED

MAY 0 5 2005

OFFICE OF PETITIONS

In re Application of
Crandall et al.
Application No. 10/817,181
Filed: 2 April, 2004
For: COMPACT FLUORESCENT LAMP

Dear Mr. Hobbs:

You are named as a joint inventor in the above identified United States patent application, filed under the provisions of 35 U.S.C. 116 (United States Code), and 37 CFR 1.47(a), Rules of Practice in Patent Cases. Should a patent be granted on the application you will be designated therein as a joint inventor.

As a named inventor you are entitled to inspect any paper in the file wrapper of the application, order copies of all or any part thereof (at a prepaid cost per 37 CFR 1.19) or make your position of record in the application. Alternatively, you may arrange to do any of the preceding through a registered patent attorney or agent presenting written authorization from you. If you care to join the application, counsel of record (see below) would presumably assist you. Joining in the application would entail the filing of an appropriate oath or declaration by you pursuant to 37 CFR 1.63.

Telephone inquiries regarding this communication should be directed to the undersigned at 571/272-3231. Requests for information regarding your application should be directed to the File Information Unit at 703/308-2733. Information regarding how to pay for and order a copy of the application, or a specific paper in the application, should be directed to Certification Division at 703/308-9726 or 1-800-972-6382 (outside the Washington D.C. area).

D Wood

Douglas I. Wood
Senior Petitions Attorney
Office of Petitions

BURNS DOANE SWECKER AND MATHIS LLP
POST OFFICE BOX 1404
ALEXANDRIA VA 22313-1404

UNITED STATES PATENT AND TRADEMARK OFFICE

Commissioner for Patents
United States Patent and Trademark Office
P.O. Box 1450
Alexandria, VA 22313-1450
www.uspto.gov

ROYLANCE, ABRAMS, BERDO & GOODMAN, L.L.P.
1300 19TH STREET, N.W.
SUITE 600
WASHINGTON, DC 20036

COPY MAILED

JUN 06 2007

OFFICE OF PETITIONS

In re Application of Crandall et al. :
Application No. 10/817,181 : Decision on Petition
Filing Date: April 2, 2004 :
Attorney Docket No. 52943 :

This is a decision on the petition under 37 CFR 1.137(b), filed January 12, 2007, to revive the above-identified application.

The petition is **granted**.

The above-identified application became abandoned for failure to reply in a timely manner to the non-final Office action mailed June 5, 2005, which set a shortened statutory period for reply of three (3) months. An extension of time under the provisions of 37 CFR 1.136(a) was not obtained. Accordingly, the above-identified application became abandoned on September 6, 2005. A Notice of Abandonment was mailed on December 28, 2005.

The instant petition requests revival of the application.

Petitioner has submitted the required petition fee of $750. Petitioner has submitted a reply to the non-final Office action mailed June 5, 2005. Petitioner has stated the entire delay in filing the required reply from the due date for the reply until the filing of a grantable petition pursuant to 37 CFR 1.137(b) was unintentional.

Petitioner has met the requirements to revive the above-identified application pursuant to 37 CFR 1.137(b). Therefore, the petition is granted and the application is revived.

Petitioner submitted $510 for a three-month extension of time. Payment for an extension of time is unnecessary when reviving an application. Therefore, the $510 has been credited to deposit account no. 18-2220.

Attorney Kevin Barner signed the instant petition. Barner was not an attorney of record at the time the application became abandoned. Therefore, it appears Barner was not in a position to have firsthand or direct knowledge of the facts and circumstances of the delay. Nevertheless, the statement by Barner that the entire delay was unintentional is being treated as having been made

as the result of a reasonable inquiry into the facts and circumstances of such delay.[1] In the event that such an inquiry has not been made, petitioner must make such an inquiry. If such inquiry results in the discovery that a portion of the delay from the due date for the reply until the filing of a grantable petition pursuant to 37 CFR 1.137(b) was unintentional, petitioner must notify the Office.

Technology Center Art Unit 2879 will be informed of the instant decision and the application will be further examined in due course.

Telephone inquiries regarding this communication should be directed to Petitions Attorney Steven Brantley at (571) 272-3203.

Charles Steven Brantley
Senior Petitions Attorney
Office of Petitions

[1] See Changes to Patent Practice and Procedure, 62 *Fed. Reg.* at 53160 and 53178; 1203 *Off. Gaz. Pat. Office* at 88 and 103 (responses to comments 64 and 109) (applicant obligated under 37 CFR 10.18 to inquire into the underlying facts and circumstances when providing the statement required by 37 CFR 1.137(b) to the Patent and Trademark Office).

UNITED STATES PATENT AND TRADEMARK OFFICE

Commissioner for Patents
United States Patent and Trademark Office
P.O. Box 1450
Alexandria, VA 22313-1450
www.uspto.gov

Amersham Biosciences Corp
Patent Department
800 Centennial Avenue
Piscataway NJ 08855

COPY MAILED

DEC 3 0 2004

OFFICE OF PETITIONS

In re Application of
Arini, et al.
Application No.: 10/817,213
Filed: April 2, 2004
Attorney Docket No.: PA0385
For: METHOD OF, AND COMPUTER SOFTWARE FOR, CLASSIFICATION OF CELLS INTO SUBPOPULATIONS

DECISION REFUSING STATUS UNDER 37 CFR 1.47(a)

This is a decision on the petition under 37 CFR 1.47(a), filed October 29, 2004 (certificate of mailing date October 27, 2004).

The petition is **DISMISSED**.

Any request for reconsideration of this decision must be submitted within TWO (2) MONTHS from the mail date of this decision. Extensions of time under 37 CFR 1.136(a) are permitted. Any response should be entitled "Request for Reconsideration of Petition Under 37 CFR 1.47(a)" and may include an oath or declaration executed by the inventor. **Failure to respond will result in abandonment of the application.**

The above-identified application was filed on April 2, 2004 without an executed oath or declaration. Accordingly, on May 24, 2004, a "Notice to File Missing Parts of Nonprovisional Application" was mailed, requiring an executed oath or declaration and a surcharge for its late filing.

In response, on October 29, 2004 (certificate of mailing date October 27, 2004), a petition for a four month extension of time and required fee, a declaration executed by 8 of 9 joint inventors, the surcharge, the petition fee, and the instant petition were filed. A statement from Bailiff Jim Marlow of the City of Niagara Falls in the Regional Municipality of Niagara, Ontario, Canada accompanies the petition. Mr. Marlow explains that when he attempted to deliver a package at the last known address of the non-signing inventor, Jurek Cybuch, that the current owner told him that Mr. Cybuch had died and that the previous owner, Ms. Kateryna Turczyn, had sold the house and moved to Europe.

A grantable petition under 37 CFR 1.47(a) requires

(1) a petition including proof of the pertinent facts establishing that the joint inventor(s)/legal representative refuses to join, or cannot be found or reached after diligent effort,
(2) a proper oath or Declaration executed by the available joint inventor(s),
(3) the fee of $130 as specified in 37 CFR § 1.17(h), and
(4) the last known address of the omitted inventor(s)/legal representative.

This petition lacks item (1), (2), and (4) above.

As to item (1), Rule 47 has no application to a deceased inventor. MPEP 409.03(c) However, Rule 47 does apply where a legal representative of a deceased inventor cannot be found or reached after diligent effort, or has refused to make application. Applicant has failed to establish that the legal representative of the deceased inventor cannot be located or has refused to sign the declaration. It appears that petitioners have made no effort to locate a legal representative for the deceased inventor.

The Office requires that the legal representative of the deceased inventor be provided with a complete copy of the application as filed. This includes the specification with claims, drawings, if any, and a declaration. See MPEP 409.03(d).

The legal representative must have the complete application in his/her possession in order to make an informed decision as to whether he/she joins in its filing. The legal representative cannot make the necessary statements -- "I have reviewed and understand.." etc.-- without looking at the application papers.

Once delivery of the complete application to the legal representative's last known address is established and no response has been received within a reasonable amount of time, applicant will have shown constructive refusal by the legal representative to join in the filing of the application.

If petitioners allege that the legal representative of the deceased inventor cannot be reached, petitioners must engage in diligent efforts to locate him/her. Where inability to find or reach a nonsigning inventor is alleged, an affidavit or declaration of facts should be submitted that fully describes the exact facts which are relied upon to establish that a diligent effort was made to locate the nonsigning inventor.

The affidavit or declaration of facts must be signed, where at all possible, by a person having *firsthand knowledge* of the facts recited therein. Statements based on hearsay will not normally be accepted

As to item (2), an oath or declaration for the patent application in compliance with 37 CFR 1.63 and 1.64 still has not been presented. The declaration contains no information for the legal representative. **Petitioners must submit another declaration that lists identifying information for the inventors, including the deceased inventor, and the legal representative. This new declaration must be executed by the signing inventors.** The identifying information must include: -- Name, Residence, Citizenship, and Post Office. An oath or declaration in compliance with 37 CFR 1.63 and 1.64 signed by the Rule 1.47 applicant on behalf of the deceased inventor's legal representative is REQUIRED. See MPEP 409.03(a).

As to (4) above, the last known address of the legal representative must be given. See MPEP 409.03(c).

Pursuant to petitioners' authorization, deposit account no. 50-2590 will be charged the $130.00 petition fee owed. The Office has already charged the $130.00 surcharge and the $1,530.00 four month extension of time fee to the same deposit account.

The application file does not indicate a change of address has been filed in this case, although the address given on the petition differs from the address of record. A change of address should be filed in this case in accordance with MPEP 601.03. A courtesy copy of this decision is being mailed to the address noted on the petition. However, until otherwise instructed, all future correspondence regarding this application will be mailed solely to the address of record.

Further correspondence with respect to this matter should be addressed as follows:

By mail: Mail Stop PETITION
Commissioner for Patents
Post Office Box 1450
Alexandria, VA 22313-1450

By hand: U.S. Patent and Trademark Office
220 20th Street S.
Customer Window, Mail Stop Petition
Crystal Plaza 2, Lobby, Room 1B03
Arlington, VA 22202

By FAX: (703) 872-9306 – ATTN: Office of Petitions

Telephone inquiries should be directed to the undersigned at (571) 272-3230.

E. Shirene Willis

E. Shirene Willis
Senior Petitions Attorney
Office of Petitions
Office of the Deputy Commissioner
for Patent Examination Policy

cc: AMERSHAM BIOSCIENCES CORP
800 CENTENNIAL AVENUE
P.O. BOX 1327
PISCATAWAY, NJ 08855-1327

UNITED STATES PATENT AND TRADEMARK OFFICE

Commissioner for Patents
United States Patent and Trademark Office
P.O. Box 1450
Alexandria, VA 22313-1450
www.uspto.gov

Amersham Biosciences Corp
Patent Department
800 Centennial Avenue
Piscataway NJ 08855

COPY MAILED

MAY 3 1 2005

OFFICE OF PETITIONS

In re Application of
Arini, et al.
Application No.: 10/817,213
Filed: April 2, 2004
Attorney Docket No.: PA0385
For: METHOD OF, AND COMPUTER SOFTWARE FOR, CLASSIFICATION OF CELLS INTO SUBPOPULATIONS

DECISION ACCORDING STATUS UNDER 37 CFR 1.47(a)

This is a decision on the reconsideration petition under 37 CFR 1.47(a), filed May 4, 2005 (certificate of mailing date May 2, 2005).

The petition is granted.

Petitioners have shown that the non-signing inventor, Jurek Cybuch, cannot be located. Specifically, the petitions and accompanying exhibits establishe that despite attempts to locate the inventor through the mail, through inquiries of his former employer, and through a visit to his last known address, that Mr. Cybuch cannot be located. Petitioners have dilgently searched for Mr. Cybuch. In addition, the undersigned ran a number of fruitless Internet searches for Mr. Cybuch. Mr. Cybuch's whereabout cannot be ascertained. Petitioners have submitted a declaration in compliance with 37 CFR 1.63 and 1.64.

This application and papers have been reviewed and found in compliance with 37 CFR 1.47(a). This application is hereby accorded Rule 1.47(a) status.

As provided in Rule 1.47(c), this Office will forward notice of this application's filing to the non-signing inventor at the address given in the petition. Notice of the filing of this application will also be published in the Official Gazette.

The application file does not indicate a change of address has been filed in this case, although the address given on the petition differs from the address of record. A change of address should be filed in this case in accordance with MPEP 601.03. A courtesy copy of this decision is being mailed to the address noted on the petition. However, until otherwise instructed, all future correspondence regarding this application will be mailed solely to the address of record.

After this decision is mailed, the above-identified application will be returned to the Office of Initial Patent Examination for further processing.

Telephone inquiries should be directed to the undersigned at (571) 272-3230.

E. Shirene Willis

E. Shirene Willis
Petitions Attorney
Office of Petitions

cc: AMERSHAM BIOSCIENCES CORP
800 CENTENNIAL AVENUE
P.O. BOX 1327
PISCATAWAY, NJ 08855-1327

UNITED STATES PATENT AND TRADEMARK OFFICE

Commissioner for Patents
United States Patent and Trademark Office
P.O. Box 1450
Alexandria, VA 22313-1450
www.uspto.gov

JUREK CYBUCH
500 GLENRIDGE AVENUE
ST. CATHERINES, ONTARIO
CANADA L2S 3A1

COPY MAILED

MAY 3 1 2005

OFFICE OF PETITIONS

In re Application of
Arini, et al.
Application No.: 10/817,213
Filed: April 2, 2004
Attorney Docket No.: PA0385
For: METHOD OF, AND COMPUTER SOFTWARE FOR, CLASSIFICATION OF CELLS INTO SUBPOPULATIONS

LETTER

Dear Mr. Cybuch:

You are named as a joint inventor in the above identified United States patent application, filed under the provisions of 35 U.S.C. 116 (United States Code), and 37 CFR 1.47(a), Rules of Practice in Patent Cases. Should a patent be granted on the application you will be designated therein as a joint inventor.

As a named inventor you are entitled to inspect any paper in the file wrapper of the application, order copies of all or any part thereof (at a prepaid cost per 37 CFR 1.19) or make your position of record in the application. Alternatively, you may arrange to do any of the preceding through a registered patent attorney or agent presenting written authorization from you. If you care to join the application, counsel of record (see below) would presumably assist you. Joining in the application would entail the filing of an appropriate oath or declaration by you pursuant to 37 CFR 1.63.

Requests for information regarding your application should be directed to the File Information Unit at (703)308-2733. Information regarding how to pay for and order a copy of the application, or a specific paper in the application, should be directed to Certification Division at (703)308-9726 or 1(800)972-6382 (outside the Washington D.C. area).

Telephone inquiries regarding this communication should be directed to the undersigned at (571) 272-3230.

E. Shirene Willis

E. Shirene Willis
Senior Petitions Attorney
Office of Petitions

ATTORNEY OF RECORD: Amersham Biosciences Corp
Patent Department
800 Centennial Avenue
Piscataway NJ 08855

UNITED STATES PATENT AND TRADEMARK OFFICE

UNITED STATES DEPARTMENT OF COMMERCE
United States Patent and Trademark Office
Address: COMMISSIONER FOR PATENTS
P.O. Box 1450
Alexandria, Virginia 22313-1450
www.uspto.gov

APPL NO.	FILING OR 371 (c) DATE	ART UNIT	FIL FEE REC'D	ATTY.DOCKET NO	DRAWINGS	TOT CLMS	IND CLMS
10/817,246	04/02/2004	2131	1064	MS#307521.01 (5107)	8	22	6

CONFIRMATION NO. 3039

CORRECTED FILING RECEIPT

OC000000014015622

000038779
SENNIGER, POWERS, LEAVIT & ROEDEL
ONE METROPOLITAN SQUARE, 16TH FLOOR
ST. LOUIS, MO 63102

Date Mailed: 10/06/2004

Receipt is acknowledged of this regular Patent Application. It will be considered in its order and you will be notified as to the results of the examination. Be sure to provide the U.S. APPLICATION NUMBER, FILING DATE, NAME OF APPLICANT, and TITLE OF INVENTION when inquiring about this application. Fees transmitted by check or draft are subject to collection. Please verify the accuracy of the data presented on this receipt. **If an error is noted on this Filing Receipt, please write to the Office of Initial Patent Examination's Filing Receipt Corrections, facsimile number 703-746-9195. Please provide a copy of this Filing Receipt with the changes noted thereon. If you received a "Notice to File Missing Parts" for this application, please submit any corrections to this Filing Receipt with your reply to the Notice. When the USPTO processes the reply to the Notice, the USPTO will generate another Filing Receipt incorporating the requested corrections (if appropriate).**

Applicant(s)

Kok Wai Chan, Bellevue, WA;
Wei Jiang, Kirkland, WA;
Wei-Quiang Michael Guo, Bellevue, WA;

Assignment For Published Patent Application

Microsoft Corporation

Power of Attorney: The patent practitioners associated with Customer Number **000038779**.

Domestic Priority data as claimed by applicant

Foreign Applications

If Required, Foreign Filing License Granted: 06/21/2004

The number of your priority application, to be used for filing abroad under the Paris Convention is,
US10/817,246

Projected Publication Date: 10/06/2005

Non-Publication Request: No

Early Publication Request: No

Title

Public key infrastructure scalability certificate revocation status validation

Preliminary Class

713

LICENSE FOR FOREIGN FILING UNDER
Title 35, United States Code, Section 184
Title 37, Code of Federal Regulations, 5.11 & 5.15

GRANTED

The applicant has been granted a license under 35 U.S.C. 184, if the phrase "IF REQUIRED, FOREIGN FILING LICENSE GRANTED" followed by a date appears on this form. Such licenses are issued in all applications where the conditions for issuance of a license have been met, regardless of whether or not a license may be required as set forth in 37 CFR 5.15. The scope and limitations of this license are set forth in 37 CFR 5.15(a) unless an earlier license has been issued under 37 CFR 5.15(b). The license is subject to revocation upon written notification. The date indicated is the effective date of the license, unless an earlier license of similar scope has been granted under 37 CFR 5.13 or 5.14.

This license is to be retained by the licensee and may be used at any time on or after the effective date thereof unless it is revoked. This license is automatically transferred to any related applications(s) filed under 37 CFR 1.53(d). This license is not retroactive.

The grant of a license does not in any way lessen the responsibility of a licensee for the security of the subject matter as imposed by any Government contract or the provisions of existing laws relating to espionage and the national security or the export of technical data. Licensees should apprise themselves of current regulations especially with respect to certain countries, of other agencies, particularly the Office of Defense Trade Controls, Department of State (with respect to Arms, Munitions and Implements of War (22 CFR 121-128)); the Office of Export Administration, Department of Commerce (15 CFR 370.10 (j)); the Office of Foreign Assets Control, Department of Treasury (31 CFR Parts 500+) and the Department of Energy.

NOT GRANTED

No license under 35 U.S.C. 184 has been granted at this time, if the phrase "IF REQUIRED, FOREIGN FILING LICENSE GRANTED" DOES NOT appear on this form. Applicant may still petition for a license under 37 CFR 5.12, if a license is desired before the expiration of 6 months from the filing date of the application. If 6 months has lapsed from the filing date of this application and the licensee has not received any indication of a secrecy order under 35 U.S.C. 181, the licensee may foreign file the application pursuant to 37 CFR 5.15(b).

UNITED STATES PATENT AND TRADEMARK OFFICE

SEP 18 2005

Commissioner for Patents
United States Patent and Trademark Office
P.O. Box 1450
Alexandria, VA 22313-1450
www.uspto.gov

DAVID K. LUCENTE
SEAGATE TECHNOLOGY LLC
INTELLECTUAL PROPERTY – COL2LGL
389 DISC DRIVE
LONGMONT, CO 80503

In re application of Grant Edward Carlson, et al. Application No. 10/817,266 Filed: April 2, 2004 For: REINFORCED SHELF STRUCTURE AND METHOD	: : : :	**DECISION ON PETITION TO MAKE SPECIAL (ACCELERATED EXAMINATION)**

This is in response to the petition filed on September 1, 2004 to make the above-identified application special on the basis of special examining procedure for certain new applications - accelerated examination as set forth in MPEP § 708.02 VIII.

The requirements for granting special status under this section are: (A) a petition to make special accompanied by the fee set forth in 37 CFR 1.17(i); (B) all claims being directed to a single invention, or an election without traverse if the Office determines that all the claims are not directed to a single invention; (C) a statement that a pre-examination search was made listing the field of search; (D) one copy of each of the references deemed most closely related to the subject matter encompassed by the claims if said references are not already of record; and (E) a detailed discussion of how the claimed subject matter is patentable over the references in accordance with 37 CFR 1.111 (b) and (c).

Since all of the requirements for special status under MPEP § 708.02 VIII have been met, the petition is **GRANTED**.

The examiner is directed (1) to make an interference search for possible interfering applications, (2) to promptly examine this application out of turn, and (3) if any interfering application is discovered, to examine such application simultaneously and state in the first official letter of such application that it is being taken out of turn because of a possible interference.

Petitioner is advised that this application will continue to be special, throughout its entire prosecution and pendency, including interference or appeal, if any, only if petitioner makes a prompt ***bona fide*** effort, in response to each Office action, to place the application in condition for allowance, even if it is necessary to conduct an interview with the examiner to accomplish this purpose.

SUMMARY: Petition to Make Special **GRANTED.**

Randolph A. Reese

Randolph A. Reese
Special Programs Examiner
Technology Center 3600
571-272-6619

RAR/dcg: 7/1/05

UNITED STATES PATENT AND TRADEMARK OFFICE

Commissioner for Patents
United States Patent and Trademark Office
P.O. Box 1450
Alexandria, VA 22313-1450
www.uspto.gov

EDWARD P. DUTKIEWICZ, ESQ.
EDWARD P. DUTKIEWICZ, P.A.
640 DOUGLAS AVENUE
DUNEDIN, FL 34698-7001

COPY MAILED

JUN 0 1 2007

OFFICE OF PETITIONS

In re Application of Governale et al. :
Application No. 10/817,280 :
Filing Date: April 2, 2004 :
Attorney Docket No. GD58/01 :

Decision on Petition

This is a decision on the petition under 37 CFR 1.137(b), filed January 3, 2007, to revive the above-identified application.

The petition is **granted**.

The above-identified application became abandoned for failure to submit the issue fee and in a timely manner in reply to the Notice of Allowance mailed September 25, 2006, which set a statutory period for reply of three (3) months. Accordingly, the above-identified application became abandoned on December 26, 2006.

The instant petition requests revival of the application.

Petitioner has met the requirements to revive the above-identified application pursuant to 37 CFR 1.137(b). Therefore, the petition is granted and the application is revived.

The Office of Publications will be informed of the instant decision and the application will be issued as a patent in due course.

Telephone inquiries regarding this communication should be directed to Petitions Attorney Steven Brantley at (571) 272-3203.

Charles Steven Brantley
Senior Petitions Attorney
Office of Petitions

UNITED STATES PATENT AND TRADEMARK OFFICE

Commissioner for Patents
United States Patent and Trademark Office
P.O. Box 1450
Alexandria, VA 22313-1450
www.uspto.gov

MCI, INC
TECHNOLOGY LAW DEPARTMENT
1133 19TH STREET NW, 10TH FLOOR
WASHINGTON, DC 20036

COPY MAILED

FEB 14 2005

OFFICE OF PETITIONS

In re Application of :
Dugan et al. :
Application No. 10/817,295 :
Filed: April 5, 2004 :
Attorney Docket No. COS9806C2 :

ON PETITION

This is a decision in response to the paper labeled "Miscellaneous Communication" filed July 6, 2004, which states the Notice of Missing Parts was incorrect in so far as the application was complete as filed.

The petition is **dismissed**.

A decision according status under 37 CFR 1.47(a) was mailed for application no. 09/420,666. The instant application is a continuation of application no. 10/040,320, which is a continuation of application no. 09/420,666.

Upon filing the instant application, petitioner had the option of filing a copy of the declaration from application no. 09/420,666 along with a copy of the decision according status under 37 CFR 1.47(a) from application no. 09/420,666.

37 CFR 1.63(d)(3) states,

> Where the executed oath or declaration of which a copy is submitted for a continuation or divisional application was originally filed in a prior application accorded status under § 1.47, the copy of the executed oath or declaration for such prior application must be accompanied by:
> (i) A copy of the decision granting a petition to accord § 1.47 status to the prior application . . . .

Upon filing the instant application, petitioner filed a copy of the declaration from application no. 09/420,666 but did not file a copy of the decision from application no. 09/420,666 or file a new petition under 37 CFR 1.47.

Petitioner argues that the application was complete on the filing date. However, the filing of the declaration not signed by all the inventors, without the submission of a copy of the prior decision, was not a proper submission of a declaration in compliance with 37 CFR 1.63.

The June 24, 2004, Notice to File Missing Parts has not been shown to be defective, and therefore will not be vacated.

For the reasons above, the submission of $130 for the late filing of an oath/declaration is in fact necessary. A review of the file history indicates the fee was charged to petitioner's deposit account on July 9, 2004. A refund of the fee will not be issued.

The declaration *along with* the papers filed on July 6, 2004, constitute a proper reply to the Notice and the file is now in compliance with 37 CFR 1.63(d) and MPEP 201.06(c).

For the foregoing reasons, the papers have been reviewed and found in compliance with 37 CFR 1.47(a). This application is hereby accorded Rule 1.47(a) status.

The application has been forwarded to Technology Center Art Unit 2153 and will be reviewed by the examiner in due course.

Telephone inquiries should be directed to Petitions Attorney Steven Brantley at (571) 272-3203.

Charles Steven Brantley
Petitions Attorney
Office of Petitions

UNITED STATES PATENT AND TRADEMARK OFFICE

COMMISSIONER FOR PATENTS
UNITED STATES PATENT AND TRADEMARK OFFICE
P.O. BOX 1450
ALEXANDRIA, VA 22313-1450
www.uspto.gov

ATTENTION: IP PROSECUTION
HOWREY SIMON ARNOLD & WHITE, LLP
BOX NO. 34
1299 PENNSYLVANIA AVENUE, N.W.
WASHINGTON, DC 20004-2402

COPY MAILED
JUN 13 2006
OFFICE OF PETITIONS

In re Application of	:	
Stephen S. Palmer, et al.	:	
Application No. 10/817,312	:	ON PETITION
Filed: April 1, 2004	:	
Attorney Docket No. 05558.0011.NPUS04	:	

This is a decision on the petition under 37 CFR 1.313(c)(2), filed June 7, 2006, to withdraw the above-identified application from issue after payment of the issue fee.

The petition is **GRANTED**.

The above-identified application is withdrawn from issue for consideration of a submission under 37 CFR 1.114 (request for continued examination). See 37 CFR 1.313(c)(2).

Petitioner is advised that the issue fee paid on February 28, 2006, in the above-identified application cannot be refunded. If, however, the above-identified application is again allowed, petitioner may request that it be applied towards the issue fee required by the new Notice of Allowance. [1]

It is noted that the address given on the petition differs from the address of record. If appropriate, a change of address should be filed in this case in accordance with MPEP 601.03. A courtesy copy of this decision is being mailed to the address noted on the petition. However, until otherwise instructed, all future correspondence regarding this application will be mailed solely to the address of record.

Telephone inquiries relating to this decision should be directed to the undersigned at (571) 272-3204.

[1]The request to apply the issue fee to the new Notice may be satisfied by completing and returning the new Issue Fee Transmittal Form PTOL-85(b), which includes the following language thereon: "Commissioner for Patents is requested to apply the Issue Fee and Publication Fee (if any) or re-apply any previously paid issue fee to the application identified above." Petitioner is advised that, whether a fee is indicated as being due or not, the Issue Fee Transmittal Form **must** be completed and timely submitted to avoid abandonment. Note the language in bold text on the first page of the Notice of Allowance and Fee(s) Due (PTOL-85).

The application is being referred to Technology Center AU 1653 for further processing of the request for continued examination under 37 CFR 1.114 filed June 7, 2006.

Sherry D. Brinkley
Petitions Examiner
Office of Petitions

cc: DAVID W. CLOUGH, PH.D.
HOWREY SIMON ARNOLD & WHITE, LLP
321 N. CLARK STREET, SUITE 3400
CHICAGO, IL 60610

UNITED STATES PATENT AND TRADEMARK OFFICE

Commissioner for Patents
United States Patent and Trademark Office
P.O. Box 1450
Alexandria, VA 22313-1450
www.uspto.gov

Date : June 13, 2006

TO : Director, Office of Patent Publication

FROM : Office of the Deputy Commissioner for Patent Examination Policy

SUBJECT : Withdrawal from Issue of

Applicant(s) : Stephen S. Palmer, et al.
Application No. : 10/817,312
Filed : April 1, 2004

The above-identified application has been assigned Patent No. 7,067,478 and an issue date of June 27, 2006.

It is hereby directed that this application be withdrawn from issue at the request of the applicant.

Do not refund the issue fee.

The following erratum should be published in the Official Gazette if the above-identified application is published in the OG of June 27, 2006:

> "All reference to Patent No. 7,067,478 to STEPHEN S. PALMER, ET AL. of MASSACHUSETTS for INHIBITORS OF PHOSPHODIESTERASES IN INFERTILITY appearing in the Official Gazette of June 27, 2006, should be deleted since no patent was granted."

Sherry D. Brinkley
Petitions Examiner
Office of Petitions

cc: Paul Harrison, Crystal Park 3-44I (FAX-306-2737)
Deneise Boyd, Crystal Park 2, Suite 1100 (FAX-308-5413)
Mary Louise McAskill, Crystal Park 3-910 (FAX 305-4372)
Niomi Farmer, Crystal Park 3-9I0 (FAX-305-4372)
Mary E. Johnson (Cookie), P/OCS, CM1-6D07
Duane K.Davis, P/OCS, CM1-6A07
Tamara K. Greene, PK3-910

UNITED STATES PATENT AND TRADEMARK OFFICE

COMMISSIONER FOR PATENTS
UNITED STATES PATENT AND TRADEMARK OFFICE
P.O. BOX 1450
ALEXANDRIA, VA 22313-1450
www.uspto.gov

COPY MAILED
JUN 26 2006
OFFICE OF PETITIONS

GREGORY J. KOERNER
REDWOOD PATENT LAW
1291 EAST HILLSDALE BOULEVARD, SUITE 205
FOSTER CITY, CA 94404

In re Application of	:	
Porter Mitchell, et al.	:	
Application No. 10/817,314	:	DECISION ON REQUEST
Filed: April 2, 2004	:	TO WITHDRAW
Attorney Docket No. M109US-GENSA	:	FROM RECORD
	:	

This is a decision on the Request to Withdraw as attorney or agent of record under 37 CFR §1.36(b), filed January 5, 2006.

The request is **NOT APPROVED** as moot.

A review of the file record indicates that the power of attorney to Gregory J. Koerner and all the other attorneys/agents of record was revoked by the assignee of the patent application on January 6, 2006. Accordingly, the request to withdraw under 37 CFR §1.36(b) is moot.

It is noted that a revocation and power of attorney was subsequently filed on January 25, 2006. However, the revocation and power of attorney is not acceptable since it is signed by one of the four joint inventors.

All future communications from the Office will continue to be directed to the below-listed address until otherwise notified by applicant.

There is an outstanding Office action mailed May 5, 2006 that requires a reply from the applicant.

Telephone inquires concerning this decision should be directed to Sherry D. Brinkley at 571-272- 3204.

Sherry D. Brinkley
Petitions Examiner
Office of Petitions

Conferee:

cc: SERAFINI ASSOCIATES
7660 FAY AVE. STE H378
LA JOLLA, CA 92037

UNITED STATES PATENT AND TRADEMARK OFFICE

Commissioner for Patents
United States Patent and Trademark Office
P.O. Box 1450
Alexandria, VA 22313-1450
www.uspto.gov

THELEN REID & PRIEST LLP
P.O. BOX 640640
SAN JOSE CA 95164-0640

COPY MAILED

OCT 10 2006

OFFICE OF PETITIONS

In re Application of

SAXTON, et al.
Application No. 10/817,329
Filed: April 2, 2004
Attorney Docket No. SNX-0039

DECISION ON PETITION
TO WITHDRAW
FROM RECORD

This is a decision on the Request to Withdraw as attorney or agent of record under 37 C.F.R. § 1.36(b), filed May 30, 2006.

The request is **NOT APPROVED**.

A grantable request to withdraw as attorney/agent of record must be signed by every attorney/agent seeking to withdraw or contain a clear indication that one attorney is signing on behalf of another/others. A request to withdraw will not be approved unless at least 30 (thirty) days would remain between the date of approval and the later of the expiration date of a time to file a response or the expiration date of the maximum time period which can be extended under 37 C.F.R. § 1.136(a).

The request cannot be approved because no reasons for withdrawal have been provided. The Office cannot, at this time, determine whether practitioner's request is one of the mandatory or permissive reasons enumerated in 37 CFR 10.40. Any subsequent requests must include reasons for withdrawal. Please note that there is a space provided for on PTO/SB/83 (Request to Withdraw as Attorney or Agent) to supply practitioner's reasons.

All future communications from the Office will continue to be directed to the above-listed address until otherwise notified by applicant.

Telephone inquiries concerning this decision should be directed to Monica A. Graves at 571-272-7253.

for David Bucci
Petitions Examiner
Office of Petitions

cc: **L. Grant Foster**
HOLLAND & HART LLP
60 E. South Temple, Suite 2000
Salt Lake City, UT 84111

UNITED STATES PATENT AND TRADEMARK OFFICE

Commissioner for Patents
United States Patent and Trademark Office
P.O. Box 1450
Alexandria, VA 22313-1450
www.uspto.gov

DUANE MORRIS, LLP
IP DEPARTMENT
ONE LIBERTY PLACE
PHILADELPHIA PA 19103-7396

COPY MAILED

NOV 09 2004

OFFICE OF PETITIONS

In re Application of Murray Toas, Greg Mattix, John Forsythe and Dave Pacana Application No. 10/817,342 Filed: April 2, 2004 Attorney Docket Number: D0932-00457[I-8882]	DECISION GRANTING STATUS UNDER 37 CFR 1.47(a)

This is in response to the petition under 37 CFR 1.47(a), filed October 21, 2004.

The petition is GRANTED.

Petitioner has shown the non-signing inventor John Forsythe has refused to join in the filing of the above-identified application after having been presented with the application papers. The petition attest a copy of the application papers was sent to non-signing inventor's last known address. The non-signing inventor's failure to respond to the application mailing sufficiently establishes he refuses to execute the application papers.

The above-identified application and papers have been reviewed and found in compliance with 37 CFR 1.47(a). This application is hereby accorded Rule 1.47(a) status.

As provided in Rule 1.47(c), this Office will forward notice of this application's filing to the non-signing inventor at the address given in the petition. Notice of the filing of this application will also be published in the Official Gazette.

This application is being forwarded to the Office of Initial Patent Examination for further processing.

Telephone inquiries related to this decision may be directed to the undersigned at (571) 272-3215.

Charlema R. Grant

Charlema R. Grant
Petitions Attorney
Office of Petitions

UNITED STATES PATENT AND TRADEMARK OFFICE

Commissioner for Patents
United States Patent and Trademark Office
P.O. Box 1450
Alexandria, VA 22313-1450
www.uspto.gov

John Forsythe
8400 S. Maryland Parkway, Apt.1064
Las Vegas, NV 89123

COPY MAILED

NOV 09 2004

OFFICE OF PETITIONS

In re Application of
Murray Toas, Greg Mattix, John Forsythe and Dave Pacana
Application No. 10/817,342
Filed: April 2, 2004
Attorney Docket Number: D0932-00457[I-8882]

LETTER

Dear Mr. Forsythe:

You are named as a joint inventor in the above-identified United States patent application filed under the provisions of 35 U.S.C. § 116 (United States Code) and 37 C.F.R. § 1.47(a), Rules of Practice in Patent Cases. Should a patent be granted on the application you will be designated therein as a joint inventor.

As a named inventor you are entitled to inspect any paper in the file wrapper of the application, order copies of all or any part thereof (at a prepaid cost as per 37 C.F.R. § 1.19) or make your position of record in the application. Alternatively, you may arrange to do any of the preceding through a registered patent attorney or agent presenting written authorization from you. If you care to join the application, counsel of record (see below) would presumably assist you. Joining in the application would entail the filing of an appropriate oath or declaration by you pursuant to 37 C.F.R. § 1.63.

Telephone inquiries regarding this communication should be directed to Petitions Attorney Charlema R. Grant at (571)272-3215. Requests for information regarding your application should be directed to the File Information Unit at (703) 308-2733. Information regarding how to pay for and order a copy of the application, or a specific paper in the application, should be directed to Certification Division at (703) 308-9726 or 1-800-972-6382 (outside the Washington D.C. area).

Charlema R. Grant

Charlema R. Grant
Petitions Attorney
Office of Petitions

JOSEPH A. POWERS
DUANE MORRIS, LLP
IP DEPARTMENT
ONE LIBERTY PLACE
PHILADELPHIA PA 19103-7396

UNITED STATES PATENT AND TRADEMARK OFFICE

Commissioner for Patents
United States Patent and Trademark Office
P.O. Box 1450
Alexandria, VA 22313-1450
www.uspto.gov

BLAKELY SOKOLOFF TAYLOR & ZAFMAN
12400 WILSHIRE BOULEVARD
SEVENTH FLOOR
LOS ANGELES CA 90025-1030

COPY MAILED

NOV 0 2 2004

OFFICE OF PETITIONS

In re Application of	:	
Rhee, et al.	:	
Application No. 10/817,363	:	NOTICE
Filed: April 1, 2004	:	
Attorney Docket No. 005895.P054	:	

This is a notice regarding your request for acceptance of a fee deficiency submission under 37 CFR 1.28, filed September 20, 2004 (certificate of mailing date September 15, 2004). On September 1, 1998, the Court of Appeals for the Federal Circuit held that 37 CFR 1.28(c) is the sole provision governing the time for correction of the erroneous payment of the issue fee as a small entity. **See DH Technology v. Synergystex International, Inc. 154 F.3d 1333, 47 USPQ2d 1865 (Fed. Cir. Sept. 1, 1998).**

The Office no longer investigates or rejects original or reissue applications under 37 CFR 1.56. **1098 Off. Gaz. Pat. Office 502 (January 3, 1989)**. Therefore, nothing in this Notice is intended to imply that an investigation was done.

Your fee deficiency submission under 37 CFR 1.28 is hereby **ACCEPTED**. Office records have been changed to show this application has large entity status.

Inquiries related to this communication should be directed to the undersigned at (571) 272-3230.

This file is being returned to Technology Center GAU 2661.

E. Shirene Willis

E. Shirene Willis
Petitions Attorney
Office of Petitions
Office of the Deputy Commissioner
for Patent Examination Policy

UNITED STATES PATENT AND TRADEMARK OFFICE

Commissioner for Patents
United States Patent and Trademark Office
P.O. Box 1450
Alexandria, VA 22313-1450
www.uspto.gov

NOV - 8 2004

MAILED

NOV - 8 2004

OFFICE OF THE DIRECTOR
TC 3600

BRIAN ROFFE, ESQ
11 Sunrise Plaza
Suite 303
Valley Stream, NY 11580-6170

In re application of
David S. Breed
Application No. 10/817,379
Filed: April 02, 2004
For: KNEE BOLSTER AIRBAG SYSTEM

DECISION ON PETITION TO MAKE SPECIAL (APPLICANT'S AGE)

This is a decision on the petition submitted on October 06, 2004, under 37 CFR 1.102 (c) to make the above-identified application special under the accelerated examination procedure set forth in MPEP 708.02, Section IV: Applicant's Age.

The petition is **GRANTED**.

An application may be accorded special status upon the filing of a petition providing evidence showing that the applicant is at least 65 years old. Such a showing may be provided by evidence such as a birth certificate or a statement from the applicant.

The evidence submitted with the petition is a copy of Mr. Breed's passport indicating that he is at least 65 years of age and a copy of

The examiner is directed (1) to make an interference search for possible interfering applications, (2) to promptly examine this application out of turn, and (3) if any interfering application is discovered, to examine such application simultaneously and state in the first official letter of such application that it is being taken out of turn because of a possible interference.

Petitioner is advised that this application will continue to be special, throughout its entire prosecution and pendency, including interference or appeal, if any, only if petitioner makes a prompt ***bona fide*** effort, in response to each Office action, to place the application in condition for allowance, even if it is necessary to conduct an interview with the examiner to accomplish this purpose.

SUMMARY: Petition to Make Special **Granted.**

Steven N. Meyers
Special Programs Examiner
Patent Technology Center 3600
(703) 308-3868

SNM/pav: 11/03/04

UNITED STATES PATENT AND TRADEMARK OFFICE

Commissioner for Patents
United States Patent and Trademark Office
P.O. Box 1450
Alexandria, VA 22313-1450
www.uspto.gov

BLAKELY SOKOLOFF TAYLOR & ZAFMAN
1279 OAKMEAD PARKWAY
SUNNYVALE CA 94085-4040

COPY MAILED

NOV 16 2007

OFFICE OF PETITIONS

In re Application of	:	
Alessandro Manneschi	:	
Application No.: 10/817387	:	DECISION ON
Filing or 371(c) Date: 04/01/2004	:	PETITION
Attorney Docket Number: 15675P521	:	

This is a decision in response to the Petition to Revive and Request to Withdraw Abandoned Status of Application, filed October 9, 2007. The petition is properly treated under 37 CFR § 1.181.

This Petition is hereby **dismissed**.

Any further petition must be submitted within TWO (2) MONTHS from the mail date of this decision. Extensions of time under 37 CFR 1.136(a) are permitted. The reconsideration request should include a cover letter entitled "Renewed Petition under [insert the applicable code section]." This is **not** final agency action within the meaning of 5 U.S.C. § 704.

The above-identified application became abandoned for failure to timely and properly reply to the Notice Regarding Drawings ("Notice"), mailed March 2, 2006. The Notice set a non-extendable two (2) month period for reply. No reply having been received, the application became abandoned on May 8, 2006. A Notice of Abandonment was mailed June 21, 2006.

Petition under 37 CFR 1.181

Applicant files the present petition and asserts that a timely reply to the Notice was filed on March 22, 2006. In support of this assertion, Applicant provides a copy of a the response, which includes a Certificate of Mailing dated March 22, 2006, and executed by Linda D'Elia. Applicant also includes a statement under 37 CFR 1.8(b)(3) from Ms. D'Elia wherein Ms. D'Elia states that on March 22, 2006, [she] deposited the attached Notice Regarding Drawings dated March 2, 2006 with Applicant's Transmittal Form and Fee Transmittal Form under Certificate of Mailing dated March 22, 2006...."

Applicable Law, Rules and MPEP

37 CFR 1.8(b), Certificate of mailing or transmission, .The MPEP 711.03(c)A, Petition To Withdraw Holding of Abandonment Based on Failure To Receive Office Action, explains that

(b) In the event that correspondence is considered timely filed by being mailed or transmitted in accordance with paragraph (a) of this section, but not received in the U.S. Patent and Trademark Office after a reasonable amount of time has elapsed from the time of mailing or transmitting of the correspondence, or after the application is held to be abandoned, or after the proceeding is dismissed, terminated, or decided with prejudice, the correspondence will be considered timely if the party who forwarded such correspondence:
(1) Informs the Office of the previous mailing or transmission of the correspondence promptly after becoming aware that the Office has no evidence of receipt of the correspondence;
(2) Supplies an additional copy of the previously mailed or transmitted correspondence and certificate; and
(3) Includes a statement which attests on a personal knowledge basis or to the satisfaction of the Director to the previous timely mailing or transmission. If the correspondence was sent by facsimile transmission, a copy of the sending unit's report confirming transmission may be used to support this statement.
(c) The Office may require additional evidence to determine if the correspondence was timely filed. (Emphasis supplied).

37 CFR 1.8(b)

Analysis and conclusion

The statement by Ms. D'Elia fails to demonstrate that a timely response to the Notice was filed. The statement attests to the mailing of the Notice; Transmittal Form and Fee Transmittal Form only. And while the statement refers to "the attached Notice", and filed with the statement is a copy of the "Response to Notice regarding Drawings," the statement is at best ambiguous as to what was filed under Certificate of Mailing by Ms. D'Elia on March 22, 2006, and clearly fails to state that the drawing was filed on March 22, 2006..

The petition is dismissed without prejudice. Applicant should file a request for reconsideration of petition which includes the necessary statement.

Further correspondence with respect to this matter should be addressed as follows:

By mail: Director for Patents
PO Box 1450
Alexandria, VA 22313-1450

By FAX: (571) 273-8300
Attn: Office of Petitions

By hand: Customer Service Window
Randolph Building
401 Dulany Street
Alexandria, VA 22314

Telephone inquiries concerning this matter should be directed to the undersigned at (571) 272-3232.

Derek L. Woods
Attorney
Office of Petitions

UNITED STATES PATENT AND TRADEMARK OFFICE

Commissioner for Patents
United States Patent and Trademark Office
P.O. Box 1450
Alexandria, VA 22313-1450
www.uspto.gov

BLAKELY SOKOLOFF TAYLOR & ZAFMAN
1279 OAKMEAD PARKWAY
SUNNYVALE CA 94085-4040

COPY MAILED

JAN 2 2 2008

OFFICE OF PETITIONS

In re Application of	:	
Alessandro Manneschi	:	
Application No.: 10/817387	:	DECISION ON
Filing or 371(c) Date: 04/01/2004	:	PETITION
Attorney Docket Number: 15675P521	:	

This is a decision in response to the Request for Reconsideration of Petition to Revive, filed December 6, 2007. The petition is properly treated under 37 CFR § 1.181.

This Petition is hereby **granted**.

The above-identified application became abandoned for failure to timely and properly reply to the Notice Regarding Drawings ("Notice"), mailed March 2, 2006. The Notice set a non-extendable two (2) month period for reply. No reply having been received, the application became abandoned on May 8, 2006. A Notice of Abandonment was mailed June 21, 2006.

Applicant filed a petition to withdraw the holding of abandonment on October 9, 2007, which was dismissed in Decision mailed November 16, 2007, for failing to meet the requirements of a grantable petition under 37 CFR 1.181.

Applicant files the present renewed petition and includes a statement under 37 CFR 1.8(b)(3) from Ms. D'Elia wherein Ms. D'Elia states that on March 22, 2006, [she] deposited the drawing at issue along with the Reply to the Notice Regarding Drawings dated March 2, 2006 under Certificate of Mailing dated March 22, 200.

The file record does not include the originally submitted papers. Failure to receive correspondence which includes a certificate of mailing or certificate of facsimile transmission is addressed in 37 CFR 1.8(b), reproduced below:

> (b) In the event that correspondence is considered timely filed by being mailed or transmitted in accordance with paragraph (a) of this section, but not received in the U.S. Patent and Trademark Office after a reasonable amount of time has elapsed from the time of mailing or transmitting of the correspondence, or after the application is held to be abandoned, or after the proceeding is dismissed, terminated, or decided with prejudice, the correspondence will be considered timely if the party who forwarded such correspondence:

(1) Informs the Office of the previous mailing or transmission of the correspondence promptly after becoming aware that the Office has no evidence of receipt of the correspondence;
(2) Supplies an additional copy of the previously mailed or transmitted correspondence and certificate; and
(3) Includes a statement which attests on a personal knowledge basis or to the satisfaction of the Director to the previous timely mailing or transmission. If the correspondence was sent by facsimile transmission, a copy of the sending unit's report confirming transmission may be used to support this statement.
(c) The Office may require additional evidence to determine if the correspondence was timely filed. (Emphasis supplied).

37 CFR 1.8(b)

Applicant has complied with the requirements of 37 CFR 1.8(b).

In view of the foregoing, the petition is granted. The holding of abandonment is hereby withdrawn.

The application will be referred to Technology Center Art Unit 2859 for processing of the Reply to the Notice Regarding Drawings, and for continued processing of the application.

Telephone inquiries concerning this matter should be directed to the undersigned at (571) 272-3232.

Derek L. Woods
Attorney
Office of Petitions

UNITED STATES PATENT AND TRADEMARK OFFICE

Commissioner for Patents
United States Patent and Trademark Office
P.O. Box 1450
Alexandria, VA 22313-1450
www.uspto.gov

SCHWEGMAN, LUNDBERG, WOESSNER & KLUTH
1600 TCF TOWER
121 SOUTH EIGHT STREET
MINNEAPOLIS MN 55402

COPY MAILED

JAN 23 2006

OFFICE OF PETITIONS

In re Application of	:	
John Weinel	:	
Application No. 10/817,451	:	ON PETITION
Filed: April 2, 2004	:	
Attorney Docket No. 1948.001US1	:	

This is a decision on the petition, filed January 19, 2006, under 37 CFR 1.313(c)(2) to withdraw the above-identified application from issue after payment of the issue fee.

The petition is **GRANTED**.

The above-identified application is withdrawn from issue for consideration of a submission under 37 CFR 1.114 (request for continued examination). See 37 CFR 1.313(c)(2).

Petitioner is advised that the issue fee paid on January 18, 2006, in the above-identified application cannot be refunded. If, however, the above-identified application is again allowed, petitioner may request that it be applied towards the issue fee required by the new Notice of Allowance.[1]

Telephone inquiries should be directed to the undersigned at (571) 272-3208.

The examiner of Technology Center AU 3617 will consider the request for continued examination under 37 CFR 1.114.

Karen Creasy

Karen Creasy
Petitions Examiner
Office of Petitions
Office of the Deputy Commissioner
for Patent Examination Policy

---

[1] The request to apply the issue fee to the new Notice may be satisfied by completing and returning the new Issue Fee Transmittal Form PTOL-85(b), which includes the following language thereon: "Commissioner for Patents is requested to apply the Issue Fee and Publication Fee (if any) or re-apply any previously paid issue fee to the application identified above." Petitioner is advised that, whether a fee is indicated as being due or not, the Issue Fee Transmittal Form **must** be completed and timely submitted to avoid abandonment. Note the language in bold text on the first page of the Notice of Allowance and Fee(s) Due (PTOL-85).

UNITED STATES PATENT AND TRADEMARK OFFICE

Commissioner for Patents
United States Patent and Trademark Office
P.O. Box 1450
Alexandria, VA 22313-1450
www.uspto.gov

BURNS DOANE SWECKER & MATHIS L L P
POST OFFICE BOX 1404
ALEXANDRIA VA 22313-1404

COPY MAILED

JUN 13 2005

OFFICE OF PETITIONS

In re Application of
David Naccache et al.
Application No. 10/817,453
Filed: April 5, 2004
Atty Docket No. 032326-050

ON PETITION

This is in response to the petition under 37 CFR 1.47(a) filed January 24, 2005.

The petition is **DISMISSED**.

Upon application, petitioners submitted the oath or declaration from parent application no. 09/377,666, filed on August 19, 1999, of which the instant application is a continuation, but was not executed by joint inventor Francoise Levy-Dit-Vehel. On June 22, 2004, the Office mailed a Notice to File Missing Parts of Nonprovisional Application, which set forth a two (2) month period to submit the required filing fee, executed oath or declaration and surcharge for their late filing. In response, on January 24, 2005, the instant petition, fees, five month extension of time request and declaration submitted by Phillip Brun, an employee of the assignee and on behalf of the assignee.

Mr. Brun outlines the events that transpired when an attempt to present the application in the parent case to Francoise Levy-Dit-Vehel resulted in a refusal by the non-signing inventor to cooperate with the filing of that application.

A grantable petition under 37 CFR 1.47(a) requires: (1) proof that the non-signing inventor cannot be reached or refuses to sign the oath or declaration after having been presented with the application papers (specification, claims and drawings); (2) an acceptable oath or declaration in compliance with 35 U.S.C. §§ 115 and 116; (3) the petition fee; and (4) a statement of the last known address of the non-signing inventor. This petition lacks compliance with items (1), (2) and (4).

Pursuant to 37 CFR 1.63:

> (d)(1) A newly executed oath or declaration is not required under § 1.51(b)(2) and § 1.53(f) in a continuation or divisional application provided that:
>
> (i) The prior nonprovisional application contained an oath or declaration as prescribed by paragraphs (a) through (c) of this section;
>
> (ii) The continuation or divisional application was filed by all or by

fewer than all of the inventors named in the prior application;

(iii) The specification and drawings filed in the continuation or divisional application contain no matter that would have been new matter in the prior application; and

(iv) A copy of the executed oath or declaration submitted under this paragraph for a continuation or divisional application must be accompanied by a statement requesting the deletion of the name or names of the person or persons who are not inventors in the continuation or divisional application.

Unfortunately, status under 37 CFR 1.47(a) cannot be granted using an unexecuted oath or declaration from a prior filed application unless and of course it can be established that status under 37 CFR 1.47(a) was accorded in the prior filed application.

Petitioners have not submitted a fully executed oath or declaration from parent application no. 09/377,666, filed August 19, 1999, or a copy of a decision which accorded 37 CFR § 1.47(a) status to the prior application

In view thereof, petitioner's reply, although in response to the Notice mailed June 22, 2004, is incomplete and as such, the application became abandoned as of the expiration of the extendable time period.

Under the circumstances of this application, petitioner must file a petition to revive under 37 CFR 1.137 and a proper response to the Notice to File Missing Parts within TWO (2) months from the mailing date of this decision, correcting the above-noted deficiencies.

Further correspondence with respect to this matter should be addressed as follows:

By mail: Mail Stop Petition
Commissioner for Patents
P.O. Box 1450
Alexandria, VA 22313-1450

By FAX: (703) 872-9306
Office of Petitions

Telephone inquiries concerning this matter may be directed to the undersigned Petitions Attorney at (517) 272-3212.

Patricia Faison-Ball

Patricia Faison-Ball
Senior Petitions Attorney
Office of Petitions

UNITED STATES PATENT AND TRADEMARK OFFICE

COMMISSIONER FOR PATENTS
UNITED STATES PATENT AND TRADEMARK OFFICE
P.O. BOX 1450
ALEXANDRIA, VA 22313-1450
WWW.USPTO.GOV

Paper No. None

SANFORD E. WARREN, JR.
P.O. BOX 50784
DALLAS TX 75201

COPY MAILED
JUL 17 2006
OFFICE OF PETITIONS

In re Application of :
Charles J. Kingdon et al. :
Application No. 10/817,463 : DECISION ON PETITION
Filed: April 2, 2004 : UNDER 37 C.F.R. §1.181
Attorney Docket No.: 41854- :
P001US :
Title: CONVEYOR TYPE OVEN

This is a decision on the petition filed on May 3, 2006, pursuant to 37 C.F.R. §1.181, requesting that the holding of abandonment in the above-identified application be withdrawn.

BACKGROUND

The above-identified application became abandoned for failure to reply in a timely manner to the non-final Office action, mailed October 18, 2005, which set a shortened statutory period for reply of three (3) months. No response was received, and no extensions of time under the provisions of 37 C.F.R. §1.136(a) were requested. Accordingly, the above-identified application became abandoned on January 19, 2006.

RELEVANT PORTION OF THE C.F.R.

37 C.F.R. §1.8(b) sets forth, *in toto*:

> (b) In the event that correspondence is considered timely filed by being mailed or transmitted in accordance with paragraph (a) of this section, but not received in the U.S. Patent and Trademark Office after a reasonable amount of time has elapsed from the time of mailing or transmitting of the correspondence, or after the application is held to be abandoned, or after the proceeding is dismissed, terminated, or decided with prejudice,

the correspondence will be considered timely if the party who forwarded such correspondence:

(1) Informs the Office of the previous mailing or transmission of the correspondence promptly after becoming aware that the Office has no evidence of receipt of the correspondence;

(2) Supplies an additional copy of the previously mailed or transmitted correspondence and certificate; and

(3) Includes a statement which attests on a personal knowledge basis or to the satisfaction of the Director to the previous timely mailing or transmission. If the correspondence was sent by facsimile transmission, a copy of the sending unit's report confirming transmission may be used to support this statement.

ANALYSIS

With the present petition, Petitioner has asserted that a response to this communication was submitted on November 17, 2005. Petitioner has submitted a copy of this submission, and it is noted that it contains a certificate of facsimile transmission dated November 17, 2005.

Certificate of facsimile transmission practice provides a mechanism by which Applicants may evince that a paper was timely submitted to the Office, in the event that the correspondence is not received.

Petitioner's submission has been reviewed: with the present petition, Petitioner has informed the Office of the previous facsimile transmission, provided an additional copy of the previously submitted correspondence, and has included a statement which attests on a personal knowledge basis or to the satisfaction of the Director to the previous timely transmission.

Petitioner has requested that the holding of abandonment in the above-identified application be withdrawn. It is clear that a response was timely submitted. Considering the facts and circumstances of the delay at issue, as set forth on petition, it is concluded that petitioner has met his burden of establishing that a submission was timely submitted.

Accordingly, the petition under 37 C.F.R. §1.181(a) is **GRANTED**. The holding of abandonment is **WITHDRAWN**.

The Technology Center will be notified of this decision. The Technology Center's support staff will notify the Examiner of this decision, so that the amendment which was received with the present petition can be processed.

Telephone inquiries regarding *this decision* should be directed to the undersigned at (571) 272-3225. All other inquiries concerning examination procedures or status of the application should be directed to the Technology Center.

It is noted that the address listed on the petition differs from the address of record. The application file does not indicate a change of correspondence address has been filed in this case, although the address given on the petition differs from the address of record. If petitioner desires to receive future correspondence regarding this application, the change of correspondence address must be submitted. A courtesy copy of this decision will be mailed to petitioner. However, all future correspondence will be directed to the address of record until such time as appropriate instructions are received to the contrary. Petitioner will not receive future correspondence related to this application unless Change of Correspondence Address, Patent Form (PTO/SB/122) is submitted for the above-identified application. For petitioner's convenience, a blank Change of Correspondence Address, Patent Form (PTO/SB/122), may be found at http://www.uspto.gov/web/forms/sb0122.pdf.

Paul Shanoski
Senior Attorney
Office of Petitions
United States Patent and Trademark Office

cc: SANFORD E. WARREN, JR.
Akin Gump Strauss Hauer & Feld LLP
P.O. BOX 688
DALLAS TX 75313-0688

UNITED STATES PATENT AND TRADEMARK OFFICE

Commissioner for Patents
United States Patent and Trademark Office
P.O. Box 1450
Alexandria, VA 22313-1450
www.uspto.gov

MAIL

FEB 04 2008

DIRECTOR'S OFFICE
TECHNOLOGY CENTER 2600

LEE & HAYES PLLC
421 W. RIVERSIDE AVENUE D SUITE 500
SPOKANE, WA 99201

In re Application of
Jian Sun *et al*
Serial No.: 10/817,471
Filed: April 1, 2004
For: **GENERIC IMAGE HALLUCINATION**

DECISION ON PETITION
ACCEPTANCE OF COLOR DRAWINGS

This is a decision on the petition under 37 CFR §1.184(a)(2) and (b)(2), filed November 15, 2007 requesting acceptance color drawings.

The petition requests that the color drawings identified in Figures 1 - 6, 14, 15 and 18 be accepted in lieu of black and white drawings.

A grantable petition under 37 C.F.R. §1.84(a)(2) must be accompanied by a fee set forth under 37 C.F.R. § 1.17(h), 3 (three) sets of the color drawings in question, and the specification must contain, or be amended to contain, the following language as the first paragraph in that portion of the specification relating to the brief description of the drawings:

"The file of this patent contains at least one drawing executed in color. Copies of this patent with color drawing(s) will be provided by the Patent and Trademark Office upon request and payment of the necessary fee."

The petition is GRANTED.

/Krista Zele/

Krista Zele
Special Program Examiner
Technology Center 2600
Communications

UNITED STATES PATENT AND TRADEMARK OFFICE

Commissioner for Patents
United States Patent and Trademark Office
P.O. Box 1450
Alexandria, VA 22313-1450
www.uspto.gov

AKIN GUMP STRAUSS HAUER & FELD L.L.P.
ONE COMMERCE SQUARE
2005 MARKET STREET, SUITE 2200
PHILADELPHIA PA 19103

COPY MAILED
JUL 14 2006
OFFICE OF PETITIONS

In re Application of	:	
Yu et al.	:	
Application No. 10/817,479	:	ON PETITION
Filed: April 2, 2004	:	
Attorney Docket No. 8976-227U1	:	

This is a decision on the petition under 37 CFR 1.102(c)(1), filed June 22, 2006, to make the above-identified application special based on applicant's age as set forth in M.P.E.P. § 708.02, Section IV.

The petition is **GRANTED**.

A grantable petition to make an application special under 37 CFR 1.102(c)(1) and MPEP § 708.02, Section IV: Applicant's Age must be accompanied by evidence showing that at least one of the applicants is 65 years of age, or more, such as a birth certificate or a statement by applicant. No fee is required.

The instant petition includes statements from both of the applicants, Ruey J. Yu and Eugene J. Van Scott. Accordingly, the above-identified application has been accorded "special" status.

Telephone inquiries concerning this decision should be directed to the undersigned at 571-272-3206. All other inquiries concerning either the examination or status of the application should be directed to the Technology Center.

This matter is being referred to the Technology Center Art Unit 1617 for action on the merits commensurate with this decision.

Liana Chase
Petitions Examiner
Office of Petitions

UNITED STATES PATENT AND TRADEMARK OFFICE

Commissioner for Patents
United States Patent and Trademark Office
P.O. Box 1450
Alexandria, VA 22313-1450
www.uspto.gov

FRISHAUF, HOLTZ, GOODMAN & CHICK, PC
220 5TH AVENUE FLOOR 16
NEW YORK NY 10001-7708

COPY MAILED

OCT 1 8 2005

OFFICE OF PETITIONS

In re Application of	:	
Shigeaki Yamanaka et al	:	
Application No. 10/817,526	:	ON PETITION
Filed: April 1, 2004	:	
Attorney Docket No. 04202/LH	:	

This is a decision on the petition, filed October 14, 2005, under 37 CFR 1.313(c)(2) to withdraw the above-identified application from issue after payment of the issue fee.

The petition is **GRANTED**.

The above-identified application is withdrawn from issue for consideration of a submission under 37 CFR 1.114 (request for continued examination). See 37 CFR 1.313(c)(2).

Petitioner is advised that the issue fee paid on September 21, 2005 in the above-identified application cannot be refunded. If, however, the above-identified application is again allowed, petitioner may request that it be applied towards the issue fee required by the new Notice of Allowance.[1]

Telephone inquiries should be directed to the undersigned at (571) 272-3208.

The examiner of Technology Center AU 3742 will consider the request for continued examination under 37 CFR 1.114.

Karen Creasy
Petitions Examiner
Office of Petitions
Office of the Deputy Commissioner
for Patent Examination Policy

---

[1] The request to apply the issue fee to the new Notice may be satisfied by completing and returning the new Issue Fee Transmittal Form PTOL-85(b), which includes the following language thereon: "Commissioner for Patents is requested to apply the Issue Fee and Publication Fee (if any) or re-apply any previously paid issue fee to the application identified above." Petitioner is advised that, whether a fee is indicated as being due or not, the Issue Fee Transmittal Form **must** be completed and timely submitted to avoid abandonment. Note the language in bold text on the first page of the Notice of Allowance and Fee(s) Due (PTOL-85).

UNITED STATES PATENT AND TRADEMARK OFFICE

Commissioner for Patents
United States Patent and Trademark Office
P.O. Box 1450
Alexandria, VA 22313-1450
www.uspto.gov

BRACEWELL & GIULIANI LLP
P.O. BOX 61389
HOUSTON TX 77208-1389

COPY MAILED

DEC 13 2007

OFFICE OF PETITIONS

In re Application of	:	
Jones, Michael I.	:	
Application No. 10/817,538	:	DECISION ON PETITION
Filed: April 2, 2004	:	
Attorney Docket No. TA-00644	:	

This is a decision on the petition under the unintentional provisions of 37 CFR 1.137(b), filed November 13, 2007, to revive the above-identified application.

The petition is **GRANTED**.

The petition satisfies the requirements of 37 CFR 1.137(b) in that petitioner has supplied (1) the reply in the form of the Issue Fee Transmittal with payment of the issue and publication fees, (2) the petition fee, and (3) a proper statement of unintentional delay.

Telephone inquiries concerning this decision should be directed to the undersigned at (571) 272-3206.

This matter is being referred to the Publishing Division for processing into a patent.

Liana Walsh
Petitions Examiner
Office of Petitions

UNITED STATES PATENT AND TRADEMARK OFFICE

Commissioner for Patents
United States Patent and Trademark Office
P.O. Box 1450
Alexandria, VA 22313-1450
www.uspto.gov

BRACEWELL & GIULIANI LLP
P.O. BOX 61389
HOUSTON TX 77208-1389

COPY MAILED

JAN 10 2008

OFFICE OF PETITIONS

In re Application of	:	
Jones, Michael I.	:	
Application No. 10/817,538	:	ON PETITION
Filed: April 2, 2004	:	
Attorney Docket No. TA-00644	:	

CORRECTED DECISION

This is a decision on the petition under 37 C.F.R. § 1.137(b), filed November 13, 2007, to revive the above-identified application. The petition decision previously mailed on December 13, 2007 is hereby vacated.

The petition is **DISMISSED**.

Any request for reconsideration must be submitted within TWO (2) MONTHS from the mail date of this decision. No further petition fee is required for the request. Extensions of time under 37 CFR 1.136(a) are permitted. The reconsideration request should include a cover letter entitled "Renewed Petition under 37 CFR 1.137(b)." This is **not** a final agency action within the meaning of 5 U.S.C. § 704.

A grantable petition under 37 CFR 1.137(b) must be accompanied by:
(1) the required reply,[1]
(2) the petition fee,
(3) a statement that the entire delay in filing the required reply from the due date for the reply until the filing of a grantable petition pursuant to 37 CFR 1.137(b) was unintentional, and
(4) a terminal disclaimer and fee if the application was filed on or before June 8, 1995 or if the application is a design application.

Where there is a question as to whether either the abandonment or the delay in filing a petition under 37 CFR 1.137 was unintentional, the Commissioner may require additional information.[2]

The instant petition lacks item(s) (1). Although petitioner did submit the issue and publication fees with the instant petition on November 13, 2007, petitioner failed to respond to the Notice of

---

[1] In a nonprovisional application abandoned for failure to prosecute, the required reply may be met by the filing of a continuing application. In an application or patent, abandoned or lapsed for failure to pay the issue fee or any portion thereof, the required reply must be the payment of the issue fee or any outstanding balance thereof.

[2] See MPEP 711.03(c)(III)(C) and (D).

Drawing Inconsistency with Specification mailed on May 4, 2007. A copy of the Notice is enclosed.

Accordingly, corrected drawings are required for revival in the instant application.

Further correspondence with respect to this matter should be addressed as follows:

By mail: Mail Stop PETITIONS
Commissioner for Patents
Post Office Box 1450
Alexandria, VA 22313-1450

By hand: Customer Window located at:

U.S. Patent and Trademark Office
Customer Service Window Randolph Building
401 Dulany Street
Alexandria, VA 22314

By fax: (571) 273-8300
ATTN: Office of Petitions

Any questions concerning this matter may be directed to the undersigned at (571) 272-3206.

Liana Walsh
Petitions Examiner
Office of Petitions

Enclosure: Notice of Drawing Inconsistency with Specification

10/817538(1631)

UNITED STATES PATENT AND TRADEMARK OFFICE

UNDER SECRETARY OF COMMERCE FOR INTELLECTUAL PROPERTY AND
DIRECTOR OF THE UNITED STATES PATENT AND TRADEMARK OFFICE

NOTICE OF DRAWING INCONSISTENCY WITH SPECIFICATION

The drawings filed 4/2/2004 have been received. However, an inconsistency exists between the drawings and the Brief Description of the Drawings in the specification.

Figures 8a, 8b are listed in the Brief Description of the Drawings in the specification but not contained in the Drawings.

Figure ____ is contained in the Drawings but not listed in the Brief Description of the Drawings in the specification.

Applicant is required to correct the above-noted inconsistency within a time period of **ONE MONTH or THIRTY (30) DAYS, whichever is longer,** from the mailing date of this Notice, or within the time remaining in the time period set forth in the Notice of Allowability (Form PTOL-37) to file corrected drawings, whichever is longer. **NO EXTENSION OF THIS TIME PERIOD MAY BE GRANTED UNDER EITHER 37 CFR 1.136 (a) OR (b)**

Failure to correct the above noted inconsistency will result in **abandonment** of the application.

The file will be held in the Publishing Division to await the correction of the inconsistency.

Return Corrected Drawings/Specification to:
Mail Stop Issue Fee
Commissioner for Patents
P.O. Box 1450

Alexandria, VA 22313-1450

Office of Patent Publication/Publishing Division
Customer Service: 571-272-4200
1-888-786-0101

FORM PTO-1631 (REV. 10-03)

UNITED STATES PATENT AND TRADEMARK OFFICE

Commissioner for Patents
United States Patent and Trademark Office
P.O. Box 1450
Alexandria, VA 22313-1450
www.uspto.gov

BRACEWELL & GIULIANI LLP
P.O. BOX 61389
HOUSTON TX 77208-1389

COPY MAILED

MAR 0 3 2008

OFFICE OF PETITIONS

In re Application of	:	
Jones, Michael I.	:	
Application No. 10/817,538	:	DECISION ON PETITION
Filed: April 2, 2004	:	
Attorney Docket No. TA-00644	:	

This is a decision on the renewed petition under the unintentional provisions of 37 CFR 1.137(b), filed January 25, 2008, to revive the above-identified application.

The petition is **GRANTED**.

Petitioner has now submitted a Response to the Notice of Drawing Inconsistency with Specification.

Telephone inquiries concerning this decision should be directed to the undersigned at (571) 272-3206.

This matter is being referred to the Office of Data Management for further processing into a patent.

Liana Walsh
Petitions Examiner
Office of Petitions

SPE RESPONSE FOR CERTIFICATE OF CORRECTION

Paper No.: _____

DATE : 3/20/07

TO SPE OF : ART UNIT 2814

SUBJECT : Request for Certificate of Correction for Appl. No.: 10/817548 Patent No.: 7071058B2

Please respond to this request for a certificate of correction within 7 days.

Please review the requested changes/corrections as shown in the **COCIN** document(s) in the IFW application image. No new matter should be introduced, nor should the scope or meaning of the claims be changed.

Please complete the response (see below) and forward the completed response to scanning using document code **COCX**.

Virginia Tolbert
Certificates of Correction Branch

703-308-9390 ext. 113

Thank You For Your Assistance

The request for issuing the above-identified correction(s) is hereby:
Note your decision on the appropriate box.

- ☒ **Approved** — **All** changes apply.
- ☐ **Approved in Part** — Specify below which changes **do not** apply.
- ☐ **Denied** — State the reasons for denial below.

Comments: _____

SPE

2814
Art Unit

UNITED STATES PATENT AND TRADEMARK OFFICE

Commissioner for Patents
United States Patent and Trademark Office
P.O. Box 1450
Alexandria, VA 22313-1450
www.uspto.gov

COPY MAILED

FEB 0 2 2005

OFFICE OF PETITIONS

C. Robert Rhodes
Womble Carlyle Sandridge & Rice, PLLC
P.O. Box 7037
Atlanta, GA 30357-4512

In re Application of
Miller, Jarrett, Marraffa, and Vutetakis
Application No.: 10/817,559
Filed: April 2, 2004
Attorney Docket No: D1243 1010.1
For: BATTERY RACK AND SYSTEM

: DECISION ACCORDING
: RULE 47(a) STATUS

This is in response to the petition under 37 CFR 1.47(a), filed December 22, 2004.

The petition is **GRANTED**.

The above-identified application and papers have been reviewed and found in compliance with 37 CFR 1.47(a). This application is hereby accorded Rule 1.47(a) status.

The above-cited application was filed on April 2, 2004, without a properly executed declaration. On June 22, 2004, the Office of Initial Patent Examination mailed a Notice to File Missing Parts of Nonprovisional Application requiring a declaration signed by all named inventors and a surcharge of $130.00 for the late filing of the declaration. On December 22, 2004, the instant petition was filed along with a request for an extension of time within the fourth month.

Petitioner has shown that inventor Marraffa expressly refused to join the prosecution of the application. The above-identified application and papers have been reviewed and found in compliance with 37 CFR 1.47(a). This application is hereby accorded Rule 1.47(a) status.

As provided in Rule 1.47(c), this Office will forward notice of this application's filing to the non-signing inventor at the addresses given in the petition. Notice of the filing of this application will also be published in the Official Gazette.

This application will be forwarded to the Office of Initial Patent Examination for further processing.

Telephone inquiries should be directed to the undersigned at (571) 272-3222.

Kenya A. McLaughlin
Petitions Attorney
Office of Petitions

UNITED STATES PATENT AND TRADEMARK OFFICE

Commissioner for Patents
United States Patent and Trademark Office
P.O. Box 1450
Alexandria, VA 22313-1450
www.uspto.gov

Andrew Marraffa
513 Preston Court
Exton, PA 19341

COPY MAILED

FEB 0 2 2005

OFFICE OF PETITIONS

In re Application of
Miller, Jarrett, Marraffa, and Vutetakis
Application No. 10/817,559
Filed: April 2, 2004
Attorney Docket No.D1243 1010.1
For: BATTERY RACK AND SYSTEM

: LETTER

Dear Mr. Marraffaa:

You are named as a joint inventor in the above-identified United States patent application filed under the provisions of 35 U.S.C. 116 (United States Code) and 37 CFR 1.47(a), Rules of Practice in Patent Cases. Should a patent be granted on the application you will be designated therein as a joint inventor.

As a joint inventor, you are entitled to inspect any paper in the file wrapper of the application, order copies of all or any part thereof (at a prepaid cost per 37 CFR 1.19) or make your position of record in the application. Alternatively, you may arrange to do any of the preceding through a registered patent attorney or agent presenting written authorization from you. If you care to join the application, counsel of record (see below) would presumably assist you. Joining in the application would entail the filing of an appropriate oath or declaration by you pursuant to 37 CFR 1.63. It should be further noted that any assignee of record of the entire interest in the application may request that the inventor(s) be excluded from access to the application. If the request is granted, you will be informed of that fact and will only be permitted to inspect the application on sufficient showing of why such inspection is necessary to conserve your rights. See *MPEP* 106, citing, *In re The Kellog Switchboard & Supply Company*, 1906 C.D. 274 (Comm'r Pat. 1906).

Telephone inquiries regarding this communication should be directed to Petitions Attorney Kenya A. McLaughlin at (571) 272-3222. Requests for information regarding your application should be directed to the File Information Unit at (703) 308-2733. Information regarding how to pay for and order a copy of the application, or a specific paper in the application, should be directed to Certification Division at (703) 308-9726 or 1-800-972-6382 (outside the Washington D.C. area).

Kenya A. McLaughlin

Kenya A. McLaughlin
Petitions Attorney
Office of Petitions

C. Robert Rhodes
Womble Carlyle Sandridge & Rice, PLLC
P.O. Box 7037
Atlanta, GA 30357-4512

UNITED STATES PATENT AND TRADEMARK OFFICE

COMMISSIONER FOR PATENTS
UNITED STATES PATENT AND TRADEMARK OFFICE
P.O. BOX 1450
ALEXANDRIA, VA 22313-1450
www.uspto.gov

MAIL

DEC 5 2005

DIRECTOR OFFICE
TECHNOLOGY CENTER 2600

Fellers, Snider, Blankenship,
Bailey & Tippens, P.C.
Suite 1700
100 North Broadway
Oklahoma City OK 73102-8820

In re Application of
David Peter Decenzo, et al.
Application No. 10/817,565
Filed:April 2, 2004
For: **MULTIPATH REDUNDANT STORAGE SYSTEM ARCHITECTURE AND METHOD**

DECISION ON PETITION TO MAKE SPECIAL

This is a decision on the petition filed November 16, 2005 under Manual of Patent Examination Procedure §708.02, VIII requesting accelerated examination.

The petition under Manual of Patent Examination Procedure §708.02, VIII, must:

(1) be filed prior to receiving any examination by the examiner,
(2) be accompanied by the required fee- $130,
(3) the claims should be directed to a single invention (if it is determined that the claims pertain to more than one invention, then applicant will have to make an election without traverse or forfeit accelerated examination status),
(4) state that a pre-examination search was made, and fully discuss the search method employed, such as classes and subclasses searched, publications, Chemical abstracts, patents, etc. A search made by a foreign patent office satisfies this requirement,
(5) be accompanied by a copy of each of the references most closely related to the subject matter encompassed by the claims if said references are not already of record,
(6) fully discuss the references, pointing out with the particularity required by 37 C.F.R. §1.111 (b) and (c), how the claimed subject matter is patentable over the references.

The petitioner meets all the above-listed requirements. Accordingly, the petition is **GRANTED**.

The application will retain its special status throughout its entire prosecution, including any appeal to the Board of Patent Appeals and Interferences, subject only to diligent prosecution by the applicant. The application file is being forwarded to the examiner for appropriate action in due course.

Krista Žele
Special Program Examiner
Technology Center 2600
Communications

UNITED STATES PATENT AND TRADEMARK OFFICE

Commissioner for Patents
United States Patent and Trademark Office
P.O. Box 1450
Alexandria, VA 22313-1450
www.uspto.gov

TEXAS INSTRUMENTS INCORPORATED
PO BOX 655474, M/S 3999
DALLAS TX 75265

COPY MAILED

FEB 20 2007

OFFICE OF PETITIONS

In re Application of Kugelstadt :
Application No. 10/817,578 :
Filing Date: April 2, 2004 :
Attorney Docket No. TI-35652 :

Decision on Petition

This is a decision on the petition under 37 CFR 1.137(b), filed September 27, 2006, to revive the above-identified application.

The petition is **granted**.

The above-identified application became abandoned for failure to submit the issue fee and publication fee in a timely manner in reply to the Notice of Allowance mailed June 2, 2006, which set a statutory period for reply of three (3) months. Accordingly, the above-identified application became abandoned on September 3, 2006

The instant petition requests revival of the application.

Petitioner has met the requirements to revive the above-identified application pursuant to 37 CFR 1.137(b). Therefore, the petition is granted and the application is revived.

The Office of Publications will be informed of the instant decision and the application will be issued as a patent in due course.

Telephone inquiries regarding this communication should be directed to Petitions Attorney Steven Brantley at (571) 272-3203.

Charles Steven Brantley
Senior Petitions Attorney
Office of Petitions

UNITED STATES PATENT AND TRADEMARK OFFICE

COMMISSIONER FOR PATENTS
UNITED STATES PATENT AND TRADEMARK OFFICE
P.O. BOX 1450
ALEXANDRIA, VA 22313-1450
www.uspto.gov
DIW Oct-06

J.C. PATENTS, INC.
SUITE 250
4 VENTURE
IRVINE CA 92618

COPY MAILED

OCT 10 2006

OFFICE OF PETITIONS

In re Application of	:	
Chi et al.	:	DECISION ON PETITION TO
Application No. 10/817,580	:	WITHDRAW HOLDING OF
Filed: 2 April, 2004	:	ABANDONMENT
Atty Docket No. JCLA12583	:	

This is a decision on the petition on the petition to withdraw the holding of abandonment, filed on 18 July, 2006.

The petition is **GRANTED to the extent indicated**.

Petitioners request that the Notice of Allowance and Fee Due mailed on 10 March, 2006, be remailed, and that the holding of abandonment be withdrawn, as the Notice was returned to the Office as undeliverable on 31 March, 2006.

A review of the record reveals that the Notice has been remailed on 11 July, 2006. As such, the period for reply runs from the date of remailing of the Office action. The application therefore did not become abandoned for failure to reply to the Notice mailed on 10 March, 2006.

The petition is granted to the extent that the Notice of Allowance and Fee(s) Due has been remailed.

The application will be referred to the Publishing Division to await petitioners' response to the Notice mailed on 11 July, 2006.

Telephone inquiries concerning this matter may be directed to the undersigned at (571)272-3231.

D Wood

Douglas I. Wood
Senior Petitions Attorney
Office of Petitions

UNITED STATES PATENT AND TRADEMARK OFFICE

Commissioner for Patents
United States Patent and Trademark Office
P.O. Box 1450
Alexandria, VA 22313-1450
www.uspto.gov
DIW May-08

J.C. PATENTS, INC.
SUITE 250
4 VENTURE
IRVINE CA 92618

COPY MAILED

MAY 15 2008

OFFICE OF PETITIONS

In re Application of Chi et al. Application Number: 10/817580 Filing Date: 04/02/2004 Attorney Docket Number: JCLA12583	DECISION ON PETITION TO WITHDRAW HOLDING OF ABANDONMENT

This is a decision on the petition filed on February 15, 2007, to withdraw the holding of abandonment in the above-identified application.

The application was held abandoned for failure to timely submit the issue and publication fees in response to the Notice of Allowance and Fee(s) Due mailed on March 10, 2006. On March 31, 2006, the Notice of Allowance was returned to the USPTO as undeliverable. On July 11, 2006, the Notice was remailed, however no new time period was set for reply.

Petitioners assert, in essence, that the Notice should be remailed with a new time period specified for reply.

Upon review, petitioners' contention is correct. As the correspondence remailed on July 11, 2006, did not set a new time period for reply, the period set for reply remained as set forth in the Notice of Allowance and Fee(s) Due mailed on March 10, 2006, which had been returned as undeliverable. As such, a proper time period for reply was not provided with the remailing on July 11, 2006.

Accordingly, there was no abandonment in fact. The Notice of Abandonment is hereby vacated and the holding of abandonment withdrawn.

The petition is **GRANTED.**

The application file is being referred to the Technology Center Art Unit 2841 for remailing of the Notice mailed on March 10,

2006. The period for reply will be reset from the mailing date thereof.

Telephone inquiries concerning this matter may be directed to the undersigned at (571)272-3231.

DWood

Douglas I. Wood
Senior Petitions Attorney
Office of Petitions

UNITED STATES PATENT AND TRADEMARK OFFICE

Commissioner for Patents
United States Patent and Trademark Office
P.O. Box 1450
Alexandria, VA 22313-1450
www.uspto.gov

Paper No.

LOUIS J. WILLE
BRISTOL-MYERS SQUIBB COMPANY
PATENT DEPARTMENT
P O BOX 4000
PRINCETON NJ 08543-4000

COPY MAILED
OCT 29 2008
OFFICE OF PETITIONS

In re Patent No. 7,344,860	:	
Franco et al.	:	
Issue Date: March 18, 2008	:	DECISION ON APPLICATION
Application No. 10/817,607	:	FOR
Filed: April 2, 2004	:	PATENT TERM ADJUSTMENT
Attorney Docket No. D0272 NP	:	

This is in response to the "PETITION TO CORRECT PATENT TERM ADJUSTMENT PERIOD IN GRANTED PATENT 7,344,860," filed March 13, 2008, requesting reconsideration of the initial determination of patent term adjustment under 35 U.S.C. 154(b) of 491 days.

The application for patent term adjustment under § 1.705(b) is **DISMISSED AS UNTIMELY FILED**.

Patentee is given **TWO (2) MONTHS** to respond to this decision. No extensions of time will be granted under § 1.136(a).

35 U.S.C. 154(b) provides for patent term adjustment for examination delay. Pursuant to 35 U.S.C. 154(b)(3)(B) and implementing regulation 37 C.F.R. § 1.705, an applicant shall receive an initial determination of patent term adjustment with the mailing of the Notice of Allowance and shall be given one opportunity to request reconsideration of that determination by way of filing of an application for patent term adjustment prior to the payment of the issue fee.

On June 28, 2007, the Office mailed a Determination of Patent Term Adjustment under 35 U.S.C. 154(b) in the above-identified application. The Notice stated that the patent term adjustment to date is 433 days. This determination was based in part on the period of adjustment of 502 days associated with the Office's mailing of a first Office action on October 17, 2006,

reduced by 13 days of applicant delay for filing an Information Disclosure Statement (IDS) on November 29, 2009, and by 56 days for filing an IDS on April 12, 2007. PALM records indicate that the issue fee payment was received in the Office on September 20, 2007. No filing of an application for patent term adjustment preceded the payment of the issue fee. The period for filing an application for patent term adjustment requesting reconsideration of the initial determination of patent term adjustment at the time of mailing of the notice of allowance ended September 20, 2007. Accordingly, it is appropriate to dismiss this petition as untimely filed under 1.705(b).

Consideration under 1.705(d) is not appropriate. As stated in MPEP 2730, 1.703(d) provides that:

> If there is a revision to the patent term adjustment indicated in the notice of allowance, the patent will indicate the revised patent term adjustment. If the patent indicates or should have indicated a revised patent term adjustment, any request for reconsideration of the patent term adjustment indicated in the patent must be filed within two months of the date the patent issued and must comply with the requirements of paragraphs (b)(1) and (b)(2) of this section. Any request for reconsideration under this section that raises issues that were raised, or could have been raised, in an application for patent term adjustment under paragraph (b) of this section shall be dismissed as untimely as to those issues.

The issues raised should have been timely raised on application for patent term adjustment under § 1.705(b).

Submission of the $200.00 fee set forth in 37 CFR 1.18(e) is acknowledged. No additional fees are required.

Telephone inquiries specific to this matter should be directed to Senior Petitions Attorney Douglas I. Wood at (571) 272-3231.

Nancy Johnson

Nancy Johnson
Senior Petitions Attorney
Office of Petitions

UNITED STATES PATENT AND TRADEMARK OFFICE

Commissioner for Patents
United States Patent and Trademark Office
P.O. Box 1450
Alexandria, VA 22313-1450
www.uspto.gov

Paper No.

LOUIS J. WILLE
BRISTOL-MYERS SQUIBB COMPANY
PATENT DEPARTMENT
P O BOX 4000
PRINCETON NJ 08543-4000

COPY MAILED

MAY 13 2009

OFFICE OF PETITIONS

In re Patent No. 7,344,860	:	
Franco et al.	:	DECISION ON REQUEST FOR
Issue Date: March 18, 2008	:	RECONSIDERATION OF
Application No. 10/817,607	:	PATENT TERM ADJUSTMENT
Filed: April 2, 2004	:	
Attorney Docket No. D0272 NP	:	

This is in response to the "SUPPLEMENTAL PETITION TO CORRECT PATENT TERM ADJUSTMENT PERIOD IN GRANTED PATENT 7,344,860 under 1.705(D)," filed November 3, 2008, requesting reconsideration of the determination of patent term adjustment under 35 U.S.C. 154(b). Patentee requests that the patent term adjustment be increased from 491 to 840 days.

The request for reconsideration of patent term adjustment under § 1.705(d) is **DISMISSED AS UNTIMELY FILED**.

Patentee is given **TWO (2) MONTHS** to respond to this decision. No extensions of time will be granted under § 1.136(a).

On November 3, 2008, the subject application under 37 CFR 1.705(d) was filed. Patentee argues that it is entitled to additional patent term adjustment for the period of delay in issuance of the patent in excess of three years (over three year delay) in view of the recent decision in Wyeth v. Dudas, No. 07-1492 (D.D.C. Sept. 30, 2008).

The application is untimely. As stated in MPEP 2730, 1.705(d) provides that:

> If there is a revision to the patent term adjustment indicated in the notice of allowance, the patent will indicate the revised patent term adjustment. *If the patent indicates or should have indicated a revised patent term adjustment, any request for reconsideration of the patent term adjustment indicated in the patent must be filed within two months of the date the patent issued and must comply with the requirements of paragraphs (b)(1) and (b)(2) of this section.* Any request for reconsideration under this section that raises issues that were raised, or could have been raised, in an application for patent term adjustment under paragraph (b) of this section shall be dismissed as untimely as to those issues.
>
> (emphasis added)

As the patent issued March 18, 2008, any application for patent term adjustment under 37 CFR 1.705(d) was required to have been filed on or before May 18, 2008, which is two (2) months from the date the patent issued. The instant request is not timely as it was not, as stated by patentee, filed within two months of the issue date of the subject patent.

Patentees filing of this as a supplemental petition to correct patent term adjustment (PTA) does not change this conclusion. Patentees filed an initial application for patent term adjustment on March 13, 2008. This was within 2 months of the date of the issuance of the patent. However, the application for patent term adjustment filed on March 13, 2008, was only directed to issues that could have been raised before the payment of the issue fee on application for patent term adjustment under 37 CFR 1.705(b). Additionally, the issue fee was paid on September 20, 2007. Accordingly, by decision mailed October 28, 2008, the application for patent term adjustment filed March 13, 2008 was properly dismissed as untimely filed (after payment of the issue fee).

Moreover, the request to correct patent term adjustment filed on March 13, 2008 agreed with the period of adjustment entered for Office delay (including the over three year period). As such, patentees acquiesced to the Office's calculation of the period of adjustment for over three year delay. The subject application filed November 3, 2008 first raised the issue of calculation of the over three year delay. However, the subject application was filed more than seven (7) months after the date of issuance of

the patent. As the instant request for reconsideration of patent term adjustment pursuant to 37 CFR 1.705(d) first requests reconsideration of the over three year delay and was not filed within two (2) months of the date of issuance of the patent, such request is clearly untimely.

Submission of the $200.00 fee set forth in 37 CFR 1.18(e) is acknowledged. No additional fees are required.

Telephone inquiries specific to this matter should be directed to Senior Petitions Attorney Douglas I. Wood at (571) 272-3231.

Nancy Johnson
Senior Petitions Attorney
Office of Petitions

UNITED STATES PATENT AND TRADEMARK OFFICE

Commissioner for Patents
United States Patent and Trademark Office
P.O. Box 1450
Alexandria, VA 22313-1450
www.uspto.gov

MATTINGLY, STANGER, MALUR &
BRUNDIDGE, P.C.
1800 Diagonal Road
Suite 370
Alexandria, VA 22314

MAILED

MAR 2 2 2006

Technology Center 2100

In re Application of:
K. SONODA, et al.
Application No. 10/817,608
Filed: April 02, 2004
For: FILE SYSTEM

DECISION ON PETITION
TO MAKE SPECIAL

This is a decision on the petition, filed on 20 July 2005 under 37 C.F.R. §102(d) and M.P.E.P. § 708.02(VIII): Accelerated Examination, to make the above-identified application special.

The petition is **GRANTED**.

M.P.E.P. § 708.02, Section VIII which sets out the prerequisites for a grantable petition for Accelerated Examination under 37 C.F.R. § 102(d) states in relevant part:

> A new application (one which has not received any examination by the examiner) may be granted special status provided that applicant (and this term includes applicant's attorney or agent) complies with each of the following items:
>
> (A) Submits a petition to make special accompanied by the fee set forth in 37 CFR 1.17(h);
>
> (B) Presents all claims directed to a single invention, or if the Office determines that all the claims presented are not obviously directed to a single invention, will make an election without traverse as a prerequisite to the grant of special status;
>
> (C) Submits a statement(s) that a pre-examination search was made, listing the field of search by class and subclass, publication, Chemical Abstracts, foreign patents, etc. A search made by a foreign patent office satisfies this requirement;
>
> (D) Submits one copy each of the references deemed most closely related to the subject matter encompassed by the claims if said references are not already of record; and
>
> (E) Submits a detailed discussion of the references, which discussion points out, with the particularity required by 37 CFR 1.111 (b) and (c), how the claimed subject matter is patentable over the references.

Applicant's submission of 20 July 2005 meets all the criteria set out above. Accordingly, the petition is **GRANTED**. The application file is being forwarded to the

Examiner for accelerated examination in accordance with M.P.E.P. § 708.02. If the application is subsequently allowed, it will be given priority for printing. See M.P.E.P. § 1309.

Vincent N. Trans
Special Program Examiner
Technology Center 2100
Computer Architecture, Software, and
Information Security
571-272-3613

UNITED STATES PATENT AND TRADEMARK OFFICE

COMMISSIONER FOR PATENTS
UNITED STATES PATENT AND TRADEMARK OFFICE
P.O. BOX 1450
ALEXANDRIA, VA 22313-1450
www.uspto.gov

FELLERS, SNIDER, BLANKENSHIP, BAILEY & TIPPENS, P.C.
100 NORTH BROADWAY
SUITE 1700
OKLAHOMA CITY, OK 73102-8820

MAILED
SEP 30 2005
Technology Center 2100

In re Application of: SICOLA, et al.
Application No. 10/817,617
Filed: April 2, 2004
For: MANAGED RELIABILITY STORAGE SYSTEM AND METHOD

DECISION ON PETITION TO MAKE SPECIAL (ACCELERATED EXAMINATION) UNDER M.P.E.P. §708.02 (VIII)

This is a response to the petition filed 22 August 2005 under 37 C.F.R. §1.102(d) and M.P.E.P. §708.02 (VIII): Accelerated Examination, to make the above-identified application special.

The Petition is **DISMISSED**.

M.P.E.P. §708.02, Section VIII which sets out the prerequisites for a grantable petition for Accelerated Examination under 37 C.F.R. §1.102(d) states in relevant part:

A new application (one which has not received any examination by the examiner) may be granted special status provided that applicant (and this term includes applicant's attorney or agent) complies with each of the following items:

(a) Submits a petition to make special accompanied by the fee set forth in **37 CFR 1.17(h)**;

(b) Presents all claims directed to a single invention, or if the Office determines that all the claims presented are not obviously directed to a single invention, will make an election without traverse as a prerequisite to the grant of special status;

(c) Submits a statement(s) that a pre-examination search was made, listing the field of search by class and subclass, publication, Chemical Abstracts, foreign patents, etc. The pre-examination search must be directed to the invention as claimed in the application for which special status is requested. A search made by a foreign patent office satisfies this requirement;

(d) Submits one copy each of the references deemed most closely related to the subject matter encompassed by the claims if said references are not already of record; and

(e) Submits a detailed discussion of the references, which discussion points out, with the particularity required by 37 CFR 1.111 (b) and (c), how the claimed subject matter is patentable over the references.

In those instances where the request for this special status does not meet all the prerequisites set forth above, **applicant will be notified and the defects in the request will be stated**. The application will remain in the status of a new application awaiting action in its regular turn. In those instances where a request is defective in one or more respects, applicant will be given one opportunity to perfect the request in a renewed petition to make special. If perfected, the request will then be granted. If not perfected in the first renewed petition, any additional renewed petitions to make special may or may not be considered at the discretion of the Technology Center (TC) Special Program Examiner.

The petition filed 22 August 2005 fails to adequately meet requirement (e) of the criteria set forth above. The petition essentially states that the entirety of each of claims 42, 55, and 69 is not taught by any of the references deemed most closely related. Such a statement is not a sufficient detailed description. Additionally, the discussion of the references is not sufficiently detailed. The description of each reference is only a few sentences long and gives only a cursory description.

Petition to Make Special **DISMISSED**.

Petitioner is given one opportunity to perfect the petition. Any request for reconsideration must be filed within TWO MONTHS of the mail date of this decision.

Until the renewed petition is submitted, the application will be returned to the examiner's docket to await treatment on the merits in the normal order of examination.

Pinchus M. Laufer
Special Program Examiner
Technology Center 2100
Computer Architecture, Software and Information Security
571-272-3599

ds

UNITED STATES PATENT AND TRADEMARK OFFICE

COMMISSIONER FOR PATENTS
UNITED STATES PATENT AND TRADEMARK OFFICE
P.O. BOX 1450
ALEXANDRIA, VA 22313-1450
www.uspto.gov

FELLERS, SNIDER, BLANKENSHIP, BAILEY & TIPPENS, P.C.
100 NORTH BROADWAY
SUITE 1700
OKLAHOMA CITY, OK 73102-8820

MAILED
DEC 27 2005
Technology Center 2100

In re Application of: SICOLA, et al.
Application No. 10/817,617
Filed: April 2, 2004
For: MANAGED RELIABILITY STORAGE SYSTEM AND METHOD

DECISION ON PETITION TO MAKE SPECIAL (ACCELERATED EXAMINATION) UNDER M.P.E.P. §708.02 (VIII)

This is a response to the renewed petition filed 30 November 2005, under 37 C.F.R. §1.102(d) and M.P.E.P. §708.02 (VIII): Accelerated Examination, to make the above-identified application special.

The renewed petition was filed in response to a dismissal of the original petition filed 22 August 2005. The petition was dismissed for failure to provide a detailed discussion of the references, which discussion points out with the particularity required by 37 CFR 1.111(b) and (c), how the claimed subject matter is patentable over the references.

Applicants' submission filed 30 November 2005 corrects the deficiencies noted in the original decision. Although the discussion recites essentially all of the limitations of claims 42, 55, and 69, it is nevertheless sufficient since each independent claim contains relatively few limitations. Accordingly, the petition is **GRANTED**.

The application file is being forwarded to the Examiner of Record for accelerated examination according to the procedures set forth in MPEP § 708.02, Section VIII.

Pinchus M. Laufer
Special Program Examiner
Technology Center 2100
Computer Architecture, Software and Information Security
571-272-3599

ds

UNITED STATES PATENT AND TRADEMARK OFFICE

Commissioner for Patents
United States Patent and Trademark Office
P.O. Box 1450
Alexandria, VA 22313-1450
www.uspto.gov

DONALD F. HAAS
SHELL OIL COMPANY
LEGAL - INTELLECTUAL PROPERTY
P.O. BOX 2463
HOUSTON, TX 77252-2463

COPY MAILED

MAR 1 8 2005

OFFICE OF PETITIONS

In re Application of	:
Charles Lee Edwards et al	:DECISION ON PETITIONS
Application No. 10/817,640	:UNDER 37 CFR 1.78(a)(3)
Filed: April 2, 2004	:
Attorney Docket No. TH1647 07 (US)	:

This is a decision on the petition filed October 18, 2004, under 37 CFR § 1.78(a)(3), to accept an unintentionally delayed claim under 35 U.S.C. § 120 for the benefit of the prior-filed nonprovisional applications set forth in the concurrently filed amendment.

The petition is **DISMISSED AS MOOT**.

A petition under 37 CFR § 1. 78(a)(3) is only applicable to those applications filed on or after November 29, 2000.

Along with the instant petition under 37 CFR § 1.78(a)(3) , petitioner has submitted an amendment to the first sentence of the specification following the title to include a reference to the prior-filed applications.

The instant pending nonprovisional application was filed on April 2, 2004, and was pending at the time of filing of the instant petition. While a reference to the prior-filed applications was not included in an ADS or in the first sentence of the specification following the title, reference nevertheless was made in the transmittal letter filed with the above-identified application.

The current procedure where a claim for priority under 37 CFR § 1.78(a)(3) is not included in the first sentence of the specification or in an ADS but does appear either in the oath or declaration or a transmittal letter filed with the application and the Office notes the claim for priority, no petition will be required to accept a late claim for priority. This is because the application would have been scheduled for publication on the basis of the information concerning the claim submitted elsewhere in the application within the time period set forth in 37 CFR § 1.78(a)(2)(ii). However, on the other hand, if the USPTO does not note the claim for priority to the prior-filed application(s) set forth in the oath or declaration or transmittal letter submitted with the

application, a petition will be required to accept a late claim for priority under 37 CFR § 1.78(a)(3).[1] In the instant case, the Office noted the claim for priority of the prior-filed applications in the transmittal letter filed with the application, as shown by their inclusion on the filing receipt.

In view of the above, petitioner may request a refund of the petition fee ($1,370), by writing to the Office of Finance, Refund Section. A copy of this decision should accompany petitioner's request.

Any questions concerning this decision on petition may be directed to the undersigned at (571) 272-3208. All other inquiries concerning either the examination procedures or status of the application should be directed to the Technology Center.

This matter is being referred to the Examiner of Technology Center AU 1621 for appropriate action on the amendment filed October 18, 2004, including consideration of the claim under 35 U.S.C. § 120 and 37 CFR 1.78(a)(2) for benefit of the prior-filed applications.

Karen Creasy

Karen Creasy
Petitions Examiner
Office of Petitions
Office of the Deputy Commissioner
for Patent Examination Policy[1]

---

[1] *Note* MPEP 201.11 (III)(D) , pages 200-59 and 200-60 (Rev. 2. May 2004) and 66 Federal Register 67087 at 67089 (Dec. 28, 2001), effective December 28, 2001.

UNITED STATES PATENT AND TRADEMARK OFFICE

Commissioner for Patents
United States Patent and Trademark Office
P.O. Box 1450
Alexandria, VA 22313-1450
www.uspto.gov

VIKSNINS HARRIS & PADYS PLLP
P.O. BOX 111098
ST. PAUL MN 55111-1098

COPY MAILED
DEC 02 2008

In re Application of	:	
Guo-Hua Zheng et al	:	
Application No. 10/817,643	:	DECISION ON PETITION
Filed: April 2, 2004	:	
Attorney Docket No. 17662.002US1	:	

This is a decision on the petition under the unintentional provisions of 37 CFR 1.137(b), filed September 29, 2008, to revive the above-identified application.

The petition is **GRANTED**.

The petition satisfies the conditions for revival pursuant to the provisions of 37 CFR 1.137(b) in that (1) the reply in the form of an amendment; (2) the petition fee; and (3) the required statement of unintentional delay have been received. Accordingly, the reply to the nonfinal rejection mailed January 22, 2008, is accepted as having been unintentionally delayed.

An extension of time under 37 CFR 1.136 must be filed prior to the expiration of the maximum extendable period for reply. *See* In re Application of S., 8 USPQ2d 1630, 1631 (Comm'r Pats. 1988). Since the $1,050 extension of time fee submitted with the petition on September 29, 2008 was subsequent to the maximum extendable period for reply, this fee is unnecessary and will be credited to petitioner's deposit account.

Telephone inquiries concerning this decision should be directed to the undersigned at (571) 272-3208.

This application is being referred to Technology Center AU 1794 for appropriate action by the Examiner in the normal course of business on the reply received September 29, 2008.

Karen Creasy

Karen Creasy
Petitions Examiner
Office of Petitions

UNITED STATES PATENT AND TRADEMARK OFFICE

Commissioner for Patents
United States Patent and Trademark Office
P.O. Box 1450
Alexandria, VA 22313-1450
www.uspto.gov

WARNER NORCROSS & JUDD LLP
INTELLECTUAL PROPERTY PRACTICE GROUP
900 FIFTH THIRD CENTER
111 LYON STREET, N.W.
GRAND RAPIDS, MI 49503-2487

COPY MAILED

FEB 16 2007

OFFICE OF PETITIONS

In re Application of	:	
Cheol Kim	:	
Application No. 10/817,650	:	ON PETITION
Filed: April 2, 2004	:	
Attorney Docket No. 70591.86468-001	:	

This is a decision on the petition filed, September 18, 2006 under 37 CFR 1.137(b), to revive the above-identified application.

The petition is **GRANTED.**

The above-identified application became abandoned for failure to reply within the meaning of 37 CFR 1.113 in a timely manner to the final Office action mailed January 6, 2006, which set a shortened statutory period for reply of three (3) months. Three-month extension of time under the provisions of 37 CFR 1.136(a) were obtained. Accordingly, the above-identified application became abandoned on July 7, 2006.

The above-identified application is being revived solely for purposes of continuity with a Request For Continued Examination (RCE) filed on September 18, 2006.

Telephone inquiries concerning this decision should be directed to Irvin Dingle at (571) 272-3210.

This matters is being referred to Technology Center AU 3715 for further processing.

Irvin Dingle
Petitions Examiner
Office of Petitions

UNITED STATES PATENT AND TRADEMARK OFFICE

UNITED STATES DEPARTMENT OF COMMERCE
United States Patent and Trademark Office
Address: COMMISSIONER FOR PATENTS
P.O. Box 1450
Alexandria, Virginia 22313-1450
www.uspto.gov

MENDELSOHN, DRUCKER, & ASSOCIATES, P.C.
1500 JOHN F. KENNEDY BLVD., SUITE 405
PHILADELPHIA, PA 19102

Mail Date: 04/30/2010

Applicant	: Bharat T. Doshi	: DECISION ON REQUEST FOR
Patent Number	: 7609637	: RECALCULATION of PATENT
Issue Date	: 10/27/2009	: TERM ADJUSTMENT IN VIEW
Application No	: 10/817,671	: OF WYETH AND NOTICE OF INTENT TO
Filed	: 04/02/2004	: ISSUE CERTIFICATE OF CORRECTION
		:

The Request for Recalculation is **GRANTED** to the extent indicated.

The patent term adjustment has been determined to be **1548** days. The USPTO will *sua sponte* issue a certificate of correction reflecting the amount of PTA days determined by the recalculation.

Prior to the issuance of the certificate of correction, the USPTO will afford patentee an opportunity to be heard and request reconsideration. Accordingly, patentee has **one month or thirty (30) days**, whichever is longer, to file a request for reconsideration of this patent term adjustment calculation. See 35 U.S.C. 154(b)(3)(B)(ii) and 37 CFR 1.322(a)(4). No extensions of time will be granted under 37 CFR 1.136.

Patentee should use document code PET.OP if electronically filing a request for reconsideration of this patent term adjustment calculation. The patentee must also include the information required by 37 CFR 1.705(b)(2) and the fee required by 37 CFR 1.18(e). If patentee does not file a timely request for reconsideration of this patent term adjustment calculation including the information required by 37 CFR 1.705(b)(2) and the fee required by 37 CFR 1.18(e), the USPTO will issue a certificate of correction reflecting the PTA determination noted above.

Patentee should be aware that in order to preserve the right to review in the United States District Court for the District of Columbia of the USPTO patent term adjustment determination, patentee must ensure that he or she also take the steps required under 35 U.S.C. 154(b)(4)(A) in a timely manner. Nothing in the request for recalculation should be construed as providing an alternative time frame for commencing a civil action under 35 U.S.C. 154(b)(4)(A).

Any questions concerning this decision should be directed to the Office of Patent Legal Administration at 571-272-7702.

UNITED STATES PATENT AND TRADEMARK OFFICE

Commissioner for Patents
United States Patent and Trademark Office
P.O. Box 1450
Alexandria, VA 22313-1450
www.uspto.gov

MAILED
FROM DIRECTORS OFFICE

SEP 13 2005

TECHNOLOGY CENTER 3800

BRANDE AND MCCLEARY
5976 FALLING TREE LANE
ALTA LOMA, CA 91737

In re application of Richard F. Klein Application No. 10/817,673 Filed:. April 02, 2004 For: TANK SUPPORT BRACKET	: : : :	**DECISION ON PETITION TO MAKE SPECIAL (APPLICANT'S AGE)**

This is a decision on the petition submitted on June 17, 2005 under 37 CFR 1.102 (c) to make the above-identified application special under the accelerated examination procedure set forth in MPEP 708.02, Section IV: Applicant's Age.

The petition is **GRANTED**.

An application may be accorded special status upon the filing of a petition providing evidence showing that the applicant is at least 65 years old. Such a showing may be provided by evidence such as a birth certificate or a statement from the applicant.

The evidence submitted with the petition is a birth certificate indicating Mr. Klein is at least 65 years of age.

The examiner is directed (1) to make an interference search for possible interfering applications, (2) to promptly examine this application out of turn, and (3) if any interfering application is discovered, to examine such application simultaneously and state in the first official letter of such application that it is being taken out of turn because of a possible interference.

Petitioner is advised that this application will continue to be special, throughout its entire prosecution and pendency, including interference or appeal, if any, only if petitioners makes a prompt ***bona fide*** effort, in response to each Office action, to place the application in condition for allowance, even if it is necessary to conduct an interview with the examiner to accomplish this purpose.

SUMMARY: Petition to Make Special **GRANTED**.

Kenneth J. Dorner
Special Programs Examiner
Technology Center 3600
(571) 272-6587

KJD/slb: 07/21/05

UNITED STATES PATENT AND TRADEMARK OFFICE

UNITED STATES DEPARTMENT OF COMMERCE
United States Patent and Trademark Office
Address: COMMISSIONER FOR PATENTS
P.O. Box 1450
Alexandria, Virginia 22313-1450
www.uspto.gov

APPL NO.	FILING OR 371 (c) DATE	ART UNIT	FIL FEE REC'D	ATTY.DOCKET NO	DRAWINGS	TOT CLMS	IND CLMS
10/817,696	04/01/2004	1725	385	7268-3	8	12	3

CONFIRMATION NO. 3182

CORRECTED FILING RECEIPT

OC000000013307007

22442
SHERIDAN ROSS PC
1560 BROADWAY
SUITE 1200
DENVER, CO 80202

Date Mailed: 07/22/2004

Receipt is acknowledged of this regular Patent Application. It will be considered in its order and you will be notified as to the results of the examination. Be sure to provide the U.S. APPLICATION NUMBER, FILING DATE, NAME OF APPLICANT, and TITLE OF INVENTION when inquiring about this application. Fees transmitted by check or draft are subject to collection. Please verify the accuracy of the data presented on this receipt. **If an error is noted on this Filing Receipt, please write to the Office of Initial Patent Examination's Filing Receipt Corrections, facsimile number 703-746-9195. Please provide a copy of this Filing Receipt with the changes noted thereon. If you received a "Notice to File Missing Parts" for this application, please submit any corrections to this Filing Receipt with your reply to the Notice. When the USPTO processes the reply to the Notice, the USPTO will generate another Filing Receipt incorporating the requested corrections (if appropriate).**

Applicant(s)

Roger V. Maes, Lakewood, CO;

Domestic Priority data as claimed by applicant

Foreign Applications

If Required, Foreign Filing License Granted: 06/11/2004

Projected Publication Date: 10/06/2005

Non-Publication Request: No

Early Publication Request: No

**** SMALL ENTITY ****

Title

Apparatus for positioning pipe and tubing

Preliminary Class

LICENSE FOR FOREIGN FILING UNDER
Title 35, United States Code, Section 184
Title 37, Code of Federal Regulations, 5.11 & 5.15

GRANTED

The applicant has been granted a license under 35 U.S.C. 184, if the phrase "IF REQUIRED, FOREIGN FILING LICENSE GRANTED" followed by a date appears on this form. Such licenses are issued in all applications where the conditions for issuance of a license have been met, regardless of whether or not a license may be required as set forth in 37 CFR 5.15. The scope and limitations of this license are set forth in 37 CFR 5.15(a) unless an earlier license has been issued under 37 CFR 5.15(b). The license is subject to revocation upon written notification. The date indicated is the effective date of the license, unless an earlier license of similar scope has been granted under 37 CFR 5.13 or 5.14.

This license is to be retained by the licensee and may be used at any time on or after the effective date thereof unless it is revoked. This license is automatically transferred to any related applications(s) filed under 37 CFR 1.53(d). This license is not retroactive.

The grant of a license does not in any way lessen the responsibility of a licensee for the security of the subject matter as imposed by any Government contract or the provisions of existing laws relating to espionage and the national security or the export of technical data. Licensees should apprise themselves of current regulations especially with respect to certain countries, of other agencies, particularly the Office of Defense Trade Controls, Department of State (with respect to Arms, Munitions and Implements of War (22 CFR 121-128)); the Office of Export Administration, Department of Commerce (15 CFR 370.10 (j)); the Office of Foreign Assets Control, Department of Treasury (31 CFR Parts 500+) and the Department of Energy.

NOT GRANTED

No license under 35 U.S.C. 184 has been granted at this time, if the phrase "IF REQUIRED, FOREIGN FILING LICENSE GRANTED" DOES NOT appear on this form. Applicant may still petition for a license under 37 CFR 5.12, if a license is desired before the expiration of 6 months from the filing date of the application. If 6 months has lapsed from the filing date of this application and the licensee has not received any indication of a secrecy order under 35 U.S.C. 181, the licensee may foreign file the application pursuant to 37 CFR 5.15(b).

UNITED STATES POSTAL SERVICE

Track & Confirm

Shipment Details

You entered EL97 5242 155U S

Your item was delivered at 9:04 am on April 05, 2004 in ALEXANDRIA, VA 22313 to PATENT OFFICE. The item was signed for by M BOSTON.

Here is what happened earlier:

- ARRIVAL AT PICK-UP-POINT, April 02, 2004, 2:34 pm, ALEXANDRIA, VA 22313
- ARRIVAL AT UNIT, April 02, 2004, 2:29 pm, DULLES, VA 20102
- ENROUTE, April 02, 2004, 1:08 pm, DULLES, VA 20102
- ENROUTE, April 01, 2004, 11:11 pm, DENVER, CO 80249
- ACCEPTANCE, April 01, 2004, 7:41 pm, DENVER, CO 80202

Track & Confirm

Enter label number:

Track & Confirm FAQs Go >

Notification Options

- Track & Confirm by email What is this? Go >
- Request Proof of Delivery What is this? Go >

POSTAL INSPECTORS
Preserving the Trust

site map contact us government services

Copyright © 1999-2002 USPS. All Rights Reserved. Terms of Use Privacy Policy

Initial: BPJ/cmj

Date 4/1/04

PTO Stamp indicates receipt of: [X] Patent Matter [] Trademark Matter

RECEIVED
APR 1 4 2004
SHERIDAN, ROSS

Application Docket No.: 7268-3

Applicant: Maes

Title or Mark: APPARATUS FOR POSITIONING PIPE AND TUBING

Serial/Reg. No.: Not yet assigned

22859 U.S. PTO
10/817696

Filed/Issued Date: Herewith

[] Certificate of Mailing

[X] Express Mail No.: EL 975242155 US 033104

[X] Checks for $40.00 and $385.00

_____ # of Pages in Specification

_____ # of Pages in Claims

_____ # of Sheets in Drawings

_____ # of Pages in Seq. Listing

LIST ALL DOCUMENTS BEING SENT TO PATENT OFFICE:

Utility Patent Application Transmittal; Utility Patent Application; Declaration; Recordation of Assignment; Assignment; Power of Attorney; Information Disclosure Statement; PTO-1449 form; and copies of cited references.

EL 975242155 US

Customer Copy
Label 11-F June 2002

EXPRESS MAIL
UNITED STATES POSTAL SERVICE

Post Office To Addressee

ORIGIN (POSTAL USE ONLY)

PO ZIP Code: 90292

Day of Delivery: [] Next [X] Second

Flat Rate Envelope: [X] 13.65

Date In: Mo. 4 Day 1 Year 4

[X] 12 Noon [] 3 PM

Postage: $

Time In: [] AM [] PM

Return Receipt Fee

Weight: lbs. oz.

Int'l Alpha Country Code

COD Fee

Insurance Fee

No Delivery: [] Weekend [] Holiday

Acceptance Clerk Initials

Total Postage & Fees: $ 13.65

DELIVERY (POSTAL USE ONLY)

Delivery Attempt: Mo. Day

Time: [] AM [] PM

Employee Signature

Delivery Attempt: Mo. Day

Time: [] AM [] PM

Employee Signature

Delivery Date: Mo. Day

Time: [] AM [] PM

Employee Signature

[] WAIVER OF SIGNATURE (Domestic Only) Additional merchandise insurance is void if waiver of signature is requested. I wish delivery to be made without obtaining signature of addressee or addressee's agent (if delivery employee judges that article can be left in secure location) and I authorize that delivery employee's signature constitutes valid proof of delivery.

NO DELIVERY [] Weekend [] Holiday

Customer Signature

CUSTOMER USE ONLY

METHOD OF PAYMENT:

Express Mail Corporate Acct. No.

Federal Agency Acct. No. or Postal Service Acct. No.

FROM: (PLEASE PRINT) PHONE ( )

TO: (PLEASE PRINT) PHONE ( )

PRESS HARD.
You are making 3 copies

FOR PICKUP OR TRACKING CALL 1-800-222-1811 www.usps.com

EMS

RECEIVED
CENTRAL FAX CENTER
AUG 0 1 2005

8-3-05

IN THE UNITED STATES PATENT AND TRADEMARK OFFICE

In re the application of: Roger V. Maes

Serial No.: 10/817,696

Filed: April 1, 2004

Title: Apparatus for Positioning Pipe and Tubing

Attorney Docket No. 7216-003US

Group Art Unit: ~~3723~~ 1725

Examiner: Unknown Edmondson, L

Tel:

Date of Faxing: 8/1/05

Fax Phone: 703-872-9306

Certification under 37 CFR 1.6	Faxing Date: 8/1/05
I hereby certify that this paper is being sent on the above stated date by fax to the telephone number noted above.	
	Total pages 1
Name: Betty Oppenheimer	Signature:

PETITION TO MAKE SPECIAL

37 CFR §1.102

Applicant Roger V. Maes respectfully submits this petition to make special based upon applicant's age. 37 CFR 1.102(c). Because the petition is based on age, no fee is due.

Statement of Inventor

In Support Of Petition To Make Special

In support of Applicant's Petition To Make Special, I, Roger V. Maes, the inventor in this case identified above, hereby state that I am 69 years of age.

I declare that the above statement is true and correct, that that this statement is made with the knowledge that willful false statements are punishable by fine or imprisonment, or both, under Section 1001 of Title 18, United States Code, and that such willful false statements may jeopardize the validity of the application or any patent issuing thereon.

Date: 7/29/05 Roger V. Maes

Inventor's Name

PETITION GRANTED

Richard Crispino
Special Program Examiner
TC 1700

AUG 10 2005

UNITED STATES PATENT AND TRADEMARK OFFICE

Commissioner for Patents
United States Patent and Trademark Office
P.O. Box 1450
Alexandria, VA 22313-1450
www.uspto.gov
DIW Aug-05

GREGORY J. KOERNER
REDWOOD PATENT LAW
1291 EAST HILLSDALE BOULEVARD
SUITE 205
FOSTER CITY CA 94404

COPY MAILED

AUG 2 5 2005

OFFICE OF PETITIONS

In re Application of	:	
Mitchell et al.	:	DECISION ON PETITION
Application No. 10/817,701	:	
Filed: 2 April, 2004	:	
Atty Docket No. M109US-GEN3BAT	:	

This is a decision on the petition, filed on 7 March, 2005, under 37 CFR 1.137(f) which is treated as a petition to revive the above-identified nonprovisional application under the unintentional provisions of 37 CFR 1.137(b).

The petition is **GRANTED**.

Petitioner states that the present nonprovisional application is the subject of a foreign or international application filed on 8 July, 2004. However, the U.S. Patent and Trademark Office was unintentionally not notified of this filing within 45 days subsequent to the filing of the subject application in a foreign country.

In view of the above, this application became abandoned pursuant to 35 U.S.C. § 122(b)(2)(B)(iii) and 37 CFR 1.213(c) for failure to timely notify the Office of the filing of an application in a foreign country, or under a multilateral international agreement, that requires publication of applications 18 months after filing.

A petition under 37 CFR 1.137(f) must be accompanied by:

(1) the reply which is met by the notification of such filing in a foreign country or under a multinational treaty;

(2) the petition fee as set forth in 37 CFR 1.17(m); and

(3) a statement that the entire delay in filing the required reply from the due date of the reply until the filing of a grantable petition was unintentional.

The present petition has been found to be in compliance with 37 CFR 1.137(f). Accordingly, the failure to timely notify the Office of a foreign or international filing within 45 days after the date of filing of such foreign or international application as provided by 35 U.S.C. § 122(b)(2)(B)(i) has been rescinded.

A Communication Regarding Rescission of Nonpublication Request and/or Notice of Foreign Filing, which sets forth the projected publication date of 1 December, 2005, is enclosed herewith.

The application is being referred to Technology Center Art Unit 1745 for examination in due course.

Any inquiries concerning this decision may be directed to the undersigned at 571.272.3231.

D Wood

Douglas I. Wood
Senior Petitions Attorney
Office of Petitions

Encl: Communication Regarding Rescission of Nonpublication Request and/or Notice of Foreign Filing

UNITED STATES PATENT AND TRADEMARK OFFICE

Commissioner for Patents
United States Patent and Trademark Office
P.O. Box 1450
Alexandria, VA 22313-1450
www.uspto.gov

Maxwell Technologies, Inc.
Att. Intellectual Property Dept.
9244 Balboa Ave.
San Diego CA 92123

COPY MAILED

APR 1 2 2007

OFFICE OF PETITIONS

In re Application of :
Xi, et al. :
Application No. 10/817,702 : ON PETITION
Filed: April 2, 2004 :
Attorney Docket No. M109US-GEN.5 :
For: DRY PARTICLE BASED ADHESIVE AND DRY FILM AND METHODS OF MAKING SAME

This is a decision on the petition, filed February 16, 2007, under 37 CFR 1.137(b) to revive the above-identified application.

The above-identified application became abandoned for failure to timely submit a reply within three (3) months of the mailing of the July 6, 2006 non-final Office action. No response being received and no extensions of time being obtained, this application became abandoned on October 7, 2006. The filing of the present petition precedes the mailing of A Notice of Abandonment.

Applicants have submitted an amendment in reply to the July 6, 2006 non-final Office action, an acceptable statement of the unintentional nature of the delay in responding to the July 6, 2006 non-final Office action, and the petition fee.

The statement of unintentional delay was not signed by a person who would have been in a position of knowing that the delay in filing a timely response was unintentional. In the event that petitioner has no knowledge that the delay was in fact unintentional, petitioner should make a reasonable inquiry to ascertain that, in fact, the delay was unintentional. If petitioner discovers that the delay was intentional, petitioner must so notify the Office. A courtesy copy of this decision is being mailed to petitioner. However, any future correspondence regarding this application will be mailed to the address of record.

The petition is **GRANTED**.

After the mailing of this decision the application will be forwarded to Technology Center G.A.U. 2831 for consideration of the amendment filed on February 16, 2007.

Telephone inquiries should be directed to the undersigned at (571) 272-3230.

Shirene Willis Brantley

Shirene Willis Brantley
Senior Petitions Attorney
Office of Petitions
Office of the Deputy Commissioner
for Patent Examination Policy

CC: THOMAS J. OSBORNE, JR.
HENSLEY KIM & EDGINGTON, LLC
1660 LINCOLN STREET, SUITE 3050
DENVER CO 80264

UNITED STATES PATENT AND TRADEMARK OFFICE

Commissioner for Patents
United States Patent and Trademark Office
P.O. Box 1450
Alexandria, VA 22313-1450
www.uspto.gov

JJGJR.: 10-07

Paper No: __

ROYLANCE, ABRAMS,
BERDO & GOODMAN, L.L.P.
1300 19TH STREET, N.W.
SUITE 600
WASHINGTON, DC 20036

COPY MAILED
OCT 09 2007
OFFICE OF PETITIONS

In re Application of
Crandall, et al.
Application No. 10/817,706
Filed: 2 April, 2004
Attorney Docket No. 53138

ON PETITION

This is a decision on a petition filed on 12 January, 2007, under 37 C.F.R. §1.137(b).

The Office regrets the delay in addressing this matter, however, the instant petition was presented to the attorneys in the Office of Petitions only at this writing.[1]

The petition under 37 C.F.R. §1.137(b) is **GRANTED**.

BACKGROUND

The record indicates:

- Petitioner failed to reply timely and properly to the non-final Office action mailed on 15 June, 2005, with reply absent and extension of time on or before 15 September, 2005;

[1] **NOTE: Monitoring of the status of applications on PAIR can inform one's management of application responses and provide an indication when mailings of Office actions should be expected. Status Inquiries filed at three (3) or four (4) month intervals provide a demonstration of diligence and attention in supporting a petition seeking relief under 37 C.F.R. §1.181.**

- the instant application went abandoned by operation of law after midnight 15 September, 2005;
- the Office mailed a Notice of Abandonment on 15 March, 2006;
- Petitioner filed the instant petition with fee, a reply in the form of an amendment (the reference in IFW is that the amendment is informal or non-responsive, however, this appears to be an improvident annotation because there is no indication that the Examiner has considered the papers in question) and Petitioner (now former Counsel) made the statement of unintentional delay.

It is noted that Petitioner has filed a request/fee for extension of time and there is no indication that such a request/fee was necessary or proper–should Petitioner upon review of the file conclude that the request fee indeed was unnecessary Petitioner may request a refund from the Office of Finance and include a copy of this decision with the request.

Out of an abundance of caution, Petitioners always are reminded that the filing of a petition under 37 C.F.R. §1.181 does not toll any periods that may be running any action by the Office and a petition seeking relief under the regulation must be filed within two (2) months of the act complained of (see: 37 C.F.R. §1.181(f)), and those registered to practice *and* all others who make representations before the Office must inquire into the underlying facts of representations made to the Office and support averments with the appropriate documentation–since all owe to the Office the continuing duty to disclose.[2]

---

[2] See supplement of 17 June, 1999. The Patent and Trademark Office is relying on petitioner's duty of candor and good faith and accepting a statement made by Petitioner. See Changes to Patent Practice and Procedure, 62 Fed. Reg. at 53160 and 53178, 1203 Off. Gaz. Pat. Office at 88 and 103 (responses to comments 64 and 109)(applicant obligated under 37 C.F.R. §10.18 to inquire into the underlying facts and circumstances when providing statements to the Patent and Trademark Office).

Specifically, the regulations at 37 C.F.R. §10.18 provide:

§ 10.18 Signature and certificate for correspondence filed in the Patent and Trademark Office.
(a) For all documents filed in the Office in patent, trademark, and other non-patent matters, except for correspondence that is required to be signed by the applicant or party, each piece of correspondence filed by a practitioner in the Patent and Trademark Office must bear a signature by such practitioner complying with the provisions of §1.4(d), §1.4(e), or § 2.193(c)(1) of this chapter.
(b) By presenting to the Office (whether by signing, filing, submitting, or later advocating) any paper, the party presenting such paper, whether a practitioner or non-practitioner, is certifying that—

(1) All statements made therein of the party's own knowledge are true, all statements made therein on information and belief are believed to be true, and all statements made therein are made with the knowledge that whoever, in any matter within the jurisdiction of the Patent and Trademark Office, knowingly and willfully falsifies, conceals, or covers up by any trick, scheme, or device a material fact, or makes any false, fictitious or fraudulent statements or representations, or makes or uses any false writing or document knowing the same to contain any false, fictitious or fraudulent statement or entry, shall be subject to the penalties set forth under 18 U.S.C. 1001, and that violations of this paragraph may jeopardize the validity of the application or document, or the validity or enforceability of any patent, trademark registration, or certificate resulting therefrom; and

(2) To the best of the party's knowledge, information and belief, formed after an inquiry reasonable under the circumstances, that —

(i) The paper is not being presented for any improper purpose, such as to harass someone or to cause unnecessary delay or needless increase in the cost of prosecution before the Office;

(ii) The claims and other legal contentions therein are warranted by existing law or by a nonfrivolous argument for the extension,

STATUTES, REGULATIONS AND ANALYSIS

Congress has authorized the Commissioner to "revive an application if the delay is shown to the satisfaction of the Commissioner to have been "unavoidable." 35 U.S.C. §133 (1994).[3]

The regulations at 37 C.F.R. §1.137(a) and (b) set forth the requirements for a petitioner to revive a previously unavoidably or unintentionally, respectively, abandoned application under this congressional grant of authority. The language of 35 U.S.C. §133 and 37 C.F.R. §1.137(a) is clear, unambiguous, and without qualification: the delay in tendering the reply to the outstanding Office action, as well as filing the first petition seeking revival, must have been unavoidable for the reply now to be accepted on petition.[4]

Delays in responding properly raise the question whether delays are unavoidable.[5] Where there is a question whether the delay was unavoidable, Petitioners must meet the burden of establishing that the delay was unavoidable within the meaning of 35 U.S.C. §133 and 37 C.F.R. §1.137(a).[6]

---

modification, or reversal of existing law or the establishment of new law;

(iii) The allegations and other factual contentions have evidentiary support or, if specifically so identified, are likely to have evidentiary support after a reasonable opportunity for further investigation or discovery; and

(iv) The denials of factual contentions are warranted on the evidence, or if specifically so identified, are reasonably based on a lack of information or belief.

(c) Violations of paragraph (b)(1) of this section by a practitioner or non-practitioner may jeopardize the validity of the application or document, or the validity or enforceability of any patent, trademark registration, or certificate resulting therefrom. Violations of any of paragraphs (b)(2)(i) through (iv) of this section are, after notice and reasonable opportunity to respond, subject to such sanctions as deemed appropriate by the Commissioner, or the Commissioner's designee, which may include, but are not limited to, any combination of—

(1) Holding certain facts to have been established;

(2) Returning papers;

(3) Precluding a party from filing a paper, or presenting or contesting an issue;

(4) Imposing a monetary sanction;

(5) Requiring a terminal disclaimer for the period of the delay; or

(6) Terminating the proceedings in the Patent and Trademark Office.

(d) Any practitioner violating the provisions of this section may also be subject to disciplinary action. See § 10.23(c)(15).

[Added 50 FR 5175, Feb. 6, 1985, effective Mar. 8, 1985; para. (a) revised, 58 FR 54494, Oct. 22, 1993, effective Nov. 22, 1993; paras. (a) & (b) revised, paras. (c) & (d) added, 62 FR 53131, Oct. 10, 1997, effective Dec. 1, 1997; para. (a) revised, 69 FR 56481, Sept. 21, 2004, effective Oct. 21, 2004]

[3] 35 U.S.C. §133 provides:

35 U.S.C. §133 Time for prosecuting application.

Upon failure of the applicant to prosecute the application within six months after any action therein, of which notice has been given or mailed to the applicant, or within such shorter time, not less than thirty days, as fixed by the Commissioner in such action, the application shall be regarded as abandoned by the parties thereto, unless it be shown to the satisfaction of the Commissioner that such delay was unavoidable.

[4] Therefore, by example, an unavoidable delay in the payment of the Filing Fee might occur if a reply is shipped by the US Postal Service, but due to catastrophic accident, the delivery is not made.

[5] See: *Changes to Patent Practice and Procedure*; *Final Rule Notice*, 62 *Fed. Reg.* at 53158-59 (October 10, 1997), 1203 *Off. Gaz. Pat. Office* at 86-87 (October 21, 1997).

[6] See: In re Application of G, 11 USPQ2d 1378, 1380 (Comm'r Pats. 1989).

And the Petitioner must be diligent in attending to the matter.[7] Failure to do so does not constitute the care required under Pratt, and so cannot satisfy the test for diligence and due care.

(By contrast, unintentional delays are those that do not satisfy the very strict statutory and regulatory requirements of unavoidable delay, and also, by definition, are not intentional.[8]))

Allegations as to
Unintentional Delay

The requirements for relief under the provisions of 37 C.F.R. §1.137(b) are: petition, fee, reply, showing of unintentional delay, and–where appropriate–a terminal disclaimer and fee

It appears that Petitioner has satisfied the requirements of the regulation.

CONCLUSION

The petition under 37 C.F.R. §1.137(b) is **granted**.

The instant application is released to Technology Center 2800 for further processing in due course.

---

[7] See: Diligence in Filing Petitions to Revive and Petitions to Withdraw the Holding of Abandonment, 1124 Off. Gaz. Pat. Office 33 (March 19, 1991). It was and is Petitioner's burden to exercise diligence in seeking either to have the holding of abandonment withdrawn or the application revived. See 1124 Off. Gaz. Pat. Office supra.

[8] Therefore, by example, an unintentional delay in the reply might occur if the reply and transmittal form are to be prepared for shipment by the US Postal Service, but other pressing matters distract one's attention and the mail is not timely deposited for shipment.

While telephone inquiries regarding this decision may be directed to the undersigned at (571) 272-3214, it is noted that all practice before the Office is in writing (see: 37 C.F.R. §1.2[9]) and the proper authority for action on any matter in this regard are the statutes (35 U.S.C.), regulations (37 C.F.R.) and the commentary on policy (MPEP). Therefore, no telephone discussion may be controlling or considered authority for Petitioner's action(s).

John J. Gillon, Jr.
Senior Attorney
Office of Petitions

[9] The regulations at 37 C.F.R. §1.2 provide:
§1.2 Business to be transacted in writing.
All business with the Patent and Trademark Office should be transacted in writing.The personal attendance of applicants or their attorneys or agents at the Patent and Trademark Office is unnecessary. The action of the Patent and Trademark Office will be based exclusively on the written record in the Office. No attention will be paid to any alleged oral promise, stipulation,or understanding in relation to which there is disagreement or doubt.

UNITED STATES PATENT AND TRADEMARK OFFICE

Commissioner for Patents
United States Patent and Trademark Office
P.O. Box 1450
Alexandria, VA 22313-1450
www.uspto.gov

ROYLANCE, ABRAMS, BERDO & GOODMAN, L.L.P.
1300 19TH STREET, N.W.
SUITE 600
WASHINGTON, DC 20036

COPY MAILED

FEB 20 2007

OFFICE OF PETITIONS

In re Application of Crandall et al. Application No. 10/817,707 Filed: April 2, 2004 Title: High Frequency Electronic Ballast with Sine Wave Oscillator	: : : : :	DECISION ON PETITION

This is a decision on the petition under 37 CFR 1.137(b), filed January 12, 2007, to revive the above-identified application.

This above-identified application became abandoned for failure to timely file a reply to a non-final Office Action mailed August 23, 2005. The non-final Office Action set a three (3) month shortened statutory period for reply. No extensions of time were obtained under the provisions of 37 CFR §1.136(a). Accordingly, this application became abandoned on November 24, 2005. A Notice of Abandonment was mailed on April 18, 2006.

This petition is hereby **GRANTED**.

A three (3) month extension of time was requested with the instant petition. However, pursuant to 37 CFR 1.136 (a), an extension of time must be filed prior to the expiration of the maximum extendable period for reply. See In re Application of S., 8 USPQ2d 1630, 1631 (Comm'r Pats. 1988) Petitioner is ineligible for any extensions of time, nor is an extension of time fee required to revive the application. Accordingly, $ 510.00 will be credited to deposit account 18-2220 .

The Office hereby acknowledges the receipt of the amendment submitted with the instant petition.

This application is being forwarded to Technology Center 2800 for further processing.

Telephone inquiries concerning this matter should be directed to the undersigned at (571) 272-3215.

Charlema R. Grant

Charlema R. Grant
Petitions Attorney
Office of Petitions

UNITED STATES PATENT AND TRADEMARK OFFICE

Commissioner for Patents
United States Patent and Trademark Office
P.O. Box 1450
Alexandria, VA 22313-1450
www.uspto.gov

WEI TE CHUNG
FOXCONN INTERNATIONAL, INC.
1650 MEMOREX DRIVE
SANTA CLARA CA 95050

MAILED

MAR 2 3 2009

OFFICE OF PETITIONS

In re Application of	:	
Hu et al.	:	
Application No. 10/817,721	:	DECISION ON PETITION
Filed: April 2, 2004	:	
For: Field Emission Display	:	

This is a decision on the petition, filed January 9, 2006, which is being treated as a petition under 37 CFR 1.8(b), requesting withdrawal of the holding of abandonment in the above-identified application.

The petition is **GRANTED**.

This application was held abandoned for failure to timely respond to the Office action of April 7, 2005, which set a three (3) month shortened statutory period for reply. Accordingly, a reply was due on or before July 7, 2005.

Petitioner states that a timely reply was mailed via certificate of transmission on July 7, 2005, which included the following papers: amendment and drawings. Petitioner has submitted a copy of the previously mailed correspondence, which bears a certificate of transmission, dated July 7, 2005, which would have rendered the reply timely if received. Petitioner has also provided a copy of the sending unit's report confirming transmission.

The file record does not include the originally submitted papers. Failure to receive correspondence which includes a certificate of mailing or certificate of facsimile transmission is addressed in 37 CFR 1.8(b), reproduced below:

> In the event that correspondence is considered timely filed by being mailed or transmitted in accordance with paragraph (a) of this section, but not received in the U.S. Patent and Trademark Office after a reasonable amount of time has elapsed from the time of mailing or transmitting of the correspondence, or after the application is held to be abandoned, or after the proceeding is dismissed, terminated, or decided with prejudice, the correspondence will be considered timely if the party who forwarded such correspondence:

(1) Informs the Office of the previous mailing or transmission of the correspondence promptly after becoming aware that the Office has no evidence of receipt of the correspondence;

(2) Supplies an additional copy of the previously mailed or transmitted correspondence and certificate; and

(3) Includes a statement which attests on a personal knowledge basis or to the satisfaction of the Director to the previous timely mailing or transmission. If the correspondence was sent by facsimile transmission, a copy of the sending unit's report confirming transmission may be used to support this statement.

The petition satisfies the above requirements of 37 CFR 1.8(b). Accordingly, the holding of abandonment for failure to timely file a reply to the Office action of July 7, 2005 is hereby withdrawn and the application restored to pending status.

The copy of the reply received with the petition will be accepted in place of the reply shown to have been mailed (or transmitted by facsimile) on July 7, 2005.

This application is being referred to Technology Center AU 2879 for appropriate action in the normal course of business on the reply received with petition.

Telephone inquiries concerning this decision should be directed to the undersigned at (571) 272-3215.

Charlema Grant
Petitions Attorney
Office of Petitions

UNITED STATES PATENT AND TRADEMARK OFFICE

COMMISSIONER FOR PATENTS
UNITED STATES PATENT AND TRADEMARK OFFICE
P.O. BOX 1450
ALEXANDRIA, VA 22313-1450
www.uspto.gov

JJGJR.: 01-05

Paper No: __

COPY MAILED

JAN 27 2005

OFFICE OF PETITIONS

SENNIGER POWERS
LEAVITT AND ROEDEL
ONE METROPOLITAN SQUARE
16TH FLOOR
ST LOUIS MO 63102

COPY MAILED
CANCELLED
JAN 26 2005
OFFICE OF PETITIONS

In re Application of
Baumer, et al. :
Application No. 10/817,741 : ON PETITION
Filed: 2 April, 2004 :
Attorney Docket No. SP1287 :

This is a decision on the petition under ¶(a) of 37 C.F.R. §1.47, filed on 5 November, 2004.

The petition is **GRANTED**.

BACKGROUND

The record indicates:

- the application was filed on 2 April, 2004, without, *inter alia*, a fully executed oath or declaration; and

- on 21 June, 2004, the Office mailed a Notice to File Missing Parts;

- on 5 November, 2004, Petitioner filed, *inter alia*, the instant petition under 37 C.F.R. §1.47, with fee; an oath/declaration signed by the named inventors–save non-signing inventor John Fannon (Mr. Fannon)–for themselves and on behalf of Mr. Fannon; and, *inter alia*, a narrative within the petition and a separate statement and documents by/from Petitioner James A. Cordek (Reg. No. 31,807) and a co-inventor Craig Baumer (Mr. Baumer), which together represent that the entire application (specification, claims, drawings) was delivered

by mail to Mr. Fannon through his counsel and that Mr. Fannon has nonetheless failed to sign the oath or declaration; and sets forth Mr. Fannon's last known address.

Lastly, Petitioner has submitted a declaration in compliance with 37 C.F.R. §1.63 and §1.64.

This application and papers have been reviewed and found in compliance with 37 C.F.R. §1.47(a).

This application hereby is **ACCORDED status under 37 C.F.R. §1.47(a)**.

As provided under 37 C.F.R. §1.47(a), the Office will forward notice of this application's filing to the non-signing inventor at the address given in the petition.

Notice of the filing of this application also will be published in the Official Gazette.

This file is being released to OIPE for processing as necessary to reflect the instant decision before being released for examination in due course.

Telephone inquiries concerning this decision may be directed to the undersigned at (571) 272-3214.

John J. Gillon, Jr.
Senior Attorney
Office of Petitions

UNITED STATES PATENT AND TRADEMARK OFFICE

COMMISSIONER FOR PATENTS
UNITED STATES PATENT AND TRADEMARK OFFICE
P.O. BOX 1450
ALEXANDRIA, VA 22313-1450
www.uspto.gov

JJGJR.: 01-05

Paper No: __

JOHN FANNON
2400 REMINGTON LANE
ST. LOUIS, MO 63144

COPY MAILED
JAN 27 2005
OFFICE OF PETITIONS

COPY MAILED
CANCELLED
JAN 26 2005
OFFICE OF PETITIONS

In re Application of
Baumer, et al. :
Application No. 10/817,741 : COMMUNICATION
Filed: 2 April, 2004 :
Attorney Docket No. SP1287 :

Dear John Fannon:

You are named as inventor in the above-identified United States patent application, filed under the provisions of 35 U.S.C. §116 (United States Code), and 37 C.F.R. §1.47, ¶a, Rules of Practice in Patent Cases.

Should a patent be granted on the application you will be designated therein as inventor.

As a named inventor you are entitled to inspect any paper in the file wrapper of the application, order copies of all or any part thereof (at a prepaid cost per 37 C.F.R. §1.19) or make your position of record in the application.

Alternatively, you may arrange to do any of the preceding through a registered patent attorney or agent presenting written authorization from you. If you care to join the application, counsel of record (see below) would presumably assist you. Joining in the application would entail the filing of an appropriate oath or declaration by you pursuant to 37 C.F.R. §1.63.

Requests for information regarding your application should be directed to the File Information Unit at (703) 308-2733.

Information regarding how to pay for and order a copy of the application, or a specific paper in the application, should be directed to Certification Division at (703) 308-9726 or toll-free: (800)

972-6382 (outside the Washington D.C. area).

Telephone inquiries concerning this correspondence may be directed to the undersigned at (571) 272-3214.

John J. Gillon, Jr.
Senior Attorney
Office of Petitions

Counsel of Record:
SENNIGER POWERS
LEAVITT AND ROEDEL
ONE METROPOLITAN SQUARE
16TH FLOOR
ST LOUIS MO 63102

UNITED STATES PATENT AND TRADEMARK OFFICE

Commissioner for Patents
United States Patent and Trademark Office
P.O. Box 1450
Alexandria, VA 22313-1450
www.uspto.gov

THORPE NORTH & WESTERN, LLP.
P.O. Box 1219
SANDY UT 84091-1219

COPY MAILED

JUN 30 2009

OFFICE OF PETITIONS

In re Application of
Kirk D. Bradley
Application No. 10/817,743
Filed: April 2, 2004
Attorney Docket No.: **01491-21741.NP**

ON PETITION

This is a decision on the petition filed June 10, 2009 under 37 CFR 1.137(b),[1] to revive the above-identified application.

The petition is **GRANTED**.

This application became abandoned for failure to timely reply to the non-Final Office Action mailed September 29, 2008. A shortened statutory period of three months was set for replying to the non-Final Office Action. No extensions of time having been requested, this application became abandoned December 30, 2008. Accordingly, a Notice of Abandonment was mailed April 6, 2009.

This matter is being referred to Technology Center 1795 for appropriate action on the amendment filed June 10, 2009.

Telephone inquiries concerning this matter should be directed to the undersigned Petitions Attorney at (571) 272-3212.

Patricia Faison-Ball
Senior Petitions Attorney
Office of Petitions

---

[1]Effective December 1, 1997, the provisions of 37 CFR 1.137(b) now provide that where the delay in reply was unintentional, a petition may be filed to revive an abandoned application or a lapsed patent pursuant to 37 CFR 1.137(b). A grantable petition filed under the provisions of 37 CFR 1.137(b) must be accompanied by:

(1) the required reply, unless previously filed. In a nonprovisional application abandoned for failure to prosecute, the required reply may be met by the filing of a continuing application. In a nonprovisional application filed on or after June 8, 1995, and abandoned for failure to prosecute, the required reply may also be met by the filing of a request for continued examination in compliance with § 1.114. In an application or patent, abandoned or lapsed for failure to pay the issue fee or any portion thereof, the required reply must be the payment of the issue fee or any outstanding balance thereof. In an application abandoned for failure to pay the publication fee, the required reply must include payment of the publication fee.

(2) the petition fee as set forth in 37 CFR 1.17(m);

(3) a statement that the entire delay in filing the required reply from the due date for the reply until the filing of a grantable petition pursuant to 37 CFR 1.137(b) was unintentional. The Commissioner may required additional information where there is a question whether the delay was unintentional; and

(4) any terminal disclaimer (and fee as set forth in 37 CFR 1.20(d)) required pursuant to 37 CFR 1.137(c)).

UNITED STATES PATENT AND TRADEMARK OFFICE

Commissioner for Patents
United States Patent and Trademark Office
P.O. Box 1450
Alexandria, VA 22313-1450
www.uspto.gov

ROYLANCE, ABRAMS, BERDO & GOODMAN, L.L.P.
1300 19TH STREET, N.W.
SUITE 600
WASHINGTON, DC 20036

COPY MAILED

MAY 23 2007

OFFICE OF PETITIONS

In re Application of Crandall et al. :
Application No. 10/817,768 : Decision on Petition
Filing Date: April 2, 2004 :
Attorney Docket No. 52820 :

This is a decision on the petition under 37 CFR 1.137(b), filed January 12, 2007, to revive the above-identified application.

The petition is **granted**.

The above-identified application became abandoned for failure to reply in a timely manner to the non-final Office action mailed July 25, 2005, which set a shortened statutory period for reply of three (3) months. An extension of time under the provisions of 37 CFR 1.136(a) was not obtained. Accordingly, the above-identified application became abandoned on October 26, 2005. A Notice of Abandonment was mailed on March 30, 2006.

The instant petition requests revival of the application.

Petitioner has met the requirements to revive the above-identified application pursuant to 37 CFR 1.137(b). Therefore, the petition is granted and the application is revived.

The petition is accompanied by a payment of $510 for an extension of time. Payment for an extension of time is unnecessary when reviving an application. Therefore, the $510 will be credited to petitioner's deposit account.

Technology Center Art Unit 2821 will be informed of the instant decision and the application will be further examined in due course.

Telephone inquiries regarding this communication should be directed to Petitions Attorney Steven Brantley at (571) 272-3203.

Charles Steven Brantley
Senior Petitions Attorney
Office of Petitions

UNITED STATES PATENT AND TRADEMARK OFFICE

COMMISSIONER FOR PATENTS
UNITED STATES PATENT AND TRADEMARK OFFICE
P.O. BOX 1450
ALEXANDRIA, VA 22313-1450
www.uspto.gov

Paper No.

KNOBBE MARTENS OLSON & BEAR LLP
2040 MAIN STREET
FOURTEENTH FLOOR
IRVINE, CA 92614

COPY MAILED
NOV 0 9 2004
OFFICE OF PETITIONS

In re Application of :
Talieh et al. :
Application No. 10/817,784 :
Filed: April 2, 2004 : ON PETITION
Attorney Docket Number: :
ASMNUT.033CP1C1 :

This is a decision on the Petition, filed October 22, 2004, requesting the application be accorded a filing date of April 2, 2004, including 10 sheets of drawings.

The petition is **granted**.

The application was filed on April 2, 2004. However, on September 27, 2004, the Office of Initial Patent Examination mailed a Notice of Incomplete Nonprovisional Application, noting that a filing date had NOT been accorded the application because the application had been deposited without drawings.

In response, Petitioner files the instant petition wherein Petitioner avers that 10 sheets of drawings were originally filed with the application on April 2, 2004, and were received by this Office as evidenced by the return-receipt postcard. In support, Petitioner provides a copy of a return receipt postcard acknowledging receipt of, *inter alia*, 10 sheets of drawings on April 2, 2004.

A review of the return receipt postcard reveals that Petitioner is correct. The postcard acknowledges receipt of 10 sheets of drawings on April 2, 2004. Petitioner has also re-submitted 10 sheets of drawings with the instant petition.

Evidence of receipt of any correspondence filed in the Patent and Trademark Office can be obtained by submitting a self-addressed postcard properly itemizing and identifying the paper or papers being filed. Upon receipt of the correspondence, the Patent and Trademark Office will check the listing on the post card against the papers submitted, making sure that all items listed are present and will then stamp the postcard with an Official date stamp and place the postcard in the outgoing mail. "A postcard receipt which itemizes and properly identifies the papers which are being filed serves as *prima facie* evidence of receipt in the PTO of all items listed thereon by the PTO." MPEP § 503.

The copy of 10 sheets of drawings supplied with the instant petition on October 22, 2004, will be used for examination purposes.

A refund of the petition fee has been credited to deposit account 11-1410 as authorized in the instant petition.

This file is an Image File Wrapper ("IFW), and as such, no forwarding of the file is necessary. An electronic message will be sent to the Office of Initial Patent Examination to continue processing the application as a nonprovisional application with a filing date of April 2, 2004, and an indication that 10 sheets of drawings were present on filing, using the 10 sheets of drawings filed on April 2, 2004.

The Revocation and General Power of Attorney have been entered and made of record.

Telephone inquiries concerning this matter should be directed to the undersigned at (571) 272-3232.

Derek L. Woods
Attorney Advisor
Office of Petitions

UNITED STATES PATENT AND TRADEMARK OFFICE

Commissioner for Patents
United States Patent and Trademark Office
P.O. Box 1450
Alexandria, VA 22313-1450
www.uspto.gov

Paper No.

TERADYNE, INC.
LEGAL DEPARTMENT
321 HARRISON AVENUE
BOSTON, MA 02118

COPY MAILED

NOV 04 2004

OFFICE OF PETITIONS

In re Application of :
Yeong Joo Yoon :
Application No. 10/817,785 :
Filed: September 17, 2004 : ON PETITION
Attorney Docket No.: 1878-US :

This is a decision on the Petition under 37 CFR 1.182, filed September 17, 2004, requesting the above-identified application be accorded as the filing date, the date that drawing Figure 6, filed with the instant petition, is filed. The petition and drawing Figure have been filed under the provisions of 37 CFR 1.8 using a Certificate of Mailing, dated September 13, 2004.

Background

Application papers in the above-identified application were filed on April 2, 2004. On July 27, 2004, the Office of Initial Patent Examination mailed a Notice of Omitted Item(s) in a Nonprovisional Application, informing Applicant that drawing Figure 6 described in the specification appeared to have been omitted from the application.

Petitioner files the instant Petition and drawing Figure 6, and requests as the filing date for this application, the date that the omitted drawing Figures is filed using the Certificate of Mailing date of September 13, 2004.

The Manual of Patent Examining Procedure ("MPEP"), § 601.01(g) states that if an application is filed without all of the drawing figure(s) referred to in the specification, a "Notice of Omitted Item(s)" is mailed indicating that the application has been accorded a filing date, but is lacking some of the figures of drawings described in the specification.

The mailing of a 'Notice of Omitted Item(s)' will permit the applicant to either: (1) promptly establish prior receipt in the USPTO of the drawing(s) at issue (generally by way of date-stamped postcard receipt (MPEP 503)) (by filing a petition under 37 CFR 1.53); (2) promptly submit the omitted drawing(s) in a

nonprovisional application and accept the date such submission as the application filing date (by filing a petition under 37 CFR 1.182); or (3) "accept the application as deposited in the USPTO [and not] respond to the 'Notice of Omitted Item(s)'", thereby constructively accepting the application as deposited with this Office. Amendment of the specification is required . . . to cancel all references to the omitted drawing[s]. . . ." See MPEP 601.01(g).

In this instance, Petitioner elected option (2). However, Petitioner may not rely upon the Certificate of Mailing for purposes of obtaining a filing date. While 37 C.F.R. § 1.8(a) provides for the timely filing of correspondence via mailing or facsimile transmission, 37 CFR § 1.8(a)(2) specifically states that

> [t]he procedure described in paragraph (a)(1) of this section does not apply to , and no benefit will be given to a Certificate of Mailing or Transmission on, the following:
>
> (I) Relative to Patents and Patent Applications-
>
> (A) The filing of a national stage patent application specification and drawing or other correspondence for the purpose of obtaining an application filing date, including a request for continued prosecution application under § 1.53(d);

Accordingly, petitioner may not rely upon the Certificate of Mailing or Transmission to obtain a filing date of September 13, 2004. The date of receipt of the correspondence, September 17, 2004, is the filing date accorded the application. *See*, 37 CFR 1.8(a).

Accordingly, the petition is **GRANTED IN PART**.

The application is being forwarded to the Office of Initial Patent Examination for correction of the filing date to September 17, 2004, including the drawing Figure 6 filed on September 17, 2004, and for the mailing of a corrected filing receipt.

Telephone inquiries concerning this matter should be directed to the undersigned at (571) 272-3232.

Derek L. Woods
Attorney Advisor
Office of Petitions

UNITED STATES PATENT AND TRADEMARK OFFICE

Commissioner for Patents
United States Patent and Trademark Office
P.O. Box 1450
Alexandria, VA 22313-1450
www.uspto.gov

APEX JURIS, PLLC
12360 LAKE CITY WAY NORTHEAST
SUITE 410
SEATTLE, WA 98125

COPY MAILED

SEP 12 2008

OFFICE OF PETITIONS

In re Application of :
Ting-Kuo Lee :
Application No.10/817,788 : ON PETITION
Filed: April 6, 2004 :
Attorney Docket No. 07.49.09.USP :

This is a decision on the petition under the unintentional provisions of 37 CFR 1.137(b), filed June 4, 2008, to revive the above-identified application.

The petition is **GRANTED**.

The application became abandoned for failure to timely file a reply within the meaning of 37 CFR 1.113 to the Final Office action of November 16, 2006. The proposed reply required for consideration of a petition to revive must be a Notice of Appeal (and appeal fee required by 37 CFR 41.20(b)(2), an amendment that *prima facie* places the application in condition for allowance, a Request for Continued Examination and submission (37 CFR 1.114), or the filing of a continuing application under 37 CFR 1.53(b). See MPEP 711.03(c)(III)(A)(2). No extension of time pursuant to the provisions of 37 CFR 1.136(a) was obtained. Accordingly, the date of abandonment of this application is February 17, 2007.

The petition satisfies the requirements of 37 CFR 1.137(b) in that petitioner has supplied (1) the reply in the form of a Request for Continued Examination (RCE) and fee of $405.00, and the submission required by 37 CFR 1.114; (2) the petition fee of $770.00; and (3) a proper statement of unintentional delay.

Telephone inquiries concerning this decision should be directed to JoAnne Burke at (571) 272-4584.

This application is being referred to Technology Center AU 3728 for processing of the RCE and for appropriate action by the Examiner in the normal course of business on the amendment submitted in accordance with 37 CFR 1.114.

Irvin Dingle
Petitions Examiner
Office of Petitions

UNITED STATES PATENT AND TRADEMARK OFFICE

UNITED STATES DEPARTMENT OF COMMERCE
United States Patent and Trademark Office
Address: COMMISSIONER FOR PATENTS
P.O. Box 1450
Alexandria, Virginia 22313-1450
www.uspto.gov

APPLICATION NO.	FILING DATE	FIRST NAMED INVENTOR	ATTORNEY DOCKET NO.	CONFIRMATION NO.
10/817,792	04/06/2004	Hiroshi Kondo	251233US6	3203

22850 7590 02/01/2008
OBLON, SPIVAK, MCCLELLAND MAIER & NEUSTADT, P.C.
1940 DUKE STREET
ALEXANDRIA, VA 22314

EXAMINER
LEE, KWOK W

ART UNIT	PAPER NUMBER
4113	

NOTIFICATION DATE	DELIVERY MODE
02/01/2008	ELECTRONIC

Please find below and/or attached an Office communication concerning this application or proceeding.

The time period for reply, if any, is set in the attached communication.

Notice of the Office communication was sent electronically on above-indicated "Notification Date" to the following e-mail address(es):

patentdocket@oblon.com
oblonpat@oblon.com
jgardner@oblon.com

UNITED STATES PATENT AND TRADEMARK OFFICE

UNITED STATES DEPARTMENT OF COMMERCE
United States Patent and Trademark Office
Address: COMMISSIONER FOR PATENTS
P.O. Box 1450
Alexandria, Virginia 22313-1450
www.uspto.gov

APPLICATION NO.	FILING DATE	FIRST NAMED INVENTOR	ATTORNEY DOCKET NO.	CONFIRMATION NO.
10/817,792	04/06/2004	Hiroshi Kondo	251233US6	3203

EXAMINER
LEE, KWOK W

ART UNIT	PAPER NUMBER
4113	

NOTIFICATION DATE	DELIVERY MODE
02/01/2008	ELECTRONIC

7590 02/01/2008
OBLON, SPIVAK, MCCLELLAND MAIER & NEUSTADT, P.C.
1940 DUKE STREET
ALEXANDRIA, VA 22314

DECISION GRANTING PETITION UNDER 37 CFR 1.138(d)

The declaration of express abandonment is recognized

This is in response to the petition under 37 CFR 1.138(d), requesting for a refund of any previously paid search fee and excess claims fee in the above-identified application.

The petition is granted.

The express abandonment is recognized. Any previously paid search fee and excess claims fee are hereby refunded.

Telephone inquiries should be directed to the Office of Data Management at (571) 272-4200.

Patent Publication Branch
Office of Data Management

Refund Ref:
01/31/2008 0030049947

Credit Card Refund Total: $194.00

Am Exp..: XXXXXXXXXXX1006

FORM PET651G (Rev. 08/07)

Notice of Abandonment	Application No.	Applicant(s)	
	10/817,792	KONDO, HIROSHI	
	Examiner	Art Unit	
	Lee, Kwok	4113	

-- The MAILING DATE of this communication appears on the cover sheet with the correspondence address--

This application is abandoned in view of:

1. ☐ Applicant's failure to timely file a proper reply to the Office letter mailed on _____.
   (a) ☐ A reply was received on _____ (with a Certificate of Mailing or Transmission dated _____), which is after the expiration of the period for reply (including a total extension of time of _____ month(s)) which expired on _____.
   (b) ☐ A proposed reply was received on _____, but it does not constitute a proper reply under 37 CFR 1.113 (a) to the final rejection.
   (A proper reply under 37 CFR 1.113 to a final rejection consists only of: (1) a timely filed amendment which places the application in condition for allowance; (2) a timely filed Notice of Appeal (with appeal fee); or (3) a timely filed Request for Continued Examination (RCE) in compliance with 37 CFR 1.114).
   (c) ☐ A reply was received on _____ but it does not constitute a proper reply, or a bona fide attempt at a proper reply, to the non-final rejection. See 37 CFR 1.85(a) and 1.111. (See explanation in box 7 below).
   (d) ☐ No reply has been received.

2. ☐ Applicant's failure to timely pay the required issue fee and publication fee, if applicable, within the statutory period of three months from the mailing date of the Notice of Allowance (PTOL-85).
   (a) ☐ The issue fee and publication fee, if applicable, was received on _____ (with a Certificate of Mailing or Transmission dated _____), which is after the expiration of the statutory period for payment of the issue fee (and publication fee) set in the Notice of Allowance (PTOL-85).
   (b) ☐ The submitted fee of $_____ is insufficient. A balance of $_____ is due.
   The issue fee required by 37 CFR 1.18 is $_____. The publication fee, if required by 37 CFR 1.18(d), is $_____.
   (c) ☐ The issue fee and publication fee, if applicable, has not been received.

3. ☐ Applicant's failure to timely file corrected drawings as required by, and within the three-month period set in, the Notice of Allowability (PTO-37).
   (a) ☐ Proposed corrected drawings were received on _____ (with a Certificate of Mailing or Transmission dated _____), which is after the expiration of the period for reply.
   (b) ☐ No corrected drawings have been received.

4. ☑ The letter of express abandonment which is signed by the attorney or agent of record, the assignee of the entire interest, or all of the applicants.

5. ☐ The letter of express abandonment which is signed by an attorney or agent (acting in a representative capacity under 37 CFR 1.34(a)) upon the filing of a continuing application.

6. ☐ The decision by the Board of Patent Appeals and Interference rendered on _____ and because the period for seeking court review of the decision has expired and there are no allowed claims.

7. ☐ The reason(s) below:

/Rick Clemons/ □□Administrative Assistant□□Art Unit: 3900

Petitions to revive under 37 CFR 1.137(a) or (b), or requests to withdraw the holding of abandonment under 37 CFR 1.181, should be promptly filed to minimize any negative effects on patent term.

UNITED STATES PATENT AND TRADEMARK OFFICE

UNITED STATES DEPARTMENT OF COMMERCE
United States Patent and Trademark Office
Address: COMMISSIONER FOR PATENTS
P.O. Box 1450
Alexandria, Virginia 22313-1450
www.uspto.gov

OLIFF & BERRIDGE, PLC
P.O. BOX 320850
ALEXANDRIA, VA 22320-4850

Mail Date: 06/18/2010

Applicant	: Shohei Yoshida	: DECISION ON REQUEST FOR
Patent Number	: 7639220	: RECALCULATION of PATENT
Issue Date	: 12/29/2009	: TERM ADJUSTMENT IN VIEW
Application No	: 10/817,806	: OF WYETH AND NOTICE OF INTENT TO
Filed	: 04/06/2004	: ISSUE CERTIFICATE OF CORRECTION
		:

The Request for Recalculation is **GRANTED** to the extent indicated.

The patent term adjustment has been determined to be **1307** days. The USPTO will *sua sponte* issue a certificate of correction reflecting the amount of PTA days determined by the recalculation.

Prior to the issuance of the certificate of correction, the USPTO will afford patentee an opportunity to be heard and request reconsideration. Accordingly, patentee has **one month or thirty (30) days**, whichever is longer, to file a request for reconsideration of this patent term adjustment calculation. See 35 U.S.C. 154(b)(3)(B)(ii) and 37 CFR 1.322(a)(4). No extensions of time will be granted under 37 CFR 1.136.

Patentee should use document code PET.OP if electronically filing a request for reconsideration of this patent term adjustment calculation. The patentee must also include the information required by 37 CFR 1.705(b)(2) and the fee required by 37 CFR 1.18(e). If patentee does not file a timely request for reconsideration of this patent term adjustment calculation including the information required by 37 CFR 1.705(b)(2) and the fee required by 37 CFR 1.18(e), the USPTO will issue a certificate of correction reflecting the PTA determination noted above.

Patentee should be aware that in order to preserve the right to review in the United States District Court for the District of Columbia of the USPTO patent term adjustment determination, patentee must ensure that he or she also take the steps required under 35 U.S.C. 154(b)(4)(A) in a timely manner. Nothing in the request for recalculation should be construed as providing an alternative time frame for commencing a civil action under 35 U.S.C. 154(b)(4)(A).

Any questions concerning this decision should be directed to the Office of Patent Legal Administration at 571-272-7702.

UNITED STATES PATENT AND TRADEMARK OFFICE

Commissioner for Patents
United States Patent and Trademark Office
P.O. Box 1450
Alexandria, VA 22313-1450
www.uspto.gov

COPY MAILED

FEB 0 7 2006

OFFICE OF PETITIONS

**OBLON, SPIVAK, MCCLELLAND, MAIER &
NEUSTADT, P.C.
1940 DUKE STREET
ALEXANDRIA VA 22314**

In re Application of :
Tohru Takahashi et al :
Application No. 10/817,821 : ON PETITION
Filed: April 6, 2004 :
Attorney Docket No. 251162US2SCONT :

This is a decision on the petition, filed February 3, 2006, under 37 CFR 1.313(c)(2) to withdraw the above-identified application from issue after payment of the issue fee.

The petition is **GRANTED**.

The above-identified application is withdrawn from issue for consideration of a submission under 37 CFR 1.114 (request for continued examination). See 37 CFR 1.313(c)(2).

Petitioner is advised that the issue fee paid on October 25, 2005, in the above-identified application cannot be refunded. If, however, the above-identified application is again allowed, petitioner may request that it be applied towards the issue fee required by the new Notice of Allowance.[1]

Telephone inquiries should be directed to the undersigned at (571) 272-3208.

The examiner of Technology Center AU 2879 will consider the request for continued examination under 37 CFR 1.114.

Karen Creasy
Petitions Examiner
Office of Petitions
Office of the Deputy Commissioner
for Patent Examination Policy

---

[1] The request to apply the issue fee to the new Notice may be satisfied by completing and returning the new Issue Fee Transmittal Form PTOL-85(b), which includes the following language thereon: "Commissioner for Patents is requested to apply the Issue Fee and Publication Fee (if any) or re-apply any previously paid issue fee to the application identified above." Petitioner is advised that, whether a fee is indicated as being due or not, the Issue Fee Transmittal Form **must** be completed and timely submitted to avoid abandonment. Note the language in bold text on the first page of the Notice of Allowance and Fee(s) Due (PTOL-85).

10/817825

Sterne Kessler Goldstein Fox
ATTORNEYS AT LAW

OIPE IAP82
NOV 09 2005
PATENT & TRADEMARK OFFICE

Robert Greene Sterne
Edward J. Kessler
Jorge A. Goldstein
David K.S. Cornwell
Robert W. Esmond
Tracy-Gene G. Durkin
Michele A. Cimbala
Michael B. Ray
Robert E. Sokohl
Eric K. Steffe
Michael Q. Lee
Steven R. Ludwig
John M. Covert
Linda E. Alcorn
Robert C. Millonig
Donald J. Featherstone
Timothy J. Shea, Jr
Michael V. Messinger
Judith U. Kim
Patrick E. Garrett
Jeffrey T. Helvey
Heidi L. Kraus
Eldora L. Ellison
Thomas C. Fiala
Albert L. Ferro
Donald R. Banowit
Peter A. Jackman
Jeffrey S. Weaver
Kendrick P. Patterson
Vincent L. Capuano
Brian J. Del Buono
Virgil Lee Beaston
Theodore A. Wood
Elizabeth J. Haanes
Joseph S. Ostroff
Frank R. Cottingham
Rae Lynn P. Guest
Daniel A. Klein
Jason D. Eisenberg
Michael D. Specht
Andrea J. Kamage
Tracy L. Muller
Jon E. Wright
LuAnne M. DeSantis
Ann E. Summerfield
Aric W. Ledford
Helene C. Carlson
Cynthia M. Bouchez
Timothy A. Doyle
Gaby L. Longsworth
Lori A. Gordon
Nicole D. Dretar
Ted J. Ebersole
Laura A. Vogel
Michael J. Mancuso
Bryan S. Wade
Aaron L. Schwartz
Shannon A. Carroll*
Wesley W. Jones*
Matthew E. Kelley*
Michelle K. Holoubek*
Marsha A. Rose*
Registered Patent Agents•
Karen R. Markowicz
Nancy J. Leith
Matthew J. Dowd
Katrina Yujian Pei Quach
Bryan L. Skelton
Robert A. Schwartzman
Teresa A. Colella
Victoria S. Rutherford
Simon J. Elliott
Julie A. Heider
Mita Mukherjee
Scott M. Woodhouse
Christopher J. Walsh
Liliana Di Nola-Baron
Peter A. Socarras
Jeffrey Mills
Of Counsel
Kenneth C. Bass III
Marvin C. Guthrie
*Admitted only in Maryland
• Admitted only in Virginia
•Practice Limited to Federal Agencies

November 9, 2005

WRITER'S DIRECT NUMBER:
(202) 772-8514
INTERNET ADDRESS:
LHORNER@SKGF.COM

Commissioner for Patents
PO Box 1450
Alexandria, VA 22313-1450

Art Unit 1722

Mail Stop COC Branch

OK TO ENTER TWH 12-1-05

Re: U.S. Utility Patent
Patent No. 6,945,768 B2; Issued: September 20, 2005
For: **Gap Seal Between a Nozzle and a Mold Component in an Injection Molding Apparatus**
Inventors: Babin *et al.*
Our Ref: 2107.1650002

Sir:

Transmitted herewith for appropriate action are the following documents:

1. Request for Certificate of Correction Under 37 C.F.R. § 1.322 with copy of Amendment and Reply Under 37 C.F.R. 1.312 dated May 10, 2005;

2. Certificate of Correction Form (PTO/SB/44); and

3. One (1) return postcard.

It is respectfully requested that the attached postcard be stamped with the date of filing of these documents, and that it be returned to our courier. In the event that extensions of time are necessary to prevent abandonment of this patent application, then such extensions of time are hereby petitioned.

Certificate
NOV 14 2005
of Correction

NOV 17 2005

The U.S. Patent and Trademark Office is hereby authorized to charge any fee deficiency, or credit any overpayment, to our Deposit Account No. 19-0036.

Respectfully submitted,

STERNE, KESSLER, GOLDSTEIN & FOX P.L.L.C.

Linda E. Alcorn

Linda E. Alcorn
Attorney for Patentees
Registration No. 39,588

LAH/PAS/shr
Enclosures

SKGF_462617.1

NOV 17 2005

OIPE IAP82
NOV 0 9 2005
PATENT & TRADEMARK OFFICE

IN THE UNITED STATES PATENT AND TRADEMARK OFFICE

In re patent of:	Confirmation No.: 3654
Babin *et al.*	Art Unit: 1722
Patent. No.: 6,945,768 B2	Examiner: Timothy W. Heitbrink
Issued: September 20, 2005	Atty. Docket: 2107.1650002
For: **Gap Seal Between a Nozzle and a Mold Component in an Injection Molding Apparatus**	

Request for Certificate of Correction Under 37 C.F.R. § 1.322

Attn: Certificate of Correction Branch

Commissioner for Patents
PO Box 1450
Alexandria, VA 22313-1450

Sir:

It is hereby requested that a Certificate of Correction under 37 C.F.R. § 1.322 be issued for the above-captioned United States Patent. This Certificate of Correction is being requested due to mistakes which appear in the printed patent. These mistakes were made by the U.S. Patent and Trademark Office.

Specifically, the printed patent contains the following errors for which a Certificate of Correction is respectfully requested:

In Fig. 1 delete the number "20" in the top right corner.

Remarks

The above-noted corrections do not involve such changes in the patent as would constitute new matter or would require reexamination.

NOV 1 7 2005

In support of this request Patentees enclose a copy of the Amendment and Reply Under 37 C.F.R. § 1.312 dated May 10, 2005, in which a substitute Fig. 1 was filed by the Applicants.

A completed Form PTO/SB/44 accompanies this request, with the above-noted corrections printed thereon. Accordingly, a Certificate of Correction is believed proper and issuance thereof is respectfully requested.

The Commissioner is hereby authorized to charge any fee deficiency, or credit any overpayment, to our Deposit Account No. 19-0036.

Respectfully submitted,

STERNE, KESSLER, GOLDSTEIN & FOX P.L.L.C.

Linda E. Alcorn

Linda E. Alcorn
Attorney for Patentees
Registration No. 39,588

Date: Nov. 9, 2005

1100 New York Avenue, N.W.
Washington, D.C. 20005-3934
(202) 371-2600

SKGF_462502.1

NOV 17 2005

OIPE IAP82
NOV 0 9 2005
PATENT & TRADEMARK OFFICE

Applicants:	Babin *et al.*	**Due Date:**	None
		Art Unit:	1722
		Confirmation No.:	3654
Application No.:	10/817,825	**Examiner:**	Timothy W. Heitbrink
Filed:	April 6, 2004	**Docket:**	2107.1650002
For:	**Gap Seal Between a Nozzle and a Mold Component in an Injection Molding Apparatus**	**Atty:**	LEA/PAS

When receipt stamp is placed hereon, the USPTO acknowledges receipt of the following documents:

1. SKGF Cover Letter;
2. Amendment Under 37 C.F.R. § 1.312;
3. Submission of Drawings;
4. A copy of replacement drawing (FIG. 1); and
5. Return postcard..

OIPE JC25
MAY 1 0 2006
PATENT & TRADEMARK OFFICE

Mail Stop: Amendment

Please Date Stamp and Return to Our Courier

DUPLICATE

NOV 1 7 2006

Sterne Kessler Goldstein Fox
ATTORNEYS AT LAW

OIPE IAP82
NOV 0 9 2005
PATENT & TRADEMARK OFFICE

Robert Greene Sterne
Edward J. Kessler
Jorge A. Goldstein
David K.S. Cornwell
Robert W. Esmond
Tracy-Gene G. Durkin
Michele A. Cimbala
Michael B. Ray
Robert E. Sokohl
Eric K. Steffe
Michael Q. Lee
Steven R. Ludwig
John M. Covert
Linda E. Alcorn
Robert C. Millonig
Donald J. Featherstone
Timothy J. Shea, Jr
Lawrence B. Bugaisky
Michael V. Messinger
Judith U. Kim
Patrick E. Garrett
Jeffrey T. Helvey
Heidi L. Kraus
Eldora L. Ellison
Thomas C. Fiala
Albert L. Ferro*
Donald R. Banowit
Peter A. Jackman
Teresa U. Medler
Jeffrey S. Weaver
Kendrick P. Patterson
Vincent L. Capuano
Brian J. Del Buono
Virgil Lee Beaston
Theodore A. Wood
Elizabeth J. Haanes
Joseph S. Ostroff
Frank R. Cottingham
Christine M. Lhulier
Rae Lynn P. Guest
George S. Bardmesser
Daniel A. Klein
Jason D. Eisenberg
Michael D. Specht
Andrea J. Kamage
Tracy L. Muller
Jon E. Wright
LuAnne M. DeSantis
Ann E. Summerfield
Aric W. Ledford
Helene C. Carlson
Cynthia M. Bouchez
Timothy A. Doyle*
Gaby L. Longsworth
Lori A. Gordon
Nicole D. Dretar
Ted J. Ebersole
Jyoti C. Iyer
Laura A. Vogel
Michael J. Mancuso
Bryan S. Wade
Aaron L. Schwartz
Michael G. Penn*
Shannon A. Carroll*
Wesley W. Jones*
Matthew E. Kelley*
Nicole R. Kramer*
Registered Patent Agents•
Karen R. Martowicz
Nancy J. Leith
Matthew J. Dowd
Katrina Yujian Pei Quach
Bryan L. Skelton
Robert A. Schwartzman
Teresa A. Colella
Jeffrey S. Lundgren
Victoria S. Rutherford
Michelle K. Holoubek
Simon J. Elliott
Julie A. Helder
Mita Mukherjee
Scott M. Woodhouse
Christopher J. Walsh
Liliana Di Nola-Baron
Peter A. Socarras
Jeffrey Mills
Of Counsel
Kenneth C. Bass III
Evan R. Smith
Marvin C. Guthrie
*Admitted only in Maryland
*Admitted only in Virginia
•Practice Limited to Federal Agencies

May 10, 2005

WRITER'S DIRECT NUMBER:
(202) 772-8514
INTERNET ADDRESS:
LALCORN@SKGF.COM

Commissioner for Patents
PO Box 1450
Alexandria, VA 22313-1450

Art Unit 1722
Mail Stop: Amendment

Re: U.S. Utility Patent Application
Application No. 10/817,825; Filed: April 6, 2004
For: **Gap Seal Between a Nozzle and a Mold Component in an Injection Molding Apparatus**
Inventors: Babin *et al.*
Our Ref: 2107.1650002

Sir:

Transmitted herewith for appropriate action are the following documents:

1. Amendment Under 37 C.F.R. § 1.312;
2. Submission of Drawings;
3. A copy of replacement drawing (FIG. 1); and
4. Return postcard.

It is respectfully requested that the attached postcard be stamped with the date of filing of these documents, and that it be returned to our courier. In the event that extensions of time are necessary to prevent abandonment of this patent application, then such extensions of time are hereby petitioned.

DUPLICATE

NOV 17 2005

The U.S. Patent and Trademark Office is hereby authorized to charge any fee deficiency, or credit any overpayment, to our Deposit Account No. 19-0036.

Respectfully submitted,

STERNE, KESSLER, GOLDSTEIN & FOX P.L.L.C.

Linda E. Alcorn

Linda E. Alcorn
Attorney for Applicants
Registration No. 39,588

LEA/PAS/hmb
Enclosures

396591

DUPLICATE

OIPE IAP82
NOV 0 9 2005
PATENT & TRADEMARK OFFICE

IN THE UNITED STATES PATENT AND TRADEMARK OFFICE

In re application of:
Babin *et al.*
Appl. No.: 10/817,825
Filed: April 6, 2004
For: **Gap Seal Between a Nozzle and a Mold Component in an Injection Molding Apparatus**

Confirmation No.: 3654
Art Unit: 1722
Examiner: Timothy W. Heitbrink
Atty. Docket: 2107.1650002

Amendment Under 37 C.F.R. § 1.312

Mail Stop Amendment

Commissioner for Patents
PO Box 1450
Alexandria, VA 22313-1450

Sir:

Submitted herein is an Amendment Under 37 C.F.R. § 1.312. As payment of the issue fee has not yet been made, Applicants respectfully submit that filing under 37 C.F.R. § 1.312 is proper. (M.P.E.P. § 714.16.)

It is believed that extensions of time are not required beyond those that may otherwise be provided for in documents accompanying this Amendment. However, if additional extensions of time are necessary to prevent abandonment of this application, then such extensions of time are hereby petitioned under 37 C.F.R. § 1.136(a), and any fees required therefor are hereby authorized to be charged to our Deposit Account No. 19-0036.

This Amendment is provided in the following format:

(A) Each section begins on a separate sheet;

DUPLICATE

NOV 1 7 2005

NOV 1 7 2005

(B) Starting on a separate sheet, the Remarks to Amended Drawings explains in detail the changes made in the enclosed Replacement Sheet, in accordance with 37 C.F.R. § 1.121.;

(C) Starting on a separate sheet, the Conclusion.

DUPLICATE

NOV 17 2005

Remarks to Amended Drawings

Figure 1 has been amended to remove an inadvertently placed label "20." Label "20" should only point to the alignment piece, as described in paragraph 43 of the specification.

DUPLICATE

NOV 17 2006

Conclusion

The enclosed Amendment does not add new matter.

Reconsideration of this application and entry of the enclosed Amendment are respectfully requested.

Respectfully submitted,

STERNE, KESSLER, GOLDSTEIN & FOX P.L.L.C.

Linda E. Alcorn

Linda E. Alcorn
Attorney for Applicants
Registration No. 39,588

Date: May 10, 2005

1100 New York Avenue, N.W.
Washington, D.C. 20005-3934
(202) 371-2600
396907

DUPLICATE

NOV 17 2005

OIPE IAP82
NOV 0 9 2005
PATENT & TRADEMARK OFFICE

IN THE UNITED STATES PATENT AND TRADEMARK OFFICE

In re application of:
Babin *et al.*
Appl. No.: 10/817,825
Filed: April 6, 2004
For: **Gap Seal Between a Nozzle and a Mold Component in an Injection Molding Apparatus**

Confirmation No.: 3654
Art Unit: 1722
Examiner: Timothy W. Heitbrink
Atty. Docket: 2107.1650002

Submission of Drawings

Mail Stop Amendment

Commissioner for Patents
PO Box 1450
Alexandria, VA 22313-1450

Sir:

Submitted herewith is one sheet of Replacement drawings with Figure 1, corresponding to the above-captioned application. Identification of the drawing is provided in accordance with 37 C.F.R. § 1.84(c). Acknowledgment of the receipt, approval, and entry of the drawing into this application is respectfully requested.

It is not believed that an extension of time is required, other than any already provided herewith. However, if an extension of time is needed to prevent abandonment of the application, then such extension of time is hereby petitioned. The U.S. Patent and Trademark Office is hereby authorized to charge any fee deficiency, or credit any overpayment, to our Deposit Account No. 19-0036.

Respectfully submitted,

STERNE, KESSLER, GOLDSTEIN & FOX P.L.L.C.

Linda E. Alcorn

Linda E. Alcorn
Attorney for Applicants
Registration No. 39,588

Date: May 10, 2005

1100 New York Avenue, N.W.
Washington, D.C. 20005-3934
(202) 371-2600

396624

DUPLICATE

NOV 1 7 2005

Replacement Sheet
Sheet 1 of 1
Appl. No. 10/817,825; Filed: Apr 6, 2004
Dkt No. 2107.1650002; Group Art Unit: 1746
Inventors: Babin et al.
Tel. No.: 202-371-2600
For: Gap Seal Between a Nozzle and a Mold Component in an Injection Molding Apparatus

OIPE IAP82
NOV 0 9 2005
PATENT & TRADEMARK OFFICE

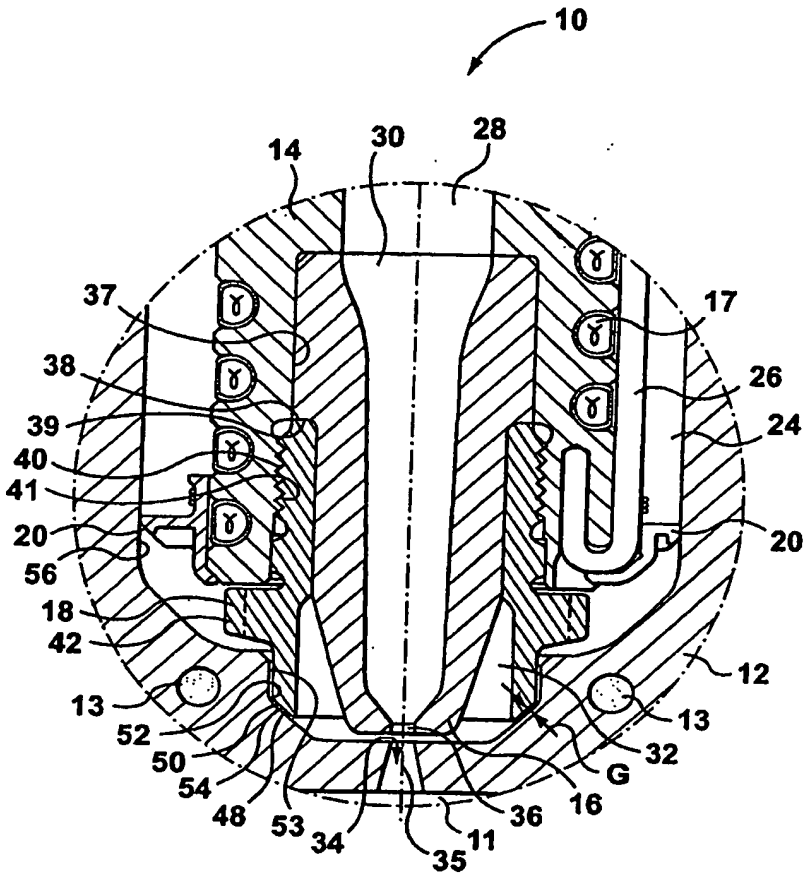

FIG. 1

DUPLICATE

NOV 1 7 2005

PTO/SB/44 (04-05)
Approved for use through 04/30/2007. OMB 0651-0033
U.S. Patent and Trademark Office: U.S. DEPARTMENT OF COMMERCE
Under the Paperwork Reduction Act of 1995, no persons are required to respond to a collection of information unless it displays a valid OMB control number
(Also Form PTO-1050)

UNITED STATES PATENT AND TRADEMARK OFFICE
CERTIFICATE OF CORRECTION

PATENT NO: 6,945,768 B2

DATED: September 20, 2005

INVENTOR(S): Babin *et al.*

It is certified that error appears or errors appear in the above-identified patent and that said Letters Patent is hereby corrected as shown below.

In Fig. 1 delete the number "20" in the top right corner.

SKGF_482539.1

MAILING ADDRESS OF SENDER (Please do not use customer number below):

1100 New York Avenue, NW
Washington DC 20005-3934
Atty. Dkt. No. 2107.1650002

This collection of information is required by 37 CFR 1.322, 1.323 and 1.324. The information is required to obtain or retain a benefit by the public which is to file (and by the USPTO to process) an application. Confidentiality is governed by 35 U.S.C. 122 and 37 CFR 1.14. This collection is estimated to take 1.0 hour to complete, including gathering, preparing, and submitting the completed application form to the USPTO. Time will vary depending upon the individual case. Any comments on the amount of time you are required to complete this form and/or suggestions for reducing this burden, should be sent to the Chief Information Officer, U.S. Patent and Trademark Office, U.S. Department of Commerce, P.O. Box 1450, Alexandria, VA 22313-1450. DO NOT SEND FEES OR COMPLETED FORMS TO THIS ADDRESS. **SEND TO: Attention Certificate of Corrections Branch, Commissioner for Patents, P.O. Box 1450, Alexandria, VA 22313-1450.**

If you need assistance in completing the form, call 1-800-PTO-9199 (1-800-786-9199) and select option 2.

NOV 17 2005

UNITED STATES PATENT AND TRADEMARK OFFICE

Commissioner for Patents
United States Patent and Trademark Office
P.O. Box 1450
Alexandria, VA 22313-1450
www.uspto.gov

RADER FISHMAN & GRAUER PLLC
LION BUILDING
1233 20TH STREET, N.W,
SUITE 501
WASHINGTON, DC 20036

COPY MAILED

MAR 28 2007

OFFICE OF PETITIONS

In re Application of	:
Takeshi Nishimura et al	:
Application No. 10/817,853	: DECISION GRANTING PETITION
Filed: April 6, 2004	: UNDER 37 CFR 1.313(c)(2)
Attorney Docket No. OHT-0023	:

This is a decision on the petition, filed March 27, 2007, under 37 CFR 1.313(c)(2) to withdraw the above-identified application from issue after payment of the issue fee.

The petition is **GRANTED**.

The above-identified application is withdrawn from issue for consideration of a submission under 37 CFR 1.114 (request for continued examination). See 37 CFR 1.313(c)(2).

Petitioner is advised that the issue fee paid on December 27, 2006 in the above-identified application cannot be refunded. If, however, the above-identified application is again allowed, petitioner may request that it be applied towards the issue fee required by the new Notice of Allowance.[1]

Telephone inquiries should be directed to the undersigned at (571) 272-3218.

This matter is being referred to Technology Center AU 2832 for processing of the request for continued examination under 37 CFR 1.114 and for consideration of the Information Disclosure Statement.

Frances Hicks
Petitions Examiner
Office of Petitions

C:\Documents and Settings\FHicks\My Documents\470\Mar10\817853.wpd

---

[1] *The request to apply the issue fee to the new Notice may be satisfied by completing and returning the new Part B – Fee(s) Transmittal Form (along with any balance due at the time of submission). Petitioner is advised that the Issue Fee Transmittal Form must be completed and timely submitted to avoid abandonment.*

UNITED STATES PATENT AND TRADEMARK OFFICE

Commissioner for Patents
United States Patent and Trademark Office
P.O. Box 1450
Alexandria, VA 22313-1450
www.uspto.gov

MATTINGLY, STANGER, MALUR &
BRUNDIDGE, P.C.
1800 Diagonal Road
Suite 370
Alexandria, VA 22314

MAILED

DEC 16 2005

TECHNOLOGY CENTER 2100

In re Application of:
Kenichi SOEJIMA
Application No. 10/817,862
Filed: April 6, 2004
For: INFORMATION PROCESSING SYSTEM, INFORMATION PROCESSING APPARATUS, AND CONTROL METHOD FOR INFORMATION PROCESSING SYSTEM

DECISION ON PETITION TO MAKE SPECIAL

This is a decision on the petitions, filed on July 25, 2005 under 37 C.F.R. §102(d) and M.P.E.P. § 708.02(VIII): Accelerated Examination, to make the above-identified application special.

The petition is **GRANTED**.

M.P.E.P. § 708.02, Section VIII which sets out the prerequisites for a grantable petition for Accelerated Examination under 37 C.F.R. § 102(d) states in relevant part:

> A new application (one which has not received any examination by the examiner) may be granted special status provided that applicant (and this term includes applicant's attorney or agent) complies with each of the following items:
>
> (A) Submits a petition to make special accompanied by the fee set forth in 37 CFR 1.17(h);
>
> (B) Presents all claims directed to a single invention, or if the Office determines that all the claims presented are not obviously directed to a single invention, will make an election without traverse as a prerequisite to the grant of special status;
>
> (C) Submits a statement(s) that a pre-examination search was made, listing the field of search by class and subclass, publication, Chemical Abstracts, foreign patents, etc. A search made by a foreign patent office satisfies this requirement;
>
> (D) Submits one copy each of the references deemed most closely related to the subject matter encompassed by the claims if said references are not already of record; and

(E) Submits a detailed discussion of the references, which discussion points out, with the particularity required by 37 CFR 1.111 (b) and (c), how the claimed subject matter is patentable over the references.

Applicant's submission of July 25, 2005 meets all the criteria set out above. Accordingly, the petition is **GRANTED**. The application file is being forwarded to the Examiner for accelerated examination in accordance with M.P.E.P. § 708.02. If the application is subsequently allowed, it will be given priority for printing. See M.P.E.P. § 1309.

Vincent N. Trans
Special Program Examiner
Technology Center 2100
Computer Architecture, Software, and
Information Security
571-272-3613

UNITED STATES PATENT AND TRADEMARK OFFICE

COMMISSIONER FOR PATENTS
UNITED STATES PATENT AND TRADEMARK OFFICE
P.O. BOX 1450
ALEXANDRIA, VA 22313-1450
www.uspto.gov

FOLEY & LARDNER
321 NORTH CLARK STREET
SUITE 2800
CHICAGO IL 60610-4764

MAILED

MAY 12 2005

DIRECTOR'S OFFICE
TECHNOLOGY CENTER 2600

In re Application of
MAS, FRANCISCO ROVIRA, et al
Serial No.: 10/817,900
Filed: April 6, 2004
For: **SYSTEM AND METHOD FOR DETECTING CROP ROWS IN AN AGRICULTURAL FIELD:**

DECISION ON PETITION
ACCEPTANCE OF COLOR DRAWINGS

This is a decision on the petition under 37 C.F.R. § 1.84(a)(2), filed, October 18, 2004, requesting acceptance of color drawings.

The petition requests that the color drawings identified in figures 3, 21A-C, 22A-C 24a-g, 25a-f, 26a-f, 27a-g, 28a-g, and 29a-f, be accepted in lieu of black and white drawings.

A grantable petition under 37 C.F.R. §1.84(a)(2) must be accompanied by a fee set forth under 37 C.F.R. § 1.17(h), 3 (three) set of the color drawings in question, and the specification must contain, or be amended to contain, the following language as the first paragraph in that portion of the specification relating to the brief description of the drawings:

"The file of this patent contains at least one drawing executed in color. Copies of this patent with color drawing(s) will be provided by the Patent and Trademark Office upon request and payment of the necessary fee."

The petition is **GRANTED**.

Dwayne Bost
Special Program Examiner
Technology Center 2600
Communications

UNITED STATES PATENT AND TRADEMARK OFFICE

Commissioner for Patents
United States Patent and Trademark Office
P.O. Box 1450
Alexandria, VA 22313-1450
www.uspto.gov

PRICE & ADAMS PC
4135 BROWNSVILLE ROAD
PO BOX 98127
PITTSBURGH PA 15227-0127

COPY MAILED

MAR 0 5 2007

OFFICE OF PETITIONS

In re Application of		
Ross, et al.	:	
Application No. 10/817,928	:	DECISION ON
Filed: April 6, 2004	:	PETITION
Attorney Docket No. FLS 9011	:	

This is in response to the petition to withdraw the holding of abandonment under 37 CFR 1.181, filed December 27, 2006.

The petition under 37 CFR 1.181 is **GRANTED**.

The holding of abandonment is **WITHDRAWN**.

The above-identified application was held abandoned for failure to timely file a reply to the non-final Office action mailed June 14, 2006. No response having been received, the above-identified application became abandoned on September 15, 2006. The mailing of this decision precedes the mailing of a Notice of Abandonment.

Petitioner has supplied a copy of an Amendment, bearing a Certificate of Mailing under 37 CFR 1.8 dated September 13, 2006.

In view of the above, the holding of abandonment is withdrawn.

Given the basis for granting this petition, no petition fee was required.

The application file is being forwarded to Group Art Unit 2854 for consideration of the Amendment (Certificate of Mailing dated September 13, 2006), a copy of which has been supplied with the instant petition.

Telephone inquiries related to this decision should be directed to the undersigned at 571-272-3207.

Cliff Congo
Petitions Attorney
Office of Petitions

UNITED STATES PATENT AND TRADEMARK OFFICE

Commissioner for Patents
United States Patent and Trademark Office
P.O. Box 1450
Alexandria, VA 22313-1450
www.uspto.gov

JOSEPH J. LAKS
THOMSON LICENSING LLC
2 INDEPENDENCE WAY, PATENT OPERATIONS
PO BOX 5312
PRINCETON, NJ 08543

COPY MAILED

JUN 19 2008

OFFICE OF PETITIONS

In re Application of	:	
Keping CHEN, et al	:	
Application No. 10/817,983	:	DECISION ON PETITION
Filed: April 5, 2004	:	
Attorney Docket No. PU030104	:	

This is a decision on the petition under the unintentional provisions of 37 CFR 1.137(b), filed April 3, 2008, to revive the above-identified application.

The petition is **GRANTED**.

This application became abandoned for failure to timely file a reply within the meaning of 37 CFR 1.113 to the final Office action of August 8, 2007. The proposed reply required for consideration of a petition to revive must be a Notice of Appeal (and appeal fee required by 37 CFR 41.20(b)(2)), an amendment that *prima facie* places the application in condition for allowance, a Request for Continued Examination (RCE) and submission (37 CFR 1.114), or the filing of a continuing application under 37 CFR 1.53(b). See MPEP 711.03(c)(II)(A)(2). No extensions of time pursuant to the provisions of 37 CFR 1.136(a) were obtained. Accordingly, the date of abandonment of this application is November 9, 2007.

The petition satisfies the requirements of 37 CFR 1.137(b) in that petitioner has supplied (1) the reply in the form of a Notice of Appeal; (2) the petition fee of $1540; and (3) a proper statement of unintentional delay.

An extension of time under 37 CFR 1.136 must be filed prior to the expiration of the maximum extendable period for reply. *See* In re Application of S., 8 USPQ2d 1630, 1631 (Comm'r Pats. 1988). Since the extension of time was not filed prior to the maximum extendable period for

reply, the $120 extension of time fee submitted with the petition on April 3, 2003 is unnecessary and will be credited to petitioner's deposit account.

Telephone inquiries concerning this decision should be directed to Diane Goodwyn at (571) 272-6735.

This application is being referred to Technology Center AU 2624 to await processing of the Appeal Brief.

Thurman Page
Petitions Examiner
Office of Petitions

UNITED STATES PATENT AND TRADEMARK OFFICE

Commissioner for Patents
United States Patent and Trademark Office
P.O. Box 1450
Alexandria, VA 22313-1450
www.uspto.gov

ORUM & ROTH
53 W. JACKSON BLVD
CHICAGO IL 60604

COPY MAILED
SEP 15 2008

In re Application of	:	
Ilch et al.	:	
Application No. 10/817990	:	
Filing or 371(c) Date: 04/05/2004	:	
Attorney Docket Number:	:	
13808	:	ON PETITION

This is a decision on the "Petition to Withdraw Holding of Abandonment, filed July 28, 2008. The petition is properly treated Under 37 C.F.R. § 1.181

This Petition is hereby **granted**.

The above-identified application became abandoned for failure to timely and properly reply to the non-final Office action, mailed October 18, 2007. The Office action set a three (3) month period for reply, and provided for extensions of time under 37 CFR 1.136(a). No response having been received, the application became abandoned on January 19, 2008. A Notice of Abandonment was mailed May 1, 2008.

Applicant's Assertion

Applicant files the instant petition and asserts that a timely reply to the Office action was filed, including a three (3) month extension of time and fee, on April 21, 2008. In support of this assertion applicant files a copy of his return-receipt postcard which acknowledges receipt by this Office of a Reply to OA and Ext. of Time on April 21, 2008.

Office records

A review of Office records reveals that the Office received an amendment, and a three (3) month extension of time fee on April 21, 2008.

Conclusion

In view of the foregoing, the petition is granted. The holding of abandonment is hereby withdrawn.

The application will be referred to Technology Center Art Unit 3643 for processing of the Amendment, and for continued examination in due course.

Telephone inquiries concerning this matter should be directed to the undersigned at (571) 272-3232.

/Derek L. Woods/
Derek L. Woods
Attorney
Office of Petitions

UNITED STATES PATENT AND TRADEMARK OFFICE

Commissioner for Patents
United States Patent and Trademark Office
P.O. Box 1450
Alexandria, VA 22313-1450
www.uspto.gov

STEPHEN R. LOE
THE LAW OFFICE OF STEPHEN R. LOE
P.O. BOX 649
FRISCOE, TX 75034

COPY MAILED

MAR 1 1 2005

OFFICE OF PETITIONS

In re Application of
Kasravi et al.
Application No. 10/818,008
Filed: April 5, 2004
Attorney Docket No. LEDS.00106
For: A System and Method for Quantitative Assessment of Organizational Adaptability

DECISION REFUSING TO ACCORD STATUS UNDER 37 CFR 1.47(a)

This is a decision on the petition under 37 CFR 1.47(a), filed October 25, 2004.

The petition is **DISMISSED**.

Any request for reconsideration of this decision must be submitted within TWO (2) MONTHS from the mail date of this decision. Extensions of time under 37 CFR 1.136(a) are permitted. Any response should be entitled "Request for Reconsideration of Petition Under 37 CFR 1.47(a)" and may include an oath or declaration executed by the current non-signing inventor(s). **Failure to respond will result in abandonment of the application.**

A grantable petition under 37 CFR 1.47(a) requires

(1) proof that the non-signing inventor cannot be found or reached after diligent effort or that the inventor refuses to sign after having been presented with the application papers (specification, claims, and drawings),
(2) a proper oath or Declaration executed by the available joint inventor(s),
(3) the fee of $200 as specified in 37 CFR 1.17(g), and
(4) the last known address of the omitted inventor(s).

The instant petition fails to satisfy (1). The petition states a letter was sent to the last known address for the non-signing inventor. The letter was returned unclaimed. The petition fails to state the last time the address was currently used or to give any indication that the address is a current and accurate address. The petition fails to establish that any diligent effort was made to find and locate the inventor upon learning she no longer resided at the old address. Therefore, the petition cannot be granted. Any request for reconsideration must be accompanied by a showing of diligent effort to locate an inventor. For example, one could use directory assistance or perform an internet search.

The following information is for petitioner's benefit only and merely provided as a courtesy. The Office does not verify that the information is correct nor does the information, if inaccurate, release petitioner from the obligation to exercise diligent effort to find the nonsigning inventor. An internet search indicates that a Donna Stemmer who previously lived at the old address provided in the old petition, may not live at 5400 Legacy Drive, Plano, TX 75024.

Further correspondence with respect to this matter should be addressed as follows:

By mail: Mail Stop Petition
Commissioner for Patents
P.O. Box 1450
Alexandria, VA 22313-1450

By facsimile: (703) 872-9306
Attn: Office of Petitions

By hand: U.S. Patent and Trademark Office
Customer Service Window
Randolph Building
401 Dulany Street
Alexandria, VA 22314

If a request for reconsideration is filed, and a decision on the new petition is not received within three months, petitioner may wish to call the number below to check on the status of the renewed petition.

Telephone inquiries concerning the instant decision should be directed to Petitions Attorney Steven Brantley at (571) 272-3203.

Charles Steven Brantley
Petitions Attorney
Office of Petitions

UNITED STATES PATENT AND TRADEMARK OFFICE

Commissioner for Patents
United States Patent and Trademark Office
P.O. Box 1450
Alexandria, VA 22313-1450
www.uspto.gov

COPY MAILED

AUG 1 8 2005

OFFICE OF PETITIONS

STEPHEN R. LOE
THE LAW OFFICE OF STEPHEN R. LOE
P.O. BOX 649
FRISCOE, TX 75034

In re Application of Kasravi et al. Application No. 10/818,008 Filed: April 5, 2004 Attorney Docket No. LEDS.00106	: : : : :	Decision Noting Joinder of Inventor and Decision Dismissing Any Request for Status Under 37 CFR 1.47 as Moot

Papers filed on June 3, 2005, in response to a Decision refusing to accord status under 37 CFR 1.47(a) mailed on March 11, 2005, include a Declaration signed by the previously non-signing inventor in compliance with 37 CFR 1.63.

In view of the joinder of the inventor, further consideration under Rule 1.47(a) is moot; this application does not have any Rule 1.47 status and no such status should appear on the file wrapper. This application need not be returned to this Office for any further consideration under Rule 1.47(a).

For the above reasons, the petition is **dismissed as moot**.

Petitioner's deposit account was incorrectly charged $200 on June 6, 2005. The $200 will be credited back to the deposit account.

The Office of Initial Patent Examination will be informed of the instant decision so that it may continue preparing the application for examination.

Telephone inquiries concerning this decision should be directed to Petitions Attorney Steven Brantley at (571) 272-3203.

Charles Steven Brantley
Petitions Attorney
Office of Petitions

UNITED STATES PATENT AND TRADEMARK OFFICE

Commissioner for Patents
United States Patent and Trademark Office
P.O. Box 1450
Alexandria, VA 22313-1450
www.uspto.gov

WESTMAN CHAMPLIN & KELLY
SUITE 1400 - INTERNATIONAL CENTRE
900 SECOND AVENUE SOUTH
MINNEAPOLIS MN 55402-3319

COPY MAILED

JAN 27 2006

OFFICE OF PETITIONS

In re Application of :
Jeffry Duane Foster :
Application No. 10/818,015 :
Filed: April 5, 2004 :
Attorney Docket No. R11.12-0809 :

ON PETITION

This is a decision on the petition, filed January 17, 2006, and supplemented on January 26, 2006, under 37 CFR 1.313(c)(2) to withdraw the above-identified application from issue after payment of the issue fee.

The petition is **GRANTED**.

The above-identified application is withdrawn from issue for consideration of a submission under 37 CFR 1.114 (request for continued examination). See 37 CFR 1.313(c)(2).

Petitioner is advised that the issue fee paid on November 10, 2005, in the above-identified application cannot be refunded. If, however, the above-identified application is again allowed, petitioner may request that it be applied towards the issue fee required by the new Notice of Allowance.[1]

Telephone inquiries should be directed to the undersigned at (571) 272-3208.

The examiner of Technology Center AU 2855 will consider the request for continued examination under 37 CFR 1.114.

Karen Creasy
Petitions Examiner
Office of Petitions
Office of the Deputy Commissioner
for Patent Examination Policy

---

[1] The request to apply the issue fee to the new Notice may be satisfied by completing and returning the new Issue Fee Transmittal Form PTOL-85(b), which includes the following language thereon: "Commissioner for Patents is requested to apply the Issue Fee and Publication Fee (if any) or re-apply any previously paid issue fee to the application identified above." Petitioner is advised that, whether a fee is indicated as being due or not, the Issue Fee Transmittal Form **must** be completed and timely submitted to avoid abandonment. Note the language in bold text on the first page of the Notice of Allowance and Fee(s) Due (PTOL-85).

UNITED STATES PATENT AND TRADEMARK OFFICE

COMMISSIONER FOR PATENTS
UNITED STATES PATENT AND TRADEMARK OFFICE
P.O. BOX 1450
ALEXANDRIA, VA 22313-1450
www.uspto.gov

Paper No. _____

Date : January 27, 2006

TO : Director, Office of Patent Publication

FROM : Office of the Deputy Commissioner
for Patent Examination Policy

SUBJECT : Withdrawal from Issue of

Applicant(s) :Jeffry Duane Foster
Application No. :10/818,015
Filed :April 5, 2004

The above-identified application has been assigned Patent No. 6,990,869 and an issue date of January 31, 2006.

It is hereby directed that this application be withdrawn from issue at the request of the applicant.

Do not refund the issue fee.

The following erratum should be published in the Official Gazette if the above-identified application is published in the OG of January 31, 2006:

"All reference to Patent No. 6,990,869 to Jeffry Duane Foster of Minnesota for SCALABLE AVERAGING INSERTION VORTEX FLOW METER appearing in the Official Gazette of January 31, 2006 should be deleted since no patent was granted."

Karen Creasy

Karen Creasy
Petitions Examiner
Office of Petitions
Office of the Deputy Commissioner
for Patent Examination Policy

cc: Paul Harrison, MDW-4B03,(FAX-273-5468)
Deneise Boyd, MDE-3D39 (FAX-273-5124)
Mary Louise McAskill, ST-8C15 (FAX 305-4372)
Niomi Farmer, ST-8C14 (FAX-305-4372)
Mary E. Johnson (Cookie), MDE-7C71 (FAX 273-0038
Duane Davis P/OPC MDE-7D89
Tamara Greene, ST-8C13

UNITED STATES PATENT AND TRADEMARK OFFICE

UNITED STATES DEPARTMENT OF COMMERCE
United States Patent and Trademark Office
Address: COMMISSIONER FOR PATENTS
P.O. Box 1450
Alexandria, Virginia 22313-1450
www.uspto.gov

Tyco Healthcare Group LP
60 MIDDLETOWN AVENUE
NORTH HAVEN, CT 06473

Mail Date: 04/21/2010

Applicant	: Claude A. Vidal	: DECISION ON REQUEST FOR
Patent Number	: 7658312	: RECALCULATION of PATENT
Issue Date	: 02/09/2010	: TERM ADJUSTMENT IN VIEW
Appliction No	: 10/818,040	: OF WYETH AND NOTICE OF INTENT TO
Filed	: 04/05/2004	: ISSUE CERTIFICATE OF CORRECTION
		:

The Request for Recalculation is **GRANTED** to the extent indicated.

The patent term adjustment has been determined to be **1034** days. The USPTO will *sua sponte* issue a certificate of correction reflecting the amount of PTA days determined by the recalculation.

Prior to the issuance of the certificate of correction, the USPTO will afford patentee an opportunity to be heard and request reconsideration. Accordingly, patentee has **one month or thirty (30) days**, whichever is longer, to file a request for reconsideration of this patent term adjustment calculation. See 35 U.S.C. 154(b)(3)(B)(ii) and 37 CFR 1.322(a)(4). No extensions of time will be granted under 37 CFR 1.136.

Patentee should use document code PET.OP if electronically filing a request for reconsideration of this patent term adjustment calculation. The patentee must also include the information required by 37 CFR 1.705(b)(2) and the fee required by 37 CFR 1.18(e). If patentee does not file a timely request for reconsideration of this patent term adjustment calculation including the information required by 37 CFR 1.705(b)(2) and the fee required by 37 CFR 1.18(e), the USPTO will issue a certificate of correction reflecting the PTA determination noted above.

Patentee should be aware that in order to preserve the right to review in the United States District Court for the District of Columbia of the USPTO patent term adjustment determination, patentee must ensure that he or she also take the steps required under 35 U.S.C. 154(b)(4)(A) in a timely manner. Nothing in the request for recalculation should be construed as providing an alternative time frame for commencing a civil action under 35 U.S.C. 154(b)(4)(A).

Any questions concerning this decision should be directed to the Office of Patent Legal Administration at 571-272-7702.

UNITED STATES PATENT AND TRADEMARK OFFICE

UNITED STATES DEPARTMENT OF COMMERCE
United States Patent and Trademark Office
Address: COMMISSIONER FOR PATENTS
P.O. Box 1450
Alexandria, Virginia 22313-1450
www.uspto.gov

Kimberly V. Perry
U.S. Surgical
A division of Tyco Healthcare Group LP
150 Glover Avenue
Norwalk, CT 06856

Mail Date: 04/21/2010

Applicant	: James E. Jervis	: DECISION ON REQUEST FOR
Patent Number	: 7604609	: RECALCULATION of PATENT
Issue Date	: 10/20/2009	: TERM ADJUSTMENT IN VIEW
Appliction No	: 10/818,044	: OF WYETH AND NOTICE OF INTENT TO
Filed	: 04/05/2004	: ISSUE CERTIFICATE OF CORRECTION
		:

The Request for Recalculation is **GRANTED** to the extent indicated.

The patent term adjustment has been determined to be **841** days. The USPTO will *sua sponte* issue a certificate of correction reflecting the amount of PTA days determined by the recalculation.

Prior to the issuance of the certificate of correction, the USPTO will afford patentee an opportunity to be heard and request reconsideration. Accordingly, patentee has **one month or thirty (30) days**, whichever is longer, to file a request for reconsideration of this patent term adjustment calculation. See 35 U.S.C. 154(b)(3)(B)(ii) and 37 CFR 1.322(a)(4). No extensions of time will be granted under 37 CFR 1.136.

Patentee should use document code PET.OP if electronically filing a request for reconsideration of this patent term adjustment calculation. The patentee must also include the information required by 37 CFR 1.705(b)(2) and the fee required by 37 CFR 1.18(e). If patentee does not file a timely request for reconsideration of this patent term adjustment calculation including the information required by 37 CFR 1.705(b)(2) and the fee required by 37 CFR 1.18(e), the USPTO will issue a certificate of correction reflecting the PTA determination noted above.

Patentee should be aware that in order to preserve the right to review in the United States District Court for the District of Columbia of the USPTO patent term adjustment determination, patentee must ensure that he or she also take the steps required under 35 U.S.C. 154(b)(4)(A) in a timely manner. Nothing in the request for recalculation should be construed as providing an alternative time frame for commencing a civil action under 35 U.S.C. 154(b)(4)(A).

Any questions concerning this decision should be directed to the Office of Patent Legal Administration at 571-272-7702.

UNITED STATES PATENT AND TRADEMARK OFFICE

Commissioner for Patents
United States Patent and Trademark Office
P.O. Box 1450
Alexandria, VA 22313-1450
www.uspto.gov

JUL 2 2 2004

DCM

In re Application of Gordon L. Dorn Serial Number: 10/818,053 Filed: April 5, 2004 For: SYSTEM FOR STABILIZING SAMPLES	: : : : :	PETITION UNDER M.P.E.P.708.02 IV

This is in response to the petition filed April 5, 2004, requesting that the above-identified application be granted Special Status under Section 708.02 IV of the MPEP and 37 CFR 1.102(c) **(no fee required)**.

The request for Special Status considered under Section 708.02 IV of the MPEP is granted because criteria under 37 CFR 1.102(c) has been met.

Accordingly the petition is **GRANTED.**

Marian C Knode

Marian C. Knode, Special Programs Examiner
Technology Center 1700
Chemical and Materials Engineering

SIDLEY AUSTIN BROWN & WOOD LLP
717 NORTH HARWOOD
SUITE 3400
DALLAS TX 75201

UNITED STATES PATENT AND TRADEMARK OFFICE

Commissioner for Patents
United States Patent and Trademark Office
P.O. Box 1450
Alexandria, VA 22313-1450
www.uspto.gov

COPY MAILED

JUL 20 2007

OFFICE OF PETITIONS

Chi-Tung Chang
20525 Via Talavera
Yorba Linda, CA 92887

In re Application of :
Chang, et al. :
Application No. 10/818,065 : ON PETITION
Filed: April 3, 2004 :
Attorney Docket No.PO2995-FO2O

This is a decision on the petition under 37 CFR 1.181 filed on December 18, 2006, to withdraw the holding of abandonment in the above-cited application.

The petition is **DISMISSED**.

The above-identified application became abandoned for failure to reply to the Notice of Allowability mailed July 6, 2006, which set a statutory period for reply of three-months from its mailing date. The Notice of Allowability required corrected drawings to be filed. No response was received within the allowable period, and the application became abandoned on October 7, 2006. A Notice of Abandonment was mailed on November 15, 2006.

The instant petition was filed on December 18, 2006, wherein petitioner argues that corrected drawings were mailed on August 1, 2006, in response to the Notice of Allowability.

The petition will not be treated on its merits at this juncture because it is not signed by all of the necessary parties. Further to this point, 37 CFR 1.33(b) provides, in pertinent part that:

> b) *Amendments and other papers.* Amendments and other papers, except for written assertions pursuant to § 1.27(c)(2)(ii) of this part, filed in the application must be signed by:
>
> (1) **>A patent practitioner of record appointed in compliance with § 1.32(b);<
>
> (2) **>A patent practitioner not of record who acts in a representative capacity under the provisions of § 1.34;<
>
> (3) An assignee as provided for under § 3.71(b) of this chapter; or
>
> (4) All of the applicants (§ 1.41(b)) for patent, unless there is an assignee of the entire interest and such assignee has taken action in the application in accordance with § 3.71 of this chapter.

The petition, as filed on December 18, 2006, is defective because it is only signed by inventor Chang, but there are two additional joint inventors list on the application. The renewed petition must be signed by

either all the named joint inventors, an attorney of record in the application, or a representative of the assignee that is empowered by 37 CFR 3.73(b).

Further correspondence with respect to this matter should be addressed as follows:

By mail: Commissioner for Patents
United States Patent and Trademark Office
Box 1450
Alexandria, VA 22313-1450

By facsimile: (571) 273-8300
Attn: Office of Petitions

Telephone inquiries regarding this decision should be directed to the undersigned (571) 272-3222.

Kenya A. McLaughlin
Petitions Attorney
Office of Petitions

UNITED STATES PATENT AND TRADEMARK OFFICE

Commissioner for Patents
United States Patent and Trademark Office
P.O. Box 1450
Alexandria, VA 22313-1450
www.uspto.gov

WPAT, PC
INTELLECTUAL PROPERTY
ATTORNEYS
2030 MAIN STREET, SUITE 1300
IRVINE, CA 92614

COPY MAILED

SEP 28 2007

OFFICE OF PETITIONS

In re Application of :
Chang, et al. :
Application No. 10/818,065 : ON PETITION
Filed: April 3, 2004 :
Attorney Docket No.PO2995-FO2O

This is a decision on the petition under 37 CFR §1.137(b), September 13, 2007, to revive the above-identified application.

The petition is **granted**.

The above-identified application became abandoned for failure to reply to the Notice of Allowability mailed July 6, 2006, which set a statutory period for reply of three-months from its mailing date. The Notice of Allowability required corrected drawings to be filed. No response was received within the allowable period, and the application became abandoned on October 7, 2006. A Notice of Abandonment was mailed on November 15, 2006. A petition under 37 CFR 1.181 was filed on December 18, 2006, and dismissed by a decision mailed July 20, 2007.

Corrected drawings were received on September 13, 2007.

The application is being directed to the Office of Patent Publications for further processing.

Telephone inquiries concerning this decision may be directed to the undersigned at (571) 272-3222.

Kenya A. McLaughlin
Petitions Attorney
Office of Petitions

UNITED STATES PATENT AND TRADEMARK OFFICE

Commissioner for Patents
United States Patent and Trademark Office
P.O. Box 1450
Alexandria, VA 22313-1450
www.uspto.gov

Paper No. 101504

GREGORY H. ZAYIA
BRINKS HOFER GILSON & LIONE
NBC TOWER, SUITE 3600
P.O. BOX 10395
CHICAGO, IL 60610

DEC 29 2004

In re Application of:	:	
RUGGIERO RICCI	:	DECISION ON PETITION
Serial No.: 10/818,088	:	TO MAKE SPECIAL
Filed: April 05, 2004	:	
Attorney Docket No.: **12355/3**	:	

This is a decision on the petition under 37 C.F.R. § 1.102(c), filed April 05, 2004, to make the above-identified application special.

Petitioner requests that the above-identified application be made special under the accelerated examination procedure set forth in the Manual of Patent Examining Procedure (M.P.E.P.) § 708.02, Section IV: Applicant's Age.

A grantable petition to make special under 37 C.F.R. § 1.102, and in accordance with M.P.E.P. § 708.02, Section IV, must include evidence showing that the applicant is sixty five (65) years of age or more. No fee is required for this petition.

The petition includes a declaration from the inventor, Ruggiero Ricci, stating that he is sixty-five (65) years of age or more.

Accordingly, the petition is GRANTED.

After allowance, this application will be given priority for printing. See M.P.E.P. § 1309.

Inquiries regarding this decision should be directed to Edward Westin at (571) 272-1638.

Edward Westin

Edward Westin, Special Programs Examiner
Technology Center 2800
Semiconductors, Electrical and Optical
Systems and Components

UNITED STATES PATENT AND TRADEMARK OFFICE

UNITED STATES DEPARTMENT OF COMMERCE
United States Patent and Trademark Office
Address: COMMISSIONER FOR PATENTS
P.O. Box 1450
Alexandria, Virginia 22313-1450
www.uspto.gov

POLYONE CORPORATION
33587 WALKER ROAD
AVON LAKE, OH 44012

Mail Date: 04/26/2010

Applicant	: Tito Viswanathan	: DECISION ON REQUEST FOR
Patent Number	: 6916900	: RECALCULATION of PATENT
Issue Date	: 07/12/2005	: TERM ADJUSTMENT IN VIEW
Application No	: 10/818,114	: OF WYETH
Filed	: 04/05/2004	:
		:

The Patentee's Request for Recalculation is **DISMISSED.**

This Request is deemed ineligible for consideration for one or more of the following reasons:

(A). The patent for which PTA recalculation is requested is either a design or reissue application or is a reexamination proceeding;

(B). The patent for which PTA recalculation is requested resulted from a utility or plant application filed under 35 USC 111(a) before May 29, 2000 and no CPA filed in the application on/after May 29, 2000;

(C). The patent for which PTA recalculation is requested resulted from an international application in which the international filing date was before May 29, 2000 and no CPA filed in the application on/after May 29, 2000;

(D). The patent for which PTA recalculation is requested issued on/after March 2, 2010;

(E). The Request for Recalculation was filed more than 180 days after the grant date of the patent and the request was not filed within two months of a dismissal of a request for reconsideration of the of the patent term under 37 CFR 1.705(d);

(F). The Request for Recalculation is not solely limited to USPTO pre-Wyeth interpretation of 35 U.S.C. 154(b)(2)(A);

or

(G). A civil action was filed pursuant to 35 U.S.C. 154(b)(4)(A)concerning the same patent at issue in this request.

Patentee may file a reply to this decision dismissing the Request for Recalculation. Patentee must file such reply within one month or thirty days, whichever is longer, of the mail date of the decision dismissing the Request for Recalculation. No fee is required if patentee is asserting in the reply that the dismissal for ineligibility is improper.

Patentee should use document code PET.OP if electronically filing a reply to this dismissal. If the USPTO finds that the request was improperly deemed ineligible, the USPTO will mail applicant a recalculation determination.

Patentee should be aware that in order to preserve the right to review in the United States District Court for the District of Columbia of the USPTO patent term adjustment determination, patentee must ensure that he or she also take the steps required under 35 U.S.C. 154(b)(4)(A). Nothing in the request for recalculation should be construed as providing an alternative time frame for commencing a civil action under 35 U.S.C. 154 (b)(4)(A).

Any questions concerning this decision should be directed to the Office of Patent Legal Administration at 571-272-7702.

UNITED STATES PATENT AND TRADEMARK OFFICE

COMMISSIONER FOR PATENTS
UNITED STATES PATENT AND TRADEMARK OFFICE
P.O. BOX 1450
ALEXANDRIA, VA 22313-1450
www.uspto.gov

CHRISTOS TSIRONIS
1603 ST. REGIS
D. D. O. H9B-3H7 CA CANADA

COPY MAILED
APR 0 5 2006
OFFICE OF PETITIONS

In re Application of	:	
Christos Tsironis	:	
Application No. 10/818,126	:	ON PETITION
Filed: April 6, 2004	:	
Attorney Docket No. None	:	

This is a decision on the petition, filed January 26, 2006, to revive the above-identified application under 37 CFR 1.137(b).

The petition is **DISMISSED**.

A grantable petition under 37 CFR 1.137(b)[1] must be accompanied by: (1) the required reply,[2] unless previously filed; (2) the petition fee as set forth in 37 CFR 1.17(m); (3) a statement that the entire delay in filing the required reply from the due date for the reply until the filing of a grantable petition pursuant to 37 CFR 1.137(b) was unintentional; and (4) any terminal disclaimer (and fee as set forth in 37 CFR 1.20(d)) required by 37 CFR 1.137(c). Where there is a question as to whether either the abandonment or the delay in filing a petition under 37 CFR 1.137 was unintentional, the Commissioner may require additional information. See MPEP 711.03(c)(III)(C) and (D).

The petition lacks items 2 above.

A review of that record discloses that petitioner submitted a check for the petition fee in the amount of $750 on January 24, 2006. However, there were insufficient funds in petitioner's account and the check was returned unpaid. Accordingly, petitioner must submit the requisite $750 petition fee, along with a $50 returned check fee, before a decision on the petition to revive is rendered.

Any request for reconsideration of this decision must be submitted within TWO (2) MONTHS from the mail date of this decision. Extensions of time under 37 CFR 1.136(a) are permitted. The

[1] As amended effective December 1, 1997. See Changes to Patent Practice and Procedure; Final Rule Notice, 62 Fed. Reg. 53131, 53194-95 (October 10, 1997), 1203 Off. Gaz. Pat. Office 63, 119-20 (October 21, 1997).

[2] In a nonprovisional application abandoned for failure to prosecute, the required reply may be met by the filing of a continuing application. In an application or patent, abandoned or lapsed for failure to pay the issue fee or any portion thereof, the required reply must be the payment of the issue fee or any outstanding balance thereof.

reconsideration request should include a cover letter entitled "Renewed Petition under 37 CFR 1.137(b)." This is **not** final agency action within the meaning of 5 U.S.C. § 704.

Further correspondence with respect to this matter should be addressed as follows:

By mail: Mail Stop PETITION
Commissioner for Patents
Post Office Box 1450
Alexandria, VA 22313-1450

By hand: U.S. Patent and Trademark Office
Customer Service Window, Mail Stop PETITION
Randolph Building
401 Dulany Street
Alexandria, VA 22314

The centralized facsimile number is **(571) 273-8300**.

Any questions concerning this matter may be directed to the undersigned at (571) 272-3204.

Sherry D. Brinkley

Sherry D. Brinkley
Petitions Examiner
Office of Petitions

UNITED STATES PATENT AND TRADEMARK OFFICE

COMMISSIONER FOR PATENTS
UNITED STATES PATENT AND TRADEMARK OFFICE
P.O. BOX 1450
ALEXANDRIA, VA 22313-1450
www.uspto.gov

CHRISTOS TSIRONIS
1603 ST. REGIS
D. D. O. H9B-3H7 CA CANADA

COPY MAILED

JUL 17 2006

OFFICE OF PETITIONS

In re Application of
Thristos Tsironis
Application No. 10/818,126
Filed: April 6, 2004
Attorney Docket No. None

ON PETITION

This is a decision on the communication filed April 19, 2006, which is being treated as a renewed petition to revive the above-identified application under the provisions of 37 CFR 1.137(b).

The above-identified application became abandoned for failure to respond in a timely manner to the Notice of Allowability mailed August 15, 2005. A Notice of Abandonment was mailed on December 30, 2005. On January 26, 2006, a petition under 37 CFR 1.137(b) was filed; however, the petition was dismissed in a decision mailed April 5, 2006. On April 19, 2006, the present petition was filed.

The petition, as supplemented, satisfies the requirements of 37 CFR 1.137(b) in that petitioner has supplied (1) the reply in the form of corrected drawings; (2) the petition fee of $750; and (3) the required statement of unintentional delay. Accordingly, the petition is **GRANTED**.

The application is being referred to the Office of Publications to oversee the review of the drawing filed January 26, 2006.

Telephone inquires related to this decision may be directed to the undersigned at (571) 272-3204. Status inquires related to processing at Publishing Division should be directed to (571) 272-4200.

Sherry D. Brinkley
Petitions Examiner
Office of Petitions

UNITED STATES PATENT AND TRADEMARK OFFICE

COMMISSIONER FOR PATENTS
UNITED STATES PATENT AND TRADEMARK OFFICE
P.O. BOX 1450
ALEXANDRIA, VA 22313-1450
www.uspto.gov

JJGJr: 09-04

Paper No: __

JACKSON WALKER LLP
2435 NORTH CENTRAL EXPRESSWAY
SUITE 600
RICHARDSON TX 75080

COPY MAILED

SEP 16 2004

OFFICE OF PETITIONS

In re Application of	:	
Teillet, et al.	:	
Application No. 10/818,137	:	ON PETITION
Filed/Deposited: 5 April, 2004	:	
Attorney Docket No. 100318-00121	:	

This is a decision on the petition filed on 26 July, 2004, nominally as a "Response to Notice of Incomplete Nonprovisional Application," and considered under 37 C.F.R. §1.53, to obtain a filing date of 5 April, 2004, for Fig(s). 8 -19 as described in the specification.

For the reasons set forth below, the petition is **DISMISSED**.

BACKGROUND

This application was deposited on 5 April, 2004.

On 22 June, 2004, the Office mailed a Notice of Omitted Items (the 22 June Notice) in a Nonprovisional Application (the 22 June Notice) indicating that, while a filing date had been accorded, it appeared that Fig(s). 8 - 19 as described in the specification had been omitted. Further, Petitioner was reminded that the alternatives were to accept the filing date and the application in the form deposited, or submit evidence (date stamped receipt card) that the Office received the drawings in question (along with substitute copies of the drawings), or submit the drawings and accept the new filing date as of the date of their submission.

Instead, Petitioner petitioned (with fee) to obtain the filing date, but submitted no evidence of

their prior receipt by the Office, and argues that the instant application is a continuation of a then-pending application which has now issued as U.S. Patent No. 6,717,555.

Analysis

A search of the official file reveals that on 5 April,.2004, Petitioner deposited the instant application, and stated therein on the first page of the specification that this was a "Continuation . . . of U.S. patent application Serial No. 10/085,245 Filed 02-28-2002" and that "[t]he entire disclosure of the prior application . . . is considered as being part of the disclosure of the accompanying application and is hereby incorporated by reference."

CONCLUSION

The petition is **dismissed**.

Because Petitioner asserts that the first paragraph of the specification states that the application is a continuation of Application Serial No. 10/085,245 Filed 02-28-2002, and pending as of the filing of the instant application, and that application was incorporated by reference. This incorporation may be proper in practice before the Office. (See: MPEP §201.06(c) (in pertinent part).)[1] As a matter of expediting prosecution, Petitioner may submit a copy of the parent application (Application Serial No. 10/085,245 Filed 02-28-2002) with a preliminary amendment and seek entry of that amendment by the Examiner.)

The instant application is released to OIPE for further processing as necessary consistent with this decision before being forwarded for examination in due course.

---

[1] The commentary at MPEP §201.06(c) provides in pertinent part:

* * *

INCORPORATION BY REFERENCE

* * *

In a continuation or divisional application, the safe-guard (petition and fee under former 37 C.F.R. 1.60(b)) concerning the filing of an application lacking all of the pages of the specification or sheets of drawings of the prior application has not been retained in 37 C.F.R. 1.53(b) since the specification and drawings of a continuation or divisional application are not limited to a reproduction or a "true copy" of the prior application. As a safeguard, however, an applicant may incorporate by reference the prior application by including, in the continuation or divisional application-as-filed, a statement that such specifically enumerated prior application or applications are "hereby incorporated herein by reference." The statement may appear in the specification or in the application transmittal letter. The incorporation by reference statement can only be relied upon to permit the entering of a portion of the prior application into the continuation or divisional application when the portion of the prior application has been inadvertently omitted from the submitted application papers in the continuation or divisional application The inclusion of this incorporation by reference of the prior application(s) will permit an applicant to amend the continuation or divisional application to include any subject matter in such prior application(s), without the need for a petition provided the continuation or divisional application is entitled to a filing date notwithstanding the incorporation by reference. (Emphasis supplied.).

Telephone inquiries concerning this decision may be directed to the undersigned at (703)305-9199.

John J. Gillon, Jr.
Senior Attorney
Office of Petitions

UNITED STATES PATENT AND TRADEMARK OFFICE

COMMISSIONER FOR PATENTS
UNITED STATES PATENT AND TRADEMARK OFFICE
P.O. BOX 1450
ALEXANDRIA, VA 22313-1450
www.uspto.gov

OIPE JC68 SEP 27 2004 PATENT & TRADEMARK OFFICE

JJGJr: 09-04

Paper No: __

JACKSON WALKER LLP
2435 NORTH CENTRAL EXPRESSWAY
SUITE 600
RICHARDSON TX 75080

COPY MAILED
SEP 16 2004
OFFICE OF PETITIONS

In re Application of	:	
Teillet, et al.	:	
Application No. 10/818,137	:	ON PETITION
Filed/Deposited: 5 April, 2004	:	
Attorney Docket No. 100318-00121	:	

This is a decision on the petition filed on 26 July, 2004, nominally as a "Response to Notice of Incomplete Nonprovisional Application," and considered under 37 C.F.R. §1.53, to obtain a filing date of 5 April, 2004, for Fig(s). 8 -19 as described in the specification.

For the reasons set forth below, the petition is **DISMISSED**.

RECEIVED
SEP 20 2004

BACKGROUND

This application was deposited on 5 April, 2004.

On 22 June, 2004, the Office mailed a Notice of Omitted Items (the 22 June Notice) in a Nonprovisional Application (the 22 June Notice) indicating that, while a filing date had been accorded, it appeared that Fig(s). 8 - 19 as described in the specification had been omitted. Further, Petitioner was reminded that the alternatives were to accept the filing date and the application in the form deposited, or submit evidence (date stamped receipt card) that the Office received the drawings in question (along with substitute copies of the drawings), or submit the drawings and accept the new filing date as of the date of their submission.

Instead, Petitioner petitioned (with fee) to obtain the filing date, but submitted no evidence of

their prior receipt by the Office, and argues that the instant application is a continuation of a then-pending application which has now issued as U.S. Patent No. 6,717,555.

Analysis

A search of the official file reveals that on 5 April,.2004, Petitioner deposited the instant application, and stated therein on the first page of the specification that this was a "Continuation . . . of U.S. patent application Serial No. 10/085,245 Filed 02-28-2002" and that "[t]he entire disclosure of the prior application . . . is considered as being part of the disclosure of the accompanying application and is hereby incorporated by reference."

CONCLUSION

The petition is **dismissed**.

Because Petitioner asserts that the first paragraph of the specification states that the application is a continuation of Application Serial No. 10/085,245 Filed 02-28-2002, and pending as of the filing of the instant application, and that application was incorporated by reference. This incorporation may be proper in practice before the Office. (See: MPEP §201.06(c) (in pertinent part).)[1] As a matter of expediting prosecution, Petitioner may submit a copy of the parent application (Application Serial No. 10/085,245 Filed 02-28-2002) with a preliminary amendment and seek entry of that amendment by the Examiner.)

The instant application is released to OIPE for further processing as necessary consistent with this decision before being forwarded for examination in due course.

---

[1] The commentary at MPEP §201.06(c) provides in pertinent part:

* * *

INCORPORATION BY REFERENCE

* * *

In a continuation or divisional application, the safe-guard (petition and fee under former 37 C.F.R. 1.60(b)) concerning the filing of an application lacking all of the pages of the specification or sheets of drawings of the prior application has not been retained in 37 C.F.R. 1.53(b) since the specification and drawings of a continuation or divisional application are not limited to a reproduction or a "true copy" of the prior application. As a safeguard, however, an applicant may incorporate by reference the prior application by including, in the continuation or divisional application-as-filed, a statement that such specifically enumerated prior application or applications are "hereby incorporated herein by reference." The statement may appear in the specification or in the application transmittal letter. The incorporation by reference statement can only be relied upon to permit the entering of a portion of the prior application into the continuation or divisional application when the portion of the prior application has been inadvertently omitted from the submitted application papers in the continuation or divisional application The inclusion of this incorporation by reference of the prior application(s) will permit an applicant to amend the continuation or divisional application to include any subject matter in such prior application(s), without the need for a petition provided the continuation or divisional application is entitled to a filing date notwithstanding the incorporation by reference. (Emphasis supplied.).

Telephone inquiries concerning this decision may be directed to the undersigned at (703)305-9199.

John J. Gillon, Jr.
Senior Attorney
Office of Petitions

UNITED STATES PATENT AND TRADEMARK OFFICE

Commissioner for Patents
United States Patent and Trademark Office
P.O. Box 1450
Alexandria, VA 22313-1450
www.uspto.gov

NOVARTIS VACCINES AND DIAGNOSTICS INC.
INTELLECTUAL PROPERTY R338
P.O. BOX 8097
EMERYVILLE, CA 94662-8097

COPY MAILED

AUG 20 2008

In re Application of	:	
Itoh et al.	:	
Application No. 10/818,140	:	DECISION ON PETITION
Filed: April 5, 2004	:	
Attorney Docket No. 60219-15/PP-16758.008	:	

This is a decision on the petition under the unintentional provisions of 37 CFR 1.137(b), filed October 10, 2007, to revive the above-identified application.

The petition is **DISMISSED**.

Any request for reconsideration of this decision must be submitted within TWO (2) MONTHS from the mail date of this decision. Extensions of time under 37 CFR 1.136(a) are permitted. The reconsideration request should include a cover letter entitled "Renewed Petition under 37 CFR 1.137(b)." This is **not** a final agency action within the meaning of 5 U.S.C. § 704.

A grantable petition under 37 CFR 1.137(b) must be accompanied by: (1) the required reply, unless previously filed; (2) the petition fee as set forth in 37 CFR 1.17(m); (3) a statement that the entire delay in filing the required reply from the due date for the reply until the filing of a grantable petition pursuant to 37 CFR 1.137(b) was unintentional; and (4) any terminal disclaimer (and fee as set forth in 37 CFR 1.20(d)) required by 37 CFR 1.137(d). Where there is a question as to whether either the abandonment or the delay in filing a petition under 37 CFR 1.137 was unintentional, the Director may require additional information. See MPEP 711.03(c)(II)(C) and (D). The instant petition lacks item 1.

The application became abandoned for failure to timely file a reply within the meaning of 37 CFR 1.113 to the final Office action of December 4, 2006. A Notice of Abandonment was mailed July 16, 2007. The proposed reply required for consideration of a petition to revive must be a Notice of Appeal (and appeal fee required by 37 CFR 41.20(b)(2)), an amendment that *prima facie* places the application in condition for allowance, a Request for Continued Examination (RCE) and submission (37 CFR 1.114), or the filing of a continuing application under 37 CFR 1.53(b). *See* MPEP 711.03(c)(III)(A)(2). Since the amendment submitted does not *prima facie* place the application in condition for allowance, the reply required must be a Notice of Appeal (and appeal fee), RCE, or the filing of a continuing application under 37 CFR 1.53(b).

The Examiner has responded to the Amendment After Final with an Advisory Action (copy enclosed).

Additionally, the signature and the printed name on the petition differ. It is not apparent whether the statement of unintentional delay was signed by a person who would have been in a position of knowing that the entire delay in filing the required reply from the due date for the reply until the filing of a grantable petition pursuant to 37 CFR 1.137(b) was unintentional. Nevertheless, in accordance with 37 CFR 10.18, the statement is accepted as constituting a certification of unintentional delay. However, in the event that petitioner has no knowledge that the delay was unintentional, petitioner must make such an inquiry to ascertain that, in fact, the delay was unintentional. If petitioner discovers that the delay was intentional, petitioner must notify the Office.

Further, the file does not indicate a change of address has been submitted, although the address given on the petition differs from the address of record. If appropriate, a request to change the address of record should be filed. A courtesy copy of this decision is being mailed to the address given on the petition; however, the Office will mail all future correspondence solely to the address of record.

Further correspondence with respect to this matter should be addressed as follows:

By Mail: Mail Stop PETITION
Commissioner for Patents
P. O. Box 1450
Alexandria, VA 22313-1450

By hand: U. S. Patent and Trademark Office
Customer Service Window, Mail Stop Petitions
Randolph Building
401 Dulany Street
Alexandria, VA 22314

The centralized facsimile number is **(571) 273-8300.**

Telephone inquiries concerning this decision should be directed to Joan Olszewski at (571) 272-7751.

Liana Walsh
Petitions Examiner
Office of Petitions

cc: Jane E.R. Potter
1201 Third Avenue, Suite 2200
Seattle, WA 98101-3045

Enclosure: Examiner's Advisory Action

Advisory Action Before the Filing of an Appeal Brief	Application No. 10/818,140	Applicant(s) ITOH ET AL.	
	Examiner RUIXIANG LI	Art Unit 1646	

--The MAILING DATE of this communication appears on the cover sheet with the correspondence address --

THE REPLY FILED 10 October 2007 FAILS TO PLACE THIS APPLICATION IN CONDITION FOR ALLOWANCE.

1. ☒ The reply was filed after a final rejection, but prior to or on the same day as filing a Notice of Appeal. To avoid abandonment of this application, applicant must timely file one of the following replies: (1) an amendment, affidavit, or other evidence, which places the application in condition for allowance; (2) a Notice of Appeal (with appeal fee) in compliance with 37 CFR 41.31; or (3) a Request for Continued Examination (RCE) in compliance with 37 CFR 1.114. The reply must be filed within one of the following time periods:
   a) ☐ The period for reply expires _____months from the mailing date of the final rejection.
   b) ☐ The period for reply expires on: (1) the mailing date of this Advisory Action, or (2) the date set forth in the final rejection, whichever is later. In no event, however, will the statutory period for reply expire later than SIX MONTHS from the mailing date of the final rejection.
   Examiner Note: If box 1 is checked, check either box (a) or (b). ONLY CHECK BOX (b) WHEN THE FIRST REPLY WAS FILED WITHIN TWO MONTHS OF THE FINAL REJECTION. See MPEP 706.07(f).

Extensions of time may be obtained under 37 CFR 1.136(a). The date on which the petition under 37 CFR 1.136(a) and the appropriate extension fee have been filed is the date for purposes of determining the period of extension and the corresponding amount of the fee. The appropriate extension fee under 37 CFR 1.17(a) is calculated from: (1) the expiration date of the shortened statutory period for reply originally set in the final Office action; or (2) as set forth in (b) above, if checked. Any reply received by the Office later than three months after the mailing date of the final rejection, even if timely filed, may reduce any earned patent term adjustment. See 37 CFR 1.704(b).

NOTICE OF APPEAL

2. ☐ The Notice of Appeal was filed on _____. A brief in compliance with 37 CFR 41.37 must be filed within two months of the date of filing the Notice of Appeal (37 CFR 41.37(a)), or any extension thereof (37 CFR 41.37(e)), to avoid dismissal of the appeal. Since a Notice of Appeal has been filed, any reply must be filed within the time period set forth in 37 CFR 41.37(a).

AMENDMENTS

3. ☐ The proposed amendment(s) filed after a final rejection, but prior to the date of filing a brief, will not be entered because
   (a) ☐ They raise new issues that would require further consideration and/or search (see NOTE below);
   (b) ☐ They raise the issue of new matter (see NOTE below);
   (c) ☐ They are not deemed to place the application in better form for appeal by materially reducing or simplifying the issues for appeal; and/or
   (d) ☐ They present additional claims without canceling a corresponding number of finally rejected claims.
   NOTE: _____. (See 37 CFR 1.116 and 41.33(a)).
4. ☐ The amendments are not in compliance with 37 CFR 1.121. See attached Notice of Non-Compliant Amendment (PTOL-324).
5. ☒ Applicant's reply has overcome the following rejection(s): See Continuation Sheet.
6. ☐ Newly proposed or amended claim(s) _____ would be allowable if submitted in a separate, timely filed amendment canceling the non-allowable claim(s).
7. ☒ For purposes of appeal, the proposed amendment(s): a) ☐ will not be entered, or b) ☒ will be entered and an explanation of how the new or amended claims would be rejected is provided below or appended.
   The status of the claim(s) is (or will be) as follows:
   Claim(s) allowed: _____.
   Claim(s) objected to: _____.
   Claim(s) rejected: *20,21 and 60-63*.
   Claim(s) withdrawn from consideration: _____.

AFFIDAVIT OR OTHER EVIDENCE

8. ☐ The affidavit or other evidence filed after a final action, but before or on the date of filing a Notice of Appeal will not be entered because applicant failed to provide a showing of good and sufficient reasons why the affidavit or other evidence is necessary and was not earlier presented. See 37 CFR 1.116(e).
9. ☐ The affidavit or other evidence filed after the date of filing a Notice of Appeal, but prior to the date of filing a brief, will not be entered because the affidavit or other evidence failed to overcome all rejections under appeal and/or appellant fails to provide a showing a good and sufficient reasons why it is necessary and was not earlier presented. See 37 CFR 41.33(d)(1).
10. ☐ The affidavit or other evidence is entered. An explanation of the status of the claims after entry is below or attached.

REQUEST FOR RECONSIDERATION/OTHER

11. ☒ The request for reconsideration has been considered but does NOT place the application in condition for allowance because: See Continuation Sheet.
12. ☐ Note the attached Information *Disclosure Statement*(s). (PTO/SB/08) Paper No(s). _____
13. ☐ Other: _____.

Continuation of 5. Applicant's reply has overcome the following rejection(s): the rejection of claim 63 under 35 U.S.C. 112, first paragraph for scope of enablement.

Continuation of 11. does NOT place the application in condition for allowance because: the rejections of claims 20 and 60 under 35 U.S.C. 112, first paragraph and the rejection of claims 20, 21, and 60-63 under 35 U.S.C. 102 (e) as being anticipated by Edwards et al. (US Patent No. 6,639,063) is maintained.

(i).The rejections of claims 20 and 60 under 35 U.S.C. 112, first paragraph for scope of enablement
Applicants continue to argue that one of skill in the art could readily practice the claimed invention without undue experimentation. This is not persuausive for the reasons set forth in the previous office actions.

(ii). The rejection of claims 30 and 60 under 35 U.S.C. 112, first paragraph for written description
Applicants argue that the pending claims are drawn to antibodies that specifically bind to the polypeptides set forth in the particularly claimed amino acid equence identifier number (SEQ ID NO: 4), and at least one conservative substitution, as well as a kit of the same. Applicants argue that the amino acid sequence of SEQ ID NO: 4 provides a complete structure of the polypeptide to which the antibodies specifically bind. This is not found to be persuasive because the specification only discloses a single species, the polypeptide of SEQ ID NO: 4, and such a disclosure is insufficient to support for the broad genus of FGF variants and homologues encompassed by the claims. Accordingly, the specification does not provide adequate support for the antibodies that specifically bind to the broad genus of FGF variants and homologues .

(iii). the rejection of claims 20, 21, and 60-63 under 35 U.S.C. 102 (e) as being anticipated by Edwards et al. (US Patent No. 6,639,063)
Applicants argue that the office action improperly dismisses the affidavit as insufficient evidence to show prior reduction to practice of variants of SEQ ID NO: 4 and antibodies to the same, as such subject matter is not present in the cited reference. Applicants argue that kavanaugh affidavit is proper and sufficient evidence, in accordance with 37 C.F.R. 1.131, and taken in combination with the instant application as well as the other evidence previously made of record, to overcome the Edwards reference cited under 35 U.S.C. 102 (e).

Applicants' argument has been fully considered, but is not deemed to be persuasive because while the declaration establishes the showing of possession of the polypeptide of SEQ ID NO: 4, it does not show that applicants were in possession of the FGF-21 variants, and thus the antibodies that bind FGF-21 variants.

UNITED STATES PATENT AND TRADEMARK OFFICE

Commissioner for Patents
United States Patent and Trademark Office
P.O. Box 1450
Alexandria, VA 22313-1450
www.uspto.gov

TED MASTERS
TED MASTERS & ASSOCIATES, INC.
5121 SPICEWOOD DRIVE
CHARLOTTE NC 28227-0313

COPY MAILED

JUN 0 4 2009

OFFICE OF PETITIONS

In re Application of	:
Billmers et al.	:
Application No. 10/818148	: DECISION ON PETITION
Filing or 371(c) Date: 04/05/2004	: UNDER 37 CFR 1.78(a)(6)
Title of Invention: SYSTEM FOR VIEWING	:
OBJECTS AT A FIRE SCENE AND	:
METHOD OF USE	:

This is a decision on the petition to accept an unintentionally delayed claim for the benefit of a prior filed application under 37 CFR 1.78, filed May 15, 2009. The petition is properly treated under 37 CFR 1.78(a)(6).

The petition is **GRANTED**.

A petition for acceptance of a claim for late priority under 37 CFR 1.78(a)(6) is only applicable to those applications filed on or after November 29, 2000. Further, the petition is appropriate only after the expiration of the period specified in 37 CFR 1.78(a)(5)(ii). In addition, the petition under 37 CFR 1.78(a)(6) must be accompanied by:

(1) the reference required by 35 U.S.C. § 119 and 37 CFR 1.78(a)(5)(i) of the prior-filed application, unless previously submitted;
(2) the surcharge set forth in § 1.17(t); and
(3) a statement that the entire delay between the date the claim was due under 37 CFR 1.78(a)(5)(ii) and the date the claim was filed was unintentional. The Director may require additional information where there is a question whether the delay was unintentional.

It is noted that the statement of unintentional delay varies from the rule and has been interpreted to be that the entire delay between the date the claim was due under paragraph (a)(2(ii) and (a)(5)(ii) was unintentional. If this interpretation is not correct petitioner is required to promptly notify this Office.

All the above requirements having been satisfied, the late claim for priority under 35 U.S.C. § 119 is accepted as being unintentionally delayed.

The granting of the petition to accept the delayed benefit claim to the prior-filed application under 37 CFR 1.78(a)(6) should not be construed as meaning that this application is entitled to the benefit of the prior-filed application. In order for this application to be entitled to the benefit of the prior-filed application, all other requirements under 35 U.S.C. § 119 and 37 CFR 1.78(a)(4) and (a)(5) must be met. Similarly, the fact that the corrected Filing Receipt accompanying this decision on petition includes the prior-filed application should not be construed as meaning that applicant is entitled to the claim for benefit of priority to the prior-filed application noted thereon. Accordingly, the examiner will, in due course, consider this benefit claim and determine whether the application is entitled to the benefit of the earlier filing date.

A corrected Filing Receipt, which includes the priority claim to the prior-filed provisional application, accompanies this decision on petition.

Any inquiries concerning this decision may be directed to Derek Woods at (571) 272-3232. All other inquiries concerning either the examination procedures or status of the application should be directed to the Technology Center.

This application is being forwarded to Technology Center Art Unit 3662 for consideration by the examiner of the claim under 35 U.S.C. §119(e) for the benefit of priority to the prior-filed provisional application.

Anthony Knight
Supervisor
Office of Petitions

ATTACHMENT: Corrected Filing Receipt

UNITED STATES PATENT AND TRADEMARK OFFICE

UNITED STATES DEPARTMENT OF COMMERCE
United States Patent and Trademark Office
Address: COMMISSIONER FOR PATENTS
P.O. Box 1450
Alexandria, Virginia 22313-1450
www.uspto.gov

APPLICATION NUMBER	FILING or 371(c) DATE	GRP ART UNIT	FIL FEE REC'D	ATTY.DOCKET.NO	TOT CLAIMS	IND CLAIMS
10/818,148	04/05/2004	3662	560		18	3

CONFIRMATION NO. 4587

CORRECTED FILING RECEIPT

OC000000036274407

40742
TED MASTERS
TED MASTERS & ASSOCIATES, INC.
5121 SPICEWOOD DRIVE
CHARLOTTE, NC 28227-0313

Date Mailed: 06/02/2009

Receipt is acknowledged of this non-provisional patent application. The application will be taken up for examination in due course. Applicant will be notified as to the results of the examination. Any correspondence concerning the application must include the following identification information: the U.S. APPLICATION NUMBER, FILING DATE, NAME OF APPLICANT, and TITLE OF INVENTION. Fees transmitted by check or draft are subject to collection. Please verify the accuracy of the data presented on this receipt. **If an error is noted on this Filing Receipt, please submit a written request for a Filing Receipt Correction. Please provide a copy of this Filing Receipt with the changes noted thereon. If you received a "Notice to File Missing Parts" for this application, please submit any corrections to this Filing Receipt with your reply to the Notice. When the USPTO processes the reply to the Notice, the USPTO will generate another Filing Receipt incorporating the requested corrections**

Applicant(s)

Richard I. Billmers, Langhorne, PA;
Elizabeth J. Billmers, Langhorne, PA;
Vincent M. Contarino, Lusby, MD;
Rudolph Lucente, North Wales, PA;
Mary E. Ludwig, Newark, DE;

Power of Attorney:
Theodore Masters--36209

Domestic Priority data as claimed by applicant

This application is a CIP of 10/417,550 04/17/2003 PAT 6,724,467
which claims benefit of 60/373,853 04/19/2002

Foreign Applications

If Required, Foreign Filing License Granted: 06/02/2009

The country code and number of your priority application, to be used for filing abroad under the Paris Convention, is **US 10/818,148**

Projected Publication Date: Request for Non-Publication Acknowledged

Non-Publication Request: Yes

Early Publication Request: No
**** SMALL ENTITY ****

Title

SYSTEM FOR VIEWING OBJECTS AT A FIRE SCENE AND METHOD OF USE

Preliminary Class

356

PROTECTING YOUR INVENTION OUTSIDE THE UNITED STATES

Since the rights granted by a U.S. patent extend only throughout the territory of the United States and have no effect in a foreign country, an inventor who wishes patent protection in another country must apply for a patent in a specific country or in regional patent offices. Applicants may wish to consider the filing of an international application under the Patent Cooperation Treaty (PCT). An international (PCT) application generally has the same effect as a regular national patent application in each PCT-member country. The PCT process **simplifies** the filing of patent applications on the same invention in member countries, but **does not result** in a grant of "an international patent" and does not eliminate the need of applicants to file additional documents and fees in countries where patent protection is desired.

Almost every country has its own patent law, and a person desiring a patent in a particular country must make an application for patent in that country in accordance with its particular laws. Since the laws of many countries differ in various respects from the patent law of the United States, applicants are advised to seek guidance from specific foreign countries to ensure that patent rights are not lost prematurely.

Applicants also are advised that in the case of inventions made in the United States, the Director of the USPTO must issue a license before applicants can apply for a patent in a foreign country. The filing of a U.S. patent application serves as a request for a foreign filing license. The application's filing receipt contains further information and guidance as to the status of applicant's license for foreign filing.

Applicants may wish to consult the USPTO booklet, "General Information Concerning Patents" (specifically, the section entitled "Treaties and Foreign Patents") for more information on timeframes and deadlines for filing foreign patent applications. The guide is available either by contacting the USPTO Contact Center at 800-786-9199, or it can be viewed on the USPTO website at http://www.uspto.gov/web/offices/pac/doc/general/index.html.

For information on preventing theft of your intellectual property (patents, trademarks and copyrights), you may wish to consult the U.S. Government website, http://www.stopfakes.gov. Part of a Department of Commerce initiative, this website includes self-help "toolkits" giving innovators guidance on how to protect intellectual property in specific countries such as China, Korea and Mexico. For questions regarding patent enforcement issues, applicants may call the U.S. Government hotline at 1-866-999-HALT (1-866-999-4158).

LICENSE FOR FOREIGN FILING UNDER

Title 35, United States Code, Section 184

Title 37, Code of Federal Regulations, 5.11 & 5.15

GRANTED

The applicant has been granted a license under 35 U.S.C. 184, if the phrase "IF REQUIRED, FOREIGN FILING LICENSE GRANTED" followed by a date appears on this form. Such licenses are issued in all applications where the conditions for issuance of a license have been met, regardless of whether or not a license may be required as

set forth in 37 CFR 5.15. The scope and limitations of this license are set forth in 37 CFR 5.15(a) unless an earlier license has been issued under 37 CFR 5.15(b). The license is subject to revocation upon written notification. The date indicated is the effective date of the license, unless an earlier license of similar scope has been granted under 37 CFR 5.13 or 5.14.

This license is to be retained by the licensee and may be used at any time on or after the effective date thereof unless it is revoked. This license is automatically transferred to any related applications(s) filed under 37 CFR 1.53(d). This license is not retroactive.

The grant of a license does not in any way lessen the responsibility of a licensee for the security of the subject matter as imposed by any Government contract or the provisions of existing laws relating to espionage and the national security or the export of technical data. Licensees should apprise themselves of current regulations especially with respect to certain countries, of other agencies, particularly the Office of Defense Trade Controls, Department of State (with respect to Arms, Munitions and Implements of War (22 CFR 121-128)); the Bureau of Industry and Security, Department of Commerce (15 CFR parts 730-774); the Office of Foreign AssetsControl, Department of Treasury (31 CFR Parts 500+) and the Department of Energy.

NOT GRANTED

No license under 35 U.S.C. 184 has been granted at this time, if the phrase "IF REQUIRED, FOREIGN FILING LICENSE GRANTED" DOES NOT appear on this form. Applicant may still petition for a license under 37 CFR 5.12, if a license is desired before the expiration of 6 months from the filing date of the application. If 6 months has lapsed from the filing date of this application and the licensee has not received any indication of a secrecy order under 35 U.S.C. 181, the licensee may foreign file the application pursuant to 37 CFR 5.15(b).

UNITED STATES PATENT AND TRADEMARK OFFICE

Commissioner for Patents
United States Patent and Trademark Office
P.O. Box 1450
Alexandria, VA 22313-1450
www.uspto.gov

Townsend and Townsend and Crew, LLP
Two Embarcadero Center
Eighth Floor
San Francisco, CA 94111-3834

COPY MAILED

MAY 16 2008

OFFICE OF PETITIONS

In re Application of	:	
James F. Zucherman et al.	:	
Application No. 10/818,154	:	DECISION ON PETITION
Filed: April 5, 2004	:	TO WITHDRAW
Attorney Docket No. 19433A-001620US	:	FROM RECORD
	:	

This is a decision on the Request to Withdraw as attorney or agent of record under 37 C.F.R. § 1.36(b), filed November 14, 2007.

The request is **NOT APPROVED** as moot.

A review of the file record indicates that the power of attorney to Mark D. Barrish and all attorneys/agents associated with customer number 20350 has been revoked by the assignee of the patent application on December 20, 2007. Accordingly, the request to withdraw under 37 C.F.R. § 1.36(b) is moot.

All future communications from the Office will continue to be directed to the below-listed address until otherwise notified by applicant.

Telephone inquires concerning this decision should be directed to Kimberly Inabinet at 571-272- 4618.

Kimberly Inabinet
Petitions Examiner
Office of Petitions

cc: Coats & Bennett/Medtronics
1400 Crescent Green
Suite 300
Cary, NC 27518

UNITED STATES PATENT AND TRADEMARK OFFICE

Commissioner for Patents
United States Patent and Trademark Office
P.O. Box 1450
Alexandria, VA 22313-1450
www.uspto.gov

HAHN LOESER & PARKS
ONE GOJO PLAZA
SUITE 300
AKRON, OH 44311-1076

COPY MAILED

APR 12 2006

OFFICE OF PETITIONS

In re Application of	:	
Wendell E. Mast et al	:	
Application No. 10/818,171	:	DECISION ON PETITION
Filed: April 5, 2004	:	TO MAKE SPECIAL UNDER
Attorney Docket No. 116384.00110	:	37 CFR 1.102(d)
	:	

This is a decision on the petition under 37 CFR § 1.102(d), filed March 17, 2006, to make the above-identified application special based on actual infringement as set forth in M.P.E.P. § 708.02, Section II.

The petition is **GRANTED**.

A grantable petition to make an application special under 37 CFR § 1.102(d) and MPEP § 708.02, Section II: Infringement, must be accompanied by the required fee pursuant to 37 CFR 1.17(h) and a statement by the applicant, assignee, or attorney/agent registered to practice before the Office alleging:

> (A) That there is an infringing device or product actually on the market or method in use;
>
> (B) That a rigid comparison of the alleged infringing device, product, or method with the claims of the application has been made, and that, in his or her opinion, some of the claims are unquestionably infringed; and
>
> (c) That he or she has made or caused to be made a careful and thorough search of the prior art or has a good knowledge of the pertinent prior art.
>
> Applicant must provide one copy of each of the references deemed most closely related to the subject matter encompassed by the claims if said references are not already of record.

The petition complies wit hall the above stated requirements. Accordingly, the above-identified

application has been accorded "special" status.

Telephone inquiries concerning this decision should be directed to Wan Laymon at 571-272-3220.

All other inquiries concerning either the examination or status of the application should be directed to the Technology Center.

This matter is being referred to Technology Center AU 3722 for action on the merits commensurate with decision.

Denise Pothier

Denise Pothier
Petitions Examiner
Office of Petitions

UNITED STATES PATENT AND TRADEMARK OFFICE

OFFICE

COPY MAILED

JUN 19 2006

Director's Office
Office of Patent Publication

REVEO, INC.
85 EXECUTIVE BOULEVARD
ELMSFORD, NY 10523

In re Application of	:	
CALLAHAN, ROBERT W. et al.	:	
Application No. 10/818,173	:	**DECISION ON PETITION**
Filed: April 5, 2004	:	
Attorney Docket No. REVEO-0086USAAP	:	

This is a decision on the Petition To Withdraw Holding Of Abandonment Under 37 CFR 1.181, received in the United States Patent & Trademark (USPTO) on May 1, 2006.

The petition is **DISMISSED**.

The above-identified application was held abandoned for applicant's failure to timely pay the issue fee, as required in the Notice of Allowance and Fee(s) Due, mailed September 12, 2005. The Notice of Abandonment, mailed on March 28, 2006 indicates that the submitted fee of $300 is insufficient. A balance of $700 is due.

The Office acknowledges receipt of Part B – Fee(s) Transmittal via facsimile transmission on December 12, 2005, authorizing that the Issue Fee, and Publication fee be charged to Deposit Account No. 50-1648. On December 12, 2005, when an attempt was made by the Office of Finance to charge the fees, there were insufficient funds in the Deposit Account to charge all the required fees.

37 CFR 1.25 (a) and (b), which states in part:

> 1.25(a) ...An amount sufficient to cover all fee, services, copies, etc., requested must always be on deposit. Charges to accounts with insufficient funds will not be accepted."
>
> 1.25 (b) ...An authorization to charge a fee to a deposit account will not be considered payment of the fee on the date the authorization to charge the fee is effective as to the particular fee to be charged unless sufficient funds are present in the account to cover the fee.

Petitioner has included a duplicate copy of the Part B - Fee(s) Transmittal, Form PTOL-85B. The issue fee in the amount of $700 was charged to Deposit Account No. 50-1648 on May 2, 2006.

However, in light of the non-compliance with 37 CFR 1.25, the holding of abandonment cannot be withdrawn.

Applicant may seek relief by filing a petition for Revival of Abandoned Application under CFR § 1.137 (a) or (b). (Forms are available at USPTO website http://www.uspto.gov)

- Under 37 CFR 1.137(a), a petition for the revival of an ***unavoidable*** abandoned application
- Under 37 CFR 1.137(b), a petition for the revival of an ***unintentionally*** abandoned application

Further inquires with respect to filing a petition under 37 CFR § 1.137 may be directed to the Office of Petitions at 571-272-3282 or addressed as follows:

By mail: Mail Stop Petitions
Commissioner for Patents
Office of Petitions
P O Box 1450
Alexandria, VA 22313-1450

Telephone inquires concerning this decision matter may be directed to the undersigned at 703 308-9250 Ext. 137.

Thomas E Hawkins

Thomas E. Hawkins
Paralegal Specialist
Office of the Director
Office of Patent Publications

UNITED STATES PATENT AND TRADEMARK OFFICE

Commissioner for Patents
United States Patent and Trademark Office
P.O. Box 1450
Alexandria, VA 22313-1450
www.uspto.gov

REVEO, INC.
85 Executive Boulevard
Elmsford NY 10523

COPY MAILED
AUG 28 2006
OFFICE OF PETITIONS

In re Application of
Callahan et al.
Application No. 10/818,173
Filed: April 5, 2004
Attorney Docket Number: REVO-0086USAAAPN0
Title of Invention: Polymer Matrix Material

ON PETITION

This is a decision on the petition filed July 20, 2006, under 37 CFR 1.137(b) to revive the above-identified application.

This application became abandoned for failure to timely submit the issue and publication fees, as required by the Notice of Allowance and Fee (s) Due which was mailed September 12, 2005. The Notice of Allowance and Fee (s) Due set a three (3) month statutory period for reply. Extensions of time were not available under the provisions of 37 CFR 1.136(a). Accordingly, this application became abandoned on December 13, 2005. A Notice of Abandonment was mailed was mailed on March 28, 2006. A petition under 37 CFR 1.181 was dismissed on June 19, 2006.

The requirements for a grantable petition under 37 CFR 1.137(b) have been met. This petition is hereby **Granted**.

The address given on the petition differs from the address of record. If appropriate, a change of address should be filed in accordance with MPEP 601.03. A courtesy copy of this decision is being mailed to the address given on the petition. However, the Office will mail all future correspondence solely to the address of record.

This application is being forwarded to the Office of Patent Publication for processing into a patent.

Telephone inquiries should be directed to the undersigned at (571) 272-3215.

Charlema R. Grant

Charlema R. Grant
Petitions Attorney
Office of Petitions

cc: Reveo, INC.
3 Westchester Plaza
Elmsford, New York 10523

UNITED STATES PATENT AND TRADEMARK OFFICE

Commissioner for Patents
United States Patent and Trademark Office
P.O. Box 1450
Alexandria, VA 22313-1450
www.uspto.gov

W. L. Gore & Associates, Inc.
551 Paper Mill Road
P.O. Box 9206
Newark DE 19714-9206

COPY MAILED

NOV 30 2004

OFFICE OF PETITIONS

In re Application of
Jain & Wu
Application No. 10/818,214
Filed: June 20, 2003
Attorney Docket No. FA/255
For: WATERPROOF AND HIGH MOISTURE VAPOR PERMEABLE FABRIC LAMINATE

: DECISION ACCORDING STATUS
: UNDER 37 CFR 1.47(a)

This is in response to the petition under 37 CFR 1.47(a), filed October 1, 2004 (certificate of mailing date September 27, 2004).

The petition is granted.

Petitioner has shown that the non-signing inventor, Huey Shen Wu, has refused to join in the filing of the above-identified application after having been presented with the application papers. Specifically, the affidavit of Attorney Charles F. Knapp establishes that the inventor received the application papers, including the specification, claims and drawings, but directed his attorney, Henry Heiman, not to return his signed declaration to Attorney Knapp. Petitioner has submitted a declaration in compliance with 37 CFR 1.63 and 1.64. Pursuant to petitioner's authorization, deposit account no. 07-1729 will be charged the required $130.00 petition fee.

This application and papers have been reviewed and found in compliance with 37 CFR 1.47(a). This application is hereby accorded Rule 1.47(a) status.

As provided in Rule 1.47(c), this Office will forward notice of this application's filing to the non-signing inventor at the address given in the petition. Notice of the filing of this application will also be published in the Official Gazette.

After this decision is mailed, the above-identified application will be forwarded to Technology Center 1771 for examination in due course.

Telephone inquiries should be directed to the undersigned at (571) 272-3230.

E. Shirene Willis

E. Shirene Willis
Senior Petitions Attorney
Office of Petitions

UNITED STATES PATENT AND TRADEMARK OFFICE

Commissioner for Patents
United States Patent and Trademark Office
P.O. Box 1450
Alexandria, VA 22313-1450
www.uspto.gov

Ms. Edie Boudreau
31 Adams Street
P.O. Box 594
Eureka, NV 89316-0594

COPY MAILED

SEP 29 2006

OFFICE OF PETITIONS

In re Application of Boudreau :
Application No. 10/818,217 :
Filing Date: April 1, 2004 :
For: Security Lockboxes -- Several :
Designs, Two Materials, Two :
Locks, and Two Brackets :

Decision on Petition

This is a decision on the petition under 37 CFR 1.137(b), filed May 25, 2006, to revive the above-identified application.

The petition is **granted**.

The above-identified application became abandoned for failure to reply in a timely manner to the non-final Office action mailed June 30, 2005, which set a shortened statutory period for reply of three (3) months. Although a reply was filed November 10, 2005, the reply was not accompanied by the proper payment for an extension of time. Accordingly, the above-identified application became abandoned October 1, 2005.

The instant petition requests revival of the application.

Petitioner has met the requirements to revive the above-identified application pursuant to 37 CFR 1.137(b). Therefore, the petition is granted and the application is revived.

The reply filed November 10, 2005, will be treated as if timely filed.

Technology Center Art Unit 3676 will be informed of the instant decision and the application will be further examined in due course.

Telephone inquiries regarding this communication should be directed to Petitions Attorney Steven Brantley at (571) 272-3203.

Charles Steven Brantley
Senior Petitions Attorney
Office of Petitions

NOTICE RE: CERTIFICATES OF CORRECTION

DATE : 5/16/06 **Paper No.:**

TO : **Supervisor, Art Unit** _____

SUBJECT : Certificate of Correction Request in Patent No.: 6,972,530

A response to the following question is requested with respect to the accompanying request for a certificate of correction.

With respect to the change(s) requested, correcting Office and/or Applicant's errors, should the patent read as shown in the certificate of correction? No new matter should be introduced, nor should the scope or meaning of the claims be changed.

PLEASE COMPLETE THIS FORM AND
RETURN WITH FILE, WITHIN 7 DAYS,
TO CERTIFICATES OF CORRECTION BRANCH - PK 3-915/922
PALM LOCATION 7580 - TEL. N0. 305-8309

THANK YOU FOR YOUR ASSISTANCE!

Note your decision by placing a check mark in the appropriate box below, indicating whether all changes requested in the Request for Certificate of Correction should be applied. Please specify which changes should not be applied and indicate the reason(s) for denial, in the "Comments" section below.

☐ **YES** ☒ **NO**

☒ **Comments: The request for a Certificate of Correction with respect to the Patent Term Adjustment being changed from "0 days" to "154(b) by 19 days" is not approved.** You need to forward application to examiner for the other request.

Mark Polutta
Office of Patent Legal Administration **Art Unit**

UNITED STATES PATENT AND TRADEMARK OFFICE

Commissioner for Patents
United States Patent and Trademark Office
P.O. Box 1450
Alexandria, VA 22313-1450
www.uspto.gov

Date Mailed : 11-29-06

Patent No.: 6,972,530
Patent Issued : December 6, 2005
Inventor(s): Jane Xin-LeBlanc
Title: APPARATUS AND METHOD FOR TRANSPARENT DYNAMIC RANGE SCALING FOR OPEN LOOP LED DRIVERS
Docket No.:

Re: Request for Certificate of Correction

Consideration has been given your request for the issuance of a certificate of correction for the above-identified patent under the provisions of Rule 1.322.

The request for a Certificate of Correction with respect to the Patent term Adjustment being changed from "0 days" to " 154(b) by 19 days" is not approved per examiner.

In view of the foregoing, your request is hereby denied. However, further consideration will be given upon receipt of a request for reconsideration directed to Decisions & Certificates of Correction Branch.

Eva James
For Cecelia B. Newman
Certificate of Correction Branch
(703) 308-9390 ext. 124 or ext. 102

Joshua W. Korver
Merchant & Gould P.C.
P.O. Box 2903
Minneapolis, MN 55402-0903

ej

UNITED STATES PATENT AND TRADEMARK OFFICE

Commissioner for Patents
United States Patent and Trademark Office
P.O. Box 1450
Alexandria, VA 22313-1450
www.uspto.g

LAW FIRM OF PETER V.D. WILDE
301 EAST LANDING
WILLIAMSBURG, VA 23185

COPY MAILED

AUG 0 6 2008

OFFICE OF PETITIONS

In re Application of
Feuer et al.
Application No. 10/818,242
Filed: April 5, 2004
Attorney Docket No. 2000-0503CON

DECISION ON PETITION

This is a decision on the petition under the unintentional provisions of 37 CFR 1.137(b), filed December 13, 2007, to revive the above-identified application.

The petition is **GRANTED**.

The application became abandoned for failure to reply in a timely manner to the non-final Office action mailed December 29, 2006, which set a shortened statutory period for reply of three (3) months. No extensions of time under the provisions of 37 CFR 1.136(a) were obtained. Accordingly, the application became abandoned on March 30, 2007. A Notice of Abandonment was mailed August 9, 2007.

The petition satisfies the requirements of 37 CFR 1.137(b) in that petitioner has supplied (1) the reply in the form of an Amendment, (2) the petition fee of $1,540.00, and (3) an adequate statement of unintentional delay.

Telephone inquiries concerning this decision should be directed to Joan Olszewski at (571) 272-7751.

This application is being referred to Technology Center AU 2613 for appropriate action by the Examiner in the normal course of business on the reply received.

Liana Walsh
Petitions Examiner
Office of Petitions

UNITED STATES PATENT AND TRADEMARK OFFICE

Commissioner for Patents
United States Patent and Trademark Office
P.O. Box 1450
Alexandria, VA 22313-1450
www.uspto.gov

POSINELLI SHALTON WELTE SUELTHAUS PC
7733 FORSYTH BLVD., 12TH FLOOR
ST LOUIS, MO 63105

COPY MAILED

SEP 15 2008

In re Application of	:	
THISSEN, Rafael K.	:	
Application No. 10/818,290	:	DECISION ON PETITION
Filed: April 05, 2004	:	TO WITHDRAW
Attorney Docket No.	:	FROM RECORD
	:	

This is a decision on the Request to Withdraw as attorney or agent of record under 37 C.F.R. § 1.36(b), filed August 07, 2008.

The request is **APPROVED**.

A grantable request to withdraw as attorney/agent of record must be signed by every attorney/agent seeking to withdraw or contain a clear indication that one attorney is signing on behalf of another/others. The Office requires the practitioner(s) requesting withdrawal to certify that he, she, or they have: (1) given reasonable notice to the client, prior to the expiration of the response period, that the practitioner(s) intends to withdraw from employment; (2) delivered to the client or a duly authorized representative of the client all papers and property (including funds) to which the client is entitled; and (3) notified the client of any responses that may be due and the time frame within which the client must respond, pursuant 37 CFR 10.40(c).

The request was signed by Brian B. Diekhoff on behalf of all attorneys of record who are associated with customer No. 23489. All attorneys/agents associated have been withdrawn. Applicant is reminded that there is no attorney of record at this time.

All future correspondence will be directed to the first named inventor Rafael K. Thissen at the address indicated below.

Telephone inquiries concerning this decision should be directed to Michelle R. Eason at 571-272-4231.

Michelle R. Eason
Paralegal Specialist
Office of Petitions

cc: **RAFAEL K. THISSEN**
18695 WILD HORSE CREEK ROAD
CHESTERFIELD, MO 63005

UNITED STATES PATENT AND TRADEMARK OFFICE

UNITED STATES DEPARTMENT OF COMMERCE
United States Patent and Trademark Office
Address: COMMISSIONER FOR PATENTS
P.O. Box 1450
Alexandria, Virginia 22313-1450
www.uspto.gov

MICHAEL BEST & FRIEDRICH LLP
100 E WISCONSIN AVENUE
Suite 3300
MILWAUKEE, WI 53202

Mail Date: 04/21/2010

Applicant	: Michael J. Reinke	: DECISION ON REQUEST FOR
Patent Number	: 7648686	: RECALCULATION of PATENT
Issue Date	: 01/19/2010	: TERM ADJUSTMENT IN VIEW
Appliction No	: 10/818,298	: OF WYETH AND NOTICE OF INTENT TO
Filed	: 04/05/2004	: ISSUE CERTIFICATE OF CORRECTION
		:

The Request for Recalculation is **GRANTED** to the extent indicated.

The patent term adjustment has been determined to be **966** days. The USPTO will *sua sponte* issue a certificate of correction reflecting the amount of PTA days determined by the recalculation.

Prior to the issuance of the certificate of correction, the USPTO will afford patentee an opportunity to be heard and request reconsideration. Accordingly, patentee has **one month or thirty (30) days**, whichever is longer, to file a request for reconsideration of this patent term adjustment calculation. See 35 U.S.C. 154(b)(3)(B)(ii) and 37 CFR 1.322(a)(4). No extensions of time will be granted under 37 CFR 1.136.

Patentee should use document code PET.OP if electronically filing a request for reconsideration of this patent term adjustment calculation. The patentee must also include the information required by 37 CFR 1.705(b)(2) and the fee required by 37 CFR 1.18(e). If patentee does not file a timely request for reconsideration of this patent term adjustment calculation including the information required by 37 CFR 1.705(b)(2) and the fee required by 37 CFR 1.18(e), the USPTO will issue a certificate of correction reflecting the PTA determination noted above.

Patentee should be aware that in order to preserve the right to review in the United States District Court for the District of Columbia of the USPTO patent term adjustment determination, patentee must ensure that he or she also take the steps required under 35 U.S.C. 154(b)(4)(A) in a timely manner. Nothing in the request for recalculation should be construed as providing an alternative time frame for commencing a civil action under 35 U.S.C. 154(b)(4)(A).

Any questions concerning this decision should be directed to the Office of Patent Legal Administration at 571-272-7702.

UNITED STATES PATENT AND TRADEMARK OFFICE

Commissioner for Patents
United States Patent and Trademark Office
P.O. Box 1450
Alexandria, VA 22313-1450
www.uspto.gov
DIW Apr-07

SIEMENS CORPORATION
INTELLECTUAL PROPERTY DEPARTMENT
170 WOOD AVENUE SOUTH
ISELIN NJ 08830

COPY MAILED

APR 0 3 2007

OFFICE OF PETITIONS

In re Application of	:	
Stephen Scott Strickland	:	
Application No. 10/818,322	:	DECISION ON PETITION
Filed: 5 April, 2004	:	
Atty Docket No. 2003P05374US01	:	

This is a decision on the petition filed on 11 December, 2006, under 37 CFR 1.137(b),[1] to revive the above-identified application.

The petition is **GRANTED**.

The application became abandoned on 19 December, 2005, for failure to timely reply to the Notice of Non-Compliant Amendment (37 CFR 1.121) mailed on 18 November, 2005, which set a one (1) month shortened period for reply. No extensions of time under 37

---

[1] Effective December 1, 1997, the provisions of 37 CFR 1.137(b) now provide that where the delay in reply was unintentional, a petition may be filed to revive an abandoned application or a lapsed patent pursuant to 37 CFR 1.137(b). A grantable petition filed under the provisions of 37 CFR 1.137(b) must be accompanied by:

(1) the required reply, unless previously filed. In a nonprovisional application abandoned for failure to prosecute, the required reply may be met by the filing of a continuing application. In a nonprovisional utility or plant application filed on or after June 8, 1995, and abandoned for failure to prosecute, the required reply may also be met by the filing of a request for continuing examination in compliance with § 1.114. In an application or patent, abandoned or lapsed for failure to pay the issue fee or any portion thereof, the required reply must be the payment of the issue fee or any outstanding balance thereof.

(2) the petition fee as set forth in 37 CFR 1.17(m);

(3) a statement that the entire delay in filing the required reply from the due date for the reply until the filing of a grantable petition pursuant to 37 CFR 1.137(b) was unintentional. The Commissioner may required additional information where there is a question whether the delay was unintentional; and

(4) any terminal disclaimer (and fee as set forth in 37 CFR 1.20(d)) required pursuant to 37 CFR 1.137(c)).

CFR 1.136(a) were obtained. Notice of Abandonment was mailed on 30 October, 2006.

Receipt of the corrected drawings sheets is acknowledged.

This application is being referred to Technology Center 2876 for further processing.

Telephone inquiries concerning this matter may be directed to the undersigned at (571)272-3231.

DWood

Douglas I. Wood
Senior Petitions Attorney
Office of Petitions

UNITED STATES PATENT AND TRADEMARK OFFICE

Commissioner for Patents
United States Patent and Trademark Office
P.O. Box 1450
Alexandria, VA 22313-1450
www.uspto.gov

PATTI, HEWITT & AREZINA LLC
ONE NORTH LASALLE STREET
44TH FLOOR
CHICAGO IL 60602

COPY MAILED

FEB 1 3 2008

OFFICE OF PETITIONS

In re Application of :
Chin et al. :
Application No. 10/818384 :
Filing or 371(c) Date: 04/05/2004 :
Attorney Docket Number: LUC-478/CHIN 7-1 : ON PETITION

This is a decision on the "Petition to Withdraw Abandonment, filed December 20, 2007. The petition is properly treated under 37 C.F.R. § 1.181(a).

This Petition is hereby **granted**.

The above-identified application became abandoned for failure to timely and properly reply to the Notice of Non-Compliant Amendment ("Notice"), mailed July 20, 2007. The Notice set a one (1) month period for reply. No response having been received, the application became abandoned on August 21, 2007. A Notice of Abandonment was mailed December 12, 2007.

With the present petition, Applicant has demonstrated non-receipt of the Notice by a preponderance of the evidence.

In view of the foregoing, the holding of abandonment is hereby withdrawn.

No petition fee has been charged and none is due.

The application will be referred to Technology Center Art Unit 2617 for re-mailing of the Notice.

Telephone inquiries concerning this matter should be directed to the undersigned at (571) 272-3232.

Derek L. Woods
Attorney
Office of Petitions

UNITED STATES PATENT AND TRADEMARK OFFICE

Commissioner for Patents
United States Patent and Trademark Office
P.O. Box 1450
Alexandria, VA 22313-1450
www.uspto.gov

COPY MAILED
NOV 17 2006
OFFICE OF PETITIONS

BROMBERG & SUNSTEIN LLP
125 SUMMER STREET
BOSTON MA 02110-1618

In re Application	:	
Kamen, et al.	:	
Application No. 10/818,386	:	DECISION ON APPLICATION
Filed: April 5, 2004	:	FOR PATENT TERM ADJUSTMENT
Atty Docket No. 1062/E16	:	

This is a decision on the "REQUEST FOR RECONSIDERATION OF PATENT TERM ADJUSTMENT INDICATED IN NOTICE OF ALLOWANCE" filed August 28, 2006. Applicant requests that the initial determination of patent term adjustment under 35 U.S.C. 154(b) be corrected from zero (0) days to two hundred (200) days.

The application for patent term adjustment is **GRANTED** to the extent indicated herein.

The Office has updated the PAIR screen to reflect that the correct Patent Term Adjustment (PTA) determination at the time of the mailing of the Notice of Allowance is **one hundred sixty-two (162) days.** A copy of the updated PAIR screen, showing the correct determination, is enclosed.

On June 14, 2006, the Office mailed the Determination of Patent Term Adjustment under 35 U.S.C. 154(b) in the above identified application. The Notice stated that the patent term adjustment (PTA) to date is zero (0) days. On June 28, 2006, Applicants timely[1] submitted the instant application for patent term adjustment, asserting that the correct number of days of PTA at the time of the mailing of the Notice of Allowance is two hundred (200) days.

Applicants assert entitlement to a patent term adjustment of two hundred (200) days on the basis that the PTO did not timely mail a response to the Amendment filed on September 1, 2005. While the Office mailed a Notice of Allowability on November 25, 2005, it was not until June 14, 2006 that the Office mailed a Notice of Allowance. Accordingly, Applicants assert that the PTO should have been assessed additional delay of two hundred (200) days, representing the number of days beginning on November 26, 2006 and ending on June 14, 2006.

Applicants state that the patent issuing from the application is subject to a terminal disclaimer.

The Office initially determined a patent term adjustment of zero (0) days based on an adjustment for PTO delay of zero (0) days, reduced by Applicants' delay of two (2) days pursuant to 35 U.S.C. 154(b)(2)(C)(iii) and 37 C.F.R. § 1.704(c)(10).

Pursuant to 37 C.F.R. § 1.703(a)(2), the Office had until January 1, 2006 to mail an action under 35 U.S.C. 132 or a Notice of Allowance. The Office did not mail a Notice of Allowance until June 14, 2006. Accordingly, pursuant to 37 C.F.R. § 1.703(a)(2), PTO delay should have been assessed as one hundred, sixty-four (164) days.

Additionally, the record reveals that applicants filed a Rule 312 Amendment on September 11, 2006. The Office mailed a response on September 12, 2006. Accordingly, pursuant to 37 C.F.R. § 1.704(c)(10), applicant delay of two (2) days was assessed.

In view thereof, the correct determination of patent term adjustment at the time of the mailing of the Notice of Allowance is **one hundred sixty-two (162) days** (164 days of PTO delay reduced by 2 days of applicant delay).

---

[1] Applicants filed the application for patent term adjustment together with the filing of the issue fee.

The Office acknowledges submission of the $200.00 fee set forth in 37 C.F.R. § 1.18(e).

The application file is being forwarded to the Office of Patent Publication for processing into a patent.

Telephone inquiries specific to this matter should be directed to Cliff Congo, Petitions Attorney, at (571)272-3207.

Kery A. Fries

Kery Fries
Senior Legal Advisor
Office of Patent Legal Administration
Office of Deputy Commissioner
for Patent Examination Policy

Enclosure: Copy of Revised PAIR Screen
Draft Certificate of Correction

DRAFT

UNITED STATES PATENT AND TRADEMARK OFFICE

CERTIFICATE OF CORRECTION

PATENT : 7,131,706 B2

DATED : Nov. 11, 2006

INVENTOR(S) : Kamen et al.

It is certified that error appears in the above-identified patent and that said Letters Patent is hereby corrected as shown below:

On the cover page,

[*] Notice: Subject to any disclaimer, the term of this patent is extended or adjusted under 35 USC 154(b) by (0) days

Delete the phrase "by 0 days" and insert – by 162 days--

Day : Thursday
Date: 11/16/2006

PALM INTRANET

Time: 11:56:11

PTA Calculations for Application: 10/818386			
Application Filing Date:	04/05/2004	PTO Delay (PTO):	0
Issue Date of Patent:	11/07/2006	Three Years:	0
Pre-Issue Petitions:	0	Applicant Delay (APPL):	2
Post-Issue Petitions:	0	Total PTA (days):	162
PTO Delay Adjustment:	164		

File Contents History

Number	Date	Contents Description	PTO	APPL	START
54	11/16/2006	ADJUSTMENT OF PTA CALCULATION BY PTO	164		
51	11/07/2006	PATENT ISSUE DATE USED IN PTA CALCULATION			
50	09/12/2006	MAIL RESPONSE TO 312 AMENDMENT (PTO-271)			
49	09/12/2006	RESPONSE TO AMENDMENT UNDER RULE 312			
48	09/11/2006	AMENDMENT AFTER NOTICE OF ALLOWANCE (RULE 312)		2	50
47	09/07/2006	EXPORT TO FINAL DATA CAPTURE			
46	08/31/2006	DISPATCH TO FDC			
45	08/31/2006	APPLICATION IS CONSIDERED READY FOR ISSUE			
44	08/28/2006	ISSUE FEE PAYMENT VERIFIED			
43	08/28/2006	ISSUE FEE PAYMENT RECEIVED			
42	08/23/2006	MAIL MISCELLANEOUS COMMUNICATION TO APPLICANT			
41	08/22/2006	MISCELLANEOUS COMMUNICATION TO APPLICANT - NO ACTION COUNT			
40	08/09/2006	FINISHED INITIAL DATA CAPTURE			
39	06/19/2006	EXPORT TO INITIAL DATA CAPTURE			
38	06/14/2006	MAIL NOTICE OF ALLOWANCE			
37	06/14/2006	MAIL NOTICE OF WITHDRAWN ACTION			
36	06/08/2006	ISSUE REVISION COMPLETED			
35	06/08/2006	NOTICE OF ALLOWANCE DATA VERIFICATION COMPLETED			
34	05/30/2006	NOTICE OF ALLOWABILITY			
33	05/30/2006	LETTER WITHDRAWING / VACATING OFFICE ACTION			

32	03/01/2006	MAIL NOTICE OF RESTARTED RESPONSE PERIOD			
31	02/28/2006	LETTER RESTARTING PERIOD FOR RESPONSE (I.E. LETTER RE: REFERENCES)			
30	11/25/2005	MAIL NON-FINAL REJECTION			
29	11/23/2005	NON-FINAL REJECTION			
28	10/03/2005	PARALEGAL TD ACCEPTED			
27	09/01/2005	TERMINAL DISCLAIMER FILED		0	25
26	09/23/2005	DATE FORWARDED TO EXAMINER			
25	09/01/2005	RESPONSE AFTER NON-FINAL ACTION			
24	07/22/2005	MAIL NON-FINAL REJECTION			
23	07/20/2005	NON-FINAL REJECTION			
22	05/26/2005	DATE FORWARDED TO EXAMINER			
21	05/19/2005	RESPONSE AFTER NON-FINAL ACTION			
20	05/19/2005	NEW OR ADDITIONAL DRAWING FILED			
17	03/04/2005	MAIL NON-FINAL REJECTION			
16	03/02/2005	NON-FINAL REJECTION			
15	12/15/2004	DATE FORWARDED TO EXAMINER			
14	12/06/2004	RESPONSE TO ELECTION / RESTRICTION FILED			
13	12/06/2004	WORKFLOW INCOMING AMENDMENT IFW			
12	11/03/2004	MAIL RESTRICTION REQUIREMENT			
11	11/01/2004	REQUIREMENT FOR RESTRICTION / ELECTION			
10	10/08/2004	IFW TSS PROCESSING BY TECH CENTER COMPLETE			
9	10/08/2004	CASE DOCKETED TO EXAMINER IN GAU			
8	06/17/2004	APPLICATION RETURN FROM OIPE			
7	06/17/2004	APPLICATION RETURN TO OIPE			
6	06/17/2004	APPLICATION DISPATCHED FROM OIPE			
5	06/18/2004	APPLICATION IS NOW COMPLETE			
4	05/03/2004	CLEARED BY OIPE CSR			
3	05/03/2004	CASE CLASSIFIED BY L&R			
2	04/14/2004	IFW SCAN & PACR AUTO SECURITY REVIEW			
1	04/05/2004	INITIAL EXAM TEAM NN			

Search Another: Application# [ ] Search

EXPLANATION OF PTA CALCULATION

EXPLANATION OF PTE CALCULATION

To go back use Back button on your browser toolbar.

Back to PALM | ASSIGNMENT | OASIS | Home page

UNITED STATES PATENT AND TRADEMARK OFFICE

CERTIFICATE OF CORRECTION

PATENT : 7,131,706 B2

DATED : Nov. 11, 2006

INVENTOR(S) : Kamen et al.

It is certified that error appears in the above-identified patent and that said Letters Patent is hereby corrected as shown below:

On the cover page,

[*] Notice: Subject to any disclaimer, the term of this patent is extended or adjusted under 35 USC 154(b) by (0) days

Delete the phrase "by 0 days" and insert – by 162 days--

UNITED STATES PATENT AND TRADEMARK OFFICE

Commissioner for Patents
United States Patent and Trademark Office
P.O. Box 1450
Alexandria, VA 22313-1450
www.uspto.gov

5-17-07

Glen F. Gallinger
7420 Milner Drive, #1000
Colorado Springs, CO 80920

In re application of	:	
Randy Hatton	:	DECISION ON
Serial No. 10/818,400	:	PETITION
Filed: April 6, 2004	:	
For: RECIRCULATING WATER ENERGISING APPARATUS		

This is a decision on the REQUEST FOR WITHDRAWAL AS ATTORNEY OR AGENT AND CHANGE OF CORRESPONDENCE ADDRESS, filed February 1, 2007.

This request is **DISMISSED** as moot.

A review of the file record indicates that the power of attorney to GLEN F. GALLINGER (Reg. No. 34,168) has been revoked by the applicant of the patent application on February 22, 2007. Accordingly, the request to withdraw under 37 C.F.R. § 1.36(b) is moot.

All future communications from the Office will continue to be directed to the below-listed address until otherwise notified by applicant.

Telephone inquires concerning this decision should be directed to Technology Center 1700 at 571-272-1100.

Jacqueline M. Stone

Jacqueline M. Stone, Director
Technology Center 1700
Chemical and Materials Engineering

cc : **Randy Hatton**
HC 71, Box 17a
Eagle Nest, NM 87718

UNITED STATES PATENT AND TRADEMARK OFFICE

Commissioner for Patents
United States Patent and Trademark Office
P.O. Box 1450
Alexandria, VA 22313-1450
www.uspto.gov

Date : April 29, 2008

Randy Hatton
HC 71 Box 17a
Eagle Nest, NM 87718

Patent No: 7,326,339 B1
Application No: 10/818,400
Applicant: Randy Hatton
Issued: February 5, 2008
Title: **RECIRCULATING WATER ENERGISING APPARATUS**

Request for Certificate of Correction:

Consideration has been given to your request for the issuance of a certificate of correction for the above- identified patent under the provisions of Rule 1.322.

Inspection of the application for the above patent reveals that the errors mentioned in your request is in fact printed in accordance with the record in the Patent and Trademark Office, as passed to issue by the examiner. There being no fault on the part of the Patent and Trademark Office, it has no authority to issue a certificate of correction under the provision of 1.322.

In view of the foregoing your request in this matter is hereby **denied**.

However, further consideration will be given to these matters, upon receipt of a request for certificate of correction under the provision of 1.323, accompanied by the appropriate fee, which is presently $100.

Virginia Tolbert
For Mary Diggs, Supervisor
Decisions and Certificate of Correction
(703) 308-8309 or (703) 308-9390 ext. 113

vt

UNITED STATES PATENT AND TRADEMARK OFFICE

COMMISSIONER FOR PATENTS
UNITED STATES PATENT AND TRADEMARK OFFICE
P.O. BOX 1450
ALEXANDRIA, VA 22313-1450
www.uspto.gov

Kris T. Fredrick
Intellectual Property Honeywell International, Inc
101 Columbia Rd.
P.O. Box 2245
Morristown, NJ 07962

COPY MAILED
AUG 1 8 2005
OFFICE OF PETITIONS

In re Application of :
Liu : DECISION ON PETITION
Application No. 10/818,403 :
Filed: April 5, 2004 :
Docket No.: H0006401-0769 :

This is a decision on the petition under 37 CFR 1.137(b), filed July 25, 2005, to revive the above-identified application.

The petition is **GRANTED**.

This application became abandoned June 29, 2005 for failure to timely submit the issue fee in response to the Notice of Allowance and Issue Fee(s) Due ("Notice") mailed March 28, 2005. The Notice set a three (3) month statutory period for reply. This decision precedes Notice of Abandonment.

A grantable petition pursuant to 37 C.F.R. § 1.137(b) must be accompanied by: (1) the required reply to the outstanding Office action or notice, unless previously filed; (2) the petition fee as set forth in 37 C.F.R. § 1.17(m); (3) a statement that the entire delay in filing the required reply from the due date for the reply until the filing of a grantable petition pursuant to 37 C.F.R. § 1.137(b) was unintentional; and (4)any terminal disclaimer (and fee set forth in 37 C.F.R. § 1.20(d)) required pursuant to 37 C.F.R. § 1.137(c).

The instant petition has been reviewed and found in compliance with the provisions of 37 CFR 1.137(b). Accordingly, the failure to timely submit a proper reply to the Notice is accepted as having been unintentionally delayed.

This application will be forwarded to the Publications Division for further processing.

Telephone inquiries concerning this matter may be directed to the undersigned at (571) 272-3205.

Alesia M. Brown
Petitions Attorney
Office of Petitions

UNITED STATES PATENT AND TRADEMARK OFFICE

Commissioner for Patents
United States Patent and Trademark Office
P.O. Box 1450
Alexandria, VA 22313-1450
www.uspto.gov

COPY MAILED
OCT 3 0 2006
OFFICE OF PETITIONS

ORUM & ROTH
53 W. JACKSON BLVD
CHICAGO IL 60604

In re Application of	:	
Hartmut Ilch et al.	:	
Application No. 10/818,409	:	DECISION ON PETITION
Filed: April 5, 2004	:	TO WITHDRAW
Attorney Docket No. 13821	:	FROM RECORD
	:	

This is a decision on the Request to Withdraw as attorney or agent of record under 37 C.F.R. § 1.36(b), filed July 16, 2006.

The request is **APPROVED**.

A grantable request to withdraw as attorney/agent of record must be signed by every attorney/agent seeking to withdraw or contain a clear indication that one attorney is signing on behalf of another/others. A request to withdraw will not be approved unless at least 30 (thirty) days would remain between the date of approval and the later of the expiration date of a time to file a response or the expiration date of the maximum time period which can be extended under 37 C.F.R. § 1.136(a).

The request was signed by Catherine L. Glemrich attorney/agent of record on behalf of herself.

Catherine L. Glemrich has been withdrawn as attorney or agent of record; all other attorneys remain of record.

All future communications from the Office will continue to be directed to the above-listed address until otherwise properly notified by the applicant.

There is an outstanding Office action mailed July 5, 2006 that requires a reply from the applicant.

Telephone inquiries concerning this decision should be directed to Charles Smoot at 571-272-3299.

David Bucci
Petitions Examiner
Office of Petitions

UNITED STATES PATENT AND TRADEMARK OFFICE

Commissioner for Patents
United States Patent and Trademark Office
P.O. Box 1450
Alexandria, VA 22313-1450
www.uspto.gov

E I DU PONT DE NEMOURS AND COMPANY
LEGAL PATENT RECORDS CENTER
BARLEY MILL PLAZA 25/1128
4417 LANCASTER PIKE
WILMINGTON, DE 19805

COPY MAILED
JUL 13 2006
OFFICE OF PETITIONS

In re Application of :
Ralph M. Aten :
Application No. 10/818,429 : ON PETITION
Filed: April 5, 2004 :
Attorney Docket No. FL0235USNA :

This is a decision on the petition, filed February 8, 2006, to revive the above-identified application under the provisions of 37 CFR 1.137(b).

The petition is **GRANTED**.

The application became abandoned for a failure to reply in a timely manner to the non-final Office action mailed July 1, 2005. This decision precedes the mailing of a Notice of Abandonment. On February 8, 2006, petitioner submitted the present petition, an amendment and a petition for extension of time.

The petition satisfies the requirements of 37 CFR 1.137(b) in that petitioner has supplied (1) the reply in the form of an amendment; (2) the petition fee of $1,500; and (3) the required statement of unintentional delay.

Extensions of time under 37 CFR 1.136 are available only if asked for prior to or with the response. In no case, however, may an applicant respond later than the maximum time period set by statute. Accordingly, if the question of abandonment arises when the provisions of 37 CFR 1.136 can no longer be used, then the application is abandoned when the unextended time for response has expired. Since, no extension of time fees are due on a petition for revival, the $1,020 extension fees are being credited to counsel's deposit account.

Telephone inquiries concerning this decision may be directed to the undersigned at (571) 272-3204. All other inquiries regarding this application should be directed to the Technology Center.

The application file is being forwarded to Technology Center AU 2661 for consideration of the amendment filed August 12, 2004.

Sherry D. Brinkley
Petitions Examiner
Office of Petitions

UNITED STATES PATENT AND TRADEMARK OFFICE

Commissioner for Patents
United States Patent and Trademark Office
P.O. Box 1450
Alexandria, VA 22313-1450
www.uspto.gov

RANDALL J. KNUTH P.C.
1507 YUMA CT
MUFREESBORO TN 37129

COPY MAILED

MAR 30 2007

OFFICE OF PETITIONS

In re Application of	:	
Dahlgren et al.	:	
Application No. 10/818,432	:	ON PETITION
Filed: April 5, 2004	:	
Attorney Docket No. DGL-4	:	

This is a decision on the petition under 37 C.F.R. § 1.137(b), filed December 4, 2006, to revive the above-identified application.

The petition is **GRANTED.**

The petition satisfies the conditions for revival pursuant to the provisions of 37 CFR 1.137(b) in that (1) the reply in the form of an Amendment; (2) the petition fee; and (3) the required statement of unintentional delay have been received. Accordingly, the response has been accepted as having been unintentionally delayed.

An extension of time under 37 CFR 1.136 must be filed prior to the expiration of the maximum extendable period for reply. See In re Application of S., 8 USPQ2d 1630, 1631 (Comm'r Pats. 1988). Accordingly, since the $510.00 extension of time fee submitted with the petition on December 4, 2006, was subsequent to the maximum extendable period for reply, this fee is unnecessary and will be credited to petitioner's deposit account as authorized.

This matter is being referred to Technology Center 3600 for further examination on the merits.

Telephone inquiries regarding this decision should be directed to the undersigned at (571) 272-3206.

Liana Walsh
Petitions Examiner
Office of Petitions

UNITED STATES PATENT AND TRADEMARK OFFICE

Commissioner for Patents
United States Patent and Trademark Office
P.O. Box 1450
Alexandria, VA 22313-1450
www.uspto.gov

BAKER & DANIELS LLP
300 NORTH MERIDIAN STREET
SUITE 2700
INDIANAPOLIS IN 46204

COPY MAILED

FEB 27 2008

OFFICE OF PETITIONS

In re Application of	:	
Dahlgren et al.	:	
Application No. 10/818,432	:	DECISION ON PETITION
Filed: April 5, 2004	:	
Attorney Docket No. ZOOM-P0001	:	

This is a decision on the petition under the unintentional provisions of 37 CFR 1.137(b), filed January 18, 2008, to revive the above-identified application.

The petition is **GRANTED**.

The petition satisfies the requirements of 37 CFR 1.137(b) in that petitioner has supplied (1) the reply in the form of a Request for Continued Examination (RCE) and an Amendment, (2) the petition fee, and (3) a proper statement of unintentional delay.

Since the petitioner was not the attorney of record at the time of abandonment, it is not apparent whether the statement of unintentional delay was signed by a person who would have been in a position of knowing that the entire delay in filing the required reply from the due date for the reply until the filing of a grantable petition pursuant to 37 CFR 1.137(b) was unintentional. Nevertheless, in accordance with 37 CFR 10.18, the statement is accepted as constituting a certification of unintentional delay. However, in the event that petitioner has no knowledge that the delay was unintentional, petitioner must make such an inquiry to ascertain that, in fact, the delay was unintentional. If petitioner discovers that the delay was intentional, petitioner must notify the Office.

Telephone inquiries concerning this decision should be directed to the undersigned at (571) 272-3206.

This matter is being referred to Technology Center 3661 for further examination on the merits.

Liana Walsh
Petitions Examiner
Office of Petitions

UNITED STATES PATENT AND TRADEMARK OFFICE

COMMISSIONER FOR PATENTS
UNITED STATES PATENT AND TRADEMARK OFFICE
P.O. BOX 1450
ALEXANDRIA, VA 22313-1450
www.uspto.gov

JJGJR.: 02-05

Paper No: __

DAVIS & BUJOLD, P.L.L.C.
FOURTH FLOOR
500 N. COMMERCIAL STREET
MANCHESTER NH 03101-1151

COPY MAILED

FEB 11 2005

OFFICE OF PETITIONS

In re Application of
Rothdach, et al. :
Application No. 10/818,438 : ON PETITION
Filed: 5 April, 2004 :
Attorney Docket No. LORWER P29AUS :

This is a decision on the petition under ¶(a) of 37 C.F.R. §1.47, filed on 21 December, 2004 and supplemented on 26 January and 10 February, 2005

The petition is **DISMISSED as moot**.

BACKGROUND

The record indicates:

- the application was filed on 5 April, 2004, without, *inter alia*, a fully executed oath or declaration; and
- on 18 June, 2004, the Office mailed a Notice to File Missing Parts;
- on 21 December, 2004, Petitioner Michael J. Bujold (Reg. No. 32,018), *inter alia*, with an oath/declaration partially signed with supporting documentation (in German and without a translation), however, that filing was supplemented with a copy of a fully executed oath/declaration filed on 26 January and resubmitted via FAX on 10 February, 2005;
- that supplement now evidences that all named inventors have signed the application.

In view of the joinder of the inventors, further consideration under Rule 1.47(a) is not necessary and the petition is considered to be moot. This application does not have any Rule 1.47 status and no such status should appear on the file wrapper. This application need not be returned to this Office for any further consideration under Rule 1.47(a).

CONCLUSION

For the foregoing reasons, the instant petition is **dismissed as moot for joinder**.

This application is being released to OIPE for further processing as necessary before being forwarded for examination in due course.

Telephone inquiries regarding this decision should be directed to the undersigned at (571) 272-3214.

John J. Gillon, Jr.
Senior Attorney
Office of Petitions

UNITED STATES PATENT AND TRADEMARK OFFICE

COMMISSIONER FOR PATENTS
UNITED STATES PATENT AND TRADEMARK OFFICE
P.O. BOX 1450
ALEXANDRIA, VA 22313-1450
www.uspto.gov

JJGJR.: 09-04

Paper No: __

TROUTMAN SANDERS LLP
BANK OF AMERICA PLAZA, SUITE 5200
600 PEACHTREE STREET , NE
ATLANTA GA 30308-2216

COPY MAILED

SEP 14 2004

OFFICE OF PETITIONS

In re Application of
Gow, et al. :
Application No. 10/818,439 : ON PETITION
Filed: 25 July, 2003 :
Attorney Docket No. HERB5.CIP :

This is a decision on the petition under ¶(a) of 37 C.F.R. §1.47, filed on 15 April, 2004

The Office regrets the delay in addressing this matter.

The petition is **GRANTED**.

BACKGROUND

The record indicates:

- the application was filed on 5 April, 2004, without, *inter alia*, a fully executed oath or declaration; and

- before the Office mailed on 28 June, 2004, a Notice to File Missing Parts with a reply due absent extension of time on or before Monday, 30 August, 2004, Petitioner filed on 15 April, 2004, the instant petition under 37 C.F.R. §1.47;

- with the instant 15 April, 2004, petition, Petitioner filed, *inter alia*, an oath/declaration signed by named co-inventors Robert Gow, John Pierce, and Brian Pierce, but without the signature

of co-inventor William Birdsall (Mr. Birdsall), a petition under 37 C.F.R. §1.47, and Petitioner's narrative of events with copies of redacted documents alleged to be Petitioner's letter to Mr. Birdsall and Mr. Birdsall's lack of response.

Lastly, Petitioner has submitted a declaration in compliance with 37 C.F.R. §1.63 and §1.64 and Petitioner has shown that such action is necessary to prevent irreparable damage.

This application and papers have been reviewed and found in compliance with 37 C.F.R. §1.47(a).

This application hereby is **ACCORDED status under 37 C.F.R. §1.47(a)**.

As provided under 37 C.F.R. §1.47(a), the Office will forward notice of this application's filing to the non-signing inventor at the address given in the petition.

Notice of the filing of this application also will be published in the Official Gazette.

This file is being returned to OIPE for processing as necessary to reflect the instant decision, and will be forwarded for further processing in due course.

Telephone inquiries concerning this decision may be directed to the undersigned at (703) 305-9199.

John J. Gillon, Jr.
Senior Attorney
Office of Petitions

UNITED STATES PATENT AND TRADEMARK OFFICE

COMMISSIONER FOR PATENTS
UNITED STATES PATENT AND TRADEMARK OFFICE
P.O. BOX 1450
ALEXANDRIA, VA 22313-1450
www.uspto.gov

JUL - 1 2005

In re Application of	:	
Brian Sanderson et al.	:	
Serial No. 10/818,458	:	DECISION ON PETITION
Filed: April 5, 2004	:	TO MAKE SPECIAL
For: BAG CARRYING DEVICE	:	

Applicants' petition, filed November 12, 2004, seeks to have this application made special pursuant to the Accelerated Examination Program. The petition is GRANTED.

The petition has been reviewed and is found to be in compliance with the requirements for special status as set forth in Section 708.02(VIII) of the Manual of Patent Examining Procedures (MPEP).

Applicant is advised that the examiner's search will be restricted to the subject matter encompassed by the claims. In the event that the application receives a first action rejection, applicant is encouraged to arrange for an interview with the examiner, and to provide the examiner with a working copy of any proposed amendment one working day prior to the interview. Any amendment filed in response to a first action rejection which would require broadening of the field of search will be treated as an improper response.

PETITION GRANTED.

Richard A. Bertsch

Richard A. Bertsch, Director
Technology Center 3700

Michael F. Krieger
Kirton and McConkie
1800 Eagle Gate Tower
60 East South Temple
Salt Lake City, UT 84111

UNITED STATES PATENT AND TRADEMARK OFFICE

Commissioner for Patents
United States Patent and Trademark Office
P.O. Box 1450
Alexandria, VA 22313-1450
www.uspto.gov

7/20/07

GREGORY L BRADLEY
MEDRAD INC
ONE MEDRAD DRIVE
INDIANOLA PA 15051

In re Application of:
SCHRIVER, RALPH H. et al.
Serial No.: 10/818,477
Filed: Apr. 5, 2004
Docket: CV/02-014.CIP
Title: FLUID INJECTION APPARATUS WITH FRONT LOAD PRESSURE JACKET, LIGHT ILLUMINATION, AND SYRINGE SENSING

DECISION ON PETITION

This is a decision on the petition filed on Jan. 3, 2007 by which petitioner requests reconsideration and withdrawal of the restriction requirement mailed Aug. 15, 2006, and that non-elected claims 1, 3-46, 72-85 and 88-95 be rejoined and examined on the merits. Claims 47 and 49-61 were elected for prosecution. This petition is being considered pursuant to 37 CFR 1.144 and 37 CFR 1.181, and no fee is required.

The petition is **DISMISSED**.

A review of the record reveals that a restriction requirement was made between four disclosed and claimed related inventions: I) claims 1, 3-42 and 88-95, an injection device with pressure jacket and light source, II) claims 47 and 49-61, a syringe with an expandable body section, III) claims 72-85, an anti-rotation connection, and IV) claims 43-46, a pressure jacket.

In judging the propriety of the restriction requirement, the related inventions, as claimed, must be shown to be distinct in accordance with MPEP 802.01. As the examiner indicated in the restriction requirement of Aug. 15, 2006, the inventions in groups I and II are directed to related products; the inventions in groups I and III are directed to related products and the inventions in groups II and III are directed to related products. These related inventions can be shown to be distinct if the inventions as claimed do not overlap in scope, i.e., are mutually exclusive; the inventions as claimed are not obvious variants; and the inventions as claimed are either not capable of use together or can have a materially different design, mode of operation, function, or effect. See MPEP 806.05(j). The inventions in groups I and IV are related as combination and subcombination. Inventions in this relationship are distinct if it can be shown that (1) the

combination as claimed does not require the particulars of the subcombination as claimed for patentability, and (2) that the subcombination has utility by itself or in other combinations (MPEP 806.05(c)).

In the instant application, the distinctness between the claimed inventions was justified in that the syringe of group II can be used without the injection device of group I, for example without the additional light, pressure jacket, or sensor structure. The anti-rotation structure of group III is not required for the function of group I. The expandable syringe structure of group II is not required for the anti-rotation connection of group III. Finally, group IV does not require the particulars of group I as claimed because the combination does not require the "body formed of substantially clear plastic" and the body "adapted to diffuse light". In addition, group I has separate utility such as use without the light source associated with the housing or pressure jacket.

Petitioner does not traverse the rationale set forth above by the examiner that the inventions are independent or distinct as claimed. However, on page 2, lines 24-26 of the petition, petitioner does argue that "Accordingly, even if the application includes inventions that are independent or distinct as claimed, the examiner must show that there is a serious burden if restriction is not required".

As part of any restriction requirement, the search and examination for each of the four claimed inventions must be considered a serious burden on the examiner if restriction were not required. See MPEP 803 and 808.02. Aside from the different classifications indicated in the requirement, the search for the injection device would involve areas such as surgery devices for collecting liquid, for example class 128, which are diverse from the search for a syringe with an expandable body section and vice versa. Similarly, the search for the anti-rotation connection of group III would involve areas where connections are found, for example, class 403, which are diverse from the search for a syringe. Finally, the search for the pressure jacket would involve areas such as containers in class 220, which are diverse from the search for a syringe. In addition, different search queries would have to be employed for each respective group. For example, the application record shows that the examiner employed the search query "expandable barrel syringe" which is not required for the other groups.

It is clear from the record that the examiner has demonstrated that a serious burden exists in examining all of the claims together. Petitioner's argument that the Apr. 10, 2006 amendment only provided clarifying language to one or more of the independent claims and therefore relieved the examiner of certain examining burdens rather than developing further burdens is not convincing. The record shows that the currently pending claims were substantially amended in the Jan. 3, 2007 response, thus changing the scope of the invention. The examiner will now have to consider new limitations and accordingly formulate a new field of search and search query strategy to address the newly added limitations. Therefore, contrary to applicant's arguments, further examining burdens have been developed.

Conclusion

For the reasons outlined above, the restriction requirement promulgated in the restriction requirement dated Aug. 15, 2006 is in accordance with proper Office procedure. Accordingly, the Office action stands.

The application is being forwarded to Supervisory Patent Examiner of Art Unit 3767 for further processing. Any request for reconsideration of this decision must be submitted within TWO (2) MONTHS from the mail date of this decision, 37 CFR 1.181(f). No extension of time under 37 CFR 1.136(a) is permitted. The reconsideration request should include a cover letter entitled "Renewed Petition under 37 CFR 1.181". Any inquiry regarding this decision should be directed to Marc Jimenez, Training Quality Assurance Specialist, at (571) 272-4530.

The petition is DISMISSED.

Frederick R. Schmidt, Director
Technology Center 3700

SPE RESPONSE FOR CERTIFICATE OF CORRECTION

Paper No.: _____

DATE : April 05, 2007

TO SPE OF : ART UNIT 2627 10/818488

SUBJECT : Request for Certificate of Correction on Patent No.: 7145752 B2

A response is requested with respect to the accompanying request for a certificate of correction.

Please complete this form and return with file, within 7 days to:
Palm location **7580, Certificates of Correction Branch – South Tower – 9A22**
If response is for an IFW, **return to employee (named below) via PUBSCofC Team in MADRAS.**
With respect to the change(s) requested, correcting Office and/or Applicant's errors, should the patent read as shown in the certificate of correction (COCIN)? No new matter should be introduced, nor should the scope or meaning of the claims be changed.

Thank You For Your Assistance

Elisha Evans
Certificates of Correction Branch
Tel. No. 703-308-9390 EXT 110

The request for issuing the above-identified correction(s) is hereby:
Note your decision on the appropriate box.

- ☒ **Approved** — All changes apply.
- ☐ **Approved in Part** — Specify below which changes **do not** apply.
- ☐ **Denied** — State the reasons for denial below.

Comments:

Changes are merely clerical in nature and do not effect the scope of the claims.

Craig A. Renner
CRAIG A. RENNER
PRIMARY EXAMINER

8/30/07.
SPE

2627
Art Unit

UNITED STATES PATENT AND TRADEMARK OFFICE

Commissioner for Patents
United States Patent and Trademark Office
P.O. Box 1450
Alexandria, VA 22313-1450
www.uspto.gov

HASSE & NESBITT LLC
8837 CHAPEL SQUARE DRIVE
SUITE C
CINCINNATI OH 45249

COPY MAILED

MAR 0 4 2008

OFFICE OF PETITIONS

In re Application of

JOHNSON, Arthur A.
Application No. 10/818,537
Filed: April 05, 2004
Attorney Docket No. **AAJ-001**

DECISION ON PETITION
TO WITHDRAW
FROM RECORD

This is a decision on the Request to Withdraw as attorney or agent of record under 37 C.F.R. § 1.36(b), filed January 30, 2007.

The request is **NOT APPROVED**.

A grantable request to withdraw as attorney/agent of record must be signed by every attorney/agent seeking to withdraw or contain a clear indication that one attorney is signing on behalf of another/others. A request to withdraw will not be approved unless at least 30 (thirty) days would remain between the date of approval and the later of the expiration date of a time to file a response or the expiration date of the maximum time period which can be extended under 37 C.F.R. § 1.136(a).

The Office cannot approve the request at this time since the reasons provided do not meet any of the conditions under the mandatory or permissive categories enumerated in 37 CFR 10.40. Section 10.40 of Title 37 of the Code of Federal Regulation states, "[a] practitioner shall not withdraw from employment in a proceeding before the Office without permission from the Office[.]" More specifically, 37 CFR 10.40 states, "[i]f paragraph (b) of this section is not applicable, a practitioner may not request permission to withdraw in matter pending before the Office unless such request or such withdrawal is" for one the permissive reasons listed in 37 CFR 10.40(c). The reasons set forth in the request, client previously selected Jagtiani & Guttag to prosecute application, does not meet any of the conditions set forth in 37 CFR 10.40.

All future communications from the Office will continue to be directed to the above-listed address until otherwise notified by applicant.

Telephone inquiries concerning this decision should be directed to Tredelle Jackson at 571-272- 2783.

Monica A. Graves
Petitions Examiner
Office of Petitions

cc: **ARTHUR A. JOHNSON**
2457 STONEY GLEN DRIVE
ORANGE PARK, FL 32003

UNITED STATES PATENT AND TRADEMARK OFFICE

Commissioner for Patents
United States Patent and Trademark Office
P.O. Box 1450
Alexandria, VA 22313-1450
www.uspto.gov

HASSE & NESBITT LLC
8837 CHAPEL SQUARE DRIVE
SUITE C
CINCINNATI OH 45249

COPY MAILED

MAR 0 4 2008

OFFICE OF PETITIONS

In re Application of	:	
JOHNSON, Arthur A.	:	
Application No. 10/818,537	:	DECISION ON PETITION
Filed: April 05, 2004	:	TO WITHDRAW
Attorney Docket No. **AAJ-001**	:	FROM RECORD

This is a decision on the Request to Withdraw as attorney or agent under 37 C.F.R. § 1.36(b) or 37 C.F.R. § 10.40 filed January 24, 2007.

The request is **NOT APPROVED**.

A review of the file record indicates that Eric W. Guttag of JAGTIANI & GUTTAG does not have power of attorney in this patent application nor is there any statement or evidence of record of employment in or otherwise being engaged in the proceedings in this patent application. Accordingly, the request to withdraw under 37 C.F.R. § 1.36(b) is not applicable.

All future communications from the Office will continue to be directed to the below-listed address until otherwise properly notified by the applicant.

Telephone inquires concerning this decision should be directed to Tredelle Jackson at 571-272-2783.

Monica A. Graves
Petitions Examiner
Office of Petitions

cc: **ARTHUR A. JOHNSON**
2457 STONEY GLEN DRIVE
ORANGE PARK, FL 32003

UNITED STATES PATENT AND TRADEMARK OFFICE

Commissioner for Patents
United States Patent and Trademark Office
P.O. Box 1450
Alexandria, VA 22313-1450
www.uspto.gov

ORUM & ROTH
53 W. JACKSON BLVD
CHICAGO IL 60604

COPY MAILED
OCT 0 3 2006
OFFICE OF PETITIONS

In re Application of	:	
Gunther Lothar Schulze	:	
Application No. 10/818,551	:	DECISION ON PETITION
Filed: April 5, 2004	:	TO WITHDRAW
Attorney Docket No. 13811	:	FROM RECORD
	:	

This is a decision on the Request to Withdraw as attorney or agent of record under 37 C.F.R. § 1.36(b), filed July 16, 2006.

The request is **APPROVED**.

A grantable request to withdraw as attorney/agent of record must be signed by every attorney/agent seeking to withdraw or contain a clear indication that one attorney is signing on behalf of another/others. A request to withdraw will not be approved unless at least 30 (thirty) days would remain between the date of approval and the later of the expiration date of a time to file a response or the expiration date of the maximum time period which can be extended under 37 C.F.R. § 1.136(a).

The request was signed by Catherine L. Glemrich attorney/agent of record on behalf of herself.

Catherine L. Glemrich has been withdrawn as attorney or agent of record; all other attorneys remain of record.

All future communications from the Office will continue to be directed to the above-listed address until otherwise properly notified by the applicant.

Telephone inquiries concerning this decision should be directed to Charles Smoot at 571-272-3299.

for David Bucci
Petitions Examiner
Office of Petitions

UNITED STATES PATENT AND TRADEMARK OFFICE

Commissioner for Patents
United States Patent and Trademark Office
P.O. Box 1450
Alexandria, VA 22313-1450
www.uspto.gov

John C. McMahon
PO Box 30069
Kansas City MO 64112

COPY MAILED

SEP 22 2006

OFFICE OF PETITIONS

In re Application of
Roger Jackson
Application No. 10/818,554
Filed: April 5, 2004
Attorney Docket No. 10,401

DECISION ON PETITION
UNDER 37 CFR 1.78(a)(3)

This is a decision on the petition under 37 CFR 1.78(a)(3), filed June 19, 2006, to accept an unintentionally delayed claim under 35 U.S.C. § 120 for the benefit of priority to the prior-filed nonprovisional applications set forth in the amendment filed with the petition.

The petition is **GRANTED**.

A petition for acceptance of a claim for late priority under 37 CFR 1.78(a)(3) is only applicable to those applications filed on or after November 29, 2000. Further, the petition is appropriate only after the expiration of the period specified in 37 CFR 1.78(a)(2)(ii). In addition, the petition under 37 CFR 1.78(a)(3) must be accompanied by:

(1) the reference required by 35 U.S.C. § 120 and 37 CFR 1.78(a)(2)(i) of the prior-filed application, unless previously submitted;
(2) the surcharge set forth in § 1.17(t); and
(3) a statement that the entire delay between the date the claim was due under 37 CFR 1.78(a)(2)(ii) and the date the claim was filed was unintentional. The Director may require additional information where there is a question whether the delay was unintentional.

All of the above requirements having been satisfied, the late claim for priority under 35 U.S.C. § 120 is accepted as being unintentionally delayed.

The granting of the petition to accept the delayed benefit claim to the prior-filed applications under 37 CFR 1.78(a)(3) should not be construed as meaning that this application is entitled to the benefit of the prior-filed applications. In order for this application to be entitled to the benefit of the prior-filed applications, all other requirements under 35 U.S.C. § 120 and 37 CFR 1.78(a)(1) and (a)(2) must be met. Similarly, the fact that the corrected Filing Receipt accompanying this decision on petition includes the prior-filed applications should not be

construed as meaning that applicant is entitled to the claim for benefit of priority to the prior-filed applications noted thereon. Accordingly, the examiner will, in due course, consider this benefit claim and determine whether the application is entitled to the benefit of the earlier filing date.

Although petitioner included a reference to application numbers 10/464,633 and 10/651,003 in the ADS and declaration on filing, the references were not recognized because applicant failed to indicate the relationship between the nonprovisional applications. Thus, a petition under 37 CFR 1.78 (a)(3) was required.[1]

A corrected Filing Receipt, which includes the priority claim to the prior-filed nonprovisional applications, accompanies this decision on petition.

Any inquiries concerning this decision may be directed to Charlema Grant at (571) 272-3215. All other inquiries concerning either the examination procedures or status of the application should be directed to the Technology Center.

This application is being forwarded to Technology Center Art Unit 3738 for consideration by the examiner of applicant's entitlement to claim benefit of priority under 35 U.S.C. § 120 to the prior-filed applications.

Frances Hicks
Petitions Examiner
Office of Petitions

ATTACHMENT: Corrected Filing Receipt

[1] *Note* MPEP 201.11 (III)(D) and 66 Federal Register 67087 at 67089 (Dec. 28, 2001), effective December 28, 2001.

UNITED STATES PATENT AND TRADEMARK OFFICE

UNITED STATES DEPARTMENT OF COMMERCE
United States Patent and Trademark Office
Address: COMMISSIONER FOR PATENTS
P.O. Box 1450
Alexandria, Virginia 22313-1450
www.uspto.gov

APPL NO.	FILING OR 371 (c) DATE	ART UNIT	FIL FEE REC'D	ATTY.DOCKET NO	DRAWINGS	TOT CLMS	IND CLMS
10/818,554	04/05/2004	3738	2222	10,401	7	24	8

CONFIRMATION NO. 3995
CORRECTED FILING RECEIPT
OC000000020470744
OC000000020470744

John C. McMahon
PO Box 30069
Kansas City, MO 64112

Date Mailed: 09/18/2006

Receipt is acknowledged of this regular Patent Application. It will be considered in its order and you will be notified as to the results of the examination. Be sure to provide the U.S. APPLICATION NUMBER, FILING DATE, NAME OF APPLICANT, and TITLE OF INVENTION when inquiring about this application. Fees transmitted by check or draft are subject to collection. Please verify the accuracy of the data presented on this receipt. **If an error is noted on this Filing Receipt, please mail to the Commissioner for Patents P.O. Box 1450 Alexandria Va 22313-1450. Please provide a copy of this Filing Receipt with the changes noted thereon. If you received a "Notice to File Missing Parts" for this application, please submit any corrections to this Filing Receipt with your reply to the Notice. When the USPTO processes the reply to the Notice, the USPTO will generate another Filing Receipt incorporating the requested corrections (if appropriate).**

Applicant(s)

Roger P. Jackson, Prairie Village, KS;

Power of Attorney:

John McMahon--29415

Domestic Priority data as claimed by applicant

This application is a CON of 10/464,633 06/18/2003 PAT 6,716,214
and is a CIP of 10/651,003 08/28/2003

Foreign Applications

If Required, Foreign Filing License Granted: 06/17/2004

The country code and number of your priority application, to be used for filing abroad under the Paris Convention, is US10/818,554

Projected Publication Date: Not Applicable

Non-Publication Request: No

Early Publication Request: No

Title

Upload shank swivel head bone screw spinal implant

Preliminary Class
606

PROTECTING YOUR INVENTION OUTSIDE THE UNITED STATES

Since the rights granted by a U.S. patent extend only throughout the territory of the United States and have no effect in a foreign country, an inventor who wishes patent protection in another country must apply for a patent in a specific country or in regional patent offices. Applicants may wish to consider the filing of an international application under the Patent Cooperation Treaty (PCT). An international (PCT) application generally has the same effect as a regular national patent application in each PCT-member country. The PCT process **simplifies** the filing of patent applications on the same invention in member countries, but **does not result** in a grant of "an international patent" and does not eliminate the need of applicants to file additional documents and fees in countries where patent protection is desired.

Almost every country has its own patent law, and a person desiring a patent in a particular country must make an application for patent in that country in accordance with its particular laws. Since the laws of many countries differ in various respects from the patent law of the United States, applicants are advised to seek guidance from specific foreign countries to ensure that patent rights are not lost prematurely.

Applicants also are advised that in the case of inventions made in the United States, the Director of the USPTO must issue a license before applicants can apply for a patent in a foreign country. The filing of a U.S. patent application serves as a request for a foreign filing license. The application's filing receipt contains further information and guidance as to the status of applicant's license for foreign filing.

Applicants may wish to consult the USPTO booklet, "General Information Concerning Patents" (specifically, the section entitled "Treaties and Foreign Patents") for more information on timeframes and deadlines for filing foreign patent applications. The guide is available either by contacting the USPTO Contact Center at 800-786-9199, or it can be viewed on the USPTO website at http://www.uspto.gov/web/offices/pac/doc/general/index.html.

For information on preventing theft of your intellectual property (patents, trademarks and copyrights), you may wish to consult the U.S. Government website, http://www.stopfakes.gov. Part of a Department of Commerce initiative, this website includes self-help "toolkits" giving innovators guidance on how to protect intellectual property in specific countries such as China, Korea and Mexico. For questions regarding patent enforcement issues, applicants may call the U.S. Government hotline at 1-866-999-HALT (1-866-999-4158).

LICENSE FOR FOREIGN FILING UNDER
Title 35, United States Code, Section 184
Title 37, Code of Federal Regulations, 5.11 & 5.15

GRANTED

The applicant has been granted a license under 35 U.S.C. 184, if the phrase "IF REQUIRED, FOREIGN FILING LICENSE GRANTED" followed by a date appears on this form. Such licenses are issued in all applications where the conditions for issuance of a license have been met, regardless of whether or not a license may be required as set forth in 37 CFR 5.15. The scope and limitations of this license are set forth in 37 CFR 5.15(a) unless an earlier license has been issued under 37 CFR 5.15(b). The license is subject to revocation upon written notification. The date indicated is the effective date of the license, unless an earlier license of similar scope has been granted under 37 CFR 5.13 or 5.14.

This license is to be retained by the licensee and may be used at any time on or after the effective date thereof unless it is revoked. This license is automatically transferred to any related applications(s) filed under 37 CFR 1.53(d). This license is not retroactive.

The grant of a license does not in any way lessen the responsibility of a licensee for the security of the subject

matter as imposed by any Government contract or the provisions of existing laws relating to espionage and the national security or the export of technical data. Licensees should apprise themselves of current regulations especially with respect to certain countries, of other agencies, particularly the Office of Defense Trade Controls, Department of State (with respect to Arms, Munitions and Implements of War (22 CFR 121-128)); the Bureau of Industry and Security, Department of Commerce (15 CFR parts 730-774); the Office of Foreign Assets Control, Department of Treasury (31 CFR Parts 500+) and the Department of Energy.

NOT GRANTED

No license under 35 U.S.C. 184 has been granted at this time, if the phrase "IF REQUIRED, FOREIGN FILING LICENSE GRANTED" DOES NOT appear on this form. Applicant may still petition for a license under 37 CFR 5.12, if a license is desired before the expiration of 6 months from the filing date of the application. If 6 months has lapsed from the filing date of this application and the licensee has not received any indication of a secrecy order under 35 U.S.C. 181, the licensee may foreign file the application pursuant to 37 CFR 5.15(b).

UNITED STATES PATENT AND TRADEMARK OFFICE

Commissioner for Patents
United States Patent and Trademark Office
P.O. Box 1450
Alexandria, VA 22313-1450
www.uspto.gov

STEFAN V. CHMIELEWSKI
DELPHI TECHNOLOGIES, INC.
LEGAL STAFF MC CT10C
P. O. BOX 9005
KOKOMO, IN 46904-9005

COPY MAILED

MAY 01 2007

OFFICE OF PETITIONS

In re Application of	:	
Louis L. Nagy	:	
Application No. 10/818,559	:	DECISION GRANTING PETITION
Filed: April 5, 2004	:	UNDER 37 CFR 1.137(b)
Attorney Docket No. DP-309797	:	

This is a decision on the petition under 37 CFR 1.137(b), filed February 21, 2007, to revive the above-identified application.

The petition is **GRANTED**.

The above-identified application became abandoned for failure to reply in a timely manner to the non-final Office action mailed August 2, 2006, which set a shortened statutory period for reply of three (3) months. No extensions of time under the provisions of 37 CFR 1.136(a) were obtained. Accordingly, the above-identified application became abandoned on November 3, 2006.

The petition satisfies the conditions for revival pursuant to the provisions of 37 CFR 1.137(b) in that (1) the reply, (2) the $1,500 petition fee, and (3) the required statement of unintentional delay have been received. Accordingly, the reply to the non-final Office action of August 2, 2006 is accepted as having been unintentionally delayed.

The application file does not indicate a change of address has been filed in this case, although the address given on the petition differs from the address of record. If appropriate, a change of address should be filed in this case in accordance with MPEP 601.03. A courtesy copy of this decision is being mailed to the address noted on the petition. However, until otherwise instructed, all future correspondence regarding this application will be mailed solely to the above-noted address of record.

Telephone inquiries concerning this decision should be directed to the undersigned at (571) 272-3218.

This matter is being referred to Technology Center AU 2631 for appropriate action in the normal course of business on the reply received February 21, 2007.

Frances Hicks
Petitions Examiner
Office of Petitions

cc:

J. Gordon Lewis
Delphi Technologies, Inc.
P. O. Box 5052, M/C 480-410-202
Troy, MI 48007-5052

UNITED STATES PATENT AND TRADEMARK OFFICE

UNITED STATES DEPARTMENT OF COMMERCE
United States Patent and Trademark Office
Address: COMMISSIONER FOR PATENTS
P.O. Box 1450
Alexandria, Virginia 22313-1450
www.uspto.gov

PANITCH SCHWARZE BELISARIO & NADEL LLP
ONE COMMERCE SQUARE
2005 MARKET STREET, SUITE 2200
PHILADELPHIA, PA 19103

Mail Date: 04/20/2010

Applicant	: Naohiro Kimura	: DECISION ON REQUEST FOR
Patent Number	: 7584315	: RECALCULATION of PATENT
Issue Date	: 09/01/2009	: TERM ADJUSTMENT IN VIEW
Appliction No	: 10/818,568	: OF WYETH AND NOTICE OF INTENT TO
Filed	: 04/06/2004	: ISSUE CERTIFICATE OF CORRECTION
		:

The Request for Recalculation is **GRANTED** to the extent indicated.

The patent term adjustment has been determined to be **1542** days. The USPTO will *sua sponte* issue a certificate of correction reflecting the amount of PTA days determined by the recalculation.

Prior to the issuance of the certificate of correction, the USPTO will afford patentee an opportunity to be heard and request reconsideration. Accordingly, patentee has **one month or thirty (30) days**, whichever is longer, to file a request for reconsideration of this patent term adjustment calculation. See 35 U.S.C. 154(b)(3)(B)(ii) and 37 CFR 1.322(a)(4). No extensions of time will be granted under 37 CFR 1.136.

Patentee should use document code PET.OP if electronically filing a request for reconsideration of this patent term adjustment calculation. The patentee must also include the information required by 37 CFR 1.705(b)(2) and the fee required by 37 CFR 1.18(e). If patentee does not file a timely request for reconsideration of this patent term adjustment calculation including the information required by 37 CFR 1.705(b)(2) and the fee required by 37 CFR 1.18(e), the USPTO will issue a certificate of correction reflecting the PTA determination noted above.

Patentee should be aware that in order to preserve the right to review in the United States District Court for the District of Columbia of the USPTO patent term adjustment determination, patentee must ensure that he or she also take the steps required under 35 U.S.C. 154(b)(4)(A) in a timely manner. Nothing in the request for recalculation should be construed as providing an alternative time frame for commencing a civil action under 35 U.S.C. 154(b)(4)(A).

Any questions concerning this decision should be directed to the Office of Patent Legal Administration at 571-272-7702.

UNITED STATES PATENT AND TRADEMARK OFFICE

Commissioner for Patents
United States Patent and Trademark Office
P.O. Box 1450
Alexandria, VA 22313-1450
www.uspto.gov

COPY MAILED

JUN 0 5 2008

OFFICE OF PETITIONS

TROP PRUNER & HU, PC
1616 S. VOSS ROAD, SUITE 750
HOUSTON TX 77057-2631

In re Application of Rothman et al. :
Application No. 10/818,608 : Decision on Petition
Filing Date: April 6, 2004 :
Attorney Docket No. ITL.1148US (P19242) :

This is a decision on the petition under 37 CFR 1.181, filed January 30, 2008, to withdraw the holding of abandonment.

The petition is **granted.**

A final Office action was mailed June 21, 2007. The Office action set a three-month shortened statutory period for reply. Accordingly, a reply was due on or before September 21, 2007.

The Office did not receive a reply to the final Office action. On January 28, 2008, the examiner called petitioner to discover if any reply had been filed in response to the final Office action.

Petitioner states a reply was not filed in response to the final Office action because the Office action was not received. Petitioner requests the Office withdraw the holding of abandonment.

The evidence supplied by petitioner is sufficient to demonstrate non-receipt of the June 21, 2007 final Office action. Therefore, the petition is granted.

The final Office mailed June 21, 2007 final Office action is hereby vacated.

Technology Center Art Unit 2187 will be informed of the instant decision and, since the June 21, 2007 final Office action has been vacated, the amendment filed with the petition will be treated as a supplemental amendment.

Telephone inquiries regarding this communication should be directed to Petitions Attorney Steven Brantley at (571) 272-3203.

Charles Steven Brantley
Senior Petitions Attorney
Office of Petitions

10-20-04

IFW

FILE COPY

OIPE JC185
OCT 19 2004
PATENT & TRADEMARK OFFICE

IN THE UNITED STATES PATENT AND TRADEMARK OFFICE

In re Application of:	)	
Duhane Lam, Gerard Francis McLean,	)	
Olen Richard Vanderleeden	)	**Group Art Unit:** 1763
Serial No.: 10/818,610	)	
Filed: April 6, 2004	)	
For: Compact Chemical Reactor with Reactor Frame	)	

PETITION GRANTED

William Krynski
Special Program Examiner
TC 1700
2-10-05

Mail Stop Petition
Commissioner for Patents
P.O. Box 1450
Alexandria, VA 22313-1450

Certificate of Express Mail

I hereby certify that this correspondence is being deposited with the United States Postal Service as "Express Mail Post Office to Addressee" Express Mail No. ER 896 593 675 US in an envelope addressed to MAIL STOP PETITION; Commissioner for Patents; PO Box 1450; Alexandria, VA, 22313-1450, on the following date: October 19, 2004.

Christian Heausler

Christian Heausler

PETITION TO MAKE SPECIAL UNDER 37 C.F.R. § 1.102(C)

Applicants hereby petition the Commissioner pursuant to 37 C.F.R. § 1.102(c) to accord "special status" to the above-identified patent application for the reasons set forth below. Applicants believe that no fee is due in connection with this petition. The basis for this petition (in accordance with MPEP §708.02 V and VI) is that the Applicants' present embodiments materially enhance the quality of the environment and materially contribute to the development or conservation of energy resources.

10/22/2004 AWONDAF1 00000035 501313 10818610
01 FC:1460 130.00 DA

OIPE JC185
OCT 19 2004
PATENT & TRADEMARK OFFICE

10-20-04

FILE COPY

IN THE UNITED STATES PATENT AND TRADEMARK OFFICE

In re Application of:	)	
Duhane Lam, Gerard Francis McLean,	)	
Olen Richard Vanderleeden	)	**Group Art** 16
Serial No.: 10/818,611	)	
Filed: April 6, 2004	)	**Examiner:** Not Assigned
For: Compact Fuel Cell Layer	)	

PETITION GRANTED

William Krynski
Special Program Examiner
TC 1700
2-10-05

Mail Stop Petition
Commissioner for Patents
P.O. Box 1450
Alexandria, VA 22313-1450

Certificate of Express Mail

I hereby certify that this correspondence is being deposited with the United States Postal Service as "Express Mail Post Office to Addressee" Express Mail No. **ER 896 593 698 US** in an envelope addressed to MAIL STOP PETITION; Commissioner for Patents; PO Box 1450; Alexandria, VA, 22313-1450, on the following date: October 19, 2004.

Christian Heausler

Christian Heausler

PETITION TO MAKE SPECIAL UNDER 37 C.F.R. § 1.102(C)

Applicants hereby petition the Commissioner pursuant to 37 C.F.R. § 1.102(c) to accord "special status" to the above-identified patent application for the reasons set forth below. Applicants believe that no fee is due in connection with this petition. The basis for this petition (in accordance with MPEP §708.02 V and VI) is that the Applicants' present embodiments materially enhance the quality of the environment and materially contribute to the development or conservation of energy resources.

0/22/2004 AWONDAF1 00000032 501313 10818611
1 FC:1460 130.00 DA

10-20-04

FILE COPY

OIPE JC185
OCT 1 9 2004
PATENT & TRADEMARK OFFICE

IN THE UNITED STATES PATENT AND TRADEMARK OFFICE

In re Application of:	)	
Duhane Lam, Gerard Francis McLean,	)	
Olen Richard Vanderleeden	)	Group Art Unit: 1745
Serial No.: 10/818,612	)	
Filed: April 6, 2004	)	
For: Method for Forming Compact	)	
Chemical Reactors with Reactor Frames	)	

PETITION GRANTED

William Krynski
Special Program Examiner
TC 1700
2-10-05

Mail Stop Petition
Commissioner for Patents
P.O. Box 1450
Alexandria, VA 22313-1450

Certificate of Express Mail

I hereby certify that this correspondence is being deposited with the United States Postal Service as "Express Mail Post Office to Addressee" Express Mail No. ER 896 678 711 US in an envelope addressed to MAIL STOP PETITION; Commissioner for Patents; PO Box 1450; Alexandria, VA, 22313-1450, on the following date: October 19, 2004.

Christian Heausler

Christian Heausler

PETITION TO MAKE SPECIAL UNDER 37 C.F.R. § 1.102(C)

Applicants hereby petition the Commissioner pursuant to 37 C.F.R. § 1.102(c) to accord "special status" to the above-identified patent application for the reasons set forth below. Applicants believe that no fee is due in connection with this petition. The basis for this petition (in accordance with MPEP §708.02 V and VI) is that the Applicants' present embodiments materially enhance the quality of the environment and materially contribute to the development or conservation of energy resources.

10/22/2004 AWONDAF1 00000031 501313 10818612
01 FC:1460 130.00 DA

UNITED STATES PATENT AND TRADEMARK OFFICE

Commissioner for Patents
United States Patent and Trademark Office
P.O. Box 1450
Alexandria, VA 22313-1450
www.uspto.gov

Thrasher Associates, LLC
391 Sandhill Dr.
Richardson TX 75080

COPY MAILED

APR 0 7 2008

OFFICE OF PETITIONS

In re Application of :
Richard A. SMITH :
Application No. 10/818,621 : DECISION ON PETITION
Filed: April 5, 2004 :
Attorney Docket No. 19003.00013 :

This is a decision on the petition under the unintentional provisions of 37 CFR 1.137(b), filed January 31, 2008, to revive the above-identified application.

The petition is **GRANTED**.

This application became abandoned for failure to timely pay the issue and publication fees on or before November 20, 2007, as required by the Notice of Allowance and Fee(s) Due, mailed August 20, 2007. Accordingly, the date of abandonment of this application is November 21, 2007.

The petition satisfies the requirements of 37 CFR 1.137(b) in that petitioner has supplied (1) the reply in the form of payment of the issue fee of $720 and the publication fee of $300, (2) the petition fee of $770; and (3) a proper statement of unintentional delay.

Telephone inquiries concerning this decision should be directed to Quyen Leung at (571) 272-6051, or in her absence, the undersigned at (571) 272-7099.

This application is being referred to Publishing Division for processing into a patent.

for David A. Bucci
Petitions Examiner
Office of Petitions

UNITED STATES PATENT AND TRADEMARK OFFICE

Commissioner for Patents
United States Patent and Trademark Office
P.O. Box 1450
Alexandria, VA 22313-1450
www.uspto.gov

TOWNSEND AND TOWNSEND AND CREW, LLP
TWO EMBARCADERO CENTER
EIGHTH FLOOR
SAN FRANCISCO CA 94111-3834

MAILED

AUG 17 2009

OFFICE OF PETITIONS

In re Application of	:	
Lincoln McBride et al.	:	DECISION
Application No. 10/818,642	:	AMENDING INVENTORSHIP
Filed: April 5, 2004	:	
Attorney Docket No. 020174-010820US	:	

This is a decision on the petitions, filed June 4, 2009, under 37 CFR §§ 1.48(a) and 1.183 to waive the requirement of 37 CFR 1.64 that the non-signing original inventor re-execute the supplemental declaration and correct the inventorship of the above-noted application.

The petitions are **GRANTED.**

The petition under 37 CFR 1.48(a) includes a request to correct the inventorship that sets forth the desired inventorship change, statements from each person being added as an inventor that the error in inventorship occurred without deceptive intention on his part, authorization to charge the processing fee set forth in § 1.17(i) to a Deposit Account, and the written consent of the assignee to the correction.

In regard to the required declaration by the actual inventors, petitioner has requested that the supplemental declaration be accepted without the signature of Lincoln McBride who signed the original declaration. On very infrequent occasions, the requirements of 37 CFR 1.64 have been waived upon the filing of a request and the fee set forth in § 1.17(f) for a petition under 37 CFR 1.183 (along with the supplemental oath or declaration) to permit the acceptance of that supplemental oath or declaration signed by less than all the originally signing named inventors. Petitions under 37 CFR 1.47 are only applicable to the initial execution of an original oath or declaration by a given inventor and are not applicable to the re-execution of another or supplemental oath or declaration by that originally signing inventor. In such circumstances, the USPTO will consider a petition under 37 CFR 1.183 requesting waiver of the requirement of 37 CFR 1.64 that each of the actual inventors execute the supplemental oath or declaration, particularly where assignee consent is given to the requested correction. Absent assignee consent, the petition under 37 CFR 1.183 requesting waiver of the re-execution of the oath or declaration will be evaluated as to whether the non-signing inventor was actually given the opportunity to re-execute the oath or declaration, or whether the non-signing inventor could not be reached.

Here, petitioner submits that the signature of originally-named inventor Lincoln McBride could not be obtained. This is accompanied by the assignee's written consent to the requested change. From this statement and assignee's consent, the signature requirement is hereby waived. Also, the fees set forth in

§§ 1.17(i) and (f) for a petitions under 37 CFR 1.48(a) and 37 CFR 1.183, respectively, have been charged to Deposit Account No. 20-1430 as authorized.

In view of the papers filed June 4, 2009, it has been found that this nonprovisional application, as filed, through error and without deceptive intent, failed to properly set forth the inventorship. Accordingly, the inventorship has been corrected in compliance with 37 CFR 1.48(a). The inventorship has been changed by the addition of Yong Yi of Burlingame, California.

This application is being referred to the Office of Data Management for processing.

Telephone inquiries regarding this decision should be directed to the undersigned at (571) 272-6692.

Christopher Bottorff
Petitions Examiner
Office of Petitions

UNITED STATES PATENT AND TRADEMARK OFFICE

Commissioner for Patents
United States Patent and Trademark Office
P.O. Box 1450
Alexandria, VA 22313-1450
www.uspto.gov

In re Application of: MCBRIDE ET AL. Appl No.: 10/818,642 Filed: April 05, 2004 For: MICROFLUIDIC DEVICES AND METHODS OF USING SAME	**DECISION GRANTING PETITION** *37 CFR 1.84*

This is a decision on the petition filed June December 20, 2004 requesting the acceptance of color photographs into the above-identified application.

On December 20, 2004, formal drawings, the present petition and authorization to charge counsel's deposit account for the $130.00 petition fee were filed. Petitioners request that color photographs be accepted in order to fulfill the requirement for formal drawings. Petitioners argue that the color photographs are necessary to properly depict the results of scientific experiments described in the specification. In support of the petition, three (3) copies of the color photographs and an amendment to the specification, were filed.

37 CFR § 1.84(b)(2) states that color photographs will be accepted in utility patent applications only after granting a petition explaining why the color photographs are necessary. The petition must include the following:

(i) The appropriate fee set forth in § 1.17(h);

(ii) Three (3) sets of color drawings; and

(iii) The specification must contain the following language as the first paragraph in that portion of the specification relating to the brief description of the drawings:

"The file of this patent contains at least one drawing executed in color. Copies of this patent with color drawing(s) will be provided by the Patent and Trademark Office upon request and payment of the necessary fee."

A review of the record reveals that petitioners have fulfilled the requirements of 37 CFR 1.84. The petition is granted. The color photographs have been accepted and will be forwarded to the Official Draftsperson for formal review.

PETITON GRANTED

/Jill Warden/
Supervisory Patent Examiner, Art Unit 1797
Technology Center 1700

TOWNSEND AND TOWNSEND AND CREW, LLP
TWO EMBARCADERO CENTER
EIGHTH FLOOR
SAN FRANCISCO, CA 94111-3834

UNITED STATES PATENT AND TRADEMARK OFFICE

UNITED STATES DEPARTMENT OF COMMERCE
United States Patent and Trademark Office
Address: COMMISSIONER FOR PATENTS
P.O. Box 1450
Alexandria, Virginia 22313-1450
www.uspto.gov

TOWNSEND AND TOWNSEND AND CREW, LLP
TWO EMBARCADERO CENTER
EIGHTH FLOOR
SAN FRANCISCO, CA 94111-3834

Mail Date: 04/21/2010

Applicant	: Lincoln McBride	: DECISION ON REQUEST FOR
Patent Number	: 7666361	: RECALCULATION of PATENT
Issue Date	: 02/23/2010	: TERM ADJUSTMENT IN VIEW
Appliction No	: 10/818,642	: OF WYETH AND NOTICE OF INTENT TO
Filed	: 04/05/2004	: ISSUE CERTIFICATE OF CORRECTION
		:

The Request for Recalculation is **GRANTED** to the extent indicated.

The patent term adjustment has been determined to be **244** days. The USPTO will *sua sponte* issue a certificate of correction reflecting the amount of PTA days determined by the recalculation.

Prior to the issuance of the certificate of correction, the USPTO will afford patentee an opportunity to be heard and request reconsideration. Accordingly, patentee has **one month or thirty (30) days**, whichever is longer, to file a request for reconsideration of this patent term adjustment calculation. See 35 U.S.C. 154(b)(3)(B)(ii) and 37 CFR 1.322(a)(4). No extensions of time will be granted under 37 CFR 1.136.

Patentee should use document code PET.OP if electronically filing a request for reconsideration of this patent term adjustment calculation. The patentee must also include the information required by 37 CFR 1.705(b)(2) and the fee required by 37 CFR 1.18(e). If patentee does not file a timely request for reconsideration of this patent term adjustment calculation including the information required by 37 CFR 1.705(b)(2) and the fee required by 37 CFR 1.18(e), the USPTO will issue a certificate of correction reflecting the PTA determination noted above.

Patentee should be aware that in order to preserve the right to review in the United States District Court for the District of Columbia of the USPTO patent term adjustment determination, patentee must ensure that he or she also take the steps required under 35 U.S.C. 154(b)(4)(A) in a timely manner. Nothing in the request for recalculation should be construed as providing an alternative time frame for commencing a civil action under 35 U.S.C. 154(b)(4)(A).

Any questions concerning this decision should be directed to the Office of Patent Legal Administration at 571-272-7702.

UNITED STATES PATENT AND TRADEMARK OFFICE

COMMISSIONER FOR PATENTS
UNITED STATES PATENT AND TRADEMARK OFFICE
P.O. BOX 1450
ALEXANDRIA, VA 22313-1450
www.uspto.gov

Paper No.

FISH & RICHARDSON PC
P.O. BOX 1022
MINNEAPOLIS, MN 55440-1022

COPY MAILED

JUL 10 2006

OFFICE OF PETITIONS

In re Application of	:	
Christopher Gallant	:	DECISION ON PETITION
Application No. 10/818,649	:	
Filed: April 5, 2004	:	
Atty Docket No. 05918-319001	:	
/ VGCP No. 6	:	

This is a decision on the "PETITION TO WITHDRAW NOTICE OF ABANDONMENT" filed May 19, 2006.

The above-identified application became abandoned for failure to reply to the Restriction Requirement mailed September 15, 2005. This Office action set a one-month shortened statutory period for reply, with extensions of time obtainable under § 1.136(a). No reply considered received and no extension obtained, the above-identified application became abandoned on October 16, 2005. A Notice of Abandonment was mailed on May 8, 2006.

In response, applicant timely filed the instant petition. Petitioner states that a response to the Restriction Requirement, including an executed certificate of mailing signed by Ted Swider was timely mailed on October 4, 2005. In support thereof, petitioner submits *inter alia* a copy of the response as filed and a statement of timely mailing by Edward Swider, the attorney's secretary who signed the certificate of mailing under § 1.8.

37 CFR 1.8(b) provides that:

In the event that correspondence is considered timely filed by being mailed or transmitted in accordance with paragraph (a) of this section, but not received in the U.S. Patent and Trademark Office after a reasonable amount of time has elapsed from the time of mailing or transmitting of the correspondence, or after

the application is held to be abandoned, or after the proceeding is dismissed, terminated, or decided with prejudice, the correspondence will be considered timely if the party who forwarded such correspondence:

(1) Informs the Office of the previous mailing or transmission of the correspondence promptly after becoming aware that the Office has no evidence of receipt of the correspondence;

(2) Supplies an additional copy of the previously mailed or transmitted correspondence and certificate; and

(3) Includes a statement which attests on a personal knowledge basis or to the satisfaction of the Director to the previous timely mailing or transmission. If the correspondence was sent by facsimile transmission, a copy of the sending unit's report confirming transmission may be used to support this statement.

On instant petition, petitioner has satisfied the requirements of 1.8(b) to have the response considered timely filed by virtue of the certificate of mailing dated October 4, 2005.

Accordingly, the Notice of Abandonment mailed May 8, 2006 is hereby **VACATED**, and the holding of abandonment is hereby **WITHDRAWN**.

The petition under § 1.181 is **GRANTED**.

No fee is required on petition under § 1.181.

Technology Center AU 3677 has been advised of this decision. The application file is, thereby, forwarded to the Technology Center's technical staff to withdraw the holding of abandonment and for the examiner to consider the response to the Restriction Requirement resubmitted on petition filed May 19, 2006.

Telephone inquiries specific to this decision should be directed to the undersigned at (571) 272-3219.

Nancy Johnson
Senior Petitions Attorney
Office of Petitions

UNITED STATES PATENT AND TRADEMARK OFFICE

Commissioner for Patents
United States Patent and Trademark Office
P.O. Box 1450
Alexandria, VA 22313-1450
www.uspto.gov

FENWICK & WEST LLP
SILICON VALLEY CENTER
801 CALIFORNIA STREET
MOUNTAIN VIEW, CA 94041

COPY MAILED
MAR 16 2010

In re Application of :
Shu Yamamoto et al :
Application No. 10/818,662 : ON PETITION
Filed: April 5, 2004 :
Attorney Docket No. 23690-08219

This is a decision on the petition, filed March 12, 2010 under 37 CFR 1.313(c)(2) to withdraw the above-identified application from issue after payment of the issue fee.

The petition is **GRANTED**.

The above-identified application is withdrawn from issue for consideration of a submission under 37 CFR 1.114 (request for continued examination). See 37 CFR 1.313(c)(2).

Petitioner is advised that the issue fee paid on March 2, 2010 in the above-identified application cannot be refunded. If, however, the above-identified application is again allowed, petitioner may request that it be applied towards the issue fee required by the new Notice of Allowance.[1]

Telephone inquiries should be directed to Irvin Dingle at (571) 272-3210.

This matter is being referred to Technology Center AU 2618 for processing of the request for continued examination under 37 CFR 1.114 and for consideration of the concurrently filed Information Disclosure Statement.

/Irvin Dingle/
Irvin Dingle
Petitions Examiner
Office of Petitions

---

[1] The request to apply the issue fee to the new Notice may be satisfied by completing and returning the new Issue Fee Transmittal Form PTOL-85(b), which includes the following language thereon: Commissioner for Patents is requested to apply the Issue Fee and Publication Fee (if any) or re-apply any previously paid issue fee to the application identified above. Petitioner is advised that, whether a fee is indicated as being due or not, the Issue Fee Transmittal Form **must** be completed and timely submitted to avoid abandonment. Note the language in bold text on the first page of the Notice of Allowance and Fee(s) Due (PTOL-85).

UNITED STATES PATENT AND TRADEMARK OFFICE

Commissioner for Patents
United States Patent and Trademark Office
P.O. Box 1450
Alexandria, VA 22313-1450
www.uspto.gov

MAILED

JUL 08 2004

Director's Office
Group 3700

Anthony B. Claiborne
849 136th Ave. N.E.
Bellevue, WA 98005

In re application of Swanberg M.	: : :	**DECISION ON PETITION TO MAKE SPECIAL UNDER 37 CFR. 1.102(c)**
Serial Number: 10/818671 Filed: April 6, 2004	: :	

For: **FEATHERING TURBINE APPARATUS**

This is a decision on the petition filed on April 6, 2004, under 37 CFR. 1.102(c) to make special the above identified application because of the age/health of the applicant. Since the requirements of the M.P.E.P Section 708.02 IV have been met, the petition will be GRANTED.

The examiner is directed (1) to make an interference search for possible interfering applications, (2) to promptly examine this application out of turn, and (3) if any interfering application is discovered, to examine such application simultaneously and state in the first official letter of such application that it is being taken out of turn because of a possible interference.

Petitioner is advised that this application will continue to be special, throughout its entire prosecution and pendency, including interference or appeal, if any, only is Petitioner makes a prompt bona-fide effort, in response to each Office action, to place the application in condition for allowance, even if it is necessary to conduct an interview with the Examiner to accomplish this purpose.

Summary: Decision on Petition **GRANTED**.

Richard A. Bertsch
Director
Technology Center 3700
(703) 308-0975

rt: 7/7/04

OIPE JC163
APR 1 8 2005
PATENT & TRADEMARK OFFICE

IFW

APPROVED 5/5/05

Atty Docket No.: 2514.001

IN THE UNITED STATES PATENT AND TRADEMARK OFFICE

Applicant	:	**Monrad, Eric**	**Art Unit:**	**3676**
Serial No.	:	**10/818,687**	**Examiner:**	**TBA**
Filed	:	**April 4, 2004**		
For	:	**A Baby Stroller Handle Extension**		

Oakland, California

April 14, 2005

Honorable Commissioner for Patents
P.O. Box 1450
Alexandria, VA 22313-1450

WITHDRAWAL OF REPRESENTATION

Dear Sir:

Applicant's attorney hereby withdraws as counsel of record in accordance with powers granted to it under the power of attorney on record due to applicants failure to meet his financial obligations under the attorney-client contract.

Applicant has been advised to contact the Commissioner concerning whether he wishes to further prosecution of this application.

Respectfully submitted,

By BRUCE & McCOY
Attorneys for Inventor

Per Ernest H. McCoy
Reg. No. 22,661
Telephone: (510) 836-2400

RECEIVED
CENTRAL FAX CENTER
MAR 1 5 2005

PTO/SB/83 (08-03)
Approved for use through 11/30/2005. OMB 0651-0035
U.S. Patent and Trademark Office; U.S. DEPARTMENT OF COMMERCE
Under the Paperwork Reduction Act of 1995, no persons are required to respond to a collection of information unless it displays a valid OMB control number.

REQUEST FOR WITHDRAWAL AS ATTORNEY OR AGENT

Application Number	09/917,824
Filing Date	07/31/2001
First Named Inventor	CRUPI, Frank
Art Unit	3671
Examiner Name	Addie, Raymond W.
Attorney Docket Number	T8466250US

To: Commissioner for Patents
P.O. Box 1450
Alexandria, VA 22313-1450

I hereby apply to withdraw as attorney or agent for the above identified patent application.

The reasons for this request are:

The Applicant/Inventor has an outstanding account receivable balance with our firm (ie. the firm where the agents of record practice) and such outstanding account has remained unpaid despite requests for payment.

CORRESPONDENCE ADDRESS

1. ☐ The correspondence address is NOT affected by this withdrawal.
2. ☒ Change the correspondence address and direct all future correspondence to:

☐ Customer Number

OR

☒ Firm or Individual Name	Frank Crupi c/o H.I.P. (Hot In Place) Recycling Equipment Inc.				
Address	1602 10th Street South				
Address					
City	Safety Harbor	State	FL	ZIP	34695
Country	United States of America				
Telephone	(727)791-7699	Fax	(727)791-7285		

☒ This request is made on behalf of myself and
- ☒ all the attorneys/agents of record,
- ☐ the attorneys/agents (with registration numbers) listed on the attached paper(s), or
- ☐ the attorneys/agents associated with Customer Number

This request is enclosed in triplicate (including any attachments).

Name	Arne I. Fors		
Signature		Registration No.	20,775
Date	February 25, 2005		

NOTE: Withdrawal is effective when approved rather than when received. Unless there are at least 30 days between approval of withdrawal and the expiration date of a time period for response or possible extension period, the request to withdraw is normally disapproved.

This collection of information is required by 37 CFR 1.36. The information is required to obtain or retain a benefit by the public which is to file (and by the USPTO to process) an application. Confidentiality is governed by 35 U.S.C. 122 and 37 CFR 1.14. This collection is estimated to take 12 minutes to complete, including gathering, preparing, and submitting the completed application form to the USPTO. Time will vary depending upon the individual case. Any comments on the amount of time you are required to complete this form and/or suggestions for reducing this burden, should be sent to the Chief Information Officer, U.S. Patent and Trademark Office, U.S. Department of Commerce, P.O. Box 1450, Alexandria, VA 22313-1450. DO NOT SEND FEES OR COMPLETED FORMS TO THIS ADDRESS. SEND TO: Commissioner for Patents, P.O. Box 1450, Alexandria, VA 22313-1450.

UNITED STATES PATENT AND TRADEMARK OFFICE

Commissioner for Patents
United States Patent and Trademark Office
P.O. Box 1450
Alexandria, VA 22313-1450
www.uspto.gov

WALTER W. DUFT
LAW OFFICES OF WALTER W. DUFT
8616 MAIN ST
SUITE 2
WILLIAMSVILLE NY 14221

COPY MAILED

JUN 28 2007

OFFICE OF PETITIONS

In re Application of	:	
NOTARO et al.	:	
Application No. 10/818,705	:	DECISION ON PETITION
Filed: 04/06/2004	:	
Attorney Docket No. 5181-3cip	:	

This is a decision on the petition under 37 CFR 1.137(b), filed January 4, 2007, to revive the above-identified application.

The petition is **GRANTED**.

The application became abandoned for failure to reply in a timely manner to the Restriction Requirement, mailed September 8, 2005, which set a shortened statutory period for reply of one (1) month or thirty (30) days (whichever is later). No extensions of time under the provisions of 37 CFR 1.136(a) were obtained. Accordingly, the application became abandoned on October 9, 2005. The Office mailed a Notice of Abandonment on April 12, 2006.

The petition satisfies the requirements of 37 CFR 1.137(b) in that petitioner has supplied (1) the reply in the form an Election; (2) the petition fee; and (3) a proper statement of unintentional delay.

This matter is being forwarded to Technology Center AU 3677.

Telephone inquiries concerning this matter may be directed to the undersigned at (571) 272-3211.

Christina Tartera Donnell

Christina Tartera Donnell
Senior Petitions Attorney
Office of Petitions

UNITED STATES PATENT AND TRADEMARK OFFICE

COMMISSIONER FOR PATENTS
UNITED STATES PATENT AND TRADEMARK OFFICE
P.O. BOX 1450
ALEXANDRIA, VA 22313-1450
www.uspto.gov

Winston & Strawn LLP
Patent Department
1700 K Street, N.W.
Washington DC 20006

MAILED

APR 16 2009

OFFICE OF PETITIONS

In re Application of	:	
PATERSON et al.	:	
Application No. 10/818,728	:	ON APPLICATION FOR
Filed: April 6, 2004	:	PATENT TERM ADJUSTMENT
Atty Docket No. 200588-21000	:	

This is in response to the "REQUEST FOR RECONSIDERATION OF PATENT TERM ADJUSTMENT UNDER 37 C.F.R. 1.705(b)" filed January 8, 2009. Applicant requests that the determination of patent term adjustment be increased by 551 days to 1155 days. Applicant requests this correction on the basis that the Office will take in excess of three years to issue this patent and in light of the recent court decision in Wyeth v. Dudas, No. 07-1492 (D.D.C. September 30, 2008).

As the instant application for patent term adjustment requests reconsideration of the patent term adjustment as it relates to the Office's failure to issue the patent within three years of the filing date, a decision is being **held in abeyance** until after the actual patent date. Knowledge of the actual date the patent issues is required to calculate the amount, if any, of additional patent term patentee is entitled to for Office failure to issue the patent within three years. See 37 CFR 1.703(b). (This is true even in this instance where a request for continued examination (RCE) was filed. The computer will not undertake the § 1.703(b) calculation until the actual date of issuance of the patent has been determined. Accordingly, it is still too soon to make a determination as to the correctness of any period of adjustment that will or will not be entered pursuant to § 1.703(b)).

Applicant is given **TWO (2) MONTHS** from the issue date of the patent to file a written request for reconsideration of the patent term adjustment for Office failure to issue the patent within three years. A copy of this decision should accompany the request. Applicant may seek such consideration without payment of an additional fee. However, as to all other bases for seeking reconsideration of the patent term adjustment indicated in the patent, all requirements of § 1.705(d) must be met. Requests for reconsideration on other bases must be timely filed and must include payment of the required fee.

Rather than file the request for reconsideration of Patent Term Adjustment at the time of the mailing of the notice of allowance, applicant is advised that they may wait until the time of the issuance of the patent and file a request for reconsideration of the patent term pursuant to 37 CFR 1.705(d). The USPTO notes that it does not calculate the amount of time earned pursuant to 37 CFR 1.702(b) until the time of the issuance of the patent and accordingly, the Office will consider any request for reconsideration of the patent term adjustment due to an error in the calculation of 37 CFR 1.702(b) to be timely if the request for reconsideration is filed within two months of the issuance of the patent.

It is acknowledged that applicant is correct that any period of adjustment will be entered in light of 35 U.S.C. 154(B) GUARANTEE OF NO MORE THAN 3-YEAR APPLICATION PENDENCY, which provides that:

> Subject to the limitations under paragraph (2), if the issue of an original patent is delayed due to the failure of the United States Patent and Trademark Office to issue a patent within 3 years after the actual filing date of the application in the United States, not including —
>
> (i) any time consumed by continued examination of the application requested by the applicant under section 132(b);

It is noted that a Request for Continued Examination (RCE) was filed in this application on October 17, 2007.

The $200.00 fee set forth in 37 CFR 1.18(e) will be charged to the Deposit Account. No additional fees are required.

The application is being forwarded to the Office of Data Management for issuance of the patent. The patent term adjustment indicated on the patent (as shown on the Issue Notification mailed about three weeks prior to patent issuance) will include any additional adjustment accrued both for Office delay in issuing the patent more than four months after payment of the issue fee and satisfaction of all outstanding requirements, and for the Office taking in excess of three years to issue the patent (to the extent that the three-year period does not overlap with periods already accorded).

Telephone inquiries specific to this decision should be directed to Senior Petitions Attorney, Christina Tartera Donnell, at (571) 272-3211.

Kery A. Fries
Senior Legal Advisor
Office Patent Legal Administration

UNITED STATES PATENT AND TRADEMARK OFFICE

Commissioner for Patents
United States Patent and Trademark Office
P.O. Box 1450
Alexandria, VA 22313-1450
www.uspto.gov

Winston & Strawn LLP
Patent Department
1700 K Street, N.W.
Washington DC 20006

MAILED

JUL 14 2009

OFFICE OF PETITIONS

In re Patent No. 7,533,440 :
Paterson et al. :
Issue Date: May 19, 2009 : DECISION ON REQUEST FOR
Application No. 10/818,728 : RECONSIDERATION OF
Filed: April 6, 2004 : PATENT TERM ADJUSTMENT
Attorney Docket No. 200588-21000 :

This is in response to the "SUPPLEMENTAL REQUEST FOR RECONSIDERATION OF PATENT TERM ADJUSTMENT UNDER 37 C.F.R. 1.705(b)" filed June 17, 2009, which is properly treated under 37 CFR 1.705(d). Patentees request that the patent term adjustment determination for the above-identified patent be corrected from six hundred sixty-five (665) days to eight hundred fifty-nine (859) days.

The request for reconsideration of patent term adjustment is **DISMISSED** with respect to making any change in the patent term adjustment determination under 35 U.S.C. 154(b) of 665 days.

On May 19, 2009, the above-identified application matured into U.S. Patent No. 7,533,440 with a revised patent term adjustment of 665 days. This request for reconsideration of patent term adjustment was timely filed within two months of the issue date of the patent. See 37 CFR 1.705(d).

Patentees request recalculation of the patent term adjustment based on the decision in Wyeth v. Dudas, 580 F. Supp. 2d 138, 88 U.S.P.Q. 2d 1538 (D.D.C. 2008). Patentees aver that the correct number of days of patent term adjustment is 859 days under the court's interpretation of the overlap provision as set forth in Wyeth v. Dudas, 580 F. Supp. 2d 138, 88 U.S.P.Q. 2d 1538 (D.D.C. 2008).

Specifically, patentees state:

> The '440 patent was filed on April 6, 2004 and [a] Request for Continued Examination was filed on October 17, 2007, a period that is 3 years plus 194 day. This entitles Patentees to and additional 194 days beyond the three years from the filing date in view of Wyeth v. [Dudas], No. 07-1472, slip op (D.D.C. Sept. 30, 2008) under 37 C.F.R. § 1.703(b).

Request of 06/17/09, p. 1.

Patentees' interpretation of the period of overlap has been considered, but found inconsistent with the Office's interpretation of the overlap provision, 35 U.S.C. 154(b)(2)(A). 35 U.S.C. 154(b)(2)(A) limits the adjustment of patent term, as follows:

> to the extent that the periods of delay attributable to grounds specified in paragraph (1) overlap, the period of any adjustment granted under this subsection shall not exceed the actual number of days the issuance of the patent was delayed.

As explained in *Explanation of 37 CFR 1.703(f)*[1] *and of the United States Patent and Trademark Office Interpretation of 35 U.S.C. 154(b)(2)(A)*, 69 Fed. Reg. 34283 (June 21, 2004), the Office interprets 35 U.S.C. 154(b)(2)(A) as permitting either patent term adjustment under 35 U.S.C. 154(b)(1)(A)(i)-(iv), or patent term adjustment under 35 U.S.C. 154(b)(1)(B), but not as permitting patent term adjustment under both 35 U.S.C. 154(b)(1)(A)(i)-(iv) and 154(b)(1)(B). Accordingly, the Office implements the overlap provision as follows:

> If an application is entitled to an adjustment under 35 U.S.C. 154(b)(1)(B), the entire period during which the application was pending (except for periods excluded under

---

[1] Likewise, 37 CFR 1.703(f) provides that:

> To the extent that periods of delay attributable to the grounds specified in § 1.702 overlap, the period of adjustment granted under this section shall not exceed the actual number of days the issuance of the patent was delayed.

35 U.S.C. 154(b)(1)(B)(i)-(iii)), and not just the period beginning three years after the actual filing date of the application, is the period of delay under 35 U.S.C. 154(b)(1)(B) in determining whether periods of delay overlap under 35 U.S.C. 154(b)(2)(A). Thus, any days of delay for Office issuance of the patent more than 3 years after the filing date of the application, which overlap with the days of patent term adjustment accorded prior to the issuance of the patent will not result in any additional patent term adjustment. See 35 U.S.C. 154(b)(1)(B), 35 U.S.C. 154(b)(2)(A), and 37 CFR § 1.703(f). See *Changes to Implement Patent Term Adjustment Under Twenty Year Term; Final Rule*, 65 Fed. Reg. 54366 (Sept. 18, 2000). See also *Revision of Patent Term Extension and Patent Term Adjustment Provisions; Final Rule*, 69 Fed. Reg. 21704 (April 22, 2004), 1282 Off. Gaz. Pat. Office 100 (May 18, 2004). See also *Explanation of 37 CFR 1.703(f) and of the United States Patent and Trademark Office Interpretation of 35 U.S.C. 154(b)(2)(A)*, 69 Fed. Reg. 34283 (June 21, 2004).

Further, as stated in the *Explanation of 37 CFR 1.703(f) and of the United States Patent and Trademark Office Interpretation of 35 U.S.C. 154(b)(2)(A)*, the Office has consistently taken the position that if an application is entitled to an adjustment under the three-year pendency provision of 35 U.S.C. 154(b)(1)(B), the entire period during which the application was pending before the Office (except for periods excluded under 35 U.S.C. 154(b)(1)(B)(i)-(iii)), and not just the period beginning three years after the actual filing date of the application, is the relevant period under 35 U.S.C. 154(b)(1)(B) in determining whether periods of delay "overlap" under 35 U.S.C. 154(b)(2)(A).

This interpretation is consistent with the statute. Taken together, the statute and rule provide that to the extent that periods of delay attributable to grounds specified in 35 U.S.C. 154(b)(1) and in corresponding 37 CFR 1.702 overlap, the period of adjustment granted shall not exceed the actual number of days the issuance of the patent was delayed.

It is noted, however, that delays resulting in the Office's failure to meet the time frames specified in 35 U.S.C. 154 (b)(1)(A) (the "fourteen-four-four-four" provisions) are not always overlapping with a delay resulting in the Office's

failure to issue a patent within the three-year time frame specified in 35 U.S.C. 154(b)(1)(B) because not all application pendency time is counted toward this three-year period. See 35 U.S.C. 154(b)(1)(B)(i)-(iii).

In this instance, all application pendency time is not counted toward the three-year period. A request for continued examination was filed on October 17, 2007. The period subsequent to the filing of the RCE is not included in the three-year time frame specified in 35 U.S.C. 154(b)(1)(B). See 35 U.S.C. 154(b)(1)(B)(i). Thus, the relevant period under 35 U.S.C. 154(b)(1)(B) in determining whether periods of delay "overlap" under 35 U.S.C. 154(b)(2)(A) is the period from the filing of the application on April 6, 2004, to the filing of the RCE on October 17, 2007. Thus, only the 668 days[2] of patent term adjustment accorded prior to the filing of the RCE pursuant to 37 CFR 1.702(a)(1)[3] are considered in determining overlap. The 11 days[4] for Office delay under 37 CFR 1.702(a)(4),[5] occurring

---

[2] A nonfinal Office action was mailed on April 5, 2007, 14 months and 668 days after the application was filed on April 6, 2004.

[3] 37 CFR 1.702, provides grounds for adjustment of patent term due to examination delay under the Patent Term Guarantee Act of 1999 (original applications, other than designs, filed on or after May 29, 2000).

> (a) Failure to take certain actions within specified time frames. Subject to the provisions of 35 U.S.C. 154(b) and this subpart, the term of an original patent shall be adjusted if the issuance of the patent was delayed due to the failure of the Office to:
> (1) Mail at least one of a notification under 35 U.S.C. 132 or a notice of allowance under 35 U.S.C. 151 not later than fourteen months after the date on which the application was filed under 35 U.S.C. 111(a) or fulfilled the requirements of 35 U.S.C. 371 in an international application[.]

[4] The Office issued the patent on May 19, 2009, 4 months and 11 days after the payment of the issue fee on January 8, 2009.

[5] 37 CFR 1.702, provides grounds for adjustment of patent term due to examination delay under the Patent Term Guarantee Act of 1999 (original applications, other than designs, filed on or after May 29, 2000).

> (a) Failure to take certain actions within specified time frames. Subject to the provisions of 35 U.S.C. 154(b) and this subpart, the term of an original patent shall be adjusted if the issuance of the patent was delayed due to the failure of the Office to:
> . . .

subsequent to the filing of the RCE is not considered. The 194 days attributed to Office delay pursuant to 37 CFR 1.702(b) for failure to issue the patent within three years after the filing of the application is determined to overlap with the 668 days attributed to Office delay pursuant to 1.702(a)(1). 679 (668 + 11) days is the actual number of days issuance of the patent was delayed. Accordingly, at issuance, the Office properly entered no additional period of adjustment, having considered the 194 days of Office delay under the three-year pendency provision.

In view thereof, the Office affirms the revised determination of patent term adjustment at the time of the issuance of the patent is 665 days (679 (668 + 11) days of Office delay - 14 days of applicant delay).

The Office acknowledges the previous submission of the $200.00 fee set forth in 37 CFR 1.18(e) on January 8, 2009. No additional fees are required.

Telephone inquiries specific to this matter should be directed to the undersigned at (571) 272-3211.

Christina Tartera Donnell

Christina Tartera Donnell
Senior Petitions Attorney
Office of Petitions

---

(4) Issue a patent not later than four months after the date on which the issue fee was paid under 35 U.S.C. 151 and all outstanding requirements were satisfied.

UNITED STATES PATENT AND TRADEMARK OFFICE

Commissioner for Patents
United States Patent and Trademark Office
P.O. Box 1450
Alexandria, VA 22313-1450
www.uspto.gov

TOWNSEND AND TOWNSEND AND CREW, LLP
TWO EMBARCADERO CENTER
EIGHTH FLOOR
SAN FRANCISCO CA 94111-3834

MAILED

APR 27 2009

OFFICE OF PETITIONS

In re Application of	:	
ROSSING, Martin et al.	:	
Application No. 10/818,738	:	DECISION ON PETITION
Filed: April 05, 2004	:	TO WITHDRAW
Attorney Docket No. **021433-000160US**	:	FROM RECORD
	:	

This is a decision on the Request to Withdraw as attorney or agent of record under 37 C.F.R. § 1.36(b), filed February 12, 2009.

The request is **APPROVED**.

A grantable request to withdraw as attorney/agent of record must be signed by every attorney/agent seeking to withdraw or contain a clear indication that one attorney is signing on behalf of another/others. The Office requires the practitioner(s) requesting withdrawal to certify that he, she, or they have: (1) given reasonable notice to the client, prior to the expiration of the response period, that the practitioner(s) intends to withdraw from employment; (2) delivered to the client or a duly authorized representative of the client all papers and property (including funds) to which the client is entitled; and (3) notified the client of any responses that may be due and the time frame within which the client must respond, pursuant 37 CFR 10.40(c).

The request was signed by James M. Heslin on behalf of all attorneys of record who are associated with customer No. 20350. All attorneys/agents associated have been withdrawn. Applicant is reminded that there is no attorney of record at this time.

The request to change the correspondence address of record is not acceptable as the requested correspondence address is not that of: (1) the first named signing inventor; or (2) an intervening assignee of the entire interest under 37 C.F.R 3.71. All future communications from the Office will be directed to the first named signing inventor.

There are no outstanding office actions at this time.

Telephone inquiries concerning this decision should be directed to Michelle R. Eason at 571-272-4231.

Michelle R. Eason
Paralegal Specialist
Office of Petitions

cc: **MARTIN A. ROSSING**
1930 127TH CIRCLE NW
COON RAPIDS, MN 55448

cc: **PATTERSON, THUENTE, SKAAR**
& CHRISTENSEN, P.A.
4800 IDS CENTER
80 SOUTH 8TH STREET
MINNEAPOLIS, MN 55402-2100

UNITED STATES PATENT AND TRADEMARK OFFICE

UNITED STATES DEPARTMENT OF COMMERCE
United States Patent and Trademark Office
Address: COMMISSIONER FOR PATENTS
P.O. Box 1450
Alexandria, Virginia 22313-1450
www.uspto.gov

PATTERSON THUENTE CHRISTENSEN PEDERSEN, P.A.
4800 IDS CENTER
80 SOUTH 8TH STREET
MINNEAPOLIS, MN 55402-2100

Mail Date: 04/21/2010

Applicant	: Martin A. Rossing	: DECISION ON REQUEST FOR
Patent Number	: 7623926	: RECALCULATION of PATENT
Issue Date	: 11/24/2009	: TERM ADJUSTMENT IN VIEW
Appliction No	: 10/818,738	: OF WYETH AND NOTICE OF INTENT TO
Filed	: 04/05/2004	: ISSUE CERTIFICATE OF CORRECTION
		:

The Request for Recalculation is **GRANTED** to the extent indicated.

The patent term adjustment has been determined to be **476** days. The USPTO will *sua sponte* issue a certificate of correction reflecting the amount of PTA days determined by the recalculation.

Prior to the issuance of the certificate of correction, the USPTO will afford patentee an opportunity to be heard and request reconsideration. Accordingly, patentee has **one month or thirty (30) days**, whichever is longer, to file a request for reconsideration of this patent term adjustment calculation. See 35 U.S.C. 154(b)(3)(B)(ii) and 37 CFR 1.322(a)(4). No extensions of time will be granted under 37 CFR 1.136.

Patentee should use document code PET.OP if electronically filing a request for reconsideration of this patent term adjustment calculation. The patentee must also include the information required by 37 CFR 1.705(b)(2) and the fee required by 37 CFR 1.18(e). If patentee does not file a timely request for reconsideration of this patent term adjustment calculation including the information required by 37 CFR 1.705(b)(2) and the fee required by 37 CFR 1.18(e), the USPTO will issue a certificate of correction reflecting the PTA determination noted above.

Patentee should be aware that in order to preserve the right to review in the United States District Court for the District of Columbia of the USPTO patent term adjustment determination, patentee must ensure that he or she also take the steps required under 35 U.S.C. 154(b)(4)(A) in a timely manner. Nothing in the request for recalculation should be construed as providing an alternative time frame for commencing a civil action under 35 U.S.C. 154(b)(4)(A).

Any questions concerning this decision should be directed to the Office of Patent Legal Administration at 571-272-7702.

UNITED STATES PATENT AND TRADEMARK OFFICE

Commissioner for Patents
United States Patent and Trademark Office
P.O. Box 1450
Alexandria, VA 22313-1450
www.uspto.gov

PROCOPIO, CORY, HARGREAVES & SAVICH, LLP
530 B Street, Suite 2100
San Diego, CA 92101-4469

COPY MAILED

AUG 0 1 2006

OFFICE OF PETITIONS

In re Application of	:	
Randy Thomas	:	
Application No. 10/818,746	:	DECISION ON PETITION
Filed: April 04, 2004	:	TO WITHDRAW
Attorney Docket No. 1238-PA01	:	FROM RECORD
	:	

This is a decision on the Request to Withdraw as attorney or agent of record under 37 C.F.R. § 1.36(b), filed April 04,2004

The request is **NOT APPROVED**.

A grantable request to withdraw as attorney/agent of record must be signed by every attorney/agent seeking to withdraw or contain a clear indication that one attorney is signing on behalf of another/others. A request to withdraw will not be approved unless at least 30 (thirty) days would remain between the date of approval and the later of the expiration date of a time to file a response or the expiration date of the maximum time period which can be extended under 37 C.F.R. § 1.136(a).

The request cannot be approved because The Office cannot approve the request at this time since the reasons provided do not meet any of the conditions under the mandatory or permissive categories enumerated in 37 CFR 10.40. Section 10.40 of Title 37 of the Code of Federal Regulation states, "[a] practitioner shall not withdraw from employment in a proceeding before the Office without permission from the Office[.]" More specifically, 37 CFR 10.40 states, "[i]f paragraph (b) of this section is not applicable, a practitioner may not request permission to withdraw in matter pending before the Office unless such request or such withdrawal is" for one the permissive reasons listed in 37 CFR 10.40(c). The reasons set forth in the request, do not meet any the conditions set forth in 37 CFR 10.40.

All future communications from the Office will continue to be directed to the above-listed address until otherwise notified by applicant.

Telephone inquiries concerning this decision should be directed to Charles Smoot 571-272-3299.

David Bucci
Petitions Examiner
Office of Petitions

cc: Gary Eastman
707 Broadway, Suite 1800
San Diego, CA 92101

UNITED STATES PATENT AND TRADEMARK OFFICE

UNITED STATES DEPARTMENT OF COMMERCE
United States Patent and Trademark Office
Address: COMMISSIONER FOR PATENTS
P.O. Box 1450
Alexandria, Virginia 22313-1450
www.uspto.gov

PERKINS COIE LLP
PATENT-SEA
P.O. BOX 1247
SEATTLE, WA 98111-1247

Mail Date: 04/20/2010

Applicant	: Andrei Erofeev	: DECISION ON REQUEST FOR
Patent Number	: 7631351	: RECALCULATION of PATENT
Issue Date	: 12/08/2009	: TERM ADJUSTMENT IN VIEW
Appliction No	: 10/818,747	: OF WYETH AND NOTICE OF INTENT TO
Filed	: 04/05/2004	: ISSUE CERTIFICATE OF CORRECTION
		:

The Request for Recalculation is **GRANTED** to the extent indicated.

The patent term adjustment has been determined to be **896** days. The USPTO will *sua sponte* issue a certificate of correction reflecting the amount of PTA days determined by the recalculation.

Prior to the issuance of the certificate of correction, the USPTO will afford patentee an opportunity to be heard and request reconsideration. Accordingly, patentee has **one month or thirty (30) days**, whichever is longer, to file a request for reconsideration of this patent term adjustment calculation. See 35 U.S.C. 154(b)(3)(B)(ii) and 37 CFR 1.322(a)(4). No extensions of time will be granted under 37 CFR 1.136.

Patentee should use document code PET.OP if electronically filing a request for reconsideration of this patent term adjustment calculation. The patentee must also include the information required by 37 CFR 1.705(b)(2) and the fee required by 37 CFR 1.18(e). If patentee does not file a timely request for reconsideration of this patent term adjustment calculation including the information required by 37 CFR 1.705(b)(2) and the fee required by 37 CFR 1.18(e), the USPTO will issue a certificate of correction reflecting the PTA determination noted above.

Patentee should be aware that in order to preserve the right to review in the United States District Court for the District of Columbia of the USPTO patent term adjustment determination, patentee must ensure that he or she also take the steps required under 35 U.S.C. 154(b)(4)(A) in a timely manner. Nothing in the request for recalculation should be construed as providing an alternative time frame for commencing a civil action under 35 U.S.C. 154(b)(4)(A).

Any questions concerning this decision should be directed to the Office of Patent Legal Administration at 571-272-7702.

UNITED STATES PATENT AND TRADEMARK OFFICE

Commissioner for Patents
United States Patent and Trademark Office
P.O. Box 1450
Alexandria, VA 22313-1450
www.uspto.gov

GREGORY L. BRADLEY
MEDRAD INC.
ONE MEDRAD DRIVE
INDIANOLA PA 15051

COPY MAILED

AUG 2 5 2004

OFFICE OF PETITIONS

In re Application of	:
Frederick W. Trombley et al	:DECISION GRANTING FILING
Application No. 10/818,748	:DATE OF April 6, 2004
Filed: April 6, 2004	:
Attorney Docket No. VI/00-013.C	:

This is a decision on the petition filed July 15, 2004, requesting that the above-identified application be accorded a filing date of April 6, 2004.

Petitioner requests the earlier filing date on the basis that the application was purportedly deposited with the U.S. Postal Service (USPS) as Express Mail on April 6, 2004 pursuant to 37 CFR 1.10. In support, petitioner has submitted a copy of Express Mail label No. EV 207493858 US showing a stamped date of April 6, 2004. The same Express Mail receipt number appears on the original "Utility Patent Application Transmittal." Additionally, the other available evidence, the Internet USPS Express Mail Tracking and Delivery Confirmation, discloses that the package was deposited on April 6, 2004.

In view of the USPS receipt stamp of April 6, 2004 appearing on the same Express Mail label number as shown on the transmittal for the instant application, it is concluded that the application was deposited as "Express Mail" with the USPS on April 6, 2004.

The petition is **granted**.

A Filing Receipt with the filing date of April 6, 2004 was mailed on August 6, 2004. Therefore, the petition fee of $130 is unnecessary and will be credited to deposit account no. 13-2530 as authorized.

Telephone inquiries specific to this decision on petition should be directed to Karen Creasy at (703) 305-8859.

This application is being referred to Technology Center Art Unit 3737 for examination in due course.

Brian Hearn
Senior Petitions Examiner
Office of Petitions
Office of the Deputy Commissioner
for Patent Examination Policy

UNITED STATES PATENT AND TRADEMARK OFFICE

Commissioner for Patents
United States Patent and Trademark Office
P.O. Box 1450
Alexandria, VA 22313-1450
www.uspto.gov

YAHOO! INC.
C/O DREIER LLP
499 PARK AVENUE
NEW YORK, NY 10022

COPY MAILED

APR 1 0 2008

OFFICE OF PETITIONS

In re Application of	:	
Shyam Kapur	:	
Application No. 10/818,752	:	ON PETITION
Filed: April 5, 2004	:	
Attorney Docket No. 600189-376	:	

This is a decision on the petition under 37 CFR 1.137(b), filed November 15, 2007, to revive the above-identified application.

The petition is **GRANTED**.

The above-identified application became abandoned for failure to reply in a timely manner to the non-final Office action mailed August 8, 2006, which set a shortened statutory period for reply of three (3) months. No extension of time under the provisions of 37 CFR 1.136(a) were obtained. Accordingly, the above-identified application became abandoned on November 9, 2006.

Telephone inquiries concerning this decision should be directed to Irvin Dingle at (571) 272-3210.

This matter is being referred to Technology Center AU 2168 for further processing.

Irvin Dingle
Petitions Examiner
Office of Petitions

UNITED STATES PATENT AND TRADEMARK OFFICE

Commissioner for Patents
United States Patent and Trademark Office
P.O. Box 1450
Alexandria, VA 22313-1450
www.uspto.gov

PHILIP H ALBERT
TOWNSEND AND TOWNSEND AND CREW, LLP
TWO EMBARCADERO CENTER
EIGHTH FLOOR
SAN FRANCISCO, CA 94111-3834

COPY MAILED

MAY 29 2009

OFFICE OF PETITIONS

In re Application of	:	
Shyam Kapur	:	DECISION ON PETITION
Application No. 10/818,752	:	TO WITHDRAW
Filed: April 5, 2004	:	FROM RECORD
Attorney Docket No. 600189-376	:	

This is a decision on the Request to Withdraw as attorney or agent of record under 37 C.F.R. § 1.36(b), filed August 29, 2005.

The request is **NOT APPROVED** because it is moot.

A review of the file record indicates that on February 17, 2006 the power of attorney to Townsend and Townsend and Crew, LLP was revoked by the assignee of the patent application. Accordingly, the request to withdraw under 37 C.F.R. § 1.36(b) is moot.

All future communications from the Office will be directed to the below-listed address until otherwise notified by applicant.

Telephone inquires concerning this decision should be directed to the undersigned at 571-272- 7751. All other inquires concerning either the examination or status of the application should be directed to the Technology Center.

Joan Olszewski

Joan Olszewski
Petitions Examiner
Office of Petitions

cc: YAHOO! INC.
C/O Ostrow Kaufman & Frankl LLP
The Chrysler Building
405 Lexington Avenue, 62nd Floor
New York, NY 10174

SPE RESPONSE FOR CERTIFICATE OF CORRECTION

Paper No.: _____

DATE : 6/26/09

TO SPE OF : ART UNIT 2434

SUBJECT : Request for Certificate of Correction for Appl. No.: 10818753 Patent No.: 7489780 B2

Please respond to this request for a certificate of correction within 7 days.

FOR IFW FILES:

Please review the requested changes/corrections as shown in the **COCIN** document(s) in the IFW application image. No new matter should be introduced, nor should the scope or meaning of the claims be changed.

Please complete the response (see below) and forward the completed response to scanning using document code **COCX**.

FOR PAPER FILES:

Please review the requested changes/corrections as shown in the attached certificate of correction. Please complete this form (see below) and forward it with the file to:

Certificates of Correction Branch (C of C)
Randolph Square 9D40-D
Palm Location 7580

You can fax the Directors/SPE response to 571-270-9990

Lamonte Newsome

Certificates of Correction Branch

703-756-1574

Thank You For Your Assistance

The request for issuing the above-identified correction(s) is hereby:

Note your decision on the appropriate box.

XApproved	**All** changes apply.
❑ **Approved in Part**	Specify below which changes **do not** apply.
❑ **Denied**	State the reasons for denial below.

Comments: Approved all

SPE RESPONSE FOR CERTIFICATE OF CORRECTION

/KAMBIZ ZAND/ 2434

SPE Art Unit

UNITED STATES PATENT AND TRADEMARK OFFICE

Commissioner for Patents
United States Patent and Trademark Office
P.O. Box 1450
Alexandria, VA 22313-1450
www.uspto.gov

INTEL CORPORATION
c/o INTELLEVATE, LLC
P.O. BOX 52050
MINNEAPOLIS MN 55402

COPY MAILED

JUL 07 2008

OFFICE OF PETITIONS

In re Application of
Sujat JAMIL et al.
Application No. 10/818,766
Filed: April 06, 2004
Attorney Docket No. P8932C

DECISION ON PETITION

This is a decision on the petition under the unintentional provisions of 37 CFR 1.137(b), filed May 19, 2008, to revive the above-identified application.

The petition is **GRANTED**.

This application became abandoned for failure to timely pay the issue and publication fees on or before March 28, 2008, as required by the Notice of Allowance and Fee(s) Due, mailed December 28, 2007, which set a statutory period for reply of three (3) months. Accordingly, the application became abandoned on March 29, 2008.

The petition satisfies the requirements of 37 CFR 1.137(b) in that petitioner has supplied (1) the reply in the form of payment of the issue fee of $1440.00 and publication fee of $300.00; (2) the petition fee of $1540.00; and (3) a proper statement of unintentional delay. Accordingly, the issue and publication fee payments are accepted as being unintentionally delayed.

Telephone inquiries concerning this decision should be directed to Michelle R. Eason at (571) 272-4231.

This application is being referred to Office of Data Management.

Michelle R. Eason
Paralegal Specialist
Office of Petitions

OIPE JC165
OCT 19 2004
PATENT & TRADEMARK OFFICE

10-20-04

DFW

FILE COPY

IN THE UNITED STATES PATENT AND TRADEMARK OFFICE

In re Application of:	)	
Duhane Lam, Gerard Francis McLean,	)	
Olen Richard Vanderleeden	)	**Group Art Unit:** 1764
Serial No.: 10/818,780	)	
Filed: April 6, 2004	)	
For: Compact Chemical Reactor	)	

PETITION GRANTED

William Krynski
Special Program Examiner
TC 1700 2-10-05

Mail Stop Petition
Commissioner for Patents
P.O. Box 1450
Alexandria, VA 22313-1450

Certificate of Express Mail

I hereby certify that this correspondence is being deposited with the United States Postal Service as "Express Mail Post Office to Addressee" Express Mail No. ER 896 593 667 US in an envelope addressed to MAIL STOP PETITION; Commissioner for Patents; PO Box 1450; Alexandria, VA, 22313-1450, on the following date: October 19, 2004

Christian Heausler

Christian Heausler

PETITION TO MAKE SPECIAL UNDER 37 C.F.R. § 1.102(C)

Applicants hereby petition the Commissioner pursuant to 37 C.F.R. § 1.102(c) to accord "special status" to the above-identified patent application for the reasons set forth below. Applicants believe that no fee is due in connection with this petition. The basis for this petition (in accordance with MPEP §708.02 V and VI) is that the Applicants' present embodiments materially enhance the quality of the environment and materially contribute to the development or conservation of energy resources.

~~10/22/2004 AWONDAF1 00000027 501313 10818780~~
~~01 FC:1460 130.00 DA~~

10/22/2004 AWONDAF1 00000028 501313 10818780
01 FC:1460 130.00 DA

SPE RESPONSE FOR CERTIFICATE OF CORRECTION

Paper No.: _____

DATE : 5-1-08

TO SPE OF : **Technology Center** 1791 10/818780

SUBJECT : Request for Certificate of Correction on Patent No.: 7052795 B2

A response is requested with respect to the accompanying request for a certificate of correction.

Please complete this form and return with file, within 7 days to:
Palm location **7580, Certificates of Correction Branch – South Tower – 9A22**
If response is for an IFW, **return to employee (named below) via PUBSCofC Team in MADRAS.**
With respect to the change(s) requested, correcting Office and/or Applicant's errors, should the patent read as shown in the certificate of correction (COCIN)? No new matter should be introduced, nor should the scope or meaning of the claims be changed.

Thank You For Your Assistance

Elisha Evans
Certificates of Correction Branch
Tel. No. 703-308-9390 EXT 110

The request for issuing the above-identified correction(s) is hereby:
Note your decision on the appropriate box.

- ☒ **Approved** — **All** changes apply.
- ☐ **Approved in Part** — Specify below which changes **do not** apply.
- ☐ **Denied** — State the reasons for denial below.

Comments:

_____

_____

_____

_____

_____

SPE **Art Unit** 1797

SPE RESPONSE FOR CERTIFICATE OF CORRECTION

DATE : 4/10/07

Paper No.: ——

TO SPE OF : ART UNIT 1742

SUBJECT : Request for Certificate of Correction for Appl. No.: 10/818782 Patent No.: 7153339 B2

Please respond to this request for a certificate of correction within 7 days.

Please review the requested changes/corrections as shown in the **COCIN** document(s) in the IFW application image. No new matter should be introduced, nor should the scope or meaning of the claims be changed.

Please complete the response (see below) and forward the completed response to scanning using document code **COCX**.

Virginia Tolbert
Certificates of Correction Branch

703-308-9390 ext. 113

Thank You For Your Assistance

The request for issuing the above-identified correction(s) is hereby:
Note your decision on the appropriate box.

n.m.

- ☒ **Approved** — All changes apply.
- ☐ **Approved in Part** — Specify below which changes **do not** apply.
- ☐ **Denied** — State the reasons for denial below.

Comments: _____

Roy V. Ching
SPE

1742
Art Unit

UNITED STATES PATENT AND TRADEMARK OFFICE

COMMISSIONER FOR PATENTS
UNITED STATES PATENT AND TRADEMARK OFFICE
P.O. BOX 1450
ALEXANDRIA, VA 22313-1450
www.uspto.gov
DIW Apr-05

WOOD, PHILLIPS, KATZ, CLARK & MORTIMER
500 W. MADISON STREET
SUITE 3800
CHICAGO IL 60661

COPY MAILED

APR 18 2005

OFFICE OF PETITIONS

In re Application of	:
Coronado, Ruiz, and Santisteban	: DECISION REFUSING STATUS
Application No. 10/818,793	: UNDER 37 CFR 1.47(a)
Filed: 6 April, 2004	:
Atty Docket No. PGI6044P2551US	:

This is in response to the petition under 37 CFR 1.47(a) filed on 21 December, 2004.

The petition is **DISMISSED**.

Rule 47 applicant is given TWO MONTHS from the mailing date of this decision to reply, correcting the below-noted deficiencies. Any reply should be entitled "Request for Reconsideration of Petition Under 37 CFR 1.47(a)," and should only address the deficiencies noted below, except that the reply may include an oath or declaration executed by the non-signing inventor. **FAILURE TO RESPOND WILL RESULT IN ABANDONMENT OF THE APPLICATION.** Extensions of time may be obtained in accordance with 37 CFR 1.136(a).

The above-identified application was filed on 6 April, 2004, without an executed oath or declaration. Accordingly, on 21 June, 2004, Initial Patent Examination Division mailed a Notice to File Missing Parts of Nonprovisional Application, requiring an executed oath or declaration and a surcharge for its late filing. A two (2) month period for reply was set.

In response, on 21 December, 2004, a petition under 37 CFR 1.47(a), and a four (4) month extension of time and fee were filed. A declaration naming Nicte Coronado, Fermin Ruiz, and Jorge Santisteban and signed by joint inventor Santisteban were also filed.

On 30 December, 2004, Initial Patent Examination Division mailed a Notice of Incomplete Reply (Nonprovisional) stating that the signatures of joint inventors Coronado and Ruiz were missing from the oath or declaration and that the surcharge had not been received.

In response, on 6 January, 2005, the present communication was filed. Petitioners assert that the papers filed on 21 December, 2004, contained authorization to charge the petition fee and should be treated as a petition under 37 CFR 1.47(a) filed on that date. Additionally, on 2 February, 2005, a declaration containing the signature of joint inventor Coronado was filed.

Upon a review of the record, it is noted that the petition for extension of time filed on 21 December, 2004, accompanied by the paper styled as a petition under 37 CFR 1.47(a) did authorize the USPTO to charge "any other fee that may now be due" to counsel's deposit account. As such, the showing of record is that petitioners did authorize the USPTO to charge the petition fee required under 37 CFR 1.47(a) on 21 December, 2004, and that a petition under 37 CFR 1.47(a) was therefore filed on that date. As such, the petition under 37 CFR 1.47(a) will be considered to have been filed on 21 December, 2004. The late-filing surcharge will also be considered to have been filed on 21 December, 2004. Additionally, as a declaration signed by joint inventor Coronado has subsequently been filed, the present petition will be construed as asserting that joint inventor Ruiz is the only nonsigning inventor.

A grantable petition under 37 CFR 1.47(a) requires:

(1) proof that the non-signing inventor cannot be reached or located, notwithstanding diligent effort, or refuses to sign the oath or declaration after having been presented with the application papers (specification, claims and drawings);
(2) an acceptable oath or declaration in compliance with 35 U.S.C. §§ 115 and 116;
(3) the petition fee;
(4) a surcharge of $130 or $65 (small entity) if the petition and/or declaration is not filed at the time of filing the application, and
(5) a statement of the last known address of the non-signing inventor.

The petition lacks item (1).

In regards to item (1), petitioners have not provided proof that Ruiz was ever sent or presented with a copy of the application as filed (specification, including claims, drawings, if any, and the declaration).[1] In order for a Rule 47 petition to be granted, the inventor **must** be afforded an opportunity to review the application.[2] Petitioners may show proof that a copy of the application was sent or given to the non-signing inventor for review by providing a copy of the cover letter transmitting the application papers (specification, including claims, drawings, if any, and the declaration) to the non-signing inventor or details given in an affidavit or declaration of facts by a person having first-hand knowledge of the details.

Likewise, before a *bona fide* refusal to sign the declaration can be alleged, petitioners must show that a copy of the application was sent or given to the inventor. If the inventor refuses in writing, petitioners must submit a copy of that written refusal with any renewed petition. If the refusal was made orally to a person, then that person must provide details of the refusal in an affidavit or declaration of facts.

If the envelope sent to the non-signing inventor at the last known address is returned as undeliverable by the post office, petitioners should provide a copy of the envelope showing that the application was returned as undeliverable with any renewed petition. If the inventor refuses in writing to sign, a copy of that written refusal should be provided with any renewed petition. If the inventor refuses orally, petitioners should submit details of the refusal in an affidavit or declaration of facts by a person having first-hand knowledge of the refusal.

If repeated attempts to contact the non-signing inventor are unsuccessful, petitioners will have shown that despite diligent efforts, the inventor could not be reached.

The petition fee will be charged to counsel's deposit account, No. 23-0785.

Further correspondence with respect to this matter should be addressed as follows:

---

[1] MPEP 409.03(d).

[2] See In re Gray, 115 USPQ 80 (Comm'r Pat. 1956). The application papers must be sent or given to the non-signing inventor unless he or she refuses to accept delivery of the papers.

By mail: Mail Stop Petition
Commissioner for Patents
P.O. Box 1450
Alexandria, VA 22313-1450

By FAX: (703) 872-9306
Attn: Office of Petitions

By hand: Customer Service Window
Mail Stop Petition
Randolph Building
401 Dulany Street
Alexandria, VA 22314

Telephone inquiries related to this decision should be directed to the undersigned at 571-272-3231.

DWood

Douglas I. Wood
Senior Petitions Attorney
Office of Petitions

UNITED STATES PATENT AND TRADEMARK OFFICE

Commissioner for Patents
United States Patent and Trademark Office
P.O. Box 1450
Alexandria, VA 22313-1450
www.uspto.gov
DIW Sep-05

WOOD, PHILLIPS, KATZ, CLARK & MORTIMER
500 W. MADISON STREET
SUITE 3800
CHICAGO IL 60661-2511

COPY MAILED

SEP 3 0 2005

OFFICE OF PETITIONS

In re Application of	:
Coronado, Ruiz, and Santisteban	: DECISION NOTING JOINDER OF
Application No. 10/818,793	: INVENTOR AND PETITION
Filed: 6 April, 2004	: UNDER 37 CFR 1.47(a) MOOT
Atty Dckt No. PGI6044P2551US	:

Papers filed on 26 April, 2005, in response to the decision dismissing petition mailed on 18 April, 2005, included a Declaration signed by the previously non-signing inventor, Fermin Ruiz, in compliance with 37 CFR 1.63.

In view of the joinder of the inventor, further consideration under 37 CFR 1.47(a) is moot; this application does not have any rule 1.47(a) status and no such status should appear on the file wrapper. This application need not be returned to this office for any further consideration under 37 CFR 1.47(a).

This application will be referred to Technology Center 1771 for examination in due course.

Telephone inquiries related to this decision should be directed to the undersigned at (571) 272-3231.

D Wood

Douglas I. Wood
Senior Petitions Attorney
Office of Petitions

UNITED STATES PATENT AND TRADEMARK OFFICE

Commissioner for Patents
United States Patent and Trademark Office
P.O. Box 1450
Alexandria, VA 22313-1450
www.uspto.gov

EXXONMOBIL CHEMICAL COMPANY
P O BOX 2149
BAYTOWN TX 77522-2149

COPY MAILED
NOV 17 2004
OFFICE OF PETITIONS

In re Application of
Jean-Marc Francois
Application No. 10/818,801
Filed: April 6, 2004
Attorney Docket No. 2002B100/2

: DECISION REFUSING STATUS
: UNDER 37 CFR 1.47(b)

This is in response to the petition filed October 27, 2004 (October 21, 2004 certificate of mail date) under 37 CFR 1.47(b).

The petition is **DISMISSED**.

Rule 47 applicant is given TWO MONTHS from the mailing date of this decision to reply, correcting the below-noted deficiencies. Any reply should be entitled "Request for Reconsideration of Petition Under 37 CFR 1.47(b)," and should only address the deficiencies noted below, except that the reply may include an oath or declaration executed by the non-signing inventor. **FAILURE TO RESPOND WILL RESULT IN ABANDONMENT OF THE APPLICATION**. Extensions of time may be obtained in accordance with 37 CFR 1.136(a).

The above-identified application was filed on April 6, 2004 without an executed oath or declaration. Accordingly, on June 21, 2004, a "Notice To File Missing Parts of Nonprovisional Application" was mailed, requiring an executed oath or declaration and a surcharge for the late filing of the oath or declaration.

In response, on October 27, 2004, the present petition was filed, accompanied by the late filing surcharge and a two (2) month extension of time.

A grantable petition under 37 CFR 1.47(b) requires:

(1) proof that the non-signing inventor cannot be reached or refuses to sign the oath or declaration after having been presented with the application papers (specification, claims and drawings);

(2) an acceptable oath or declaration in compliance with 35 U.S.C. §§ 115 and 116;

(3) the petition fee;

(4) a statement of the last known address of the non-signing inventor;

(5) proof of proprietary interest, and

(6) proof of irreparable damage.

The petition lacks items (2), (3) and (6)

As to item (2), an oath or declaration for the patent application in compliance with 37 CFR 1.63 and 1.64 has not been presented. A declaration in compliance with 37 CFR 1.63, 1.64, and 1.67 must be presented, signed by all of the signing inventors, if any. If no inventor(s) will sign the declaration, the declaration may be signed on behalf of the inventor by an assignee. The oath or declaration must be signed by an officer of the corporation (president, vice president, secretary, or treasurer) on behalf of and as agent for the non-signing inventor(s). The officer must identify his/her title in the declaration, as well as his/her mailing address, residence, if the applicant lives at a different location from where he or she customarily receives mail, as well as the citizenship of individual signing on behalf of the non-signing inventor. If the oath or declaration is not signed by an officer of the corporation, then proof of authority of the person signing on behalf of the corporation must be submitted.[1]

As to item (6), petitioner must provide proof of irreparable damages in accordance with MPEP 409.03(g).

As to item (3), pursuant to the authorization in the petition to charge the deposit account for any deficiencies, deposit account no. 05-1712 has been charged in the amount of $130.00 for the petition fee as the authorization was for $550.00 and was specifically for the extension of time fee and for the late filing surcharge.

Further correspondence with respect to this matter should be addressed as follows:

By mail: Mail Stop Petition
Commissioner for Patents
P.O. Box 1450
Alexandria, VA 22313-1450

By FAX: (703) 872-9306

Telephone inquiries concerning this matter may be directed to the undersigned Petitions Attorney at (571) 272-3212.

Patricia Faison-Ball

Patricia Faison-Ball
Senior Petitions Attorney
Office of Petitions

---

[1] MPEP 409.03(b).

UNITED STATES PATENT AND TRADEMARK OFFICE

Commissioner for Patents
United States Patent and Trademark Office
P.O. Box 1450
Alexandria, VA 22313-1450
www.uspto.gov

EXXONMOBIL CHEMICAL COMPANY
P O BOX 2149
BAYTOWN TX 77522-2149

COPY MAILED

JAN 3 1 2005

OFFICE OF PETITIONS

In re Application of
Jean-Marc Francois
Application No. 10/818,801
Filed: April 6, 2004
Attorney Docket No. 2002B100/2

: DECISION REFUSING STATUS
: UNDER 37 CFR 1.47(b)

This is in response to the renewed petition filed under 37 CFR 1.47(b) on January 17, 2005.

The petition is **GRANTED**.

The above-identified application was filed on April 6, 2004 without an executed oath or declaration. Accordingly, on June 21, 2004, a "Notice To File Missing Parts of Nonprovisional Application" was mailed, requiring an executed oath or declaration and a surcharge for the late filing of the oath or declaration. In response, on October 27, 2004, a petition was filed, accompanied by the late filing surcharge and a two (2) month extension of time. On November 17, 2004, the petition was dismissed because an oath or declaration for the patent application in compliance with 37 CFR 1.63 and 1.64 had not been presented, the petition lacked proof of irreparable damage and notification was given that since the petition fee had not been submitted, the deposit account was charged for the petition.

A grantable petition under 37 CFR 1.47(b) requires:

(1) proof that the non-signing inventor cannot be reached or refuses to sign the oath or declaration after having been presented with the application papers (specification, claims and drawings);

(2) an acceptable oath or declaration in compliance with 35 U.S.C. §§ 115 and 116;

(3) the petition fee;

(4) a statement of the last known address of the non-signing inventor;

(5) proof of proprietary interest, and

(6) proof of irreparable damage.

In response to the decision dismissing the petition filed November 17, 2004, an oath or declaration executed by an officer of the Corporation, for the assignee and on behalf of the non-signing inventor as well as proof of irreparable damage has been presented. All requirements under 37 CFR 1.47(b) therefore having been met, as provided in Rule

1.47(c), this Office will forward notice of this application's filing to the non-signing inventor at the address given in the petition. Notice of the filing of this application will also be published in the Official Gazette.

This application is being forwarded to the Office of Initial Patent Examination for further pre-examination processing.

Telephone inquiries related to this decision should be directed to the undersigned Petitions Attorney at (571) 272-3212.

Patricia Faison-Ball

Patricia Faison-Ball
Senior Petitions Attorney
Office of Petitions

UNITED STATES PATENT AND TRADEMARK OFFICE

Commissioner for Patents
United States Patent and Trademark Office
P.O. Box 1450
Alexandria, VA 22313-1450
www.uspto.gov

COPY MAILED

JAN 3 1 2005

OFFICE OF PETITIONS

JEAN-MARC FRANCOIS
AVENUE DE PEVILLE 46-B4030
LIEGE (BELGIUM)

In re Application of
Jean-Marc Francois
Application No. 10/818,801
Filed: April 6, 2004
For: PROCESS FOR THE PRODUCTION OF IMPROVED METALLIZED FILMS

Dear Mr. Francois:

You are named as the sole inventor in the above identified United States patent application, filed under the provisions of 35 U.S.C. 116 (United States Code), and 37 CFR 1.47(a), Rules of Practice in Patent Cases. Should a patent be granted on the application you will be designated therein as the sole inventor.

As the named inventor you are entitled to inspect any paper in the file wrapper of the application, order copies of all or any part thereof (at a prepaid cost per 37 CFR 1.19) or make your position of record in the application. Alternatively, you may arrange to do any of the preceding through a registered patent attorney or agent presenting written authorization from you. If you care to join the application, counsel of record (see below) would presumably assist you. Joining in the application would entail the filing of an appropriate oath or declaration by you pursuant to 37 CFR 1.63.

Telephone inquiries regarding this communication should be directed to the undersigned Petitions Attorney at (571) 272-3212. Requests for information regarding your application should be directed to the File Information Unit at 703/308-2733. Information regarding how to pay for and order a copy of the application, or a specific paper in the application, should be directed to Certification Division at 703/308-9726 or 1-800-972-6382 (outside the Washington D.C. area).

Patricia Faison-Ball

Patricia Faison-Ball
Senior Petitions Attorney
Office of Petitions

cc:
EXXONMOBIL CHEMICAL COMPANY
P.O. BOX 2149
BAYTOWN TX 77522-2149

UNITED STATES PATENT AND TRADEMARK OFFICE

Commissioner for Patents
United States Patent and Trademark Office
P.O. Box 1450
Alexandria, VA 22313-1450
www.uspto.gov

COPY MAILED
NOV 2 8 2006
OFFICE OF PETITIONS

SCHWEGMAN LUNDBERG WOESSNER & KLUTH, P.A.
P.O. BOX 2938
MINNEAPOLIS, MN 55402

In re Application of :
Gerard Francis McLean et al :
Application No. 10/818,826 :
Filed: April 6, 2004 :
Attorney Docket No. 2269.035US1 :
:

DECISION ON PETITIONS
TO MAKE SPECIAL UNDER
37 CFR 1.102(c)(2)

This is a decision on the petition under 37 CFR 1.102(c)(2)(i), filed October 19, 2004, to make the above-identified application special based on the invention materially enhancing the quality of the environment as set forth in M.P.E.P. § 708.02, Section V. This is also a decision on the petition under 37 CFR 1.102(c)(2)(ii), filed October 19, 2004, to make the above-identified application special based on the invention materially contributing to the development or conservation of energy resources as set forth in M.P.E.P. § 708.02, Section VI.

The petition under 37 CFR 1.102(c)(2)(i) is **GRANTED**.

A grantable petition to make an application special under 37 CFR 1.102(c)(2)(i) and MPEP § 708.02, Section V: Environmental Quality, must state that special status is sought because the invention materially enhances the quality of the environment by contributing to the restoration or maintenance of basic life-sustaining natural elements. If the disclosure is not clear on its face that the claimed invention materially enhances the quality of the environment by contributing to the restoration or maintenance of one of the basic life-sustaining natural elements, the petition must be accompanied by a statement by the applicant, assignee, or an attorney/agent registered to practice before the Office explaining how the materiality standard is met. No fee is required.

The petition under 37 CFR 1.102(c)(2)(ii) is **GRANTED**.

A grantable petition to make an application special under 37 CFR 1.102(c)(2)(ii) and MPEP § 708.02, Section VI: Energy, must state how the invention materially contributes to (A) the discovery or development of energy resources, or (B) the more efficient utilization and conservation of energy resources. If the disclosure is not clear on its face that the claimed invention materially contributes category (A) or (B), the petition must be accompanied by a statement by the applicant, assignee, or an attorney/agent registered to practice before the Office explaining how the materiality standard is met. Examples of inventions in category (A) would be developments in fossil fuels (natural gas, coal, and petroleum), hydrogen fuel technologies, nuclear energy, solar energy, etc. Category (B) would include inventions relating to the reduction of energy consumption in combustion systems, industrial equipment, household appliances, etc. No fee is required.

The instant petitions include satisfactory statements. Accordingly, the above-identified applications have been accorded "special" status. Telephone inquiries concerning this decision should be directed to Petitions Examiner Irvin Dingle at 571-272-3210.

All other inquires concerning either the examination or status of the application should be directed to the Technology Center.

The application is being forwarded to the Technology Center Art Unit 1762 for action on the merits commensurate with this decision.

David Bucci
Petitions Examiner
Office of Petitions

UNITED STATES PATENT AND TRADEMARK OFFICE

UNITED STATES DEPARTMENT OF COMMERCE
United States Patent and Trademark Office
Address: COMMISSIONER FOR PATENTS
P.O. Box 1450
Alexandria, Virginia 22313-1450
www.uspto.gov

IBM CORPORATION
IPLAW SHCB/40-3
1701 NORTH STREET
ENDICOTT, NY 13760

Mail Date: 04/20/2010

Applicant	: Samuel David Borman	: DECISION ON REQUEST FOR
Patent Number	: 7660399	: RECALCULATION of PATENT
Issue Date	: 02/09/2010	: TERM ADJUSTMENT IN VIEW
Appliction No	: 10/818,837	: OF WYETH AND NOTICE OF INTENT TO
Filed	: 04/06/2004	: ISSUE CERTIFICATE OF CORRECTION
		:

The Request for Recalculation is **GRANTED** to the extent indicated.

The patent term adjustment has been determined to be **1069** days. The USPTO will *sua sponte* issue a certificate of correction reflecting the amount of PTA days determined by the recalculation.

Prior to the issuance of the certificate of correction, the USPTO will afford patentee an opportunity to be heard and request reconsideration. Accordingly, patentee has **one month or thirty (30) days**, whichever is longer, to file a request for reconsideration of this patent term adjustment calculation. See 35 U.S.C. 154(b)(3)(B)(ii) and 37 CFR 1.322(a)(4). No extensions of time will be granted under 37 CFR 1.136.

Patentee should use document code PET.OP if electronically filing a request for reconsideration of this patent term adjustment calculation. The patentee must also include the information required by 37 CFR 1.705(b)(2) and the fee required by 37 CFR 1.18(e). If patentee does not file a timely request for reconsideration of this patent term adjustment calculation including the information required by 37 CFR 1.705(b)(2) and the fee required by 37 CFR 1.18(e), the USPTO will issue a certificate of correction reflecting the PTA determination noted above.

Patentee should be aware that in order to preserve the right to review in the United States District Court for the District of Columbia of the USPTO patent term adjustment determination, patentee must ensure that he or she also take the steps required under 35 U.S.C. 154(b)(4)(A) in a timely manner. Nothing in the request for recalculation should be construed as providing an alternative time frame for commencing a civil action under 35 U.S.C. 154(b)(4)(A).

Any questions concerning this decision should be directed to the Office of Patent Legal Administration at 571-272-7702.

10-20-04

IFW

OIPE JC185 OCT 1 9 2004 PATENT & TRADEMARK OFFICE

FILE COPY

IN THE UNITED STATES PATENT AND TRADEMARK OFFICE

In re Application of:	)	
Duhane Lam, Gerard Francis McLean,	)	
Olen Richard Vanderleeden	)	**Group Art Unit:** 746
Serial No.: 10/818,843	)	
Filed: April 6, 2004	)	
For: Fuel Cell Layer with Reactor Frame	)	

PETITION GRANTED

William Krynski
Special Program Examiner
TC 1700
2-10-05

Mail Stop Petition
Commissioner for Patents
P.O. Box 1450
Alexandria, VA 22313-1450

Certificate of Express Mail

I hereby certify that this correspondence is being deposited with the United States Postal Service as "Express Mail Post Office to Addressee" Express Mail No. **ER 896 593 707 US** in an envelope addressed to MAIL STOP PETITION; Commissioner for Patents; PO Box 1450; Alexandria, VA, 22313-1450, on the following date: October 19, 2004.

Christian Heausler

Christian Heausler

PETITION TO MAKE SPECIAL UNDER 37 C.F.R. § 1.102(C)

Applicants hereby petition the Commissioner pursuant to 37 C.F.R. § 1.102(c) to accord "special status" to the above-identified patent application for the reasons set forth below. Applicants believe that no fee is due in connection with this petition. The basis for this petition (in accordance with MPEP §708.02 V and VI) is that the Applicants' present embodiments materially enhance the quality of the environment and materially contribute to the development or conservation of energy resources.

10/22/2004 MAHMED1 00000013 501313 10818843
01 FC:1460 130.00 DA

UNITED STATES PATENT AND TRADEMARK OFFICE

Commissioner for Patents
United States Patent and Trademark Office
P.O. Box 1450
Alexandria, VA 22313-1450
www.uspto.gov

BEUSSE WOLTER SANKS MORA & MAIRE, P.A.
390 NORTH ORANGE AVENUE
SUITE 2500
ORLANDO, FL 32801

COPY MAILED

NOV 27 2009

OFFICE OF PETITIONS

In re Application of
Pouya Taaghol et al
Application No. 10/818,850
Filed: April 5, 2004
Attorney Docket No. AZNE-08

ON PETITION

This is a decision on the petition filed September 30, 2009 under 37 CFR 1.137(b), to revive the above-identified application.

The petition is **GRANTED.**

The above-identified application became abandoned for failure to submit the Issue fee in a timely manner in reply to the Notice of Allowance mailed December 4, 2008, which set a statutory period for reply of three (3) months. Accordingly, the above-identified application became abandoned on March 5, 2009.

The petition satisfies the conditions for revival pursuant to the provisions of 37 CFR 1.137(b) in that (1) the reply in the form of payment of the Issue fee; (2) the petition fee; (3) the required statement of unintentional delay have been received. Accordingly, the issue fee is accepted as having been unintentionally delayed.

Telephone inquiries concerning this decision should be directed to the undersigned at (571) 272-3210.

This matter is being referred to the Office of Data Management for further processing.

Irvin Dingle
Petitions Examiner
Office of Petitions

UNITED STATES PATENT AND TRADEMARK OFFICE

Commissioner for Patents
United States Patent and Trademark Office
P.O. Box 1450
Alexandria, VA 22313-1450
www.uspto.gov

TOWNSEND AND TOWNSEND AND CREW, LLP
TWO EMBARCADERO CENTER
EIGHTH FLOOR
SAN FRANCISCO, CA 94111-3834

COPY MAILED

AUG 16 2006

OFFICE OF PETITIONS

In re Application of	:	
Unemori	:	
Application No. 10/818,859	:	DECISION ON PETITION
Filed: April 5, 2004	:	TO WITHDRAW
Attorney Docket No. 021663-001430US	:	FROM RECORD
	:	

This is a decision on the Request to Withdraw as attorney or agent of record under 37 C.F.R. § 1.36(b), filed March 15, 2006.

The request is **DISMISSED** as moot.

A review of the file record indicates that the power of attorney to Townsend and Townsend and Crew, LLP has been revoked by the assignee of the patent application on January 26, 2006. Accordingly, the request to withdraw under 37 C.F.R. § 1.36(b) is moot.

All future communications from the Office will continue to be directed to the below-listed address until otherwise notified by applicant.

Telephone inquires concerning this decision should be directed to April Wise at 571-272-1642.

Denise Pothier
Petitions Examiner
Office of Petitions

cc: DAHNA PASTERNAK
ROBINS & PASTERNAK
1731 EMBARCADERO ROAD
SUITE 230
PALO ALTO CA 94303

UNITED STATES PATENT AND TRADEMARK OFFICE

UNITED STATES DEPARTMENT OF COMMERCE
United States Patent and Trademark Office
Address: COMMISSIONER FOR PATENTS
P.O. Box 1450
Alexandria, Virginia 22313-1450
www.uspto.gov

APPLICATION NO.	FILING DATE	FIRST NAMED INVENTOR	ATTORNEY DOCKET NO.	CONFIRMATION NO.
10/818,859	04/05/2004	Elaine N. Unemori	1100-0003.02 (BAS003CON2)	4665

20855 7590 04/17/2008
ROBINS & PASTERNAK
1731 EMBARCADERO ROAD
SUITE 230
PALO ALTO, CA 94303

EXAMINER
KAUFMAN, CLAIRE M

ART UNIT	PAPER NUMBER
1646	

MAIL DATE	DELIVERY MODE
04/17/2008	PAPER

Please find below and/or attached an Office communication concerning this application or proceeding.

The time period for reply, if any, is set in the attached communication.

PTO/SB/83 (01-06)
Approved for use through 12/31/2008. OMB 0651-0035
U.S. Patent and Trademark Office, U.S. DEPARTMENT OF COMMERCE
Under the Paperwork Reduction Act of 1995, no persons are required to respond to a collection of information unless it displays a valid OMB control number.

REQUEST FOR WITHDRAWAL AS ATTORNEY OR AGENT AND CHANGE OF CORRESPONDENCE ADDRESS

Application Number	10/818,859
Filing Date	April 5, 2004
First Named Inventor	UNEMORI
Art Unit	1646
Examiner Name	C. Kaufman
Attorney Docket Number	1100-0003.02

To: Commissioner for Patents
P.O. Box 1450
Alexandria, VA 22313-1450

Please withdraw me as attorney or agent for the above identified patent application, and

☐ all the attorneys/agents of record.

☐ the attorneys/agents (with registration numbers) listed on the attached paper(s), or

☑ the attorneys/agents associated with Customer Number 20855

NOTE: This box can only be checked when the power of attorney of record in the application is to all the practitioners associated with a customer number.

The reasons for this request are: In an email dated February 15, 2008, our client requested that we transfer the file to another firm.

CORRESPONDENCE ADDRESS

1. ☐ The correspondence address is NOT affected by this withdrawal.
2. ☑ Change the correspondence address and direct all future correspondence to:

☐ The address associated with Customer Number:

Approved APR 17 2008
Jacqueline M. Stone, Director
Technology Center 1700/2900

OR

☑ Firm *or* Individual Name	Michael R. Ward Morrison & Foerster LLP				
Address	425 Market Street				
City	San Francisco	State	CA	Zip	94105-2482
Country	USA				
Telephone		Email	mward@mofo.com		
Signature	DPasternak				
Name	Dahna S. Pasternak	Registration No.	41,411		
Date	February 20, 2008	Telephone No.	(650) 493-3400		

NOTE: Withdrawal is effective when approved rather than when received. Unless there are at least 30 days between approval of withdrawal and the expiration date of a time period for response or possible extension period, the request to withdraw is normally disapproved.

This collection of information is required by 37 CFR 1.36. The information is required to obtain or retain a benefit by the public which is to file (and by the USPTO to process) an application. Confidentiality is governed by 35 U.S.C. 122 and 37 CFR 1.11 and 1.14. This collection is estimated to take 12 minutes to complete, including gathering, preparing, and submitting the completed application form to the USPTO. Time will vary depending upon the individual case. Any comments on the amount of time you require to complete this form and/or suggestions for reducing this burden, should be sent to the Chief Information Officer, U.S. Patent and Trademark Office, U.S. Department of Commerce, P.O. Box 1450, Alexandria, VA 22313-1450. DO NOT SEND FEES OR COMPLETED FORMS TO THIS ADDRESS. **SEND TO: Commissioner for Patents, P.O. Box 1450, Alexandria, VA 22313-1450.**

If you need assistance in completing the form, call 1-800-PTO-9199 and select option 2.

UNITED STATES PATENT AND TRADEMARK OFFICE

Commissioner for Patents
United States Patent and Trademark Office
P.O. Box 1450
Alexandria, VA 22313-1450
www.uspto.gov

COPY MAILED
OCT 0 2 2006
OFFICE OF PETITIONS

Mars Turner
3706 Lowry Dr.
North Highlands, CA 95660

In re Application of	:	
Mars Turner Sterling	:	
Application No.: 10/818,864	:	ON PETITION
Filed: April 6, 2004	:	
Attorney Docket No:	:	

This is in response to the petition under 37 CFR 1.137(b) filed May 19, 2006.

The petition is **dismissed.**

Any request for reconsideration of this decision must be submitted within TWO (2) MONTHS from the mail date of this decision. Extensions of time under 37 CFR 1.136(a) are permitted. The reconsideration request should include a cover letter entitled "Renewed Petition" under 37 CFR 1.137(b)."

This application became abandoned for failure to respond in a timely manner to the Notice of Non-Compliant Amendment mailed September 19, 2005. The notice set a shortened statutory period for reply of three-months from its mailing date. Extensions of time were available pursuant to 37 CFR 1.136(a). No response was received within the allowable period. The application became abandoned on November 20, 2005. A Notice of Abandonment was mailed on April 28, 2006.

Effective December 1, 1997, the provisions of 37 CFR 1.137(b) now provide that where the delay in reply was unintentional, a petition may be filed to revive an abandoned application or a lapsed patent pursuant to 37 CFR 1.137(b). A grantable petition pursuant to 37 CFR 1.137(b) must be accompanied by:

(1) the required reply, unless previously filed. In a non-provisional application abandoned for failure to prosecute, the required reply may be met by the filing of a continuing application. In an application or patent, abandoned or lapsed for failure to pay the issue fee, or any portion thereof, the required reply must be the payment of the issue fee or any outstanding balance thereof.

(2) the petition fee as set forth in 37 CFR 1.17(m);

(3) a statement that the entire delay in filing the required reply from the due date for the reply until the filing of a grantable petition pursuant to 37 CFR 1.137(b) was unintentional. The Commissioner may require additional information where there is a question whether the delay was unintentional; and

(4) any terminal disclaimer (and fee set forth in 37 CFR 1.20(d)) required pursuant to 37 CFR 1.137(c).

The instant petition does not satisfy the requirement of item (1) above.

Item (1) above has not been satisfied because of the failure to file a proper reply to the Notice of Non-Compliant Amendment. A successful petition under 37 CFR 1.137(b) must be accompanied by a proper response to the outstanding office action. In this case, such a response would be an amendment or a continuing application. The petition is dismissed, accordingly. Questions regarding the preparation of a response may be directed to Technology Center 3700, GAU 3748, or to the Inventor Assistance Center at 1-800-PTO-9199.

Further correspondence with respect to this matter should be addressed as follows:

By mail:

Mail Stop Petitions
Commissioner for Patents
United States Patent and Trademark Office
Box 1450
Alexandria, VA 22313-1450

By facsimile: (571) 273-8300
Attn: Office of Petitions

Telephone inquiries concerning this decision may be directed to the undersigned at (571) 272-3222.

Kenya A. McLaughlin

Kenya A. McLaughlin
Petitions Attorney
Office of Petitions

UNITED STATES PATENT AND TRADEMARK OFFICE

Commissioner for Patents
United States Patent and Trademark Office
P.O. Box 1450
Alexandria, VA 22313-1450
www.uspto.gov

HOLLAND & HART, LLP
P.O BOX 8749
DENVER CO 80201

COPY MAILED

AUG 04 2008

OFFICE OF PETITIONS

In re Application of

Mars Turner Sterling

Application No. 10/818,864

Filed: April 6, 2004

Attorney Docket No.

: DECISION ON PETITION

This is a decision on the petition under 37 CFR 1.137(b), filed April 28, 2008, to revive the above-identified application.

The petition is **GRANTED**.

The above-cited application became abandoned for failure to reply in a timely manner to the Notice of Non-Compliant Amendment mailed September 19, 2005, which set a shortened period for reply of three (3) months from its mailing date. No extensions of time were obtained within the allowable period. Accordingly, the application became abandoned on December 20, 2005. A Notice of Abandonment was mailed on April 28, 2006.

The amendment filed April 28, 2008, is noted.

The address cited on the petition differs from the address of record. Although a courtesy copy of this decision is being mailed to the address cited on the petition, all future correspondence will be mailed solely to the address of record until appropriate written instructions to the contrary are received.

The application is being forwarded to Technology Center 3700, GAU 3748 for further processing.

Telephone inquiries concerning this decision should be directed to the undersigned at (571) 272-3222.

Kenya A. McLaughlin
Petitions Attorney
Office of Petitions

cc:
Brian Kinnear
555 17th Street, Suite 3200
Denver, CO 80202

UNITED STATES PATENT AND TRADEMARK OFFICE

COMMISSIONER FOR PATENTS
UNITED STATES PATENT AND TRADEMARK OFFICE
P.O. BOX 1450
ALEXANDRIA, VA 22313-1450
www.uspto.gov

SEP 23 2004

In re Application of	:	
Anthony G. Tadin	:	
Serial No. 10/818,880	:	DECISION ON PETITION
Filed: April 5, 2004	:	TO MAKE SPECIAL
For: USER-CUSTOMIZABLE INSOLES	:	
FOR FOOTWEAR AND METHOD	:	
OF CUSTOMIZING INSOLES	:	

Applicant's petition, filed April 5, 2004, requests that this application be rendered special for examination in that applicant is over sixty-five (65) years of age.

The petition has been reviewed and is found to be in compliance with the requirements for special status as set forth in Section 708.02(IV) of the Manual of Patent Examining Procedure (MPEP).

PETITION GRANTED.

E. Rollins-Cross, Director
Technology Center 3700

Law Office of Brian R. Rayve
P.O. Box 11586
Salt Lake City, UT 84147-0586

UNITED STATES PATENT AND TRADEMARK OFFICE

Commissioner for Patents
United States Patent and Trademark Office
P.O. Box 1450
Alexandria, VA 22313-1450
www.uspto.gov

LAW OFFICE OF BRIAN R. RAYVE
P.O. Box 11586
Salt Lake City, UT 84147-0586

COPY MAILED

MAY 3 0 2007

OFFICE OF PETITIONS

In re Application of Tadin :
Application No. 10/818,880 :
Filing Date: April 5, 2004 :
Attorney Docket No. 015-1-001 :

Decision on Petition

This is a decision on the petition under 37 CFR 1.137(b), filed January 3, 2007, to revive the above-identified application.

The petition is **granted**.

The above-identified application became abandoned for failure to reply in a timely manner to the non-final Office action mailed March 14, 2005, which set a shortened statutory period for reply of three (3) months. An extension of time under the provisions of 37 CFR 1.136(a) was not obtained. Accordingly, the above-identified application became abandoned on June 15, 2005. A Notice of Abandonment was mailed on May 23, 2006.

The instant petition requests revival of the application.

Petitioner has met the requirements to revive the above-identified application pursuant to 37 CFR 1.137(b). Therefore, the petition is granted and the application is revived.

Technology Center Art Unit 3728 will be informed of the instant decision and the application will be further examined in due course.

Telephone inquiries regarding this communication should be directed to Petitions Attorney Steven Brantley at (571) 272-3203.

Charles Steven Brantley
Senior Petitions Attorney
Office of Petitions

UNITED STATES PATENT AND TRADEMARK OFFICE

Commissioner for Patents
United States Patent and Trademark Office
P.O. Box 1450
Alexandria, VA 22313-1450
www.uspto.gov

COPY MAILED

MAR 30 2007

OFFICE OF PETITIONS

MELVIN K. SILVERMAN
500 WEST CYPRESS CREEK ROAD
SUITE 500
FT. LAUDERDALE FL 33309

RECEIVED

MAR 30 2007

OFFICE OF PETITIONS

CANCELLED

In re Patent No. 7,128,660 :
Issued: October 31, 2006 :
Application No. 10/818,899 : ON PETITION
Filed: April 3, 2004 :
Attorney Docket Number: 3036.008 :

This is a decision on the petition, filed January 18, 2007, under 37 CFR 3.81(b)[1], to correct the assignee's name on the front of the Patent.

The petition is **GRANTED**.

Petitioner states that the assignee is TRIPLE TEE GOLF, INC., and that the failure to include the correct assignee name on the Fee(s) Transmittal form PTOL-85(b) was inadvertent. Accordingly, petitioner requests that a certificate of correction be issued to reflect the correct assignee on the front page of the Letters Patent.

37 CFR 3.81(b), effective June 25, 2004, reads:

> *After payment of the issue fee:* Any request for issuance of an application in the name of the assignee submitted after the date of payment of the issue fee, and any request for a patent to be corrected to state the name of the assignee, must state that the assignment was submitted for recordation as set forth in § 3.11 before issuance of the patent, and must include a request for a certificate of correction under § 1.323 of this chapter (accompanied by the fee set forth in § 1.20(a) and the processing fee set forth in § 1.17(i) of this chapter.

The request is accompanied by a certificate of correction (and fee) as required by 3.81(b). Further, Office assignment records reflect that TRIPLE TEE GOLF, INC. is the assignee of record. Accordingly, as the request complies with the provisions of 37 CFR 3.81(b), it would be appropriate for a certificate of correction to issue.

---

[1] *See* Official Gazette of June 22, 2004

Inquiries concerning this decision should be directed to the undersigned at (571) 272-3212. Any questions concerning the issuance of a certificate of correction should be directed to the Certificates of Correction Branch at (703) 305-8309.

This matter is being referred to the Certificates of Correction Branch for issuance of a certificate of correction.

Patricia Faison-Ball

Patricia Faison-Ball
Senior Petitions Attorney
Office of Petitions

UNITED STATES PATENT AND TRADEMARK OFFICE

Commissioner for Patents
United States Patent and Trademark Office
P.O. Box 1450
Alexandria, VA 22313-1450
www.uspto.gov

LAW FIRM OF DAN SHIFRIN
6208 DEVINNEY CIRCLE
ARVADA CO 80004

MAILED
JUL 07 2009
OFFICE OF PETITIONS

In re Application of	:	
Brian G. Goodman et al	:	
Application No. 10/818,907	:	DECISION ON PETITION
Filed: April 6, 2004	:	
Attorney Docket No. TUC920030182US1	:	

This is a decision on the petition under the unintentional provisions of 37 CFR 1.137(b), filed March 31, 2009, to revive the above-identified application.

The petition is **GRANTED**.

The petition satisfies the conditions for revival pursuant to the provisions of 37 CFR 1.137(b) in that (1) the reply in the form of an RCE and an amendment; (2) the petition fee; and (3) the required statement of unintentional delay have been received. Accordingly, the reply to the final rejection mailed July 3, 2008, is accepted as having been unintentionally delayed.

Telephone inquiries concerning this decision should be directed to the undersigned at (571) 272-3208.

This application is being referred to Technology Center AU 2114 for appropriate action by the Examiner in the normal course of business on the reply received March 31, 2009.

/KOC/
Karen Creasy
Petitions Examiner
Office of Petitions

UNITED STATES PATENT AND TRADEMARK OFFICE

Commissioner for Patents
United States Patent and Trademark Office
P.O. Box 1450
Alexandria, VA 22313-1450
www.uspto.gov

OBLON, SPIVAK, MCCLELLAND MAIER & NEUSTADT, PC
1940 DUKE STREET
ALEXANDRIA, VA 22314

COPY MAILED

NOV 30 2007

OFFICE OF PETITIONS

In re Application of	:	
Donald V. Smart	:	
Application No. 10/818,920	:	DECISION ON PETITION
Filed: April 6, 2004	:	TO MAKE SPECIAL UNDER
Attorney Docket No. 282046US2S CONT	:	37 CFR 1.102(c)(1)
	:	

This is a decision on the petition under 37 CFR 1.102(c)(1), filed October 22, 2007, to make the above-identified application special based on applicant's age as set forth in M.P.E.P. § 708.02, Section IV.

The petition is **GRANTED**.

A grantable petition to make an application special under 37 CFR 1.102(c)(1) and MPEP § 708.02, Section IV: Applicant's Age must be accompanied by evidence showing that at least one of the applicants is 65 years of age, or more, such as a birth certificate or a statement by applicant. No fee is required

The instant petition includes a declaration statement signed by applicant. Accordingly, the above-identified application has been accorded "special" status.

Telephone inquiries concerning this decision should be directed to undersigned at 571-272-1642.

All other inquiries concerning either the examination or status of the application should be directed to the Technology Center.

The application is being forwarded to the Technology Center Art Unit 2815 for action on the merits commensurate with this decision.

April M. Wise
Petitions Examiner
Office of Petitions

SPE: J. Barlow

SPE RESPONSE FOR CERTIFICATE OF CORRECTION

Paper No.: _____

DATE : 11/20/06

TO SPE OF : ART UNIT 2863

SUBJECT : Request for Certificate of Correction for Appl. No.: 10/818,921 Patent No.: 7089151

Please respond to this request for a certificate of correction within 7 days.

Please review the requested changes/corrections as shown in the **COCIN** document(s) in the IFW application image. No new matter should be introduced, nor should the scope or meaning of the claims be changed.

Please complete the response (see below) and forward the completed response to scanning using document code **COCX**.

Lamonte M. Newsome
Certificates of Correction Branch
703-308-9390 ext. 112

Thank You For Your Assistance

The request for issuing the above-identified correction(s) is hereby:
Note your decision on the appropriate box.

- [x] **Approved** — **All** changes apply.
- [ ] **Approved in Part** — Specify below which changes **do not** apply.
- [ ] **Denied** — State the reasons for denial below.

Comments: _____

J E Barlow
SPE

2863
Art Unit

PTOL-306 (REV. 7/03)

U.S. DEPARTMENT OF COMMERCE Patent and Trademark Office

John Barlow
Supervisory Patent Examiner
Technology Center 2800

UNITED STATES PATENT AND TRADEMARK OFFICE

Commissioner for Patents
United States Patent and Trademark Office
P.O. Box 1450
Alexandria, VA 22313-1450
www.uspto.gov

NATIONAL IP RIGHTS CENTER, LLC
SUITE 400
550 TOWNSHIP LINE ROAD
BLUE BELL, PA 19422

COPY MAILED

SEP 19 2007

OFFICE OF PETITIONS

In re Application of :
Wilson, Douglas Dale :
Application No. 10/818,936 :
Filed: April 5, 2004 :
Attorney Docket No. 11023-1 :

ON PETITION

This is a decision on the petition under 37 C.F.R. § 1.137(b), filed September 4, 2007, to revive the above-identified application.

The petition is **GRANTED.**

The petition satisfies the conditions for revival pursuant to the provisions of 37 CFR 1.137(b) in that (1) the reply in the form of payment of the issue and publication fees; (2) the petition fee; and (3) the required statement of unintentional delay have been received. Accordingly, the response has been accepted as having been unintentionally delayed.

There is no indication that petitioner has submitted an Issue Fee Transmittal Form (PTOL-85b). Accordingly, if petitioner desires to have the information normally found thereon printed on the patent, the attached blank Issue Fee Transmittal Form should be completed and returned to the Publishing Division within **ONE MONTH** from the mail date of this decision.

The file does not indicate a change of address has been submitted, although the address given on the petition differs from the address of record. If appropriate, a request to change the address of record should be filed. A courtesy copy of this decision is being mailed to the address given on the petition; however, the Office will mail all future correspondence solely to the address of record.

This matter is being referred to the Publishing Division for further processing.

Telephone inquiries regarding this decision should be directed to the undersigned at (571) 272-3206.

Liana Walsh
Petitions Examiner
Office of Petitions

Enclosure: PTOL-85b

Cc: DOUGLAS WILSON
8933 NE AFTON ROAD
KANSAS CITY, MO 64155

UNITED STATES PATENT AND TRADEMARK OFFICE

Commissioner for Patents
United States Patent and Trademark Office
P.O. Box 1450
Alexandria, VA 22313-1450
www.uspto.gov

BACHMAN & LAPOINTE, P.C.
900 CHAPEL STREET
SUITE 1201
NEW HAVEN CT 06510

11/27/07

In re Application of
TOPAL, VALERIY I.
Serial No.: 10/818,962
Filed: Apr. 6, 2004
Docket: 085.UKR34-US(03-503)
Title: DEPOSITION REPAIR OF HOLLOW ITEMS

DECISION ON PETITION TO WITHDRAW FINALITY OF REJECTION AS PREMATURE UNDER 37 CFR 1.181

This is a decision on the petition filed on Aug. 20, 2007 by which petitioner requests withdrawal of the finality of the Office Action dated Jul. 25, 2007. The petition is considered pursuant to 37 CFR 1.181, and no fee is required.

The petition is **dismissed**.

A review of the relevant prosecution history shows that the applicant filed the original claims on Apr. 6, 2004. After applicant's election of inventions, on Jan. 23, 2007, the examiner rejected all elected claims 1-19 under the Foster et al. U.S. Pat. 4,726,104 In response to the non-final Office action, on Apr. 26, 2007, the applicant field an amendment to claims 1 and 18 and added new claims 26-30. On Jul. 25, 2007, the examiner issued a final Office Action and rejected claims 1-19 and new claims 26 -27 under a new prior art reference Demo et al. US Pat. 5,511,721 and Messelling US Pat. 6,460,754[1].

On Aug. 20, 2007, the applicant filed the current petition requesting a withdrawal of the finality of the previous Office Action. The petitioner is of the opinion that the Final Office Action was premature. In particular, the petitioner states that the new grounds of rejection of claims were not necessitated by the applicant's amendment of Apr. 26, 2007 since the applicant's amended claim 1 merely involved incorporating an element from its dependent claim 18.

[1] Newly cited references added in the Final rejection of claims 1-19 and new claims 26-30.

Analysis of Application Record

MPEP 706.07(a) states in part: "Under present practice, second or any subsequent actions on the merits shall be final, *except where the examiner introduces a new ground of rejection that is neither necessitated by applicant's amendment of the claims* nor based on information submitted in an information disclosure statement filed during the period set forth in 37 CFR 1.97(c) with the fee set forth in 37 CFR 1.17(p)." (*Emphasis added*).

In order to determine whether or not the original independent claim 1 and dependent claim 18 are identical in scope, a comparison of the claims must be made. Original independent claim 1 and dependent claim 18 filed on Apr. 6, 2004 are reproduced below:

1. A method for restoring a component having an internal space and which has lost first material from a damage site comprising: placing at least a first portion of a sacrificial element within the internal space; depositing a repair material at least partially in place of the first material; and removing the sacrificial element.

18. The method of claim 1 wherein the placing comprises trimming a pre-formed insert.

The newly amended independent claim 1 and dependent claim 18 as filed on Apr. 26, 2007 are also reproduced below:

1. (Currently amended) A method for restoring a component having an internal space and which has lost first material from a damage site comprising: placing at least a first portion of a <u>pre-formed</u> sacrificial element within the internal space; depositing a repair material at least partially in place of the first material; and removing the sacrificial element.

18. (Currently amended) The method of claim 1 wherein the placing comprises trimming a pre-formed insert <u>to form the sacrificial element</u>.

A comparison of original independent claim 1 with the new independent claim 1 reveals two differences which change the scope of the original independent claim 1. The first difference is that the claims now recite two pre-formed sacrificial elements. Specifically, amended Claim 1 recites "a pre-formed sacrificial element" and amended Claim 18 recites "a pre-formed insert". Another difference is, when read in context, the limitation "<u>placing</u> at least a first portion of a <u>pre-formed</u> sacrificial element" as recited in amended claim 1 is not disclosed by the prior art reference Foster et al., which was applied in the non-final rejection of Jan. 23, 2007. As originally claimed, the claims did not require that a "pre-formed sacrificial element" is first placed within an "internal space" as recited in claim 1 and then "trimming a pre-formed insert" as recited in claim 18. In view of the newly added limitations changing the scope of the claims, the examiner needed to conduct a new search and discover the Demo et al. reference in order to reject amended claims 1 and 18. Therefore, the new limitations added to claims 1 and 18 in the amendment filed on Apr. 26, 2007 necessitated the new grounds of rejection mailed on Jul. 25, 2007.

Conclusion

Based on the analysis of the record, the examiner was correct in finding that the amended independent claim 1 and dependent claim 18 differed in scope from the original independent

claim 1 and dependent claim 18. Accordingly, the change in scope of claims 1 and 18 resulted in the new grounds of rejection in the final Office action of Jul. 25, 2007 and was necessitated by applicant's amendment of Apr. 26, 2007. The petition is, therefore, dismissed.

The application is being forwarded to the Supervisory Patent Examiner of Art Unit 3726 pending the filing of a proper reply to the final rejection. Petitioner may file a request for reconsideration of this decision, without fee. However, such a request must be filed within two months of the date of this decision. See 37 CFR 1.181. Any inquiry regarding this decision should be directed to Henry Yuen, Special Programs Examiner, at (571) 272-4856.

PETITION DISMISSED.

Frederick R. Schmidt, Director
Technology Center 3700

SPE RESPONSE FOR CERTIFICATE OF CORRECTION

Paper No.: 11/10/05

DATE : 11-7-05

TO SPE OF : ART UNIT 1651

SUBJECT : Request for Certificate of Correction on Patent No.: 6955913

A response is requested with respect to the accompanying request for a certificate of correction.

Please complete this form and return with file, within 7 days to:
Palm location **7580, Certificates of Correction Branch – South Tower – 9A22**
If response is for an IFW, **return to employee (named below) via PUBSCofC Team in MADRAS.**
With respect to the change(s) requested, correcting Office and/or Applicant's errors, should the patent read as shown in the certificate of correction (COCIN)? No new matter should be introduced, nor should the scope or meaning of the claims be changed.

Should left out inventor be added? Thanks

EVA JAMES

Thank You For Your Assistance

Certificates of Correction Branch
Tel. No. 703-308-9309 ext. 116

The request for issuing the above-identified correction(s) is hereby:
Note your decision on the appropriate box.

- ☑ **Approved** — **All** changes apply.
- ☐ **Approved in Part** — Specify below which changes **do not** apply.
- ☐ **Denied** — State the reasons for denial below.

Comments:

SPE

1651
Art Unit

UNITED STATES PATENT AND TRADEMARK OFFICE

Commissioner for Patents
United States Patent and Trademark Office
P.O. Box 1450
Alexandria, VA 22313-1450
www.uspto.gov

HEWLETT PACKARD COMPANY
P.O. BOX 272400, 3404 E. HARMONY ROAD
INTELLECTUAL PROPERTY ADMINISTRATION
FORT COLLINS, CO 80527-2400

COPY MAILED
JUN 13 2007
OFFICE OF PETITIONS
Cancelled

COPY MAILED
JUN 12 2007
OFFICE OF PETITIONS

In re Application of
Kevin David Safford et al
Application No. 10/818,975
Filed: April 6, 2004
Attorney Docket No. 200309969-1

ON PETITION

This is a decision on the petition, filed June 11, 2007 under 37 CFR 1.313(c)(2) to withdraw the above-identified application from issue after payment of the issue fee.

The petition is **GRANTED**.

The above-identified application is withdrawn from issue for consideration of a submission under 37 CFR 1.114 (request for continued examination). See 37 CFR 1.313(c)(2).

Petitioner is advised that the issue fee paid on May 23, 2007 in the above-identified application cannot be refunded. If, however, the above-identified application is again allowed, petitioner may request that it be applied towards the issue fee required by the new Notice of Allowance.[1]

The file does not indicate a change of address has been submitted, although the address given on the petition differs from the address of record. If appropriate, a change of address should be filed in accordance with MPEP 601.03. A courtesy copy of this decision is being mailed to the address given on the petition; however, the Office will mail all future correspondence solely to the address of record.

Telephone inquiries should be directed to Irvin Dingle at (571) 272-3210. This matter is being referred to Technology Center AU 2114 for processing of the request for continued examination under 37 CFR 1.114 and for consideration of the concurrently filed Information Disclosure Statement.

Irvin Dingle
Petitions Examiner
Office of Petitions

cc: Robert Plotkin, P.C.
35 Corporate Drvie, 4th floor
Burlington, MA 01803

---

[1] The request to apply the issue fee to the new Notice may be satisfied by completing and returning the new Issue Fee Transmittal Form PTOL-85(b), which includes the following language thereon: Commissioner for Patents is requested to apply the Issue Fee and Publication Fee (if any) or re-apply any previously paid issue fee to the application identified above. Petitioner is advised that, whether a fee is indicated as being due or not, the Issue Fee Transmittal Form **must** be completed and timely submitted to avoid abandonment. Note the language in bold text on the first page of the Notice of Allowance and Fee(s) Due (PTOL-85).

UNITED STATES PATENT AND TRADEMARK OFFICE

Commissioner for Patents
United States Patent and Trademark Office
P.O. Box 1450
Alexandria, VA 22313-1450
www.uspto.gov

ADVANCED MICRO DEVICES
C/O THE CAVANAGH LAW FIRM
VIAD CORPORATE CENTER
1850 NORTH CENTRAL AVENUE, SUITE 2400
PHOENIX, AZ 85004

COPY MAILED

APR 0 2 2008

OFFICE OF PETITIONS

In re Application of	:	
Seah Sun Too, et al.	:	
Application No. 10/818,981	:	DECISION ON PETITION
Filed: April 5, 2004	:	TO WITHDRAW
Attorney Docket No. H2081	:	FROM RECORD
	:	

This is a decision on the Request to Withdraw as attorney or agent of record under 37 C.F.R. § 1.36(b), filed June 13, 2007.

The request is **NOT APPROVED**.

A grantable request to withdraw as attorney/agent of record must be signed by every attorney/agent seeking to withdraw or contain a clear indication that one attorney is signing on behalf of another/others. A request to withdraw will not be approved unless at least 30 (thirty) days would remain between the date of approval and the later of the expiration date of a time to file a response or the expiration date of the maximum time period which can be extended under 37 C.F.R. § 1.136(a).

The request cannot be approved because the petitioner was not appointed by customer number.

All future communications from the Office will continue to be directed to the above-listed address until otherwise notified by applicant.

Telephone inquiries concerning this decision should be directed to undersigned at 571-272-1642.

April M. Wise
Petitions Examiner
Office of Petitions

cc: ADVANCED MICRO DEVICES, INC.
TECHNOLOGY LAW DEPT
5204 E. BEN WHITE BLVD
MAIL STOP 562
AUSTIN, TX 78741

UNITED STATES PATENT AND TRADEMARK OFFICE

UNITED STATES DEPARTMENT OF COMMERCE
United States Patent and Trademark Office
Address: COMMISSIONER FOR PATENTS
P.O. Box 1450
Alexandria, Virginia 22313-1450
www.uspto.gov

MHKKG/Oracle (Sun)
P.O. BOX 398
AUSTIN, TX 78767

Mail Date: 04/20/2010

Applicant	: Emrys J. Williams	: DECISION ON REQUEST FOR
Patent Number	: 7571468	: RECALCULATION of PATENT
Issue Date	: 08/04/2009	: TERM ADJUSTMENT IN VIEW
Appliction No	: 10/818,988	: OF WYETH AND NOTICE OF INTENT TO
Filed	: 04/06/2004	: ISSUE CERTIFICATE OF CORRECTION
		:

The Request for Recalculation is **GRANTED** to the extent indicated.

The patent term adjustment has been determined to be **861** days. The USPTO will *sua sponte* issue a certificate of correction reflecting the amount of PTA days determined by the recalculation.

Prior to the issuance of the certificate of correction, the USPTO will afford patentee an opportunity to be heard and request reconsideration. Accordingly, patentee has **one month or thirty (30) days**, whichever is longer, to file a request for reconsideration of this patent term adjustment calculation. See 35 U.S.C. 154(b)(3)(B)(ii) and 37 CFR 1.322(a)(4). No extensions of time will be granted under 37 CFR 1.136.

Patentee should use document code PET.OP if electronically filing a request for reconsideration of this patent term adjustment calculation. The patentee must also include the information required by 37 CFR 1.705(b)(2) and the fee required by 37 CFR 1.18(e). If patentee does not file a timely request for reconsideration of this patent term adjustment calculation including the information required by 37 CFR 1.705(b)(2) and the fee required by 37 CFR 1.18(e), the USPTO will issue a certificate of correction reflecting the PTA determination noted above.

Patentee should be aware that in order to preserve the right to review in the United States District Court for the District of Columbia of the USPTO patent term adjustment determination, patentee must ensure that he or she also take the steps required under 35 U.S.C. 154(b)(4)(A) in a timely manner. Nothing in the request for recalculation should be construed as providing an alternative time frame for commencing a civil action under 35 U.S.C. 154(b)(4)(A).

Any questions concerning this decision should be directed to the Office of Patent Legal Administration at 571-272-7702.

UNITED STATES PATENT AND TRADEMARK OFFICE

Commissioner for Patents
United States Patent and Trademark Office
P.O. Box 1450
Alexandria, VA 22313-1450
www.uspto.gov

HEWLETT PACKARD COMPANY
P.O. BOX 272400, 3404 E. HARMONY ROAD
INTELLECTUAL PROPERTY ADMINISTRATION
FORT COLLINS CO 80527-2400

COPY MAILED

JUN 12 2007

OFFICE OF PETITIONS

In re Application of :
Kevin David Safford et al :
Application No. 10/818,993 : ON PETITION
Filed: April 6, 2004 :
Attorney Docket No. 200309967-1 :

This is a decision on the petition, filed June 10, 2007, under 37 CFR 1.313(c)(2) to withdraw the above-identified application from issue after payment of the issue fee.

The petition is **GRANTED.**

The above-identified application is withdrawn from issue for consideration of a submission under 37 CFR 1.114 (request for continued examination). See 37 CFR 1.313(c)(2).

Petitioner is advised that the issue fee paid on May 23, 2007 in the above-identified application cannot be refunded. If, however, the above-identified application is again allowed, petitioner may request that it be applied towards the issue fee required by the new Notice of Allowance.[1]

The instant petition under 37 CFR 1.313(c)(2), the RCE and the IDS, filed on June 6, 2007, are not signed by an attorney of record. However, in accordance with 37 CFR 1.34(a), the signature of Mr. Plotkin appearing on the correspondence shall constitute a representation to the United States Patent and Trademark Office that he is authorized to represent the particular party in whose behalf he act. However, if Mr. Plotkin desires to receive correspondence regarding this file, the appropriate power of attorney documentation must be submitted. A courtesy copy of this decision is being mailed to Mr. Plotkin, the petitioner herein. Until otherwise instructed, all future correspondence regarding this application file will be directed solely to the above-noted correspondence address of record.

Telephone inquiries should be directed to the undersigned at (571) 272-3208.

---

[1] The request to apply the issue fee to the new Notice may be satisfied by completing and returning the new Issue Fee Transmittal Form PTOL-85(b), which includes the following language thereon: "Commissioner for Patents is requested to apply the Issue Fee and Publication Fee (if any) or re-apply any previously paid issue fee to the application identified above." Petitioner is advised that, whether a fee is indicated as being due or not, the Issue Fee Transmittal Form **must** be completed and timely submitted to avoid abandonment. Note the language in bold text on the first page of the Notice of Allowance and Fee(s) Due (PTOL-85).

The file will be referred to Technology Center Art Unit 2114 for processing of the request for continued examination under 37 CFR 1.114 filed June 10, 2007.

Karen Creasy

Karen Creasy
Petitions Examiner
Office of Petitions

cc:
ROBERT PLOTKIN, P.C.
35 CORPORATE DRIVE, 4TH FLOOR
BURLINGTON, MA 01803

UNITED STATES PATENT AND TRADEMARK OFFICE

Commissioner for Patents
United States Patent and Trademark Office
P.O. Box 1450
Alexandria, VA 22313-1450
www.uspto.gov

MARGER JOHNSON & MCCOLLOM, P.C.
210 SW MORRISON STREET, SUITE 400
PORTLAND OR 97204

COPY MAILED

DEC 17 2007

OFFICE OF PETITIONS

In re Application of :
URQUIZO et al. :
Application No. 10/819,038 : DECISION ON PETITION
Filed: 04/05/2004 :
Attorney Docket No. 2705-270 :

This is a decision on the PETITION TO WITHDRAW HOLDING OF ABANDONMENT UNDER 37 C.F.R. § 1.181 (a)," filed October 23, 2007.

The petition is **GRANTED**.

This application was held abandoned for failure to reply to the final Office Action mailed March 21, 2007, which set a three (3) month shortened statutory period for reply. A Notice of Abandonment was mailed on October 5, 2007.

Applicants request that the Office withdraw the holding of abandonment because they did not receive the Office Action, which was returned as undeliverable by the U.S. Postal Service on March 22, 2007. Applicants assert that the address listed on the face of the Office Action is correct, and mail was deliverable at the listed address at the time of delivery.

A review of the record reveals that the USPTO mailed the final Office Action to the correct correspondence address. However, the USPS inexplicably returned the Office Action to the USPTO. For this reason, the applicants did not receive the final Office Action of March 21, 2007. Accordingly, the petition to withdraw the holding of abandonment is **granted**. The Notice of Abandonment was mailed in error and is hereby withdrawn. The application is restored to pending status.

This application is being referred to the Technology Center technical support staff of Art Unit 2616 to re-mail the final Office Action of March 21, 2007. The three month shortened statutory period for responding to the final Office Action will be restarted to run from the date of the re-mailing of the final Office action.

Telephone inquiries concerning this decision may be directed to the undersigned at (571) 272-3211. Any other questions regarding the status of the application or the examination process should be directed to the Technology Center.

Christina Tartera Donnell

Christina Tartera Donnell
Senior Petitions Attorney
Office of Petitions

UNITED STATES PATENT AND TRADEMARK OFFICE

COMMISSIONER FOR PATENTS
UNITED STATES PATENT AND TRADEMARK OFFICE
P.O. BOX 1450
ALEXANDRIA, VA 22313-1450
www.uspto.gov

COPY MAILED

AUG 3 1 2009

OFFICE OF PETITIONS

AMGEN INC.
LAW DEPARTMENT
1201 AMGEN COURT WEST
SEATTLE WA 98119

In re Patent No. 7,446,181	:
Issued: November 4, 2008	:
Application No. 10/819,054	: PATENT TERM ADJUSTMENT
Filed: April 6, 2004	:
Dkt. No.: A-992-US-DIV5	:

This is a decision on the APPLICATION FOR PATENT TERM ADJUSTMENT 37 C.F.R. § 1.705(d)," filed December 23, 2008.

The request for reconsideration of patent term adjustment (PTA) is **DISMISSED**.

The above-identified application matured into U.S. Pat. No. 7,446,181 on November 4, 2008. The patent issued with a PTA 396 days. The request for reconsideration of patent term adjustment was timely filed within two months of the issue date of the patent. See, 37 CFR 1.705(d). Patentees request that the adjustment be increased from 396 days to 951 days.

Patentees request recalculation of the patent term adjustment based on the decision in Wyeth v. Dudas, 580 F. Supp. 2d 138, 88 U.S.P.Q. 2d 1538 (D.D.C. 2008). Patentees' calculation of adjustment asserts that the following adjustments do not overlap: a three year delay by the Office, pursuant to 37 CFR 1.703(b), of 578 days and the period of adjustment due to examination delay, pursuant to 37 CFR 1.702(a), of 555 days. The 578-day period is calculated based on the application having been filed under 35 U.S.C. 111(a) on April 6, 2004, and the patent having been issued on November 4, 2008. Patentees assert that in addition to this 578-day period, they are entitled to a period of adjustment due to examination delay pursuant to 37 CFR 1.702(a) of 555 days.

Under 37 CFR 1.703(f), patentees are entitled to a period of patent term adjustment equal to the period of delays based on the grounds set forth in 37 CFR 1.702 reduced by the period of time equal to the period of time during which patentees failed to engage in reasonable efforts to conclude prosecution pursuant to 37 CFR 1.704. In other words, patentees are entitled to the period of Office delay reduced by the period of applicant delay.

Patentees do not dispute that the total period of Office delay is the sum of the period of three years delay and the period of examination delay, to the extent that these periods of delay are not overlapping. However, in effect, patentees contend that no portion of the three year delay period

overlaps with the period of examination delay. Accordingly, patentees submit that the total period of adjustment for Office delay is 1,133 days (deemed by applicants to be the sum of the period of three year delay (578 days) and the period of examination delay (555 days), reduced by zero days of overlap). As such, patentees assert entitlement to a patent term adjustment of 951 days (578 days *plus* 555 days *less* zero days of overlap *less* 182 days of applicant delay).

The Office agrees that as of the time that at the time of issuance of the patent, the application was pending three years and 578 days after its filing date. The three years delay commences the day after the date that is three years after the date that an application is filed, and ends the date that the patent issues, notwithstanding any periods of time excluded pursuant to U.S.C. 154(b)(1)(B)(i)-(iii). The Office agrees that certain action was not taken within a specified time frame, and, thus, the entry of a period of adjustment of 555 days is correct. At issue is whether patentees should accrue an additional 578 days of patent term adjustment for the Office taking in excess of three years to issue the patent as well as 555 days for Office failure to take a certain action within a specified time frame (or examination delay).

The Office contends that the period of 578 days of delay in issuing the patent overlaps with the period of examination delay of 555 days. Patentees' calculation of the period of overlap is inconsistent with the Office's interpretation of this provision. 35 U.S.C. 154(b)(2)(A) limits the adjustment of patent term, as follows:

> to the extent that the periods of delay attributable to grounds specified in paragraph (1) overlap, the period of any adjustment granted under this subsection shall not exceed the actual number of days the issuance of the patent was delayed.

Likewise, 35 CFR 1.703(f) provides that:

> To the extent that periods of delay attributable to the grounds specified in § 1.702 overlap, the period of adjustment granted under this section shall not exceed the actual number of days the issuance of the patent was delayed.

As explained in Explanation of 37 CFR 1.703(f) and of the United States Patent and Trademark Office Interpretation of 35 U.S.C. 154(b)(2)(A), 69 Fed. Reg. 34283 (June 21, 2004), the Office interprets 35 U.S.C. 154(b)(2)(A) as permitting either patent term adjustment under 35 U.S.C. 154(b)(1)(A)(i)-(iv), or patent term adjustment under 35 U.S.C. 154(b)(1)(B), but not as permitting patent term adjustment under both 35 U.S.C. 154(b)(1)(A)(i)-(iv) and 154(b)(1)(B). Accordingly, the Office implements the overlap provision as follows:

> If an application is entitled to an adjustment under 35 U.S.C. 154(b)(1)(B), the entire period during which the application was pending (except for periods excluded under 35 U.S.C. 154(b)(1)(B)(i)-(iii)), and not just the period beginning three years after the actual filing date of the application, is the period of delay under 35 U.S.C. 154(b)(1)(B) in determining whether periods of delay overlap under 35 U.S.C. 154(b)(2)(A). Thus, any days of delay for Office issuance of the patent more than 3 years after the filing date of the application, which overlap with the days of patent term adjustment accorded prior to

> the issuance of the patent will not result in any additional patent term adjustment. See 35 U.S.C. 154(b)(1)(B), 35 U.S.C. 154(b)(2)(A), and 37 CFR § 1.703(f). *See Changes to Implement Patent Term Adjustment Under Twenty Year Term; Final Rule*, 65 Fed. Reg. 56366 (Sept. 18, 2000). See, also, Revision of Patent Term Extension and Patent Term Adjustment Provisions; Final Rule, 69 Fed. Reg. 21704 (April 22, 2004), 1282 Off. Gaz. Pat. Office 100 (May 18, 2004). See, also, Explanation of 37 CFR 1.703(f) and of the United States Patent and Trademark Office Interpretation of 35 U.S.C. 154(b)(2)(A), 69 Fed. Reg. 34283 (June 21, 2004).

The current wording of § 1.703(f) was revised in response to the misinterpretation of this provision by a number of Patentees. The rule was slightly revised to more closely track the corresponding language of 35 U.S.C. 154(b)(2)(A). The relevant portion differs only to the extent that the statute refers back to provisions of the statute whereas the rule refers back to sections of the rule. This was not a substantive change to the rule nor did it reflect a change of the Office's interpretation of 35 U.S.C. 154(b)(2)(A). As stated in the Explanation of 37 CFR 1.703(f) and of the United States Patent and Trademark Office Interpretation of 35 U.S.C. 154(b)(2)(A), the Office has consistently taken the position that if an application is entitled to an adjustment under the three-year pendency provision of 35 U.S.C. 154(b)(1)(B), the entire period during which the application was pending before the Office (except for periods excluded under 35 U.S.C. 154(b)(1)(B)(i)-(iii)), and not just the period beginning three years after the actual filing date of the application, is the relevant period under 35 U.S.C. 154(b)(1)(B) in determining whether periods of delay "overlap" under 35 U.S.C. 154(b)(2)(A).

This interpretation is consistent with the statute. Taken together the statute and rule provide that to the extent that periods of delay attributable to grounds specified in 35 U.S.C. 154(b)(1) and in corresponding § 1.702 overlap, the period of adjustment granted shall not exceed the actual number of days the issuance of the patent was delayed. The grounds specified in these sections cover the A) guarantee of prompt Patent and Trademark Office responses, B) guarantee of no more than 3-year application pendency, and C) guarantee or adjustments for delays due to interference, secrecy orders and appeals. A section by section analysis of 35 U.S.C. 154(b)(2)(A) specifically provides that:

> Section 4402 imposes limitations on restoration of term. In general, pursuant to [35 U.S.C.] 154(b)(2)(A)-(C), total adjustments granted for restorations under [35 U.S.C. 154](b)(1) are reduced as follows: (1) To the extent that there are multiple grounds for extending the term of a patent that may exist simultaneously (e.g., delay due to a secrecy order under [35 U.S.C.] 181 and administrative delay under [35 U.S.C.] 154(b)(1)(A)), the term should not be extended for each ground of delay but only for the actual number of days that the issuance of a patent was delayed; See, 145 Cong. Rec. S14,718[1].

---

[1] The AIPA is title IV of the Intellectual Property and Communications Omnibus Reform Act of 1999 (S. 1948), which was incorporated and enacted as law as part of Pub. L. 106-113. The Conference Report for H.R. 3194, 106th Cong. 1st Sess. (1999), which resulted in Pub. L. 106-113, does not contain any discussion (other than the incorporated language) of S. 1948. A section-by-section analysis of S. 1948, however, was printed in the Congressional Record at the request of Senator Lott, See 145 Cong. Rec. S14,708-26 (1999)(daily ed. Nov. 17, 1999).

As such, the period for over three-year pendency does not overlap only to the extent that the actual dates in the period beginning three years after the date on which the application was filed overlap with the actual dates in the periods for failure of the Office to take action within specified time frames. In other words, consideration of the overlap does not begin three years after the filing date of the application.

In this instance, the relevant period under 35 U.S.C. 154(b)(1)(B) in determining whether periods of delay "overlap" under 35 U.S.C. 154(b)(1)(A) is the entire period during which the application was pending before the Office, April 6, 2004, to the date the patent issued on November 4, 2008. Prior to the issuance of the patent, 555 days of patent term adjustment were accorded for the Office failing to respond within a specified time frame during the pendency of the application. The 578 days for Office delay in issuing the patent overlap with the 555 days of Office delay. During that time, the issuance of the patent was delayed by 578 days. The Office did not delay 578 days and then delay an additional 555 days. Accordingly, as the 578 days attributable to the delay in the issuance of the patent overlaps with the adjustment of 555 days attributable to grounds specified in § 1.702(a), entry of both periods is not warranted and only the actual number of delays of delay, 578, were entered.

In view thereof, no adjustment to the patent term will be made.

The Office acknowledges submission of the required application fee of $200.00. The fee will not be refunded, as requested, as submission of the patent term adjustment application fee is required per 37 CFR 1.18(e).

Telephone inquiries specific to this matter should be directed to the undersigned at (571) 272-3205.

Alesia M. Brown
Petitions Attorney
Office of Petitions

UNITED STATES PATENT AND TRADEMARK OFFICE

Commissioner for Patents
United States Patent and Trademark Office
P.O. Box 1450
Alexandria, VA 22313-1450
www.uspto.gov

ANTHONY EDW. J CAMPBELL
PO BOX 160370
AUSTIN, TX 78716

COPY MAILED

NOV 3 0 2005

OFFICE OF PETITIONS

In re Application of	:	
Jack Dare	:	
Application No. 10/819,074	:	ON PETITION
Filed: April 6, 2004	:	
Attorney Docket No. CTI335	:	

This is a decision on the petition under 37 CFR 1.137(b), filed October 24, 2005, to revive the above-identified application.

The petition is **GRANTED**.

The above-identified application became abandoned for failure to submit the issue fee in a timely manner in reply to the Notice of Allowance mailed April 25, 2005, which set a statutory period for reply of three (3) months. Accordingly, the above-identified application became abandoned on July 26, 2005.

The petition satisfies the conditions for revival pursuant to the provisions of 37 CFR 1.137(b) in that (1) the reply in the form of the issue fee; (2) the petition fee; and (3) the required statement of unintentional delay have been received. Accordingly, the issue/publication fees are accepted as having been unintentional delayed.

Telephone inquiries concerning this decision should be directed to Wan Laymon at (571) 272-3220.

This matter is being referred to Publishing Division.

Wan Laymon
Petitions Examiner
Office of Petitions

UNITED STATES PATENT AND TRADEMARK OFFICE

UNITED STATES DEPARTMENT OF COMMERCE
United States Patent and Trademark Office
Address: COMMISSIONER FOR PATENTS
P.O. Box 1450
Alexandria, Virginia 22313-1450
www.uspto.gov

APPL NO.	FILING OR 371 (c) DATE	ART UNIT	FIL FEE REC'D	ATTY.DOCKET NO	DRAWINGS	TOT CLMS	IND CLMS
10/819,082	04/05/2004	2171	920	017887-010910US	7	14	2

CONFIRMATION NO. 4566

UPDATED FILING RECEIPT

OC000000015140130

20350
TOWNSEND AND TOWNSEND AND CREW, LLP
TWO EMBARCADERO CENTER
EIGHTH FLOOR
SAN FRANCISCO, CA 94111-3834

Date Mailed: 02/09/2005

Receipt is acknowledged of this regular Patent Application. It will be considered in its order and you will be notified as to the results of the examination. Be sure to provide the U.S. APPLICATION NUMBER, FILING DATE, NAME OF APPLICANT, and TITLE OF INVENTION when inquiring about this application. Fees transmitted by check or draft are subject to collection. Please verify the accuracy of the data presented on this receipt. **If an error is noted on this Filing Receipt, please write to the Office of Initial Patent Examination's Filing Receipt Corrections, facsimile number 703-746-9195. Please provide a copy of this Filing Receipt with the changes noted thereon. If you received a "Notice to File Missing Parts" for this application, please submit any corrections to this Filing Receipt with your reply to the Notice. When the USPTO processes the reply to the Notice, the USPTO will generate another Filing Receipt incorporating the requested corrections (if appropriate).**

Applicant(s)

Ali Diab, Atherton, CA;
Scott A. Gatz, San Francisco, CA;
Shyam Kapur, Sunnyvale, CA;
David Ku, Fremont, CA;
Chuck Kung, Los Altos, CA;
Phu Hoang, San Francisco, CA;
Qi Lu, San Jose, CA;
Lynne Pogue, Menlo Park, CA;
Yuan Kui Shen, Cupertino, CA;
Norman Shi, Fremont, CA;
Thai Tran, Redwood City, CA;
Eckart Walther, Palo Alto, CA;
Jeff Weiner, Palo Alto, CA;

Assignment For Published Patent Application

Yahoo! Inc., Sunnyvale, CA

Power of Attorney: None

Domestic Priority data as claimed by applicant

Foreign Applications

If Required, Foreign Filing License Granted: 06/21/2004

The country code and number of your priority application, to be used for filing abroad under the Paris Convention, is US10/819,082

Projected Publication Date: 10/06/2005

Non-Publication Request: No

Early Publication Request: No

Title

Search system using search subdomain and hints to subdomains in search query statements and sponsored results on a subdomain-by-subdomain basis

Preliminary Class

707

LICENSE FOR FOREIGN FILING UNDER
Title 35, United States Code, Section 184
Title 37, Code of Federal Regulations, 5.11 & 5.15

GRANTED

The applicant has been granted a license under 35 U.S.C. 184, if the phrase "IF REQUIRED, FOREIGN FILING LICENSE GRANTED" followed by a date appears on this form. Such licenses are issued in all applications where the conditions for issuance of a license have been met, regardless of whether or not a license may be required as set forth in 37 CFR 5.15. The scope and limitations of this license are set forth in 37 CFR 5.15(a) unless an earlier license has been issued under 37 CFR 5.15(b). The license is subject to revocation upon written notification. The date indicated is the effective date of the license, unless an earlier license of similar scope has been granted under 37 CFR 5.13 or 5.14.

This license is to be retained by the licensee and may be used at any time on or after the effective date thereof unless it is revoked. This license is automatically transferred to any related applications(s) filed under 37 CFR 1.53(d). This license is not retroactive.

The grant of a license does not in any way lessen the responsibility of a licensee for the security of the subject matter as imposed by any Government contract or the provisions of existing laws relating to espionage and the national security or the export of technical data. Licensees should apprise themselves of current regulations especially with respect to certain countries, of other agencies, particularly the Office of Defense Trade Controls, Department of State (with respect to Arms, Munitions and Implements of War (22 CFR 121-128)); the Office of Export Administration, Department of Commerce (15 CFR 370.10 (j)); the Office of Foreign Assets Control, Department of Treasury (31 CFR Parts 500+) and the Department of Energy.

NOT GRANTED

No license under 35 U.S.C. 184 has been granted at this time, if the phrase "IF REQUIRED, FOREIGN FILING LICENSE GRANTED" DOES NOT appear on this form. Applicant may still petition for a license under 37 CFR 5.12, if a license is desired before the expiration of 6 months from the filing date of the application. If 6 months has lapsed from the filing date of this application and the licensee has not received any indication of a secrecy order under 35 U.S.C. 181, the licensee may foreign file the application pursuant to 37 CFR 5.15(b).

UNITED STATES PATENT AND TRADEMARK OFFICE

Commissioner for Patents
United States Patent and Trademark Office
P.O. Box 1450
Alexandria, VA 22313-1450
www.uspto.gov

TOWNSEND AND TOWNSEND AND CREW, LLP
TWO EMBARCADERO CENTER
EIGHTH FLOOR
SAN FRANCISCO CA 94111-3834

COPY MAILED

OCT 30 2007

OFFICE OF PETITIONS

In re Application of
Lincoln McBride, et. al.
Application No. 10/819,088
Filed: April 5, 2004
Attorney Docket No. 020174-010810US

DECISION DISMISSING PETITIONS
UNDER 37 CFR 1.78(a)(3) AND (a)(6)

This is a decision on the petition under 37 CFR §§ 1.78(a)(3) and 1.78(a)(6), filed August 3, 2006, to accept an unintentionally delayed claim under 35 U.S.C. §§ 120 and 119(e) for the benefit of priority to the prior-filed nonprovisional and provisional applications set forth in the concurrently filed amendment. The delay in responding is regretted.

The petition is **DISMISSED**

A petition for acceptance of a claim for late priority under 37 CFR §§ 1.78(a)(3) and 1.78(a)(6) is only applicable to those applications filed on or after November 29, 2000 and after the expiration of the period specified in 37 CFR §§ 1.78(a)(2)(ii) and 1.78(a)(5)(ii). In addition, the petition under 37 CFR §§ 1.78(a)(3) and 1.78(a)(6) must be accompanied by:

(1) the reference required by 35 U.S.C. §§ 120 and 119(e) and 37 CFR §§ 1.78(a)(2)(i) and 1.78(a)(5)(i) of the prior-filed application, unless previously submitted;
(2) the surcharge set forth in § 1.17(t); and
(3) a statement that the entire delay between the date the claim was due under 37 CFR §§ 1.78(a)(2)(ii) and 1.78(a)(5)(ii) and the date the claim was filed was unintentional. The Director may require additional information where there is a question whether the delay was unintentional.

The petition does not comply with item (1).

37 CFR 1.78(a)(2)(i) requires that any nonprovisional application claiming the benefit of one or more prior-filed copending nonprovisional applications must contain or be amended to contain a reference to each such prior-filed application, identifying it by application number (consisting of the series code and serial number) and indicating the relationship of the applications. The relationship between the applications is whether the subject application is a continuation, divisional, or continuation-in-part of a prior-filed nonprovisional application. An example of a proper benefit claim is: "This application is a continuation of Application No. 10/---, filed---." A benefit claim that merely states: "This application

claims the benefit of Application No. 10/---, filed---," does not comply with 37 CFR 1.78(a)(2)(i) since the proper relationship, which includes the type of continuing application, is not stated. Also, the status of each nonprovisional parent application (if it is patented or abandoned) should also be indicated, following the filing date of the parent nonprovisional application. *See* MPEP Section 201.11, Reference to Prior Nonprovisional Applications. The amendment fails to comply with the provisions of 37 CFR 1.78(a)(2)(i) and is therefore unacceptable.

Before the petition under 37 CFR §§ 1.78(a)(3) and 1.78(a)(6) can be granted, a renewed petition and either an Application Data Sheet or amendment (complying with the provisions of 37 CFR 1.121 and 37 CFR 1.76(b)(5)) to correct the above matters are required.

Further correspondence with respect to this matter should be addressed as follows:

By mail: Mail Stop PETITIONS
Commissioner for Patents
Post Office Box 1450
Alexandria, VA 22313-1450

By hand: Customer Service Window
Mail Stop Petitions
Randolph Building
401 Dulany Street
Alexandria, VA 22314

By fax: (571) 273-8300
ATTN: Office of Petitions

Any questions concerning this matter may be directed to Andrea Smith at (571) 272-3226.

Frances Hicks
Petitions Examiner
Office of Petitions

UNITED STATES PATENT AND TRADEMARK OFFICE

Commissioner for Patents
United States Patent and Trademark Office
P.O. Box 1450
Alexandria, VA 22313-1450
www.uspto.gov

TOWNSEND AND TOWNSEND AND CREW, LLP
TWO EMBARCADERO CENTER
EIGHTH FLOOR
SAN FRANCISCO, CA 94111-3834

COPY MAILED

APR 16 2008

In re Application of	:	
Lincoln McBride, et. al.	:	
Application No. 10/819,088	:	DECISION DISMISSING PETITIONS
Filed: April 5, 2004	:	UNDER 37 CFR 1.78(a)(3) AND (a)(6)
Attorney Docket No. 020174-010810US	:	

This is a decision on the renewed petition under 37 CFR §§ 1.78(a)(3) and 1.78(a)(6), filed March 25, 2008, to accept an unintentionally delayed claim under 35 U.S.C. §§ 120 and 119(e) for the benefit of priority to the prior-filed nonprovisional and provisional applications set forth in the concurrently filed Application Data Sheet (ADS).

The petitions are **GRANTED.**

A petition for acceptance of a claim for late priority under 37 CFR §§ 1.78(a)(3) and 1.78(a)(6) is only applicable to those applications filed on or after November 29, 2000. Further, the petition is appropriate only after the expiration of the period specified in 37 CFR §§ 1.78(a)(2)(ii) and 1.78(a)(5)(ii). In addition, the petition under 37 CFR §§ 1.78(a)(3) and 1.78(a)(6) must be accompanied by:

(1) the reference required by 35 U.S.C. §§ 120 and 119(e) and 37 CFR §§ 1.78(a)(2)(i) and 1.78(a)(5)(i) of the prior-filed application, unless previously submitted;

(2) the surcharge set forth in § 1.17(t); and

(3) a statement that the entire delay between the date the claim was due under 37 CFR §§ 1.78(a)(2)(ii) and 1.78(a)(5)(ii) and the date the claim was filed was unintentional. The Director may require additional information where there is a question whether the delay was unintentional.

Additionally, the instant nonprovisional application must be pending at the time of filing of the reference to the prior-filed provisional application as required by 37 CFR 1.78(a)(5)(ii). Further,

the nonprovisional application claiming the benefit of the prior-filed provisional application must have been filed within twelve months of the filing date of the prior-filed provisional application.

All the above requirements having been satisfied, the late claim for benefit of priority under 35 U.S.C. §§ 120 and 119(e) is accepted as being unintentionally delayed.

The granting of the petition to accept the delayed benefit claim to the prior-filed applications under 37 CFR §§ 1.78(a)(3) and 1.78(a)(6) should not be construed as meaning that this application is entitled to the benefit of the filing date of the prior-filed applications. In order for this application to be entitled to the benefit of the prior-filed applications, all other requirements under 35 U.S.C. §§120 and 1.78(a)(1) and (a)(2) and under 35 U.S.C. §119(e) and 37 CFR 1.78(a)(4) and (a)(5) must be met. Similarly, the fact that the corrected Filing Receipt accompanying this decision on petition includes the prior-filed applications should not be construed as meaning that applicant is entitled to the claim for benefit of priority to the prior-filed applications noted thereon. Accordingly, the examiner will, in due course, consider this benefit claim and determine whether the application is entitled to the benefit of the earlier filing date.

A corrected Filing Receipt, which includes the priority claim to the prior-filed applications, accompanies this decision on petition.

This application is being forwarded to Technology Center Art Unit 1797, for consideration by the examiner of the claim under 35 U.S.C. § §120 and 119(e) of the prior-filed nonprovisional and provisional applications.

Any questions concerning this matter may be directed to the undersigned at (571) 272-3226. All other inquiries concerning either the examination procedures or status of the application should be directed to the Technology Center.

Andrea Smith
Petitions Examiner
Office of Petitions

ATTACHMENT: Corrected Filing Receipt

UNITED STATES PATENT AND TRADEMARK OFFICE

UNITED STATES DEPARTMENT OF COMMERCE
United States Patent and Trademark Office
Address: COMMISSIONER FOR PATENTS
P.O. Box 1450
Alexandria, Virginia 22313-1450
www.uspto.gov

APPLICATION NUMBER	FILING or 371(c) DATE	GRP ART UNIT	FIL FEE REC'D	ATTY.DOCKET.NO	TOT CLAIMS	IND CLAIMS
10/819,088	04/05/2004	1797	920	020174-010810US	13	2

CONFIRMATION NO. 4555

CORRECTED FILING RECEIPT

20350
TOWNSEND AND TOWNSEND AND CREW, LLP
TWO EMBARCADERO CENTER
EIGHTH FLOOR
SAN FRANCISCO, CA 94111-3834

OC000000029419485

Date Mailed: 04/16/2008

Receipt is acknowledged of this non-provisional patent application. The application will be taken up for examination in due course. Applicant will be notified as to the results of the examination. Any correspondence concerning the application must include the following identification information: the U.S. APPLICATION NUMBER, FILING DATE, NAME OF APPLICANT, and TITLE OF INVENTION. Fees transmitted by check or draft are subject to collection. Please verify the accuracy of the data presented on this receipt. **If an error is noted on this Filing Receipt, please write to the Office of Initial Patent Examination's Filing Receipt Corrections. Please provide a copy of this Filing Receipt with the changes noted thereon. If you received a "Notice to File Missing Parts" for this application, please submit any corrections to this Filing Receipt with your reply to the Notice. When the USPTO processes the reply to the Notice, the USPTO will generate another Filing Receipt incorporating the requested corrections**

Applicant(s)

Lincoln McBride, Belmont, CA;
Michael Lucero, South San Francisco, CA;
Marc Unger, San Mateo, CA;
Hany Ramez Nassef, San Mateo, CA;
Geoffrey Facer, San Francisco, CA;

Assignment For Published Patent Application

Fluidigm Corporation, South San Francisco, CA

Power of Attorney: The patent practitioners associated with Customer Number 20350

Domestic Priority data as claimed by applicant

This appln claims benefit of 60/460,634 04/03/2003
and is a CIP of 10/306,798 11/27/2002 PAT 7,118,910
which claims benefit of 60/391,529 06/24/2002
and claims benefit of 60/335,292 11/30/2001

Foreign Applications

If Required, Foreign Filing License Granted: 07/12/2004

The country code and number of your priority application, to be used for filing abroad under the Paris Convention, is **US 10/819,088**

Projected Publication Date: Not Applicable

Non-Publication Request: No

Early Publication Request: No

** SMALL ENTITY **

Title

Microfluidic device and methods of using same

Preliminary Class

422

PROTECTING YOUR INVENTION OUTSIDE THE UNITED STATES

Since the rights granted by a U.S. patent extend only throughout the territory of the United States and have no effect in a foreign country, an inventor who wishes patent protection in another country must apply for a patent in a specific country or in regional patent offices. Applicants may wish to consider the filing of an international application under the Patent Cooperation Treaty (PCT). An international (PCT) application generally has the same effect as a regular national patent application in each PCT-member country. The PCT process **simplifies** the filing of patent applications on the same invention in member countries, but **does not result** in a grant of "an international patent" and does not eliminate the need of applicants to file additional documents and fees in countries where patent protection is desired.

Almost every country has its own patent law, and a person desiring a patent in a particular country must make an application for patent in that country in accordance with its particular laws. Since the laws of many countries differ in various respects from the patent law of the United States, applicants are advised to seek guidance from specific foreign countries to ensure that patent rights are not lost prematurely.

Applicants also are advised that in the case of inventions made in the United States, the Director of the USPTO must issue a license before applicants can apply for a patent in a foreign country. The filing of a U.S. patent application serves as a request for a foreign filing license. The application's filing receipt contains further information and guidance as to the status of applicant's license for foreign filing.

Applicants may wish to consult the USPTO booklet, "General Information Concerning Patents" (specifically, the section entitled "Treaties and Foreign Patents") for more information on timeframes and deadlines for filing foreign patent applications. The guide is available either by contacting the USPTO Contact Center at 800-786-9199, or it can be viewed on the USPTO website at http://www.uspto.gov/web/offices/pac/doc/general/index.html.

For information on preventing theft of your intellectual property (patents, trademarks and copyrights), you may wish to consult the U.S. Government website, http://www.stopfakes.gov. Part of a Department of Commerce initiative, this website includes self-help "toolkits" giving innovators guidance on how to protect intellectual property in specific countries such as China, Korea and Mexico. For questions regarding patent enforcement issues, applicants may call the U.S. Government hotline at 1-866-999-HALT (1-866-999-4158).

LICENSE FOR FOREIGN FILING UNDER

Title 35, United States Code, Section 184

Title 37, Code of Federal Regulations, 5.11 & 5.15

GRANTED

The applicant has been granted a license under 35 U.S.C. 184, if the phrase "IF REQUIRED, FOREIGN FILING LICENSE GRANTED" followed by a date appears on this form. Such licenses are issued in all applications where

the conditions for issuance of a license have been met, regardless of whether or not a license may be required as set forth in 37 CFR 5.15. The scope and limitations of this license are set forth in 37 CFR 5.15(a) unless an earlier license has been issued under 37 CFR 5.15(b). The license is subject to revocation upon written notification. The date indicated is the effective date of the license, unless an earlier license of similar scope has been granted under 37 CFR 5.13 or 5.14.

This license is to be retained by the licensee and may be used at any time on or after the effective date thereof unless it is revoked. This license is automatically transferred to any related applications(s) filed under 37 CFR 1.53(d). This license is not retroactive.

The grant of a license does not in any way lessen the responsibility of a licensee for the security of the subject matter as imposed by any Government contract or the provisions of existing laws relating to espionage and the national security or the export of technical data. Licensees should apprise themselves of current regulations especially with respect to certain countries, of other agencies, particularly the Office of Defense Trade Controls, Department of State (with respect to Arms, Munitions and Implements of War (22 CFR 121-128)); the Bureau of Industry and Security, Department of Commerce (15 CFR parts 730-774); the Office of Foreign AssetsControl, Department of Treasury (31 CFR Parts 500+) and the Department of Energy.

NOT GRANTED

No license under 35 U.S.C. 184 has been granted at this time, if the phrase "IF REQUIRED, FOREIGN FILING LICENSE GRANTED" DOES NOT appear on this form. Applicant may still petition for a license under 37 CFR 5.12, if a license is desired before the expiration of 6 months from the filing date of the application. If 6 months has lapsed from the filing date of this application and the licensee has not received any indication of a secrecy order under 35 U.S.C. 181, the licensee may foreign file the application pursuant to 37 CFR 5.15(b).

UNITED STATES PATENT AND TRADEMARK OFFICE

Commissioner for Patents
United States Patent and Trademark Office
P.O. Box 1450
Alexandria, VA 22313-1450
www.uspto.gov

TOWNSEND AND TOWNSEND AND CREW, LLP
TWO EMBARCADERO CENTER
EIGHTH FLOOR
SAN FRANCISCO CA 94111-3834

COPY MAILED

OCT 29 2008

OFFICE OF PETITIONS

In re Application of:	:	
MCBRIDE, et al.	:	
Application No.: 10/819,088	:	NOTICE
Filed: April 5, 2004	:	
Attorney Docket No.: 020174-010810US	:	

This is a notice regarding your request for acceptance of a fee deficiency submission under 37 CFR 1.28, filed January 6, 2006.

The Office no longer investigates or rejects original or reissue patent under 37 CFR 1.56. **1098 Off. Gaz. Pat. Office 502 (January 3, 1989)**. Therefore, nothing in this Notice is intended to imply that an investigation was done.

Your fee deficiency submission under 37 CFR 1.28 is hereby **ACCEPTED**.

This patent is no longer entitled to small entity status. Accordingly, all future fees paid in this patent must be paid at the large entity rate.

Telephone inquiries concerning this decision should be directed to Brian W. Brown at (571) 272-5338.

Brian W. Brown
Petitions Examiner
Office of Petitions

UNITED STATES PATENT AND TRADEMARK OFFICE

Commissioner for Patents
United States Patent and Trademark Office
P.O. Box 1450
Alexandria, VA 22313-1450
www.uspto.gov

TOWNSEND AND TOWNSEND AND CREW, LLP
TWO EMBARCADERO CENTER
EIGHTH FLOOR
SAN FRANCISCO, CA 94111-3834

COPY MAILED
DEC 1 1 2008

In re Application of	:	
Lincoln McBride, et al.	:	
Application No.: 10/819,088	:	ON PETITION
Filed: April 5, 2004	:	
Attorney Docket No.: 020174-010810US	:	

This is a decision on the petition, filed December 10, 2008, under 37 CFR 1.313(c)(2) to withdraw the above-identified application from issue after payment of the issue fee.

The petition is **GRANTED**.

The above-identified application is withdrawn from issue for consideration of a submission under 37 CFR 1.114 (request for continued examination). See 37 CFR 1.313(c)(2).

Petitioner is advised that the issue fee paid on October 27, 2008, cannot be refunded. If, however, this application is again allowed, petitioner may request that it be applied towards the issue fee required by the new Notice of Allowance.[1]

Telephone inquiries relating to this decision should be directed to the undersigned at (571) 272-3204.

The application is being referred to Technology Center AU 1797 for further processing of the request for continued examination under 37 CFR 1.114 and for consideration of the concurrently filed Information Disclosure Statement (IDS).

/SDB/

Sherry D. Brinkley
Petitions Examiner
Office of Petitions

[1] *The request to apply the issue fee to the new Notice may be satisfied by completing and returning the new Part B - Fee(s) Transmittal Form (along with any balance due at the time of submission). Petitioner is advised that the Issue Fee Transmittal Form must be completed and timely submitted to avoid abandonment of the application.*

UNITED STATES PATENT AND TRADEMARK OFFICE

Commissioner for Patents
United States Patent and Trademark Office
P.O. Box 1450
Alexandria, VA 22313-1450
www.uspto.gov

TOWNSEND AND TOWNSEND AND CREW, LLP
TWO EMBARCADERO CENTER
EIGHTH FLOOR
SAN FRANCISCO CA 94111-3834

MAILED

AUG 17 2009

OFFICE OF PETITIONS

In re Application of	:	
Lincoln McBride et al.	:	DECISION
Application No. 10/819,088	:	AMENDING INVENTORSHIP
Filed: April 5, 2004	:	
Attorney Docket No. 020174-010810US	:	

This is a decision on the petitions under 37 CFR §§ 1.48(a) and 1.183 to waive the requirement of 37 CFR 1.64 that the non-signing original inventor re-execute the supplemental declaration and correct the inventorship of the above-noted application. The petitions were originally filed by facsimile on May 14, 2009 and resubmitted August 5, 2009.

The petitions are **GRANTED.**

The petition under 37 CFR 1.48(a) includes a request to correct the inventorship that sets forth the desired inventorship change, statements from each person being added as an inventor that the error in inventorship occurred without deceptive intention on his part, the processing fee set forth in § 1.17(i), and the written consent of the assignee to the correction.

In regard to the required declaration by the actual inventors, petitioner has requested that the supplemental declaration be accepted without the signature of Lincoln McBride who signed the original declaration. On very infrequent occasions, the requirements of 37 CFR 1.64 have been waived upon the filing of a request and the fee set forth in § 1.17(f) for a petition under 37 CFR 1.183 (along with the supplemental oath or declaration) to permit the acceptance of that supplemental oath or declaration signed by less than all the originally signing named inventors. Petitions under 37 CFR 1.47 are only applicable to the initial execution of an original oath or declaration by a given inventor and are not applicable to the re-execution of another or supplemental oath or declaration by that originally signing inventor. In such circumstances, the USPTO will consider a petition under 37 CFR 1.183 requesting waiver of the requirement of 37 CFR 1.64 that each of the actual inventors execute the supplemental oath or declaration, particularly where assignee consent is given to the requested correction. Absent assignee consent, the petition under 37 CFR 1.183 requesting waiver of the re-execution of the oath or declaration will be evaluated as to whether the non-signing inventor was actually given the opportunity to re-execute the oath or declaration, or whether the non-signing inventor could not be reached.

Here, petitioner submits that the signature of originally-named inventor Lincoln McBride could not be obtained. This is accompanied by the assignee's written consent to the requested change. From this statement and assignee's consent, the signature requirement is hereby waived. Also, the fee set forth in §

1.17(f) for a petition under 37 CFR 1.183 has been charged to Deposit Account No. 20-1430 as authorized.

In view of the papers filed May 14, 2009 and resubmitted August 5, 2009, it has been found that this nonprovisional application, as filed, through error and without deceptive intent, failed to properly set forth the inventorship. Accordingly, the inventorship has been corrected in compliance with 37 CFR 1.48(a). The inventorship has been changed by the addition of Yong Yi of Burlingame, California.

This application is being referred to the Office of Data Management for processing.

Telephone inquiries regarding this decision should be directed to the undersigned at (571) 272-6692.

Christopher Bottorff
Petitions Examiner
Office of Petitions

UNITED STATES PATENT AND TRADEMARK OFFICE

Commissioner for Patents
United States Patent and Trademark Office
P.O. Box 1450
Alexandria, VA 22313-1450
www.uspto.gov

In re Application of	:	
McBride, et al.	:	
Application No. 10/819,088	:	DECISION ON PETITION
Filing Date: 05 April 2004	:	
For: MICROFLUIDIC DEVICE AND METHODS OF	:	
USING SAME	:	

This is a decision on the petition filed December 30, 2004 requesting the acceptance of color photographs into the above-identified application.

On December 30, 2004, formal drawings, the present petition and authorization to charge counsel's deposit account for the $130.00 petition fee were filed. Petitioners request that color photographs be accepted in order to fulfill the requirement for formal drawings. Petitioners argue that the color photographs are necessary to properly depict certain benefits and some variations which are impractical to show without color. In support of the petition, three (3) copies of the color photographs and an amendment to the specification, were filed.

37 CFR § 1.84(b)(2) states that color photographs will be accepted in utility patent applications only after granting a petition explaining why the color photographs are necessary. The petition must include the following:

(i) The appropriate fee set forth in § 1.17(h);

(ii) Three (3) sets of color drawings; and

(iii) The specification must contain the following language as the first paragraph in that portion of the specification relating to the brief description of the drawings:

"The file of this patent contains at least one drawing executed in color. Copies of this patent with color drawing(s) will be provided by the Patent and Trademark Office upon request and payment of the necessary fee."

A review of the record reveals that petitioners have fulfilled the requirements of 37 CFR 1.84. The petition is granted. The color photographs have been accepted and will be forwarded to the Official Draftsperson for formal review.

PETITION GRANTED

/Jill Warden/
Supervisory Patent Examiner
Group Art Unit 1797

UNITED STATES PATENT AND TRADEMARK OFFICE

Commissioner for Patents
United States Patent and Trademark Office
P.O. Box 1450
Alexandria, VA 22313-1450
www.uspto.gov

APPLICATION NUMBER	FILING/RECEIPT DATE	FIRST NAMED APPLICANT	ATTORNEY DOCKET NUMBER
10/819,090	04/06/04	Kernan	2936.1001-000

CONFIRMATION NO. 3814

HAMILTON, BROOK, SMITH & REYNOLDS, P.C.
530 VIRGINIA ROAD
P.O. BOX 9133
CONCORD MA 01742-9133

Date Mailed: April 7, 2005

Letter Regarding Petition Under 37 CFR 1.182 Filed With Replacement Drawings

The petition under 37 CFR 1.182 filed November 26, 2004 is acknowledged.

The procedure for submitting replacement drawings by filing a petition under 37 CFR 1.182 and a petition fee has been eliminated. Mail Stop PGPUB Drawings has also been eliminated. The Office may include any replacement drawings filed in compliance with 37 CFR 1.84 and 1.121(d) in the patent application publication if the replacement drawings are entered into the Office file wrapper of the application before technical preparations for publication of the application have begun (generally four months prior to the projected publication date.) See *Changes To Support Implementation of the United States Patent and Trademark Office 21st Century Strategic Plan*, Final Rule, 68 *Fed. Reg.* 56481, 56514-56525 (Sept. 21, 2004).

Accordingly, the replacement drawings filed with the petition under 37 CFR 1.182 may be included in the patent application publication if the drawings are in compliance with 37 CFR 1.84 and 1.121(d) and if they are entered into the Office file wrapper of the application before technical preparations for publication of the application have begun.

If a petition fee or processing fee was submitted with the replacement drawings, then the fee has been refunded.

Telephone inquiries regarding this letter should be directed to the Office of Patent Publication, Pre-Grant Publication Division, 703-605-4283.

Kaletha King
Pre Grant Publication

5/13/04

UNITED STATES PATENT AND TRADEMARK OFFICE

Commissioner for Patents
United States Patent and Trademark Office
P.O. Box 1450
Alexandria, VA 22313-1450
www.uspto.gov
DIW 10-04

PATTERSON, THUENTE, SKAAR & CHRISTENSEN, P.A.
4800 IDS CENTER
80 SOUTH 8TH STREET
MINNEAPOLIS MN 55402-2100

COPY MAILED

OCT 27 2004

OFFICE OF PETITIONS

In re Application of	:
Oyen and Tracey	:
Application No. 10/819,092	: DECISION REFUSING STATUS
Filed: 6 April, 2004	: UNDER 37 CFR 1.47(a)
Atty Docket No. 2947.03US03	:

This is in response to the petition filed under 37 CFR 1.47(a) on 13 September, 2004.

The petition is **DISMISSED**.

Rule 47 applicant is given TWO MONTHS from the mailing date of this decision to reply, correcting the below-noted deficiencies. Any reply should be entitled "Request for Reconsideration of Petition Under 37 CFR 1.47(a)," and should only address the deficiencies noted below, except that the reply may include an oath or declaration executed by the non-signing inventor. **FAILURE TO RESPOND WILL RESULT IN ABANDONMENT OF THE APPLICATION.** Extensions of time may be obtained in accordance with 37 CFR 1.136(a).

The above-identified application was filed on 6 April, 2004, without an executed oath or declaration. Accordingly, on 21 June, 2004, Initial Patent Examination Division mailed a Notice to File Missing Parts of Nonprovisional Application, requiring the statutory basic filing fee, an executed oath or declaration, and a surcharge for its late filing. A two (2) month period for reply was set.

In response, on 13 September, 2004, petitioners filed the present petition, petition fee, a one (1) month extension of time, the statutory basic filing fee, surcharge and a declaration naming Duane P. Oyen and Timothy N. Tracey as joint inventors and signed by joint inventor Oyen on behalf of himself and on behalf of joint inventor Tracey.

Petitioners' counsel asserts that a copy of the declaration and an assignment were sent to joint inventor Tracey, but he orally refused to sign the documents.

A grantable petition under 37 CFR 1.47(a) requires:

(1) proof that the non-signing inventor cannot be reached or located, notwithstanding diligent effort, or refuses to sign the oath or declaration after having been presented with the application papers (specification, claims and drawings);
(2) an acceptable oath or declaration in compliance with 35 U.S.C. §§ 115 and 116;
(3) the petition fee;
(4) a surcharge of $130 or $65 (small entity) if the petition and/or declaration is not filed at the time of filing the application, and
(5) a statement of the last known address of the non-signing inventor.

The petition lacks item (1). With regard to the non-signing inventor's oral refusal to sign, in order for a Rule 47 petition to be granted, the inventor **must** be afforded an opportunity to review the application.[1] Petitioners, however, have not shown that the application (specification, including the claims, drawings, if any, and the declaration) was sent or given to joint inventor Tracey. Therefore, petitioners should sent a copy of the application papers to Tracey's last known address. Petitioners may show proof that a copy of the application was sent or given to the non-signing inventor for review by providing a copy of the cover letter transmitting the application papers (specification, including claims, drawings, if any, and the declaration) to the non-signing inventor or details given in an affidavit or declaration of facts by a person having first-hand knowledge of the details.

If the inventor refuses in writing, petitioners must submit a copy of that written refusal with any renewed petition. If the refusal was made orally to a person, then that person must provide details of the refusal in an affidavit or declaration of facts.

---

[1] See In re Gray, 115 USPQ 80 (Comm'r Pat. 1956). The application papers must be sent or given to the non-signing inventor unless he or she refuses to accept delivery of the papers.

Further correspondence with respect to this matter should be addressed as follows:

By mail: Mail Stop Petition
Commissioner for Patents
P.O. Box 1450
Alexandria, VA 22313-1450

By FAX: (703) 872-9306
Attn: Office of Petitions

By hand: U.S. Patent and Trademark Office
220 20th Street S.
Customer Window, Mail Stop Petition
Crystal Plaza 2, Lobby, Room 1B03
Arlington, VA 22202

Telephone inquiries related to this decision should be directed to the undersigned at 571-272-3231.

Douglas I. Wood
Senior Petitions Attorney
Office of Petitions

UNITED STATES PATENT AND TRADEMARK OFFICE

Commissioner for Patents
United States Patent and Trademark Office
P.O. Box 1450
Alexandria, VA 22313-1450
www.uspto.gov

MAIL

AUG 16 2006

DIRECTOR OFFICE
TECHNOLOGY CENTER 2600

C. IRVIN MCCLELLAND
OBLON, SPIVAK, MCCLELLAND, MAIER & NEUSTADT, P.C.
1940 DUKE STREET
ALEXANDRIA VA 22314

In re Application of
MUREN, PETTER, et al.
Application No. 10/819,108
Filed: April 7, 2004
For: **ARRANGEMENT AND METHOD FOR AUDIO SOURCE TRACKING**

DECISION ON PETITION TO MAKE SPECIAL

This is a decision on the petition filed July 11, 2006 under Manual of Patent Examination Procedure §708.02, VIII requesting accelerated examination.

The petition under Manual of Patent Examination Procedure §708.02, VIII, must:

(1) be filed prior to receiving any examination by the examiner,
(2) be accompanied by the required fee- $130,
(3) the claims should be directed to a single invention (if it is determined that the claims pertain to more than one invention, then applicant will have to make an election without traverse or forfeit accelerated examination status),
(4) state that a pre-examination search was made, and fully discuss the search method employed, such as classes and subclasses searched, publications, Chemical abstracts, patents, etc. A search made by a foreign patent office satisfies this requirement,
(5) be accompanied by a copy of each of the references most closely related to the subject matter encompassed by the claims if said references are not already of record,
(6) fully discuss the references, pointing out with the particularity required by 37 C.F.R. §1.111 (b) and (c), how the claimed subject matter is patentable over the references.

The petitioner meets all the above-listed requirements. Accordingly, the petition is **GRANTED**.

The application will retain its special status throughout its entire prosecution, including any appeal to the Board of Patent Appeals and Interferences, subject only to diligent prosecution by the applicant. The application file is being forwarded to the examiner for appropriate action in due course.

Kenneth A. Wieder
Special Program Examiner
Technology Center 2600
Communications

UNITED STATES PATENT AND TRADEMARK OFFICE

Commissioner for Patents
United States Patent and Trademark Office
P.O. Box 1450
Alexandria, VA 22313-1450
www.uspto.gov

COPY MAILED

OCT 16 2006

OFFICE OF PETITIONS

ARNOLD & PORTER LLP
ATTN: IP DOCKETING
555 TWELFTH STREET NW
WASHINGTON DC 20004

In re Application	:	
Tsukamoto, et al.	:	
Application No. 10/819,146	:	DECISION ON PATENT TERM
Filed: April 7, 2004	:	ADJUSTMENT
Attorney Docket No. 20595.002	:	

This is a decision on the "Application for Patent Term Adjustment," filed July 7, 2006, requesting correction of the initial determination of patent term adjustment (PTA) from fifty-three (53) days to one hundred ten (110) days.

The application for patent term adjustment is **GRANTED**.

The Office has updated the PAIR screen to reflect that the correct Patent Term Adjustment (PTA) determination at the time of the mailing of the Notice of Allowance is **one hundred ten (110) days**. A copy of the updated PAIR screen, showing the correct determination, is enclosed.

On April 10, 2006, the Office mailed the Determination of Patent Term Adjustment under 35 U.S.C. 154(b) in the above identified application. The Notice stated that the patent term adjustment (PTA) to date is fifty-three (53) days. On July 7, 2006, Applicants timely[1] submitted the instant application for patent term adjustment, asserting that the correct number of days of PTA at the time of the mailing of the Notice of Allowance is one hundred ten (110) days.

Applicants assert entitlement to a patent term adjustment of one hundred ten (110) days on the basis that the PTO improperly assessed Applicants a delay of fifty-seven (57) days for filing an Information Disclosure Statement (IDS) on December 3, 2004, after Applicants had filed a response on October 7, 2004.

Applicants state that the patent issuing from the application is not subject to a terminal disclaimer.

The Office initially determined a patent term adjustment of fifty-three (53) days based on an adjustment for PTO delay of one hundred eleven (111) days pursuant to 35 U.S.C. 154(b)(1)(A)(ii) and 37 C.F.R. § 1.703(a)(2), reduced by Applicants' delay of fifty-seven (57) days pursuant to 35 U.S.C. 154(b)(2)(C)(i) and 37 C.F.R. § 1.704(c)(8) and one (1) day pursuant to 35 U.S.C. 154(b)(2)(C)(ii) and 37 C.F.R. § 1.704(b). The adjustment of 57 days is at issue.

A review of the application file reveals that the IDS filed on December 3, 2004, contained a transmittal letter, stating that it was being filed in response to a request from the Examiner.

In view of the above, it is concluded that the IDS filed on December 3, 2004 was expressly requested by the Examiner. As such, no applicant delay should have been assessed.

Accordingly, the correct determination of PTA at the time of mailing of the Notice of Allowance is **one hundred ten (110) days** (111 days of PTO delay and 1 day of applicant delay).

Receipt of the $200 fee set forth in 37 C.F.R. § 1.18(e) is acknowledged.

The application file is being forwarded to the Office of Patent Publication for processing into a patent.

---

[1] Applicants filed the application for patent term adjustment together with the payment of the issue fee.

Telephone inquiries specific to this matter should be directed to Cliff Congo, Petitions Attorney, at (571)272-3207.

Kery Fries
Senior Legal Advisor
Office of Patent Legal Administration
Office of Deputy Commissioner
for Patent Examination Policy

Enc: updated PAIR screen (2 pages)

Day : Saturday
Date: 10/14/2006

PALM INTRANET

Time: 13:59:12

PTA Calculations for Application: 10/819146

Application Filing Date:	04/07/2004	PTO Delay (PTO):	111
Issue Date of Patent:		Three Years:	0
Pre-Issue Petitions:	0	Applicant Delay (APPL):	58
Post-Issue Petitions:	0	Total PTA (days):	110
PTO Delay Adjustment:	57		

File Contents History

Number	Date	Contents Description	PTO	APPL	START
54	10/14/2006	ADJUSTMENT OF PTA CALCULATION BY PTO	57		
46	04/10/2006	MAIL NOTICE OF ALLOWANCE			
45	04/10/2006	MAIL FORMAL DRAWINGS REQUIRED			
44	04/10/2006	MAIL EXAMINER'S AMENDMENT			
43	04/10/2006	MAIL EXAMINER INTERVIEW SUMMARY (PTOL - 413)			
42	04/04/2006	ISSUE REVISION COMPLETED			
41	04/04/2006	FORMAL DRAWINGS REQUIRED			
40	04/04/2006	NOTICE OF ALLOWANCE DATA VERIFICATION COMPLETED			
39	04/04/2006	CASE DOCKETED TO EXAMINER IN GAU			
38	04/04/2006	EXAMINER INTERVIEW SUMMARY RECORD (PTOL - 413)			
37	04/04/2006	EXAMINER'S AMENDMENT COMMUNICATION			
36	04/04/2006	NOTICE OF ALLOWABILITY			
35	02/28/2006	DATE FORWARDED TO EXAMINER			
34	02/13/2006	RESPONSE AFTER NON-FINAL ACTION			
33	01/30/2006	MAIL EXAMINER INTERVIEW SUMMARY (PTOL - 413)			
32	01/23/2006	EXAMINER INTERVIEW SUMMARY RECORD (PTOL - 413)			
31	11/23/2005	MAIL NON-FINAL REJECTION	111		23
30	11/21/2005	NON-FINAL REJECTION			
29	11/10/2005	EXAMINER INTERVIEW SUMMARY RECORD (PTOL - 413)			
28	10/13/2005	CASE DOCKETED TO EXAMINER IN GAU			
27	07/13/2005	CASE DOCKETED TO EXAMINER IN GAU			
26	04/04/2005	REFERENCE CAPTURE ON IDS			

25	04/04/2005	INFORMATION DISCLOSURE STATEMENT (IDS) FILED		0	23
24	04/20/2005	DATE FORWARDED TO EXAMINER			
23	04/04/2005	RESPONSE AFTER NON-FINAL ACTION		1	21
22	12/03/2004	INFORMATION DISCLOSURE STATEMENT (IDS) FILED		57	18
21	01/03/2005	MAIL NON-FINAL REJECTION			
20	12/29/2004	NON-FINAL REJECTION			
19	11/03/2004	DATE FORWARDED TO EXAMINER			
18	10/07/2004	RESPONSE TO ELECTION / RESTRICTION FILED			
17	10/07/2004	WORKFLOW INCOMING AMENDMENT IFW			
16	09/13/2004	MAIL RESTRICTION REQUIREMENT			
15	09/09/2004	REQUIREMENT FOR RESTRICTION / ELECTION			
14	08/25/2004	CASE DOCKETED TO EXAMINER IN GAU			
13	08/25/2004	IFW TSS PROCESSING BY TECH CENTER COMPLETE			
12	04/07/2004	REFERENCE CAPTURE ON IDS			
11	04/07/2004	INFORMATION DISCLOSURE STATEMENT (IDS) FILED			
10	06/21/2004	APPLICATION RETURN FROM OIPE			
9	06/21/2004	APPLICATION RETURN TO OIPE			
8	06/21/2004	APPLICATION DISPATCHED FROM OIPE			
7	06/22/2004	APPLICATION IS NOW COMPLETE			
6	05/19/2004	CLEARED BY L&R (LARS)			
5	05/06/2004	REFERRED TO LEVEL 2 (LARS) BY OIPE CSR			
4	05/06/2004	CASE CLASSIFIED BY L&R			
3	05/06/2004	CASE CLASSIFIED BY L&R			
2	04/15/2004	IFW SCAN & PACR AUTO SECURITY REVIEW			
1	04/07/2004	INITIAL EXAM TEAM NN			

Search Another: Application# Search

EXPLANATION OF PTA CALCULATION

EXPLANATION OF PTE CALCULATION

To go back use Back button on your browser toolbar.

Back to PALM | ASSIGNMENT | OASIS | Home page

UNITED STATES PATENT AND TRADEMARK OFFICE

Commissioner for Patents
United States Patent and Trademark Office
P.O. Box 1450
Alexandria, VA 22313-1450
www.uspto.gov

ANTONELLI, TERRY, STOUT & KRAUS, LLP
1300 NORTH SEVENTEENTH STREET
SUITE 1800
ARLINGTON VA 22209-3873

MAILED

MAY 10 2010

OFFICE OF PETITIONS

In re Application of Shigeru Itou et al. Application No. 10/819,187 Filed: April 7, 2004 Attorney Docket No. 501.43734X00	: : : : :	ON PETITION

This is a decision regarding your request under 37 CFR 1.28. for acceptance of a fee deficiency submission and loss of small entity status filed March 23, 2010.

On September 1, 1998, the Court of Appeals for the Federal Circuit held that 37 CFR 1.28(c) is the sole provision governing the time for correction of the erroneous payment of the issue fee as a small entity. See DH Technology v. Synergystex International, Inc.. 154 F.33d 1333, 47 USPQ2d 1865 (Fed. Cir. Sept. 1, 1998).

The Office no longer investigates or rejects original or reissue applications under 37 CFR 1.56. 1098 Off. Gaz. Pat. Office 502 (January 3, 1989). Therefore nothing in this Notice is intended to imply that an investigation was done.

Your fee deficiency submission under 37 CFR 1.28 is hereby accepted and the petition is **GRANTED**. Status as a small entity has also been removed.

Inquiries related to this communication should be directed to the Office of Petitions Staff at (571) 272-3282.

Patricia Faison-Ball

Patricia Faison-Ball
Senior Petitions Attorney
Office of Petitions

UNITED STATES PATENT AND TRADEMARK OFFICE

Commissioner for Patents
United States Patent and Trademark Office
P.O. Box 1450
Alexandria, VA 22313-1450
www.uspto.gov

MAILED

MAY 1 2 2005

Technology Center 2100

MATTINGLY, STANGER, MALUR & BRUNDIDGE, P.C.
1800 DIAGONAL ROAD
SUITE 370
ALEXANDRIA, VA 22314

In re Application of: OEDA, et al.
Application No. 10/819,191
Filed: April 7, 2004
For: SYSTEM EXECUTING LOG DATA TRANSFER SYNCHRONOUSLY AND DATABASE DATA TRANSFER ASYNCHRONOUSLY

DECISION ON PETITION TO MAKE SPECIAL (ACCELERATED EXAMINATION) UNDER M.P.E.P. §708.02 (VIII)

This is a response to the petition filed April 12, 2005, under 37 C.F.R. §1.102(d) and M.P.E.P. §708.02 (VIII): Accelerated Examination, to make the above-identified application special.

The Petition is **DISMISSED**.

M.P.E.P. §708.02, Section VIII which sets out the prerequisites for a grantable petition for Accelerated Examination under 37 C.F.R. §1.102(d) states in relevant part:

A new application (one which has not received any examination by the examiner) may be granted special status provided that applicant (and this term includes applicant's attorney or agent) complies with each of the following items:

(a) Submits a petition to make special accompanied by the fee set forth in **37 CFR 1.17(h)**;

(b) Presents all claims directed to a single invention, or if the Office determines that all the claims presented are not obviously directed to a single invention, will make an election without traverse as a prerequisite to the grant of special status;

(c) Submits a statement(s) that a pre-examination search was made, listing the field of search by class and subclass, publication, Chemical Abstracts, foreign patents, etc. The pre-examination search must be directed to the invention as claimed in the application for which special status is requested. A search made by a foreign patent office satisfies this requirement;

(d) Submits one copy each of the references deemed most closely related to the subject matter encompassed by the claims if said references are not already of record; and

(e) Submits a detailed discussion of the references, which discussion points out, with the particularity required by 37 CFR 1.111 (b) and (c), how the claimed subject matter is patentable over the references.

The petition filed April 12, 2005 fails to adequately meet requirement (e) of the criteria set forth above.

With respect to requirement (e), a complete detailed discussion of the (aforementioned most closely related) references has not been provided with the necessary specificity required under 37 CFR 1.111 (b) and (c). Specifically, Petitioner should ensure that the above discussion is directed to how the language of **each of the independent claims** are specifically distinguishable and patentable from the references provided in requirement (d) above. It is deemed that the following statements as presented by Petitioner in the discussion, after listing out the outstanding features:

> (1) all of the independent claims recite at least one of these features of the present invention as recited in the claims; and
> (2) the references do not teach "both synchronous and asynchronous processes remote copy being used **in the manner as recited** in the first, second, third, fourth and fifth features of the present invention recited in each of the claims" (emphasis added),

are vague and they do not provide specifics about distinguishable and patentable features over the references. Furthermore, it is noted that independent claims 1, 4-5, 8 and 24 differ in scope, from the discussion presented in the petition, with respect to each other; for example, at least claim 4 does not include the limitations of synchronous and asynchronous processes, which are recited in all other independent claims.

Accordingly, Petition to Make Special is **DISMISSED**.

Petitioner is given one opportunity to perfect the petition. Any request for reconsideration must be filed within TWO MONTHS of the mail date of this decision. Extensions of time under 37 CFR 1.136(a) are permitted by a declaration or statement providing the information as outlined above.

Until the renewed petition is submitted, the application will be returned to the examiner's docket to await treatment on the merits in the normal order of examination.

4/29/05

Brian L. Johnson
Special Program Examiner
Technology Center 2100
Computer Architecture, Software and Information Security
571-272-3595

SDL: 04/29/05

UNITED STATES PATENT AND TRADEMARK OFFICE

Commissioner for Patents
United States Patent and Trademark Office
P.O. Box 1450
Alexandria, VA 22313-1450
www.uspto.gov

MATTINGLY, STANGER, MALUR &
BRUNDIDGE, P.C.
1800 Diagonal Road
Suite 370
Alexandria, VA 22314

MAILED

DEC 16 2005

TECHNOLOGY CENTER 2100

In re Application of:
T. OEDA et al
Application No. 10/819,191
Filed: April 7, 2004
For: SYSTEM EXECUTING LOG DATA TRANSFER SYNCHRONOUSLY AND DATABASE DATA TRANSFER ASYNCHRONOUSLY

DECISION ON PETITION TO MAKE SPECIAL

This is a decision on the renewed petitions, filed on July 12, 2005 under 37 C.F.R. §102(d) and M.P.E.P. § 708.02(VIII): Accelerated Examination, to make the above-identified application special.

The petition is **GRANTED**.

M.P.E.P. § 708.02, Section VIII which sets out the prerequisites for a grantable petition for Accelerated Examination under 37 C.F.R. § 102(d) states in relevant part:

> A new application (one which has not received any examination by the examiner) may be granted special status provided that applicant (and this term includes applicant's attorney or agent) complies with each of the following items:
>
> (A) Submits a petition to make special accompanied by the fee set forth in 37 CFR 1.17(h);
>
> (B) Presents all claims directed to a single invention, or if the Office determines that all the claims presented are not obviously directed to a single invention, will make an election without traverse as a prerequisite to the grant of special status;
>
> (C) Submits a statement(s) that a pre-examination search was made, listing the field of search by class and subclass, publication, Chemical Abstracts, foreign patents, etc. A search made by a foreign patent office satisfies this requirement;
>
> (D) Submits one copy each of the references deemed most closely related to the subject matter encompassed by the claims if said references are not already of record; and
>
> (E) Submits a detailed discussion of the references, which discussion points out, with the particularity required by 37 CFR 1.111 (b) and (c), how the claimed subject matter is patentable over the references.

Applicant's submission of July 12, 2005 meets all the criteria set out above. Accordingly, the petition is **GRANTED**. The application file is being forwarded to the Examiner for accelerated examination in accordance with M.P.E.P. § 708.02. If the application is subsequently allowed, it will be given priority for printing. See M.P.E.P. § 1309.

Vincent N. Trans
Special Program Examiner
Technology Center 2100
Computer Architecture, Software, and
Information Security
571-272-3613

UNITED STATES PATENT AND TRADEMARK OFFICE

Commissioner for Patents
United States Patent and Trademark Office
P.O. Box 1450
Alexandria, VA 22313-1450
www.uspto.gov

OLIFF & BERRIDGE, PLC
P.O. BOX 320850
ALEXANDRIA VA 22320-4850

COPY MAILED

NOV 13 2007

OFFICE OF PETITIONS

In re Application of :
Seike, et al. :
Application No. 10/819,214 :
Filed: April 7, 2004 :
Attorney Docket No. 119204 :
For: ANTITHEFT DEVICE, MONITORING DEVICE AND ANTITHEFT SYSTEM

ON PETITION

This is a decision on the request that the Office withdraw the holding of abandonment of the above-identified application. The request was filed on October 16, and will be treated as a feeless petition under 37 CFR 1.181.

The petition under 37 CFR 1.181 is **GRANTED**.

This application was held abandoned for failure to respond in a timely manner to the non-final Office action, mailed January 26, 2007, which set forth an extendable three (3) month period for reply. The Office contended that this application became abandoned on April 27, 2007 for failure to reply to the January 26, 2007 non-final Office action. A Notice of Abandonment was mailed on September 20, 2007.

Petitioners request withdrawal of the holding of abandonment based on the assertion that a request for a one month extension of time and a request for reconsideration, including additional arguments, were filed on May 29, 2007. (May 26, 2007 fell on a Saturday. May 28, 2007 was a holiday. Therefore, a response filed on May 29, 2007 with a one month extension of time would be timely filed.) The undersigned finds this argument completely convincing, as the request for reconsideration, including additional arguments, and a check for a $120.00 extension of time were received in the Office on May 29, 2007. Office financial records show that the check for the required one month extension of time fee was negotiated on accounting date May 31, 2007. Therefore, a proper reply to the January 26, 2007 non-final Office action was timely filed.

The petition under 37 CFR 1.181 is **granted**, the holding of abandonment is withdrawn, and the September 20, 2007 Notice of Abandonment is **vacated**.

After the mailing of this decision, the application file will be returned to Technology Center A.U. 2612 for consideration of the reply filed on May 29, 2007.

Telephone inquiries pertaining to this matter may be directed to the undersigned at (571) 272-3230.

Shirene Willis Brantley

Shirene Willis Brantley
Senior Petitions Attorney
Office of Petitions
Office of the Deputy Commissioner
for Patent Examination Policy

UNITED STATES PATENT AND TRADEMARK OFFICE

Commissioner for Patents
United States Patent and Trademark Office
P.O. Box 1450
Alexandria, VA 22313-1450
www.uspto.gov

ALBIHNS STOCKHOLM AB
BOX 5581, LINNEGATAN 2
SE-114 85 STOCKHOLM; SWEDENn
STOCKHOLM SE SWEDEN

COPY MAILED

OCT 13 2006

OFFICE OF PETITIONS

In re Application of	:	
JIANG, et al.	:	
Application No. 10/819,215	:	DECISION ON PETITION
Filed: April 7, 2004	:	TO WITHDRAW
Attorney Docket No. 70376-74586	:	FROM RECORD
	:	

This is a decision on the Request to Withdraw as attorney or agent of record under 37 C.F.R. § 1.36(b), filed June 28, 2006.

The request is **NOT APPROVED** as moot.

A review of the file record indicates that the power of attorney to Olivia Tolan, Reginald Finn and Timothy Platt has been revoked by the assignee of the patent application on August 31, 2006. Accordingly, the request to withdraw under 37 C.F.R. § 1.36(b) is moot.

All future communications from the Office will continue to be directed to the below-listed address until otherwise notified by applicant.

Telephone inquires concerning this decision should be directed to Monica A. Graves at 571-272-7253.

David Bucci
Petitions Examiner
Office of Petitions

cc: **NIXON & VANDERHYE, PC**
901 NORTH GLEBE ROAD, 11TH FLOOR
ARLINGTON, VA 22203

UNITED STATES PATENT AND TRADEMARK OFFICE

UNITED STATES DEPARTMENT OF COMMERCE
United States Patent and Trademark Office
Address: COMMISSIONER FOR PATENTS
P.O. Box 1450
Alexandria, Virginia 22313-1450
www.uspto.gov

APPLICATION NUMBER	FILING OR 371 (c) DATE	FIRST NAMED APPLICANT	ATTY. DOCKET NO./TITLE
10/819,215	04/07/2004	Wen Jiang	70376-74586

CONFIRMATION NO. 5355

OC000000020785622

26288
ALBIHNS STOCKHOLM AB
BOX 5581, LINNEGATAN 2
SE-114 85 STOCKHOLM; SWEDENn
STOCKHOLM,
SWEDEN

Date Mailed: 10/11/2006

NOTICE REGARDING CHANGE OF POWER OF ATTORNEY

This is in response to the Power of Attorney filed 08/31/2006.

- The Power of Attorney to you in this application has been revoked by the assignee who has intervened as provided by 37 CFR 3.71. Future correspondence will be mailed to the new address of record(37 CFR 1.33).

MONICA A GRAVES
OP (571) 272-7253

FORMER ATTORNEY/AGENT COPY

UNITED STATES PATENT AND TRADEMARK OFFICE

UNITED STATES DEPARTMENT OF COMMERCE
United States Patent and Trademark Office
Address: COMMISSIONER FOR PATENTS
P.O. Box 1450
Alexandria, Virginia 22313-1450
www.uspto.gov

APPLICATION NUMBER	FILING OR 371 (c) DATE	FIRST NAMED APPLICANT	ATTY. DOCKET NO./TITLE
10/819,215	04/07/2004	Wen Jiang	70376-74586

CONFIRMATION NO. 5355

OC000000020785648

23117
NIXON & VANDERHYE, PC
901 NORTH GLEBE ROAD, 11TH FLOOR
ARLINGTON, VA 22203

Date Mailed: 10/11/2006

NOTICE OF ACCEPTANCE OF POWER OF ATTORNEY

This is in response to the Power of Attorney filed 08/31/2006.

The Power of Attorney in this application is accepted. Correspondence in this application will be mailed to the above address as provided by 37 CFR 1.33.

MONICA A GRAVES
OP (571) 272-7253

ATTORNEY/APPLICANT COPY

UNITED STATES PATENT AND TRADEMARK OFFICE

UNITED STATES DEPARTMENT OF COMMERCE
United States Patent and Trademark Office
Address: COMMISSIONER FOR PATENTS
P.O. Box 1450
Alexandria, Virginia 22313-1450
www.uspto.gov

Computer Patent Annuities,Inc.
901 N.Washington Street
Suite 305
Alexandria,, VA 22314

Mail Date: 04/21/2010

Applicant	: Wen Jiang	: DECISION ON REQUEST FOR
Patent Number	: 7632389	: RECALCULATION of PATENT
Issue Date	: 12/15/2009	: TERM ADJUSTMENT IN VIEW
Appliction No	: 10/819,215	: OF WYETH AND NOTICE OF INTENT TO
Filed	: 04/07/2004	: ISSUE CERTIFICATE OF CORRECTION
		:

The Request for Recalculation is **GRANTED** to the extent indicated.

The patent term adjustment has been determined to be **1556** days. The USPTO will *sua sponte* issue a certificate of correction reflecting the amount of PTA days determined by the recalculation.

Prior to the issuance of the certificate of correction, the USPTO will afford patentee an opportunity to be heard and request reconsideration. Accordingly, patentee has **one month or thirty (30) days**, whichever is longer, to file a request for reconsideration of this patent term adjustment calculation. See 35 U.S.C. 154(b)(3)(B)(ii) and 37 CFR 1.322(a)(4). No extensions of time will be granted under 37 CFR 1.136.

Patentee should use document code PET.OP if electronically filing a request for reconsideration of this patent term adjustment calculation. The patentee must also include the information required by 37 CFR 1.705(b)(2) and the fee required by 37 CFR 1.18(e). If patentee does not file a timely request for reconsideration of this patent term adjustment calculation including the information required by 37 CFR 1.705(b)(2) and the fee required by 37 CFR 1.18(e), the USPTO will issue a certificate of correction reflecting the PTA determination noted above.

Patentee should be aware that in order to preserve the right to review in the United States District Court for the District of Columbia of the USPTO patent term adjustment determination, patentee must ensure that he or she also take the steps required under 35 U.S.C. 154(b)(4)(A) in a timely manner. Nothing in the request for recalculation should be construed as providing an alternative time frame for commencing a civil action under 35 U.S.C. 154(b)(4)(A).

Any questions concerning this decision should be directed to the Office of Patent Legal Administration at 571-272-7702.

SPE RESPONSE FOR CERTIFICATE OF CORRECTION

Paper No.: _____

DATE : 04/29/10

TO SPE OF : ART UNIT 1795

SUBJECT : Request for Certificate of Correction for Appl. No.: 10819215 Patent No.: 7632389

Please respond to this request for a certificate of correction within 7 days.

FOR IFW FILES:

Please review the requested changes/corrections as shown in the **COCIN** document(s) in the IFW application image. No new matter should be introduced, nor should the scope or meaning of the claims be changed.

Please complete the response (see below) and forward the completed response to scanning using document code **COCX**.

FOR PAPER FILES:

Please review the requested changes/corrections as shown in the attached certificate of correction. Please complete this form (see below) and forward it with the file to:

Certificates of Correction Branch (C of C)
Randolph Square 9D40-D
Palm Location 7580

You can fax the Directors/SPE response to 571-270-9990

Lamonte Newsome
Certificates of Correction Branch
703-756-1574

Thank You For Your Assistance

The request for issuing the above-identified correction(s) is hereby:
Note your decision on the appropriate box.

- ☒ **Approved** — **All** changes apply.
- ☐ **Approved in Part** — Specify below which changes **do not** apply.
- ☐ **Denied** — State the reasons for denial below.

Comments: _____

Nam Nguyen
SPE

1795
Art Unit

UNITED STATES PATENT AND TRADEMARK OFFICE

UNITED STATES DEPARTMENT OF COMMERCE
United States Patent and Trademark Office
Address: COMMISSIONER FOR PATENTS
P.O. Box 1450
Alexandria, Virginia 22313-1450
www.uspto.gov

Computer Patent Annuities,Inc.
901 N.Washington Street
Suite 305
Alexandria,, VA 22314

Mail Date: 05/18/2010

Applicant : Wen Jiang
Patent Number : 7632389
Issue Date : 12/15/2009
Application No : 10/819,215
Filed : 04/07/2004

: NOTICE CONCERNING IMPROPER
: CALCULATION OF PATENT TERM
: ADJUSTMENT BASED UPON USPTO
: IMPROPERLY MEASURING REDUCTION
: PERIOD UNDER 37 CFR 1.704(c)(10).

The United States Patent and Trademark Office (USPTO) discovered that in processing the recent recalculation decisions mailed in response to patentee's filed Request for Recalculation of Patent Term Adjustment in view of Wyeth, the USPTO improperly measured the reduction period for reductions under 37 CFR 1.704(c)(10). Pursuant to 37 CFR 1.704(c)(10), patentee's reduction begins on the date of filing the amendment under 37 CFR 1.312 ("1.312 amendment") or other related paper and ends on the date that the Office mails a response to the filing of the 1.312 amendment or other paper. It has been discovered that during the recalculation, the calculation failed to the limit the reduction to the mail date of the response to the 1.312 amendment or other paper. Accordingly, patentee's reductions were greater than warranted.

This notice **VACATES** the previous GRANTED request for recalculation and provides patentee with a revised GRANTED recalculation.

The patent term adjustment has been determined to be **1602** days. The USPTO will *sua sponte* issue a certificate of correction reflecting the amount of patent term adjustment (PTA) days determined by the recalculation.

Prior to the issuance of the certificate of correction, the USPTO will afford patentee an opportunity to be heard and request reconsideration. Accordingly, patentee has **one month or thirty (30) days** from the mail date of this notice, whichever is longer, to file a request for reconsideration of this PTA calculation. See 35 U.S.C. § 154(b)(3)(B)(ii) and 37 CFR 1.322(a)(4).

Patentee should use document code PET.OP if electronically filing a request for reconsideration of this PTA calculation. The patentee must also include the information required by 37 CFR 1.705(b)(2), and the fee required by 37 CFR 1.18(e). If patentee does not file a timely request for reconsideration of this PTA calculation, including the information required by 37 CFR 1.705(b)(2) and the fee required by 37 CFR 1.18(e), the USPTO will issue a certificate of correction reflecting the PTA determination noted above.

Patentee should be aware that in order to preserve the right of review of the USPTO's PTA determination in the United States District Court for the District of Columbia, patentee must ensure that the steps required under 35 U.S.C. § 154 (b)(4) are taken in a timely manner. Nothing in the request for recalculation should be construed as providing an alternative time frame for commencing a civil action under 35 U.S.C. § 154(b)(4).

UNITED STATES PATENT AND TRADEMARK OFFICE

Commissioner for Patents
United States Patent and Trademark Office
P.O. Box 1450
Alexandria, VA 22313-1450
www.uspto.gov

March 2, 2010

Lina Yang
7201 Hamilton Boulevard
Allentown, PA 18195-1501

Patent No.: 7,563,380 B2
Application No.: 10/819,225
Inventor(s): Chun Christine Dong, et al.
Issued: July 21, 2009
Title: **ELECTRODE ASSEMBLY FOR THE REMOVAL OF SURFACE OXIDES BY ELECTRON ATTACHMENT**

Re: Request for Certificate of Correction

Consideration has been given your request for the issuance of a certificate of correction for the above-identified patent under the provisions of Rule(s) 1.322 and/or 1.323.

Assignees' names and addresses (assignment data) printed in a patent, are based *solely* on information supplied in the appropriate space for identifying the assignment data, i.e., item 3 of the Issue Fee Transmittal Form PTOL-85B. Granting of a request under 37 CFR 3.81(b) is required to correct applicant's error providing ***incorrect or erroneous*** assignment data, *before* issuance of a Certificate of Correction, under 37 CFR 1.323 *(see Manual of Patent Examining Procedures (M.P.E.P) Chp.1400, sect. 1481).* This procedure is required *at any time after the issue fee is paid*, including after issuance of the patent.

In view of the foregoing, your request, in this matter, is hereby denied.

A request to correct the Assignee under 37 CFR 3.81(b) should include:

A. **the processing fee set forth in 37 CFR 1.117(h) (currently $130);**
B. a statement that the failure to include the correct assignee name on the PTOL-85B was inadvertent; and
C. a copy of the Notice of Recordation of Assignment Document, reflecting the reel and frame number where the assignment(s) is recorded and/or reflecting proof of *the date* the assignment was submitted for recordation.

In the Request, Applicant(s) may request that the file be forwarded to Certificates of Correction Branch, for issuance of a Certificate of Correction, if the Request is granted.

Any request under 37 CFR 3.81(b) should be directed to the following address or facsimile number:

By mail:	Mail Stop PETITIONS Commissioner for Patents Post Office Box 1450 Alexandria, VA 22313-1450
By hand:	Customer Service Window Mail Stop Petitions Randolph Building 401 Dulany Street Alexandria, VA 22314
By fax:	(571) 273-0025 ATTN: Office of Petitions

If a fee (currently $100) was previously submitted for consideration of a Request for Certificate of Correction, under CFR 1.323, to correct assignment data, no additional fee is required.

/Virginia Tolbert/
Virginia Tolbert
For Mary Diggs, Supervisor
Decisions & Certificate of Correction Branch
571- 272-0460 (voice)
571-270-9892 (fax)

vt

UNITED STATES PATENT AND TRADEMARK OFFICE

Commissioner for Patents
United States Patent and Trademark Office
P.O. Box 1450
Alexandria, VA 22313-1450
www.uspto.gov

HOWREY LLP-CA
C/O IP DOCKETING DEPARTMENT
2941 FAIRVIEW PARK DRIVE, SUITE 200
FALLS CHURCH, VA 22042-2924

MAILED

MAR 15 2010

OFFICE OF PETITIONS

In re Patent No. 6,987,605	:	
Issue Date: January 17, 2006	:	
Application No. 10/819,237	:	NOTICE
Filed: April 5, 2004	:	
Attorney Docket No. 07783.0040.CNUS02	:	

This is a notice regarding your request for acceptance of a fee deficiency submission under 37 CFR 1.28.

The Office no longer investigates or rejects original or reissue patent under 37 CFR 1.56. **1098 Off. Gaz. Pat. Office 502 (January 3, 1989)**. Therefore, nothing in this Notice is intended to imply that an investigation was done.

Your fee deficiency submission under 37 CFR 1.28 is hereby **ACCEPTED**.

This patent is no longer entitled to small entity status. Accordingly, all future fees paid in this patent must be paid at the large entity rate.

Inquiries related to this communication should be directed to the undersigned at (571) 272-6059.

The patent file will be forwarded to the Files Repository.

A. Kelley

Alicia Kelley
Petitions Examiner
Office of Petitions

UNITED STATES PATENT AND TRADEMARK OFFICE

Commissioner for Patents
United States Patent and Trademark Office
P.O. Box 1450
Alexandria, VA 22313-1450
www.uspto.gov

MAIL

APR 0 4 2005

DIRECTOR OFFICE
TECHNOLOGY CENTER 2100

MATTINGLY, STANGER, & MALUR, P.C.
1800 DIAGONAL ROAD
SUITE 370
ALEXANDRIA VA 22314

In re Application of: Miki
Application No. 10/819,307
Filed: April 7, 2004
For: SHARED/EXCLUSIVE CONTROL SCHEME AMONG SITES INCLUDING STORAGE DEVICE SYSTEM SHARED BY PLURAL HIGH-RANK APPARATUSES AND COMPUTER SYSTEM EQUIPPED WITH THE SAME CONTROL SCHEME

PETITION TO MAKE SPECIAL (ACCELERATED EXAMINATION) UNDER M.P.E.P. §708.02 (VIII)
DECISION ON PETITION

This is a response to the petition filed December 29, 2004, under 37 C.F.R. §1.102(d) and M.P.E.P. §708.02 (VIII): Accelerated Examination, to make the above-identified application special.

The Petition is **DISMISSED**.

M.P.E.P. §708.02, Section VIII which sets out the prerequisites for a grantable petition for Accelerated Examination under 37 C.F.R. §1.102(d) states in relevant part:

A new application (one which has not received any examination by the examiner) may be granted special status provided that applicant (and this term includes applicant's attorney or agent) complies with each of the following items:

(a) Submits a petition to make special accompanied by the fee set forth in **37 CFR 1.17(h)**;

(b) Presents all claims directed to a single invention, or if the Office determines that all the claims presented are not obviously directed to a single invention, will make an election without traverse as a prerequisite to the grant of special status;

(c) Submits a statement(s) that a pre-examination search was made, listing the field of search by class and subclass, publication, Chemical Abstracts, foreign patents, etc. The pre-

examination search must be directed to the invention as claimed in the application for which special status is requested. A search made by a foreign patent office satisfies this requirement;

(d) Submits one copy each of the references deemed most closely related to the subject matter encompassed by the claims if said references are not already of record; and

(e) Submits a detailed discussion of the references, which discussion points out, with the particularity required by 37 CFR 1.111 (b) and (c), how the claimed subject matter is patentable over the references.

In those instances where the request for this special status does not meet all the prerequisites set forth above, petitioner will be notified and the defects in the request will be stated. The application will remain in the status of a new application awaiting action in regular turn. In those instances where a request is defective in one or more respects, petitioner will be given one opportunity to perfect the request in a renewed petition to make special. If perfected, the request will then be granted. If not perfected in the renewed petition, any additional renewed petitions to make special may or may not be considered at the discretion of the Group Special Program Examiner.

The petition filed December 29, 2004 fails to adequately meet requirement (e) of the criteria set forth above. With respect to requirement (e), applicant must provide a detailed discussion of the reference documents. The applicant should discuss each independent claim in view of the references cited. For example, the applicant merely indicates that most of the features of claim 1 are not taught by either reference; however, most of the features of claim 1 are not set forth in the rest of the independent claims. For example, the features of: (a) plural remote-copy purpose logical volumes configuring remote copy-groups, (b) the plural remote-copy purpose logical volumes configuring the remote-copy groups being controlled such that the logical volumes have same contents among the plural storage device systems, (c) shared/exclusive control using a shared logical volume which is unconscious of the remote copy being performed using the high-rank apparatuses in an environment where the remote copy is used and (e) a clustering unit is not set forth in independent claims 7, and 11. Also, items (a), (b), and (c) above are not set forth in independent claim 20.

Petitioner should ensure that the above discussion is directed to how the language of **each of the independent claims** is specifically distinguishable and patentable from the references provided in requirement (d) above. The statement that the references shares the same deficiencies as another reference is not sufficient to meet the requirement of a detailed discussion as required by 37 CFR 1.111 (b) and (c).

The submission does not satisfy the requirement, as it does not provide a **detailed discussion** of the references and it does not point out how the **claimed subject matter is patentable of the references.** Petitioner should ensure that the above discussion is directed to how the language of **each** of the independent claims is specifically distinguishable and patentable from the references provided in requirement (d) above.

Petition to Make Special **DISMISSED**.

Petitioner is given one opportunity to perfect the petition. Any request for reconsideration must be filed within TWO MONTHS of the mail date of this decision.

Until the renewed petition is submitted, the application will be returned to the examiner's docket to await treatment on the merits in the normal order of examination.

Brian L. Johnson
Special Program Examiner
Technology Center 2100
Computer Architecture, Software and Information Security
571-272-3595

4/1/05

JC

UNITED STATES PATENT AND TRADEMARK OFFICE

Commissioner for Patents
United States Patent and Trademark Office
P.O. Box 1450
Alexandria, VA 22313-1450
www.uspto.gov

MATTINGLY, STANGER, MALUR & BRUNDIDGE, P.C.
1800 DIAGONAL ROAD
SUITE 370
ALEXANDRIA, VA 22314

MAILED

APR 26 2006

TECHNOLOGY CENTER 2100

In re Application of: Kenichi MIKI
Application No. 10/819,307
Filed: April 7, 2004
For: SHARED/EXCLUSIVE CONTROL SCHEME AMONG SITES INCLUDING STORAGE DEVICE SYSTEM SHARED BY PLURAL HIGH-RANK APPARATUSES, AND COMPUTER SYSTEM EQUIPPED WITH THE SAME CONTROL SCHEME

DECISION ON PETITION
TO MAKE SPECIAL
(ACCELERATED EXAMINATION)
UNDER M.P.E.P. §708.02 (VIII)

This is a decision on the Request for Reconsideration filed April 25, 2005 (Supplemented June 17, 2005) on the petition to make special under 37 C.F.R. §102(d) and M.P.E.P. §708.02(VIII): Accelerated Examination, originally filed on December 29, 2004, and dismissed on April 4, 2005.

The Petition is **GRANTED**.

M.P.E.P. §708.02, Section VIII which sets out the prerequisites for a grantable petition for Accelerated Examination under 37 C.F.R. §1.102(d) states in relevant part:

A new application (one which has not received any examination by the examiner) may be granted special status provided that applicant (and this term includes applicant's attorney or agent) complies with each of the following items:

(a) Submits a petition to make special accompanied by the fee set forth in 37 CFR 1.17(h);

(b) Presents all claims directed to a single invention, or if the Office determines that all the claims presented are not obviously directed to a single invention, will make an election without traverse as a prerequisite to the grant of special status;

(c) Submits a statement(s) that a pre-examination search was made, listing the field of search by class and subclass, publication, Chemical Abstracts, foreign patents, etc. The pre-examination search must be directed to the invention as claimed in the application for which special status is requested. A search made by a foreign patent office satisfies this requirement;

(d) Submits one copy each of the references deemed most closely related to the subject matter encompassed by the claims if said references are not already of record; and

(e) Submits a detailed discussion of the references, which discussion points out, with the particularity required by 37 CFR 1.111 (b) and (c), how the claimed subject matter is patentable over the references.

Petition to Make Special **GRANTED** since all of the requirements for special status under MPEP § 708.02(VIII) have been met.

The application file is being forwarded to the Examiner for accelerated examination in accordance with M.P.E.P. §708.02, Section VIII. If the application is subsequently allowed, it will be given priority for printing. See M.P.E.P. §1309.

Brian L. Johnson
Special Program Examiner
Technology Center 2100
Computer Architecture, Software and Information Security
571-272-3595

UNITED STATES PATENT AND TRADEMARK OFFICE

Commissioner for Patents
United States Patent and Trademark Office
P.O. Box 1450
Alexandria, VA 22313-1450
www.uspto.gov

LERNER GREENBERG STEMER LLP
P O BOX 2480
HOLLYWOOD FL 33022-2480

MAILED

JUN 26 2009

OFFICE OF PETITIONS

In re Application of	:	
Anton Rodi	:	DECISION ON PETITION
Application No. 10/819,324	:	TO WITHDRAW
Filed: April 6, 2004	:	FROM RECORD
Attorney Docket No. AR-R18	:	

This is a decision on the request to withdraw as attorney of record under 37 C.F.R. § 1.36, filed May 15, 2009.

The request is **NOT APPROVED**.

The Request for Withdrawal as Attorney or Agent and Change of Correspondence Address submitted on May 15, 2009 is hereby not accepted. Petitioner has not complied with current USPTO requirements, as set forth in 37 CFR 10.40 concerning Request for Withdrawal as Attorney and Change of Correspondence Address. Specifically, pursuant to 37 CFR 10.40, the Office will require the practitioner(s) to certify that he, she or they have:

> (1) given reasonable notice to the client, prior to the expiration of the reply period, that the practitioner(s) intends to withdraw from employment;
>
> (2) delivered to the client or a duly authorized representative of the client all papers and property (including funds) to which the client is entitled; and
>
> (3) notified the client of any replies that may be due and the time frame within which the client must respond.

Petitioner has not complied with item (1) of the above certifications.

All future communications from the Office will continue to be directed to the above-listed address until properly notified. Additionally, the address given on the petition differs from the address of record. A courtesy copy of this decision is being mailed to the address given on the petition; however, the Office will mail all future correspondence solely to the address of record.

Currently, the Board of Patent Appeals and Interferences has issued a decision on the above-identified application on March 18, 2009, which required a reply by May 18, 2009.

Telephone inquires concerning this decision should be directed to Joan Olszewski at 571-272-7751.

/Liana Walsh/
Liana Walsh
Petitions Examiner
Office of Petitions

cc: Laurence A. Greenberg
P.O. Box 2580
Hollywood, FL 33020

UNITED STATES PATENT AND TRADEMARK OFFICE

UNITED STATES DEPARTMENT OF COMMERCE
United States Patent and Trademark Office
Address: COMMISSIONER FOR PATENTS
P.O. Box 1450
Alexandria, Virginia 22313-1450
www.uspto.gov

KLARQUIST SPARKMAN, LLP
121 S.W. SALMON STREET
PORTLAND, OR 97204

Mail Date: 04/20/2010

Applicant	: Robert W. Erb	: DECISION ON REQUEST FOR
Patent Number	: 7576298	: RECALCULATION of PATENT
Issue Date	: 08/18/2009	: TERM ADJUSTMENT IN VIEW
Appliction No	: 10/819,335	: OF WYETH AND NOTICE OF INTENT TO
Filed	: 04/05/2004	: ISSUE CERTIFICATE OF CORRECTION
		:

The Request for Recalculation is **GRANTED** to the extent indicated.

The patent term adjustment has been determined to be **492** days. The USPTO will *sua sponte* issue a certificate of correction reflecting the amount of PTA days determined by the recalculation.

Prior to the issuance of the certificate of correction, the USPTO will afford patentee an opportunity to be heard and request reconsideration. Accordingly, patentee has **one month or thirty (30) days**, whichever is longer, to file a request for reconsideration of this patent term adjustment calculation. See 35 U.S.C. 154(b)(3)(B)(ii) and 37 CFR 1.322(a)(4). No extensions of time will be granted under 37 CFR 1.136.

Patentee should use document code PET.OP if electronically filing a request for reconsideration of this patent term adjustment calculation. The patentee must also include the information required by 37 CFR 1.705(b)(2) and the fee required by 37 CFR 1.18(e). If patentee does not file a timely request for reconsideration of this patent term adjustment calculation including the information required by 37 CFR 1.705(b)(2) and the fee required by 37 CFR 1.18(e), the USPTO will issue a certificate of correction reflecting the PTA determination noted above.

Patentee should be aware that in order to preserve the right to review in the United States District Court for the District of Columbia of the USPTO patent term adjustment determination, patentee must ensure that he or she also take the steps required under 35 U.S.C. 154(b)(4)(A) in a timely manner. Nothing in the request for recalculation should be construed as providing an alternative time frame for commencing a civil action under 35 U.S.C. 154(b)(4)(A).

Any questions concerning this decision should be directed to the Office of Patent Legal Administration at 571-272-7702.

UNITED STATES PATENT AND TRADEMARK OFFICE

UNITED STATES DEPARTMENT OF COMMERCE
United States Patent and Trademark Office
Address: COMMISSIONER FOR PATENTS
P.O. Box 1450
Alexandria, Virginia 22313-1450
www.uspto.gov

KNOBBE MARTENS OLSON & BEAR LLP
2040 MAIN STREET
FOURTEENTH FLOOR
IRVINE, CA 92614

Mail Date: 04/20/2010

Applicant	: Eugene M. Tuccinardi	: DECISION ON REQUEST FOR
Patent Number	: 7597393	: RECALCULATION of PATENT
Issue Date	: 10/06/2009	: TERM ADJUSTMENT IN VIEW
Appliction No	: 10/819,341	: OF WYETH AND NOTICE OF INTENT TO
Filed	: 04/05/2004	: ISSUE CERTIFICATE OF CORRECTION
		:

The Request for Recalculation is **GRANTED** to the extent indicated.

The patent term adjustment has been determined to be **1155** days. The USPTO will *sua sponte* issue a certificate of correction reflecting the amount of PTA days determined by the recalculation.

Prior to the issuance of the certificate of correction, the USPTO will afford patentee an opportunity to be heard and request reconsideration. Accordingly, patentee has **one month or thirty (30) days**, whichever is longer, to file a request for reconsideration of this patent term adjustment calculation. See 35 U.S.C. 154(b)(3)(B)(ii) and 37 CFR 1.322(a)(4). No extensions of time will be granted under 37 CFR 1.136.

Patentee should use document code PET.OP if electronically filing a request for reconsideration of this patent term adjustment calculation. The patentee must also include the information required by 37 CFR 1.705(b)(2) and the fee required by 37 CFR 1.18(e). If patentee does not file a timely request for reconsideration of this patent term adjustment calculation including the information required by 37 CFR 1.705(b)(2) and the fee required by 37 CFR 1.18(e), the USPTO will issue a certificate of correction reflecting the PTA determination noted above.

Patentee should be aware that in order to preserve the right to review in the United States District Court for the District of Columbia of the USPTO patent term adjustment determination, patentee must ensure that he or she also take the steps required under 35 U.S.C. 154(b)(4)(A) in a timely manner. Nothing in the request for recalculation should be construed as providing an alternative time frame for commencing a civil action under 35 U.S.C. 154(b)(4)(A).

Any questions concerning this decision should be directed to the Office of Patent Legal Administration at 571-272-7702.

UNITED STATES PATENT AND TRADEMARK OFFICE

Commissioner for Patents
United States Patent and Trademark Office
P.O. Box 1450
Alexandria, VA 22313-1450
www.uspto.gov

SPRINT NEXTEL CORPORATION
6391 SPRINT PARKWAY
MILSTOP: KSOPHTO101-Z211
OVERLAND PARK KS 66251-2100

COPY MAILED

JAN 10 2008

OFFICE OF PETITIONS

In re Application of	:	
David Zufall	:	
Application No. 10/819,347	:	DECISION ON PETITION
Filed: April 7, 2004	:	UNDER 37 CFR 1.137(b)
Attorney Docket No. 100773.53259US	:	

This is a decision on the petition, filed August 7, 2007, which is being treated as a petition under 37 CFR 1.137(b) to revive the instant nonprovisional application for failure to timely notify the U.S. Patent and Trademark (USPTO) of the filing of an application in a foreign country, or under a multinational treaty that requires publication of applications eighteen months after filing. *See* 37 CFR 1.137(f).

The petition is **GRANTED**.

Petitioner states that the instant nonprovisional application is the subject of an application filed in an eighteen-month publication country on April 7, 2005. However, the USPTO was unintentionally not notified of this filing within 45 days subsequent to the filing of the subject application in an eighteen-month publication country.

In view of the above, this application became abandoned pursuant to 35 U.S.C. § 122(b)(2)(B)(iii) and 37 CFR 1.213(c) for failure to timely notify the Office of the filing of an application in a foreign country or under a multilateral international agreement that requires publication of applications 18 months after filing.

A petition to revive an application abandoned pursuant to 35 U.S.C. 122(b)(2)(B)(iii) for failure to notify the USPTO of a foreign filing must be accompanied by:

(1) the required reply which is met by the notification of such filing in a foreign country or under a multinational treaty;
(2) the petition fee as set forth in 37 CFR 1.17(m); and
(3) a statement that the entire delay in filing the required reply from the due date of the reply until the filing of a grantable petition was unintentional.

The instant petition has been found to be in compliance with 37 CFR 1.137(b). Accordingly, the failure to timely notify the USPTO of a foreign or international filing within 45 days after the date of filing of

such foreign or international application as provided by 35 U.S.C. § 122(b)(2)(B)(iii) and 37 CFR 1.213(c) is accepted as having been unintentionally delayed.

The previous Request and Certification under 35 U.S.C. § 122(b)(2)(B)(i) has been rescinded. A Notice Regarding Rescission of Nonpublication Request which sets forth the projected publication date of April 17, 2008 accompanies this decision on petition.

The file does not indicate a change of address has been submitted, although the address given on the petition differs from the address of record. If appropriate, a change of address should be filed in accordance with MPEP 601.03. A courtesy copy of this decision is being mailed to the address given on the petition; however, the Office will mail all future correspondence solely to the address of record.

Telephone inquiries concerning this decision should be directed to the undersigned at (571) 272-3208.

This application is being referred to Technology Center Art Unit 2618 for the mailing of the Final Rejection on November 3, 2007.

Karen Creasy

Karen Creasy
Petitions Examiner
Office of Petitions

cc:
STEPHEN W. PALAN
CROWELL & MORING, LLP
1001 PENNSYLVANIA AVENUE, N.W.
WASHINGTON DC 20004-2595

ATTACHMENT: Notice Regarding Rescission of Nonpublication Request

UNITED STATES PATENT AND TRADEMARK OFFICE

UNITED STATES DEPARTMENT OF COMMERCE
United States Patent and Trademark Office
Address: COMMISSIONER FOR PATENTS
P.O. Box 1450
Alexandria, Virginia 22313-1450
www.uspto.gov

APPLICATION NUMBER	FILING OR 371(C) DATE	FIRST NAMED APPLICANT	ATTY. DOCKET NO./TITLE
10/819,347	04/07/2004	David Zufall	100773.53259US

CONFIRMATION NO. 5147

57541
SPRINT NEXTEL CORPORATION
6391 SPRINT PARKWAY
MAILSTOP: KSOPHT0101-Z2100
OVERLAND PARK, KS 66251-2100

NONPUBLICATION RESCISSION LETTER

OC000000027634621

Date Mailed: 01/10/2008

Communication Regarding Rescission Of Nonpublication Request and/or Notice of Foreign Filing

Applicant's rescission of the previously-filed nonpublication request and/or notice of foreign filing is acknowledged. The paper has been reflected in the Patent and Trademark Office's (USPTO's) computer records so that the earliest possible projected publication date can be assigned.

The projected publication date is 04/17/2008.

If applicant rescinded the nonpublication request before or on the date of "foreign filing,"[1] then no notice of foreign filing is required.

If applicant foreign filed the application after filing the above application and before filing the rescission, and the rescission did not also include a notice of foreign filing, then a notice of foreign filing (not merely a rescission) is required to be filed within 45 days of the date of foreign filing. See 35 U.S.C. § 122(b)(2)(B)(iii), and Clarification of the United States Patent and Trademark Office's Interpretation of the Provisions of 35 U.S.C. § 122(b)(2)(B)(ii)-(iv), 1272 Off. Gaz. Pat. Office 22 (July 1, 2003).

If a notice of foreign filing is required and is not filed within 45 days of the date of foreign filing, then the application becomes abandoned pursuant to 35 U.S.C. § 122(b)(2)(B)(iii). In this situation, applicant should either file a petition to revive or notify the Office that the application is abandoned. See 37 CFR 1.137(f). Any such petition to revive will be forwarded to the Office of Petitions for a decision. Note that the filing of the petition will not operate to stay any period of reply that may be running against the application.

Questions regarding petitions to revive should be directed to the Office of Petitions at (571) 272-3282. Questions regarding publications of patent applications should be directed to the patent application publication hotline at (703) 605-4283 or by e-mail pgpub@uspto.gov.

[1] Note, for purpose of this notice, that "foreign filing" means "filing an application directed to the same invention in another country, or under a multilateral international agreement, that requires publication of applications 18 months after filing".

UNITED STATES PATENT AND TRADEMARK OFFICE

Commissioner for Patents
United States Patent and Trademark Office
P.O. Box 1450
Alexandria, VA 22313-1450
www.uspto.gov

MAILED

MAR 12 2010

OFFICE OF PETITIONS

SANDRA LYNCH-BASS
811 HIGHPOINT DR
PORT ORANGE FL 32127

In re Patent No. 6,926,136
Issue Date: August 9, 2005 :
Application No. 10/819,361 : DECISION ON PETITION
Filed: April 7, 2004 :

This is a decision on the petition to reinstate an expired patent under 37 CFR 1.378(c), filed October 16, 2009.

The petition under 37 CFR 1.378(c) is **GRANTED**.

The above-identified patent issued August 9, 2005. Accordingly, the first maintenance fee could have been paid during the period from August 9, 2008 through February 9, 2009 without surcharge, or with a late payment surcharge during the period from February 10, 2009 through August 9, 2009. No maintenance fee having been received, the patent expired on August 10, 2009.

Since the instant petition was filed within twenty-four months after the six-month grace period provided in 37 CFR 1.362(e), the petition was timely filed under the provisions of 37 CFR 1.378(c). The maintenance fee in this case is accepted and the above-identified patent is hereby reinstated as of the mail date of this decision.

Telephone inquiries specific to this decision may be directed to the undersigned at (571)272-3207.

Cliff Congo
Petitions Attorney
Office of Petitions

UNITED STATES PATENT AND TRADEMARK OFFICE

Commissioner for Patents
United States Patent and Trademark Office
P.O. Box 1450
Alexandria, VA 22313-1450
www.uspto.gov
DIW Mar-06

MARGER JOHNSON & MCCOLLOM, P.C.
210 SW MORRISON STREET, SUITE 400
PORTLAND OR 97204

COPY MAILED

MAR 0 8 2006

OFFICE OF PETITIONS

In re Application of	:	
June Lee	:	DECISION ON PETITIONS
Application No. 10/819,385	:	UNDER 37 CFR 1.78(a)(3),
Filed: 5 April, 2004	:	37 CFR 1.78(a)(6), and
Atty Docket No. 4591-388	:	37 CFR 1.55(c)

This is a decision on the paper filed on 10 August, 2005, which is treated as petitions under 37 CFR §§ 1.78(a)(3), 1.78(a)(6), and 1.55(c) to accept an unintentionally delayed claim under 35 U.S.C. §§ 120, 119(a)-(d), and 119(e) for the benefit of the prior-filed applications set forth in the concurrently filed amendment.

The petitions are **dismissed**.

A petition for acceptance of a claim for late priority under 37 CFR §§ 1.78(a)(3) and 1.78(a)(6) is only applicable to those applications filed on or after November 29, 2000. Further, the petition is appropriate only after the expiration of the period specified in 37 CFR §§ 1.78(a)(2)(ii) and 1.78(a)(5)(ii). In addition, the petition under 37 CFR §§ 1.78(a)(3) and 1.78(a)(6) must be accompanied by:

(1) the reference required by 35 U.S.C. §§ 120 and 119(e) and 37 CFR §§ 1.78(a)(2)(i) and 1.78(a)(5)(i) of the prior-filed application, unless previously submitted;
(2) the surcharge set forth in § 1.17(t); and
(3) a statement that the entire delay between the date the claim was due under 37 CFR §§ 1.78(a)(2)(ii) and 1.78(a)(5)(ii) and the date the claim was filed was unintentional. The Commissioner may require additional where there is a question whether the delay was unintentional.

The instant nonprovisional application was filed after November 29, 2000, and the claim herein for the benefit of priority to the prior-filed applications is submitted after expiration of the period specified in 37 CFR §§ 1.78(a)(2)(ii) and 1.78(a)(5)(ii). Therefore, this is a proper petition under 37 CFR §§ 1.78(a)(3) and 1.78(a)(6).

The instant nonprovisional application was pending at the time of filing of the reference to the prior-filed provisional application as required by 37 CFR 1.78(a)(5)(ii). Additionally, intermediate nonprovisional Application No. 10/222,573 was filed within twelve months of the filing date of the prior-filed provisional application, Application No. 60/315,536, which was filed on 28 August, 2001, for which priority is claimed.

The petition complies with the requirements for a grantable petition under 37 CFR §§ 1.78(a)(3) and 1.78(a)(6) in that (1) a reference to the above-noted applications has been included in an amendment to the first sentence of the specification following the title, as provided by 37 CFR §§ 1.78(a)(2)(iii) and 1.78(a)(5)(iii); (2) the surcharge fee required by 37 CFR 1.17(t) has been submitted; and (3) the petition contains an adequate statement of unintentional delay. However, as a proper claim for foreign priority in accordance with 37 CFR 1.55(c) has not been provided, the petition cannot be granted.

A petition under 37 CFR 1.55(c) to accept an unintentionally delayed claim for priority requires:

(1) The nonprovisional application claiming the benefit of an earlier filing date must be filed on or after November 29, 2000;

(2) the claim submitted with the petition must identify the prior foreign application for which priority is claimed, as well as any foreign application for the same subject matter and having a filing date before that of the application for which priority is claimed, by the application number, country, and the filing date **and be included either in an oath or declaration (37 CFR 1.63(c)(2)) or in an Application Data Sheet (37 CFR 1.76(b)(6);**

(3) the surcharge as set forth in 37 CFR 1.17(t);

(4) a statement that the entire delay between the date the claim was due under 37 CFR 1.55(a)(1) and the date the claim was filed was unintentional. (The Commissioner may require additional information where there is a question whether the delay was unintentional); and

(5) the above-identified nonprovisional application must be filed within 12 months of the filing date of the foreign application.

The instant petition fails to comply with item (2) above. In this regard, a review of the file record fails to disclose that the priority information was included in an oath or declaration or in an Application Data Sheet in accordance with 37 CFR 1.76(b)(6). Unless provided in an application data sheet, 37 CFR 1.63(c)(2) requires that the oath or declaration must identify the foreign application for patent or inventor's certificate for which priority is claimed under 37 CFR 1.55, and any foreign applications having a filing date before that of the application on which priority is claimed, by specifying the application number, country, day, month, and year of its filing. *Note* MPEP 201.14, page 200-77 (Rev. 2, May 2004), last paragraph, second column.

In view of the above, compliance with 37 CFR 1.63(c)(2) or 37 CFR 1.76(b)(6) must be satisfied if applicant desires to claim priority to the foreign applications noted in the petition. Any future petition should include a cover letter and be entitled "Renewed Petition under 37 CFR 1.78(a)(3) and (6), and 1.55(c)."

Further correspondence with respect to this matter should be addressed as follows:

By mail: Mail Stop PETITIONS
Commissioner for Patents
Post Office Box 1450
Alexandria, VA 22313-1450

By hand: Customer Service Window
Mail Stop Petitions
Randolph Building
401 Dulany Street
Alexandria, VA 22314

By fax: (571) 273-8300
ATTN: Office of Petitions

Any questions concerning this matter may be directed to Senior Petitions Attorney Douglas I. Wood at (571) 272-3231. All other inquiries concerning either the examination procedures or status of the application should be directed to the Technology Center.

Frances Hicks

Frances M. Hicks
Lead Paralegal
Office of Petitions

UNITED STATES PATENT AND TRADEMARK OFFICE

Commissioner for Patents
United States Patent and Trademark Office
P.O. Box 1450
Alexandria, VA 22313-1450
www.uspto.gov

MARGER JOHNSON & MCCOLLOM, P.C.
210 SW MORRISON STREET, SUITE 400
PORTLAND OR 97204

COPY MAILED

MAR 0 8 2006

OFFICE OF PETITIONS

In re Application of	:	
June Lee	:	DECISION ON PETITIONS
Application No. 10/819,385	:	UNDER 37 CFR 1.78(a)(3),
Filed: 5 April, 2004	:	37 CFR 1.78(a)(6), and
Atty Docket No. 4591-388	:	37 CFR 1.55(c)

This is a decision on the paper filed on 10 August, 2005, which is treated as petitions under 37 CFR §§ 1.78(a)(3), 1.78(a)(6), and 1.55(c) to accept an unintentionally delayed claim under 35 U.S.C. §§ 120, 119(a)-(d), and 119(e) for the benefit of the prior-filed applications set forth in the concurrently filed amendment.

The petitions are **dismissed**.

A petition for acceptance of a claim for late priority under 37 CFR §§ 1.78(a)(3) and 1.78(a)(6) is only applicable to those applications filed on or after November 29, 2000. Further, the petition is appropriate only after the expiration of the period specified in 37 CFR §§ 1.78(a)(2)(ii) and 1.78(a)(5)(ii). In addition, the petition under 37 CFR §§ 1.78(a)(3) and 1.78(a)(6) must be accompanied by:

(1) the reference required by 35 U.S.C. §§ 120 and 119(e) and 37 CFR §§ 1.78(a)(2)(i) and 1.78(a)(5)(i) of the prior-filed application, unless previously submitted;
(2) the surcharge set forth in § 1.17(t); and
(3) a statement that the entire delay between the date the claim was due under 37 CFR §§ 1.78(a)(2)(ii) and 1.78(a)(5)(ii) and the date the claim was filed was unintentional. The Commissioner may require additional where there is a question whether the delay was unintentional.

The instant nonprovisional application was filed after November 29, 2000, and the claim herein for the benefit of priority to the prior-filed applications is submitted after expiration of the period specified in 37 CFR §§ 1.78(a)(2)(ii) and 1.78(a)(5)(ii). Therefore, this is a proper petition under 37 CFR §§ 1.78(a)(3) and 1.78(a)(6).

The instant nonprovisional application was pending at the time of filing of the reference to the prior-filed provisional application as required by 37 CFR 1.78(a)(5)(ii). Additionally, intermediate nonprovisional Application No. 10/222,573 was filed within twelve months of the filing date of the prior-filed provisional application, Application No. 60/315,536, which was filed on 28 August, 2001, for which priority is claimed.

The petition complies with the requirements for a grantable petition under 37 CFR §§ 1.78(a)(3) and 1.78(a)(6) in that (1) a reference to the above-noted applications has been included in an amendment to the first sentence of the specification following the title, as provided by 37 CFR §§ 1.78(a)(2)(iii) and 1.78(a)(5)(iii); (2) the surcharge fee required by 37 CFR 1.17(t) has been submitted; and (3) the petition contains an adequate statement of unintentional delay. However, as a proper claim for foreign priority in accordance with 37 CFR 1.55(c) has not been provided, the petition cannot be granted.

A petition under 37 CFR 1.55(c) to accept an unintentionally delayed claim for priority requires:

(1) The nonprovisional application claiming the benefit of an earlier filing date must be filed on or after November 29, 2000;

(2) the claim submitted with the petition must identify the prior foreign application for which priority is claimed, as well as any foreign application for the same subject matter and having a filing date before that of the application for which priority is claimed, by the application number, country, and the filing date **and be included either in an oath or declaration (37 CFR 1.63(c)(2)) or in an Application Data Sheet (37 CFR 1.76(b)(6);**

(3) the surcharge as set forth in 37 CFR 1.17(t);

(4) a statement that the entire delay between the date the claim was due under 37 CFR 1.55(a)(1) and the date the claim was filed was unintentional. (The Commissioner may require additional information where there is a question whether the delay was unintentional); and

(5) the above-identified nonprovisional application must be filed within 12 months of the filing date of the foreign application.

The instant petition fails to comply with item (2) above. In this regard, a review of the file record fails to disclose that the priority information was included in an oath or declaration or in an Application Data Sheet in accordance with 37 CFR 1.76(b)(6). Unless provided in an application data sheet, 37 CFR 1.63(c)(2) requires that the oath or declaration must identify the foreign application for patent or inventor's certificate for which priority is claimed under 37 CFR 1.55, and any foreign applications having a filing date before that of the application on which priority is claimed, by specifying the application number, country, day, month, and year of its filing. *Note* MPEP 201.14, page 200-77 (Rev. 2, May 2004), last paragraph, second column.

In view of the above, compliance with 37 CFR 1.63(c)(2) or 37 CFR 1.76(b)(6) must be satisfied if applicant desires to claim priority to the foreign applications noted in the petition. Any future petition should include a cover letter and be entitled "Renewed Petition under 37 CFR 1.78(a)(3) and (6), and 1.55(c)."

Further correspondence with respect to this matter should be addressed as follows:

By mail: Mail Stop PETITIONS
Commissioner for Patents
Post Office Box 1450
Alexandria, VA 22313-1450

By hand: Customer Service Window
Mail Stop Petitions
Randolph Building
401 Dulany Street
Alexandria, VA 22314

By fax: (571) 273-8300
ATTN: Office of Petitions

Any questions concerning this matter may be directed to Senior Petitions Attorney Douglas I. Wood at (571) 272-3231. All other inquiries concerning either the examination procedures or status of the application should be directed to the Technology Center.

Frances Hicks

Frances M. Hicks
Lead Paralegal
Office of Petitions

UNITED STATES PATENT AND TRADEMARK OFFICE

Commissioner for Patents
United States Patent and Trademark Office
P.O. Box 1450
Alexandria, VA 22313-1450
www.uspto.gov

MARGER JOHNSON & MCCOLLUM, P.C.
210 SW MORRISON STREET, SUITE 400
PORTLAND OR 97204

COPY MAILED
OCT 17 2006
OFFICE OF PETITIONS

In re Application of	:
June Lee	: DECISION ON PETITIONS
Application No. 10/819,385	: UNDER 37 CFR 1.78(a)(3), AND (a)(6),
Filed: 5 April, 2004	: AND UNDER 37 CFR 1.55(c)
Attorney Docket No. 4591-388	:

This is a decision on the paper filed on 21 June, 2006, which is treated as renewed petitions under 37 CFR §§ 1.78(a)(3), 1.78(a)(6), and 1.55(c) to accept an unintentionally delayed claim under 35 U.S.C. §§120, 119(e), and 119(a)-(d) for the benefit of priority to the prior-filed nonprovisional and provisional applications set forth in the amendment filed on 10 August, 2005, and the foreign applications set forth in the Application Data Sheet (ADS) filed on 3 October, 2006.[1]

The petitions are **GRANTED.**

Petitions Under 37 CFR 1.78(a)(3) and (a)(6).

A petition for acceptance of a claim for late priority under 37 CFR §§ 1.78(a)(3) and 1.78(a)(6) is only applicable to those applications filed on or after November 29, 2000. Further, the petition is appropriate only after the expiration of the period specified in 37 CFR §§ 1.78(a)(2)(ii) and 1.78(a)(5)(ii). In addition, the petition under 37 CFR §§ 1.78(a)(3) and 1.78(a)(6) must be accompanied by:

[1] It is noted that the ADS does not set forth the relationship of this application to Application No. 10/222,573, and is therefore improper. A supplemental ADS should be submitted which properly sets forth the relationship of this application to Application No. 10/222,273.

(1) the reference required by 35 U.S.C. §§ 120 and 119(e) and 37 CFR §§ 1.78(a)(2)(i) and 1.78(a)(5)(i) of the prior-filed application, unless previously submitted;
(2) the surcharge set forth in § 1.17(t); and
(3) a statement that the entire delay between the date the claim was due under 37 CFR §§ 1.78(a)(2)(ii) and 1.78(a)(5)(ii) and the date the claim was filed was unintentional. The Director may require additional where there is a question whether the delay was unintentional.

Additionally, the instant nonprovisional application must be pending at the time of filing of the reference to the prior-filed provisional application(s) as required by 37 CFR 1.78(a)(5)(ii). Further, the nonprovisional application(s) claiming the benefit of the prior-filed provisional application(s) must have been filed within twelve months of the filing date of the prior-filed provisional application(s).

All of the above requirements having been satisfied, the late claim for benefit of priority to the prior-filed applications under 35 U.S.C. §§ 120 and 119(e) is accepted as being unintentionally delayed.

The granting of the petition to accept the delayed benefit claim to the prior-filed applications under 37 CFR §§ 1.78(a)(3) and 1.78(a)(6) should not be construed as meaning that this application is entitled to the benefit of the filing date of the prior-filed applications. In order for this application to be entitled to the benefit of the prior-filed applications, all other requirements under 35 U.S.C. §§120 and 1.78(a)(1) and (a)(2) and under 35 U.S.C. §119(e) and 37 CFR 1.78(a)(4) and (a)(5) must be met. Similarly, the fact that the corrected Filing Receipt accompanying this decision on petition includes the prior-filed applications should not be construed as meaning that applicant is entitled to the claim for benefit of priority to the prior-filed applications noted thereon. Accordingly, the examiner will, in due course, consider this benefit claim and determine whether the application is entitled to the benefit of the earlier filing date.

Petition Under 37 CFR 1.55(c).

This pending nonprovisional application was filed after November 29, 2000, and did not include a reference to the foreign applications, for which benefit is now sought, within the later of four months from the actual filing date of the application or sixteen months from the filing date of the prior foreign application. Since the claim for priority is submitted after the period specified in 37 CFR 1.55(a)(1)(i), this is an appropriate petition under the provisions of 37 CFR 1.55(c).

A petition under 37 CFR 1.55(c) to accept an unintentionally delayed claim for priority requires:

(1) The nonprovisional application claiming the benefit of an earlier filing date must be filed on or after November 29, 2000;

(2) the claim submitted with the petition must identify the prior foreign application for which priority is claimed, as well as any foreign

application for the same subject matter and having a filing date before that of the application for which priority is claimed, by the application number, country, and the filing date and be included either in an oath or declaration (37 CFR 1.63(c)(2)) or in an Application Data Sheet (37 CFR 1.76(b)(6);

(3) the surcharge as set forth in 37 CFR 1.17(t);

(4) a statement that the entire delay between the date the claim was due under 37 CFR 1.55(a)(1) and the date the claim was filed was unintentional (the Director may require additional information where there is a question whether the delay was unintentional); and

(5) the above-identified nonprovisional application must be filed within 12 months of the filing date of the foreign application.

This application was filed on 5 April, 2004, which is after November 29, 2000, and which was filed within 12 months of 18 April, 2003 (the filing date of foreign Korean application No. 2003-24812 to which benefit is now being claimed). Additionally, the instant nonprovisional application claims benefit to intermediate nonprovisional Application No. 10/222,573, filed on 15 August, 2002, which was filed within 12 months of 21 December, 2001 (the filing date of foreign Korean application No. 2001-82417 to which benefit is now being claimed). On 3 October, 2006, an Application Data Sheet was received which identifies the foreign applications for which priority is claimed by application number, country and filing date. The required petition fee of $1,370.00 was received with the petition filed on 10 August, 2005. Lastly, petitioner has provided an adequate statement of unintentional delay.

All of the above requirements having been satisfied, the late claim for priority under 35 U.S.C. § 119(a)-(d) is accepted as being unintentionally delayed.

The granting of the petition to accept the delayed benefit claim to the prior-filed applications under 37 CFR 1.55(c) should not be construed as meaning that this application is entitled to the benefit of the prior-filed applications. In order for this application to be entitled to the benefit of the prior-filed applications, all other requirements under 35 U.S.C. § 119(a)-(d) and 37 CFR 1.55(a)(1) must be met. Similarly, the fact that the corrected Filing Receipt accompanying this decision on petition includes the prior-filed applications should not be construed as meaning that applicant is entitled to the claim for benefit of priority to the prior-filed applications noted thereon. Accordingly, the examiner will, in due course, consider this benefit claim and determine whether this application is entitled to the benefit of the earlier filing date.

A corrected Filing Receipt, which includes the priority claim to the prior-filed applications, accompanies this decision on petition.

Any questions concerning this matter may be directed to Senior Petitions Attorney Douglas I. Wood at (571) 272-3231. All other inquiries concerning either the examination procedures or status of the application should be directed to the Technology Center.

This application is being referred to Technology Center Art Unit 2827 for consideration by the examiner of the claim for benefit of priority under 35 U.S.C. §§120 and 119(e) to the prior-filed nonprovisional and provisional applications, and under §119(a)-(d) to the prior-filed foreign applications.

Frances Hicks
Lead Paralegal
Office of Petitions

ATTACHMENT : Corrected Filing Receipt

UNITED STATES PATENT AND TRADEMARK OFFICE

UNITED STATES DEPARTMENT OF COMMERCE
United States Patent and Trademark Office
Address: COMMISSIONER FOR PATENTS
P.O. Box 1450
Alexandria, Virginia 22313-1450
www.uspto.gov

APPL NO.	FILING OR 371 (c) DATE	ART UNIT	FIL FEE REC'D	ATTY.DOCKET NO	DRAWINGS	TOT CLMS	IND CLMS
10/819,385	04/05/2004	2827	770	4591-388	8	18	3

CONFIRMATION NO. 5455

CORRECTED FILING RECEIPT

OC000000020684868

20575
MARGER JOHNSON & MCCOLLOM, P.C.
210 SW MORRISON STREET, SUITE 400
PORTLAND, OR 97204

Date Mailed: 10/03/2006

Receipt is acknowledged of this regular Patent Application. It will be considered in its order and you will be notified as to the results of the examination. Be sure to provide the U.S. APPLICATION NUMBER, FILING DATE, NAME OF APPLICANT, and TITLE OF INVENTION when inquiring about this application. Fees transmitted by check or draft are subject to collection. Please verify the accuracy of the data presented on this receipt. **If an error is noted on this Filing Receipt, please mail to the Commissioner for Patents P.O. Box 1450 Alexandria Va 22313-1450. Please provide a copy of this Filing Receipt with the changes noted thereon. If you received a "Notice to File Missing Parts" for this application, please submit any corrections to this Filing Receipt with your reply to the Notice. When the USPTO processes the reply to the Notice, the USPTO will generate another Filing Receipt incorporating the requested corrections (if appropriate).**

Applicant(s)

June Lee, Seoul, KOREA, REPUBLIC OF;

Power of Attorney:

Elmer Galbi--19761
Jerome Marger--26480
Alan McCollom--28881
Alexander Johnson Jr--29396
Stephen Ford--35139
Julie Reed--35349
Scott Schaffer--38610
Joseph Makuch--39286
James Harris--40013
Kevin Ross--42116

Domestic Priority data as claimed by applicant

This application is a CIP of 10/222,573 08/15/2002 PAT 6,731,540
which claims benefit of 60/315,536 08/28/2001

Foreign Applications

REPUBLIC OF KOREA 2003-24812 04/18/2003
REPUBLIC OF KOREA 2001-82417 12/21/2001

If Required, Foreign Filing License Granted: 06/22/2004

The country code and number of your priority application, to be used for filing abroad under the Paris Convention, is
US10/819,385

Projected Publication Date: Not Applicable

Non-Publication Request: No

Early Publication Request: No

Title

FLASH MEMORY DEVICE CAPABLE OF PREVENTING PROGRAM DISTURBANCE ACCORDING TO PARTIAL PROGRAMMING

Preliminary Class

365

PROTECTING YOUR INVENTION OUTSIDE THE UNITED STATES

Since the rights granted by a U.S. patent extend only throughout the territory of the United States and have no effect in a foreign country, an inventor who wishes patent protection in another country must apply for a patent in a specific country or in regional patent offices. Applicants may wish to consider the filing of an international application under the Patent Cooperation Treaty (PCT). An international (PCT) application generally has the same effect as a regular national patent application in each PCT-member country. The PCT process **simplifies** the filing of patent applications on the same invention in member countries, but **does not result** in a grant of "an international patent" and does not eliminate the need of applicants to file additional documents and fees in countries where patent protection is desired.

Almost every country has its own patent law, and a person desiring a patent in a particular country must make an application for patent in that country in accordance with its particular laws. Since the laws of many countries differ in various respects from the patent law of the United States, applicants are advised to seek guidance from specific foreign countries to ensure that patent rights are not lost prematurely.

Applicants also are advised that in the case of inventions made in the United States, the Director of the USPTO must issue a license before applicants can apply for a patent in a foreign country. The filing of a U.S. patent application serves as a request for a foreign filing license. The application's filing receipt contains further information and guidance as to the status of applicant's license for foreign filing.

Applicants may wish to consult the USPTO booklet, "General Information Concerning Patents" (specifically, the section entitled "Treaties and Foreign Patents") for more information on timeframes and deadlines for filing foreign patent applications. The guide is available either by contacting the USPTO Contact Center at 800-786-9199, or it can be viewed on the USPTO website at http://www.uspto.gov/web/offices/pac/doc/general/index.html.

For information on preventing theft of your intellectual property (patents, trademarks and copyrights), you may wish to consult the U.S. Government website, http://www.stopfakes.gov. Part of a Department of Commerce initiative, this website includes self-help "toolkits" giving innovators guidance on how to protect intellectual property in specific countries such as China, Korea and Mexico. For questions regarding patent enforcement issues, applicants may call the U.S. Government hotline at 1-866-999-HALT (1-866-999-4158).

LICENSE FOR FOREIGN FILING UNDER
Title 35, United States Code, Section 184
Title 37, Code of Federal Regulations, 5.11 & 5.15

GRANTED

The applicant has been granted a license under 35 U.S.C. 184, if the phrase "IF REQUIRED, FOREIGN FILING LICENSE GRANTED" followed by a date appears on this form. Such licenses are issued in all applications where the conditions for issuance of a license have been met, regardless of whether or not a license may be required as set forth in 37 CFR 5.15. The scope and limitations of this license are set forth in 37 CFR 5.15(a) unless an earlier license has been issued under 37 CFR 5.15 (b). The license is subject to revocation upon written notification. The date indicated is the effective date of the license, unless an earlier license of similar scope has been granted under 37 CFR 5.13 or 5.14.

This license is to be retained by the licensee and may be used at any time on or after the effective date thereof unless it is revoked. This license is automatically transferred to any related applications(s) filed under 37 CFR 1.53(d). This license is not retroactive.

The grant of a license does not in any way lessen the responsibility of a licensee for the security of the subject matter as imposed by any Government contract or the provisions of existing laws relating to espionage and the national security or the export of technical data. Licensees should apprise themselves of current regulations especially with respect to certain countries, of other agencies, particularly the Office of Defense Trade Controls, Department of State (with respect to Arms, Munitions and Implements

of War (22 CFR 121-128)); the Bureau of Industry and Security, Department of Commerce (15 CFR parts 730-774); the Office of Foreign Assets Control, Department of Treasury (31 CFR Parts 500+) and the Department of Energy.

NOT GRANTED

No license under 35 U.S.C. 184 has been granted at this time, if the phrase "IF REQUIRED, FOREIGN FILING LICENSE GRANTED" DOES NOT appear on this form. Applicant may still petition for a license under 37 CFR 5.12, if a license is desired before the expiration of 6 months from the filing date of the application. If 6 months has lapsed from the filing date of this application and the licensee has not received any indication of a secrecy order under 35 U.S.C. 181, the licensee may foreign file the application pursuant to 37 CFR 5.15(b).

UNITED STATES PATENT AND TRADEMARK OFFICE

UNITED STATES DEPARTMENT OF COMMERCE
United States Patent and Trademark Office
Address: COMMISSIONER FOR PATENTS
P.O. Box 1450
Alexandria, Virginia 22313-1450
www.uspto.gov

EDWARDS ANGELL PALMER & DODGE LLP
P.O. BOX 55874
BOSTON, MA 02205

Mail Date: 04/21/2010

Applicant	: Sang Yup Lee	: DECISION ON REQUEST FOR
Patent Number	: 7595156	: RECALCULATION of PATENT
Issue Date	: 09/29/2009	: TERM ADJUSTMENT IN VIEW
Appliction No	: 10/819,386	: OF WYETH AND NOTICE OF INTENT TO
Filed	: 04/06/2004	: ISSUE CERTIFICATE OF CORRECTION
		:

The Request for Recalculation is **GRANTED** to the extent indicated.

The patent term adjustment has been determined to be **1132** days. The USPTO will *sua sponte* issue a certificate of correction reflecting the amount of PTA days determined by the recalculation.

Prior to the issuance of the certificate of correction, the USPTO will afford patentee an opportunity to be heard and request reconsideration. Accordingly, patentee has **one month or thirty (30) days**, whichever is longer, to file a request for reconsideration of this patent term adjustment calculation. See 35 U.S.C. 154(b)(3)(B)(ii) and 37 CFR 1.322(a)(4). No extensions of time will be granted under 37 CFR 1.136.

Patentee should use document code PET.OP if electronically filing a request for reconsideration of this patent term adjustment calculation. The patentee must also include the information required by 37 CFR 1.705(b)(2) and the fee required by 37 CFR 1.18(e). If patentee does not file a timely request for reconsideration of this patent term adjustment calculation including the information required by 37 CFR 1.705(b)(2) and the fee required by 37 CFR 1.18(e), the USPTO will issue a certificate of correction reflecting the PTA determination noted above.

Patentee should be aware that in order to preserve the right to review in the United States District Court for the District of Columbia of the USPTO patent term adjustment determination, patentee must ensure that he or she also take the steps required under 35 U.S.C. 154(b)(4)(A) in a timely manner. Nothing in the request for recalculation should be construed as providing an alternative time frame for commencing a civil action under 35 U.S.C. 154(b)(4)(A).

Any questions concerning this decision should be directed to the Office of Patent Legal Administration at 571-272-7702.

UNITED STATES PATENT AND TRADEMARK OFFICE

Commissioner for Patents
United States Patent and Trademark Office
P.O. Box 1450
Alexandria, VA 22313-1450
www.uspto.gov

H. DALE LANGLEY, JR.
THE LAW FIRM OF H. DALE LANGLEY, JR. PC
610 WEST LYNN
AUSTIN, TX 78703

COPY MAILED

MAR 06 2008

OFFICE OF PETITIONS

In re Application of :
Michael J. Holloway, et. al. :
Application No. 10/819,387 : ON PETITION
Filed: April 7, 2004 :
Attorney Docket No. UNIP:003 :

This is a decision on the petition under 37 CFR 1.137(b), filed on September 4, 2007, to revive the above-identified application.

The above application was held abandoned for failure to file a reply to the final Office action mailed November 8, 2006. A Notice of Abandonment was mailed on July 9, 2007.

Office records show that a response to the final Office action was timely submitted on May 8, 2007 and included a three months extension of time, which was within the six months statutory period. However, petitioner transmitted (via EFS-Web) the response and extension of time to the wrong application. As a result, this application became abandoned after midnight February 8, 2007. The instant petition is properly treated under 37 CFR 1.137(b).

The petition satisfies the requirements of 37 CFR 1.137(b), in that, petitioner has supplied (1) the reply in the form of a Request for Continued Examination (RCE) under 37 CFR 1.114, with the $790 filing fee and an amendment; (2) the petition fee of $1,500; and (3) a proper statement of unintentional delay. Therefore, the petition is **GRANTED.**

This application is being revived for consideration of the RCE filed on September 4, 2007.

The application file is being referred to Technology Center Art Unit 2626, for further processing.

Telephone inquiries concerning this decision should be directed to the undersigned at (571) 272-3226.

Andrea Smith
Petitions Examiner
Office of Petitions

UNITED STATES PATENT AND TRADEMARK OFFICE

Commissioner for Patents
United States Patent and Trademark Office
P.O. Box 1450
Alexandria, VA 22313-1450
www.uspto.gov

LIU & LIU
444 S. FLOWER STREET - SUITE 1750
LOS ANGELES, CA 90071

COPY MAILED

MAY 0 5 2006

OFFICE OF PETITIONS

In re Application of	:	
Rodgerson, et. al.	:	DECISION ON REQUEST
Application No. 10/819,398	:	TO WITHDRAW FROM
Filed: April 7, 2004	:	RECORD
Attorney Docket No. 61104-00008	:	

This is a decision on the Request to Withdraw as attorney or agent of record under 37 C.F.R. § 1.36(b), filed by facsimile transmission on September 21, 2005.

The request is **NOT APPROVED** as moot.

A review of the file record indicates that the power of attorney to all the attorneys or agents associated with Customer No. 26588 have been revoked by the assignee of the patent application. Accordingly, the request to withdraw under 37 C.F.R. § 1.36(b) is moot.

There is an outstanding Office action mailed January 30, 2006, that requires a reply from the applicant.

The correspondence address of record has been changed and the new correspondence address is the address indicated below.

Telephone inquires concerning this decision should be directed to Andrea Smith at (571) 272-3226.

Andrea Smith
Petitions Examiner
Office of Petitions

Conferee: David Bucci

cc: MINTZ LEVIN COHN FERRIS GLOVSKY & POPEO
666 THIRD AVENUE
NEW YORK, NY 10017

UNITED STATES PATENT AND TRADEMARK OFFICE

UNITED STATES DEPARTMENT OF COMMERCE
United States Patent and Trademark Office
Address: COMMISSIONER FOR PATENTS
P.O. Box 1450
Alexandria, Virginia 22313-1450
www.uspto.gov

HAYNES AND BOONE, LLP
IP Section
2323 Victory Avenue
Suite 700
Dallas, TX 75219

Mail Date: 04/21/2010

Applicant	: Fahd Pirzada	: DECISION ON REQUEST FOR
Patent Number	: 7606339	: RECALCULATION of PATENT
Issue Date	: 10/20/2009	: TERM ADJUSTMENT IN VIEW
Appliction No	: 10/819,408	: OF WYETH AND NOTICE OF INTENT TO
Filed	: 04/07/2004	: ISSUE CERTIFICATE OF CORRECTION
		:

The Request for Recalculation is **GRANTED** to the extent indicated.

The patent term adjustment has been determined to be **831** days. The USPTO will *sua sponte* issue a certificate of correction reflecting the amount of PTA days determined by the recalculation.

Prior to the issuance of the certificate of correction, the USPTO will afford patentee an opportunity to be heard and request reconsideration. Accordingly, patentee has **one month or thirty (30) days**, whichever is longer, to file a request for reconsideration of this patent term adjustment calculation. See 35 U.S.C. 154(b)(3)(B)(ii) and 37 CFR 1.322(a)(4). No extensions of time will be granted under 37 CFR 1.136.

Patentee should use document code PET.OP if electronically filing a request for reconsideration of this patent term adjustment calculation. The patentee must also include the information required by 37 CFR 1.705(b)(2) and the fee required by 37 CFR 1.18(e). If patentee does not file a timely request for reconsideration of this patent term adjustment calculation including the information required by 37 CFR 1.705(b)(2) and the fee required by 37 CFR 1.18(e), the USPTO will issue a certificate of correction reflecting the PTA determination noted above.

Patentee should be aware that in order to preserve the right to review in the United States District Court for the District of Columbia of the USPTO patent term adjustment determination, patentee must ensure that he or she also take the steps required under 35 U.S.C. 154(b)(4)(A) in a timely manner. Nothing in the request for recalculation should be construed as providing an alternative time frame for commencing a civil action under 35 U.S.C. 154(b)(4)(A).

Any questions concerning this decision should be directed to the Office of Patent Legal Administration at 571-272-7702.

UNITED STATES PATENT AND TRADEMARK OFFICE

UNITED STATES DEPARTMENT OF COMMERCE
United States Patent and Trademark Office
Address: COMMISSIONER FOR PATENTS
P.O. Box 1450
Alexandria, Virginia 22313-1450
www.uspto.gov

HAYNES AND BOONE, LLP
IP Section
2323 Victory Avenue
Suite 700
Dallas, TX 75219

Mail Date: 05/18/2010

Applicant : Fahd Pirzada
Patent Number : 7606339
Issue Date : 10/20/2009
Application No : 10/819,408
Filed : 04/07/2004

: NOTICE CONCERNING IMPROPER
: CALCULATION OF PATENT TERM
: ADJUSTMENT BASED UPON USPTO
: IMPROPERLY MEASURING REDUCTION
: PERIOD UNDER 37 CFR 1.704(c)(10).

The United States Patent and Trademark Office (USPTO) discovered that in processing the recent recalculation decisions mailed in response to patentee's filed Request for Recalculation of Patent Term Adjustment in view of Wyeth, the USPTO improperly measured the reduction period for reductions under 37 CFR 1.704(c)(10). Pursuant to 37 CFR 1.704(c)(10), patentee's reduction begins on the date of filing the amendment under 37 CFR 1.312 ("1.312 amendment") or other related paper and ends on the date that the Office mails a response to the filing of the 1.312 amendment or other paper. It has been discovered that during the recalculation, the calculation failed to the limit the reduction to the mail date of the response to the 1.312 amendment or other paper. Accordingly, patentee's reductions were greater than warranted.

This notice **VACATES** the previous GRANTED request for recalculation and provides patentee with a revised GRANTED recalculation.

The patent term adjustment has been determined to be **870** days. The USPTO will *sua sponte* issue a certificate of correction reflecting the amount of patent term adjustment (PTA) days determined by the recalculation.

Prior to the issuance of the certificate of correction, the USPTO will afford patentee an opportunity to be heard and request reconsideration. Accordingly, patentee has **one month or thirty (30) days** from the mail date of this notice, whichever is longer, to file a request for reconsideration of this PTA calculation. See 35 U.S.C. § 154(b)(3)(B)(ii) and 37 CFR 1.322(a)(4).

Patentee should use document code PET.OP if electronically filing a request for reconsideration of this PTA calculation. The patentee must also include the information required by 37 CFR 1.705(b)(2), and the fee required by 37 CFR 1.18(e). If patentee does not file a timely request for reconsideration of this PTA calculation, including the information required by 37 CFR 1.705(b)(2) and the fee required by 37 CFR 1.18(e), the USPTO will issue a certificate of correction reflecting the PTA determination noted above.

Patentee should be aware that in order to preserve the right of review of the USPTO's PTA determination in the United States District Court for the District of Columbia, patentee must ensure that the steps required under 35 U.S.C. § 154 (b)(4) are taken in a timely manner. Nothing in the request for recalculation should be construed as providing an alternative time frame for commencing a civil action under 35 U.S.C. § 154(b)(4).

UNITED STATES PATENT AND TRADEMARK OFFICE

Commissioner for Patents
United States Patent and Trademark Office
P.O. Box 1450
Alexandria, VA 22313-1450
www.uspto.gov

FOLEY & LARDNER
2029 CENTURY PARK EAST
SUITE 3500
LOS ANGELES CA 90067

COPY MAILED

NOV 17 2004

OFFICE OF PETITIONS

In re Reissue Application No. 10/819,430	:
Filed: April 6, 2004	:
Original Patent No 6,370,344	:DECISION ACCORDING STATUS
Issue Date: April 9, 2002	:UNDER 37 CFR 1.47(a)
Original Application No. 09/511,112	
Filed: February 23, 2000	:
Inventors: Fuji, Kakuda	:
	:

This is a decision on the petition filed August 24, 2004, under 37 CFR 1.47(a) to accord this reissue application status in the absence of the signature of joint inventor Kakuda.

The petition under 37 CFR 1.47(a) to accord this reissue application status is **granted.**

The application and papers have been reviewed and found in compliance with 37 CFR 1.47(a). This application is hereby accorded Rule 1.47(a) status and the Office of Initial Patent Examination is authorized to

(1) accept this application under 37 CFR 1.47(a);

(2) process the application with the inventors being Fuji, Kakuda, using the reissue oath/declaration filed August 24, 2004; and

(3) mail a filing receipt with a filing date of April 6, 2004.

As provided in Rule 1.47(a), this Office will forward notice of this application's filing date to non-signing inventor Kakuda at the address given in the petition. Notice of the filing of this application will also be published in the *Official Gazette.*

Telephone inquiries related to this decision should be directed to the undersigned at (571) 272-3217.

Brian Hearn

Brian Hearn
Petitions Examiner
Office of Petitions
Office of the Deputy Commissioner
for Patent Examination Policy

UNITED STATES PATENT AND TRADEMARK OFFICE

Commissioner for Patents
United States Patent and Trademark Office
P.O. Box 1450
Alexandria, VA 22313-1450
www.uspto.gov

KAREN J GUERRERO
25 ROOSTER HILL RD
PHOENIXVILLE PA 19460

COPY MAILED

DEC 28 2006

OFFICE OF PETITIONS

In re Application of		
Arnold, et al.	:	
Application No. 10/819,434	:	DECISION ON
Filed: April 7, 2004	:	PETITION
Title: Method of Determining the Health of a Battery	:	

This is in response to the petition to revive under 37 CFR 1.137(a), filed November 24, 2006.

The petition under 37 CFR 1.137(a) is **DISMISSED**.

Any request for reconsideration of this decision must be submitted within **TWO (2) MONTHS** from the mail date of this decision. The reconsideration request should include a cover letter entitled "Renewed Petition under 37 CFR 1.137(a)". Extensions of time under 37 CFR 1.136(a) are permitted.

The above-identified application became abandoned for failure to timely file a reply to the non-final Office action mailed January 17, 2006. This Office action set a shortened statutory period for reply of one (1) month. No extensions of time under 37 CFR 1.136(a) were obtained. Accordingly, the above-identified application became abandoned on February 18, 2006. A Notice of Abandonment was mailed on September 20, 2006.

A grantable petition under 37 CFR 1.137(a) must be accompanied by: (1) the reply required to the outstanding Office action or notice, unless previously filed; (2) the petition fee set forth in 37 CFR 1.17(l); (3) a showing to the satisfaction of the Commissioner that the entire delay in filing the required reply from the due date for the reply until the filing of a grantable petition pursuant to this paragraph was unavoidable; and (4) any terminal disclaimer (and fee as set forth in 37 CFR 1.20(d)) required pursuant to 37 CFR 1.137(d). The instant petition lacks item (3).

Decisions on reviving abandoned applications on the basis of "unavoidable" delay have adopted the reasonably prudent person standard in determining if the delay was unavoidable: "The word 'unavoidable' ... is applicable to ordinary human affairs, and requires no more or greater care or diligence than is generally used and observed by prudent and careful men in relation to their most important business."[1]

Moreover, delay resulting from the lack of knowledge or improper application of the patent statutes, rules of practice or the Manual of Patent Examining Procedure, however, does not constitute "unavoidable" delay.[2]

A review of the non-final Office action mailed January 17, 2006 reveals that it was properly mailed to the correspondence address of record at that time. Petitioner has not submitted evidence showing that he timely filed a change of correspondence address or power of attorney with the Office. Nor has petitioner demonstrated that the non-final Office action was not received by the prior attorneys of record. Petitioner merely states that applicants "did not receive correspondence from prior patent counsel regarding the office action and period to respond."

The Patent and Trademark Office must rely on the actions or inactions of duly authorized and voluntarily chosen representatives of the applicant, and applicant is bound by the consequences of those actions or inactions. Link v. Wabash, 370

---

[1] In re Mattulath, 38 App. D.C. 497, 514-15 (1912)(*quoting* Ex parte Pratt, 1887 Dec. Comm'r Pat. 31, 32-33 (1887)); see also Winkler v. Ladd, 221 F. Supp. 550, 552, 138 U.S.P.Q. 666, 167-68 (D.D.C. 1963), aff'd, 143 U.S.P.Q. 172 (D.C. Cir. 1963); Ex parte Henrich, 1913 Dec. Comm'r Pat. 139, 141 (1913).

[2] See Haines, 673 F. Supp. at 317, 5 U.S.P.Q. 2d at 1132; Vincent v. Mossinghoff, 230 U.S.P.Q. 621, 624 (D.D.C. 1985); Smith v. Diamond, 209 U.S.P.Q. 1091 (D.D.C. 1981); Potter v. Dann, 201 U.S.P.Q. 574 (D.D.C. 1978); Ex parte Murray, 1891 Dec. Comm'r Pat. 130, 131 (1891).

U.S. 626, 633-34 (1962). Specifically, petitioner's delay caused by the mistakes or negligence of his voluntarily chosen representative does not constitute unavoidable delay within the meaning of 35 USC 133. Haines v. Quigg, 673 F. Supp. at 317; Smith v. Diamond, 209 USPQ 1091 (D.D.C. 1981); Potter v. Dann, 201 USPQ 574 (D.D.C. 1978); Ex parte Murray, 1891 Dec. Comm'r Pat. 130, 131 (Comm'r Pat. 1891).

Accordingly, the entire period of delay in the above-identified application can not be characterized as "unavoidable".

While the showing of record is not sufficient to establish to the satisfaction of the Commissioner that the delay was unavoidable, petitioner is **not** precluded from obtaining relief by filing a request for reconsideration pursuant to 37 CFR 1.137(b) on the basis of unintentional delay. A grantable petition pursuant to 37 CFR 1.137(b) must be accompanied by (1) The reply required to the outstanding Office action or notice, unless previously filed; (2) The petition fee as set forth in 37 CFR 1.17(m); (3) A statement that the entire delay in filing the required reply from the due date for the reply until the filing of a grantable petition pursuant to this paragraph was unintentional. The Commissioner may require additional information where there is a question whether the delay was unintentional; and (4) Any terminal disclaimer (and fee as set forth in 37 CFR 1.20(d)) required pursuant to paragraph (d) of this section.

Further correspondence with respect to this matter should be addressed as follows:

By mail: Mail Stop Petitions
Commissioner for Patents
P.O. Box 1450
Alexandria VA 22313-1450

By FAX: (571)273-8300
Attn: Office of Petitions

Telephone inquiries related to this decision should be directed to the undersigned at 571-272-3207.

Cliff Congo
Petitions Attorney
Office of Petitions

UNITED STATES PATENT AND TRADEMARK OFFICE

Commissioner for Patents
United States Patent and Trademark Office
P.O. Box 1450
Alexandria, VA 22313-1450
www.uspto.gov

MAILED

MAR 22 2010

OFFICE OF PETITIONS

Foley & Lardner, LLP
P.O. Box 80278
San Diego, CA 92138-0278

In re Application of	:	
Oliver Laing	:	
Application No. 10/819,455	:	DECISION ON PETITION
Filed: April 6, 2004	:	TO WITHDRAW
Attorney Docket No. ITEU-PLAI102US	:	FROM RECORD
	:	

This is a decision on the Request to Withdraw as attorney or agent of record under 37 C.F.R. § 1.36(b), filed December 10, 2009.

The request is **moot because a revocation of power of attorney has been filed**.

A review of the file record indicates that the power of attorney to Foley & Lardner, LLP and all attorneys/agents associated with customer number 30542 have been revoked by the assignee of the patent application on January 12, 2010. Accordingly, the request to withdraw under 37 C.F.R. § 1.36(b) is moot.

All future communications from the Office will continue to be directed to the below listed until otherwise notified by applicant.

Telephone inquires concerning this decision should be directed to Kimberly Inabinet at 571-272-4618.

/Kimberly Inabinet/

Kimberly Inabinet
Petitions Examiner
Office of Petitions

cc: RATNERPRESTIA
P.O. BOX 980
VALLEY FORGE, PA 19482

UNITED STATES PATENT AND TRADEMARK OFFICE

Commissioner for Patents
United States Patent and Trademark Office
P.O. Box 1450
Alexandria, VA 22313-1450
www.uspto.gov

Date : March 7, 2007

Patent No. : 7,132,386 B2
Inventor(s) : Siadati, et al.
Issued : Nov. 7, 2006
Title : **PREPARATION OF AMORPHOUS SULFIDE SIEVES**
Docket No. : UTSE:094US

Re: Request for Certificate of Correction

Consideration has been given your request for the issuance of a certificate of correction for the above-identified patent under the provisions of 37 CFR 1.322 and/or 1.323.

Assignees' names and addresses (assignment data) printed in a patent are based *solely* on information supplied in the appropriate space for identifying the assignment data, i.e., item 3 of the Fee(s) Transmittal Form PTOL-85B. After payment of the issue fee, correction of assignment data submitted on the PTOL-85B can only be done by Certificate of Correction under 37 CFR 1.323, with a request under 37 CFR 3.81(b).

A request for a patent to be corrected to state the name of the assignee must:

A. state that the assignment was submitted for recordation as set forth in 37 CFR 3.11 before issuance of the patent;
B. include a request for a certificate of correction under 37 CFR 1.323 along with the fee set forth in 37 CFR 1.20(a); and
C. include the processing fee set forth in 37 CFR 1.17(i).

If the request is granted, Certificates of Correction Branch will be notified that a Certificate of Correction may be issued.

See Manual of Patent Examining Procedure, Section 1481.01 (Rev. 3) (Oct. 2005).

Applicant has not included items A and or C above, accordingly, the request for Certificate of Correction to add or change the assignee data is denied.

Any request under 37 CFR 3.81(b) should be directed to the following address or facsimile number:

By mail:	Mail Stop PETITIONS Commissioner for Patents Post Office Box 1450 Alexandria, VA 22313-1450
By hand:	Customer Service Window Mail Stop Petitions Randolph Building 401 Dulany Street Alexandria, VA 22314
By fax:	571-273-8300 ATTN: Office of Petitions

If a fee (currently $100) was previously submitted for consideration of a Request for Certificate of Correction, under CFR 1.323, to correct assignment data, no additional fee is required.

Elisha Evans
For Cecelia Newman
Decisions & Certificates
of Correction Branch
(703) 308-9390 ext. 110

FULBRIGHT & JAWORSKI L.L.P.
600 CONGRESS AVE.
SUITE 2400
AUSTIN TX 78701

CBN/eme

UNITED STATES PATENT AND TRADEMARK OFFICE

Commissioner for Patents
United States Patent and Trademark Office
P.O. Box 1450
Alexandria, VA 22313-1450
www.uspto.gov

Date : July 28, 2007

Patent No. : 7132386 B2
Application No : 10/819480
Inventor(s) : Siadati, et al.
Issued : November 7, 2006
Title : **PREPARATION OF AMORPHOUS SULFIDE SIEVES**
Docket No. : UTSE:094US

Re: Request for Certificate of Correction

Consideration has been given your request for the issuance of a certificate of correction for the above-identified patent under the provisions of 37 CFR 1.322 and/or 1.323.

Assignees' names and addresses (assignment data) printed in a patent are based *solely* on information supplied in the appropriate space for identifying the assignment data, i.e., item 3 of the Fee(s) Transmittal Form PTOL-85B. After payment of the issue fee, correction of assignment data submitted on the PTOL-85B can only be done by Certificate of Correction under 37 CFR 1.323, with a request under 37 CFR 3.81(b).

A request for a patent to be corrected to state the name of the assignee must:

A. state that the assignment was submitted for recordation as set forth in 37 CFR 3.11 before issuance of the patent;
B. include a request for a certificate of correction under 37 CFR 1.323 along with the fee set forth in 37 CFR 1.20(a); and
C. include the processing fee set forth in 37 CFR 1.17(i).

If the request is granted, Certificates of Correction Branch will be notified that a Certificate of Correction may be issued.

See Manual of Patent Examining Procedure, Section 1481.01 (Rev. 3) (Oct. 2005).

Applicant has not included items A and or C above, accordingly, the request for Certificate of Correction to add or change the assignee data is denied.

Any request under 37 CFR 3.81(b) should be directed to the following address or facsimile number:

By mail:	Mail Stop PETITIONS Commissioner for Patents Post Office Box 1450 Alexandria, VA 22313-1450
By hand:	Customer Service Window Mail Stop Petitions Randolph Building 401 Dulany Street Alexandria, VA 22314
By fax:	571-273-8300 ATTN: Office of Petitions

If a fee (currently $100) was previously submitted for consideration of a Request for Certificate of Correction, under CFR 1.323, to correct assignment data, no additional fee is required.

Elisha Evans
For Cecelia Newman
Decisions & Certificates
of Correction Branch
(703) 308-9390 ext. 110

FULBRIGHT & JAWORSKI L.L.P.
600 CONGRESS AVE.
SUITE 2400
AUSTIN TX 78701

CBN/eme

UNITED STATES PATENT AND TRADEMARK OFFICE

Commissioner for Patents
United States Patent and Trademark Office
P.O. Box 1450
Alexandria, VA 22313-1450
www.uspto.gov

FULBRIGHT & JAWORSKI L.L.P.
600 CONGRESS AVE.
SUITE 2400
AUSTIN TX 78701

COPY MAILED

DEC 19 2007

OFFICE OF PETITIONS

In re Application of	:	
Siadati et al.	:	
Application No. 10/819480	:	DECISION
Filing or 371(c) Date: 04/07/2004	:	ON PETITION
Patent No.: 7132386	:	
Issue Date: 11/07/2006	:	
Attorney Docket No.: UTSE:094US	:	

This is a decision on the correspondence entitled "Petition Under 37 C.F.R. § 3.81(b) to Correct Assignee in Issued Patent," filed October 18, 2007, to correct the name of the assignee on the front page of the above-identified patent by way of a Certificate of Correction.

The Petition is **granted**.

The petition was accompanied by a certificate of correction as required by 3.81(b), and the fee submitted with the present petition. As the request complies with the provisions of 37 CFR 3.81(b), it would be appropriate for a certificate of correction to be processed.

Telephone inquiries concerning this matter should be directed to the undersigned at (571) 272-3232. Any questions concerning the issuance of the Certificate of Correction should be directed to the Certificate of Correction Branch at (571) 272-4200.

This matter is being referred to the Certificates of Correction Branch for processing of a certificate of correction after issuance of this application into a patent.

Derek L. Woods
Attorney
Office of Petitions

UNITED STATES PATENT AND TRADEMARK OFFICE

Commissioner for Patents
United States Patent and Trademark Office
P.O. Box 1450
Alexandria, VA 22313-1450
www.uspto.gov

COPY MAILED
NOV 0 9 2006
OFFICE OF PETITIONS

Morrison & Foerster LLP
755 Page Mill Road
Palo Alto, CA 94304-1018

In re Application of	:	
Malaya Chatterjee et al.	:	
Application No. 10/819,493	:	DECISION ON PETITION
Filed: April 6, 2004	:	TO WITHDRAW
Attorney Docket No. 304142000403	:	FROM RECORD
	:	

This is a decision on the Request to Withdraw as attorney or agent of record under 37 C.F.R. § 1.36(b), filed September 1, 2006.

The request is **APPROVED**.

A grantable request to withdraw as attorney/agent of record must be signed by every attorney/agent seeking to withdraw or contain a clear indication that one attorney is signing on behalf of another/others. A request to withdraw will not be approved unless at least 30 (thirty) days would remain between the date of approval and the later of the expiration date of a time to file a response or the expiration date of the maximum time period which can be extended under 37 C.F.R. § 1.136(a).

The request was signed by Thomas Ciotti on behalf of all attorneys of record.

All attorneys/agents of record have been withdrawn.

Applicant is reminded that there is no attorney of record at this time.

The request to change the correspondence of record is not acceptable as the requested correspondence address is not that of: (1) the first named signing inventor; or (2) an intervening assignee of the entire interest under 37 C.F.R 3.71. All future communications from the Office will be directed to the first named signing inventor at the first copied address below until otherwise properly notified by the applicant.

There is no outstanding Office action at this time.

The Revocation Power of Attorney filed on October 4, 2006 was not accepted. The Power of Attorney is from an assignee and the Certificate required by 37 CFR 3.73(b) has not been received.

Telephone inquiries concerning this decision should be directed to Terri Williams at 571-272-2991.

Terri Williams
Petitions Examiner
Office of Petitions

cc: **Malaya Chatterjee**
3512 Reeves Drive
Fort Wright, KY 41017

cc: **Richard Myers, JD**
Stites & Harbison
424 Church Street, Suite 1800
Nashville, TN 37219

UNITED STATES PATENT AND TRADEMARK OFFICE

UNITED STATES DEPARTMENT OF COMMERCE
United States Patent and Trademark Office
Address: COMMISSIONER FOR PATENTS
P.O. Box 1450
Alexandria, Virginia 22313-1450
www.uspto.gov

APPLICATION NUMBER	FILING OR 371 (c) DATE	FIRST NAMED APPLICANT	ATTY. DOCKET NO./TITLE
10/819,493	04/06/2004	Malaya Chatterjee	304142000403

CONFIRMATION NO. 5946

OC000000021166015

OC000000021166015

25226
MORRISON & FOERSTER LLP
755 PAGE MILL RD
PALO ALTO, CA 94304-1018

Date Mailed: 11/08/2006

NOTICE REGARDING CHANGE OF POWER OF ATTORNEY

This is in response to the Power of Attorney filed 09/01/2006.

- The withdrawal as attorney in this application has been accepted. Future correspondence will be mailed to the new address of record. 37 CFR 1.33.

Terri S. Williams

TERRI S WILLIAMS
OP (571) 272-2991

FORMER ATTORNEY/AGENT COPY

UNITED STATES PATENT AND TRADEMARK OFFICE

UNITED STATES DEPARTMENT OF COMMERCE
United States Patent and Trademark Office
Address: COMMISSIONER FOR PATENTS
P.O. Box 1450
Alexandria, Virginia 22313-1450
www.uspto.gov

APPLICATION NUMBER	FILING OR 371 (c) DATE	FIRST NAMED APPLICANT	ATTY. DOCKET NO./TITLE
10/819,493	04/06/2004	Malaya Chatterjee	304142000403

CONFIRMATION NO. 5946

OC000000021166120

OC000000021166120

Malaya Chatterjee
3512 Reeves Drive
Fort Wright, KY 41017

Date Mailed: 11/08/2006

NOTICE REGARDING POWER OF ATTORNEY

This is in response to the Power of Attorney filed 10/04/2006 . The Power of Attorney in this application is not accepted for the reason(s) listed below:

- The Power of Attorney is from an assignee and the Certificate required by 37 CFR 3.73(b) has not been received.

Terri S. Williams

TERRI S WILLIAMS
OP (571) 272-2991

NEW ATTORNEY/AGENT COPY

UNITED STATES PATENT AND TRADEMARK OFFICE

UNITED STATES DEPARTMENT OF COMMERCE
United States Patent and Trademark Office
Address: COMMISSIONER FOR PATENTS
P.O. Box 1450
Alexandria, Virginia 22313-1450
www.uspto.gov

APPLICATION NUMBER	FILING OR 371 (c) DATE	FIRST NAMED APPLICANT	ATTY. DOCKET NO./TITLE
10/819,493	04/06/2004	Malaya Chatterjee	304142000403

CONFIRMATION NO. 5946

OC000000021166120

OC000000021166120

Malaya Chatterjee
3512 Reeves Drive
Fort Wright, KY 41017

Date Mailed: 11/08/2006

NOTICE REGARDING POWER OF ATTORNEY

This is in response to the Power of Attorney filed 10/04/2006 . The Power of Attorney in this application is not accepted for the reason(s) listed below:

- The Power of Attorney is from an assignee and the Certificate required by 37 CFR 3.73(b) has not been received.

Terri S. Williams

TERRI S WILLIAMS
OP (571) 272-2991

FORMER ATTORNEY/AGENT COPY

UNITED STATES PATENT AND TRADEMARK OFFICE

Commissioner for Patents
United States Patent and Trademark Office
P.O. Box 1450
Alexandria, VA 22313-1450
www.uspto.gov

MAIL

OCT 14 2004

DIRECTOR OFFICE
TECHNOLOGY CENTER 2100

Fenwick & West LLP
Silicon Valley Center
801 California Street
Mountain View, CA 94041

In re Application of:
Carey S. Nachenberg
Application No. 10/819,494
Filed: April 06, 2004
For: SIGNATURE DRIVEN CACHE EXTENSION FOR STREAM BASED SCANNING

DECISION ON REQUEST TO WITHDRAW AS ATTORNEY OR AGENT

This is a decision on the Request to Withdraw from Representation filed September 28, 2004.

A grantable request to withdraw as attorney of record should indicate thereon the present mailing addresses of the attorney(s) who is/are withdrawing from the record and of the applicant. The request for withdrawal must be signed by every attorney seeking to withdraw or contain a clear indication that one attorney is signing on behalf of another/others. A request to withdraw will not be approved unless at least 30 (thirty) days would remain between the date of approval and the later of the expiration date of a time to file a response or the expiration date of the maximum time period which can be extended under 37 C.F.R. § 1.136(a). The effective date of withdrawal being the date of decision and not the date of request. See M.P.E.P. § 402.06. 37 C.F.R. § 1.36 further requires that the applicant or patent owner be notified of the withdrawal of the attorney or agent.

The request is **GRANTED**.

All future communications from the Office will be directed to the below-listed address until otherwise notified by applicant. This correspondence address is provided by the withdrawn attorney(s). Applicant is reminded of the obligation to promptly notify the Patent and Trademark Office (Office) of any change in correspondence address to ensure receipt of all communications from the Office.

Vincent N. Trans
Special Program Examiner
Technology Center 2100
Computer Architecture, Software, and
Information Security
703-305-9750

cc: Sonnenschiel Nath & Rosenthal LLP
685 Market Street
6th Floor
San Francisco, CA 94105

UNITED STATES PATENT AND TRADEMARK OFFICE

COMMISSIONER FOR PATENTS
UNITED STATES PATENT AND TRADEMARK OFFICE
P.O. BOX 1450
ALEXANDRIA, VA 22313-1450
www.uspto.gov

Paper No.

KIRKPATRICK & LOCKHART LLP
HENRY W. OLIVER BULDING
535 SMITHFIELD STREET
PITTSBURGH, PA 15222-2312

COPY MAILED

JUL 29 2005

OFFICE OF PETITIONS

In re Application of	:	
Harris et al.	:	DECISION ON PETITION
Application No. 10/819,508	:	
Filed: April 7, 2004	:	
Attorney Docket No. 040180	:	

This is a decision on the PETITION FOR REVIVAL OF AN APPLICATION FOR PATENT ABANDONED UNINTENTIONALLY UNDER 37 CFR 1.137(b) filed June 1, 2005.

The petition is **GRANTED**.

The above-identified application became abandoned for failure to reply to the Notice to File Missing Parts of Application mailed June 22, 2004. The Notice set a period for reply of two (2) months from the mail date of the Notice. No extensions of time under the provisions of 37 CFR 1.136(a) were obtained. No reply having been received, the above-identified application became abandoned on August 23, 2004. A courtesy Notice of Abandonment was mailed on March 15, 2005.

Petitioner has satisfied the requirements of 37 CFR 1.137(b). The petition included the required reply in the form of an executed declaration, payment of the petition fee and the required statement of unintentional delay. Pursuant to the accompanying authorization to charge any required fees, the required surcharge for late filing of the declaration under 37 C.F.R. § 1.16(f) was charged to Deposit Account No. 12-0769.

It is noted that a power of attorney accompanied the petition. However, the required statement under 37 CFR 3.73(b) was not among the papers received in the Office. To have the requested change of power entered, such a statement must be provided.

The application file is being forwarded to the Office of Initial Patent Examination for completion of pre-examination processing.

Telephone inquiries specific to this decision should be directed to the undersigned at (571) 272-3219.

Nancy Johnson
Senior Petitions Attorney
Office of Petitions

UNITED STATES PATENT AND TRADEMARK OFFICE

UNITED STATES DEPARTMENT OF COMMERCE
United States Patent and Trademark Office
Address: COMMISSIONER FOR PATENTS
P.O. Box 1450
Alexandria, Virginia 22313-1450
www.uspto.gov

APPL NO.	FILING OR 371 (c) DATE	ART UNIT	FIL FEE REC'D	ATTY.DOCKET NO	DRAWINGS	TOT CLMS	IND CLMS
10/819,517	04/06/2004	1765	1070	2000-0737.01/US	1	11	3

CONFIRMATION NO. 5837

CORRECTED FILING RECEIPT

OC000000020533928

Kevin D. Martin
Micron Technology, Inc.
8000 S Federal Way, MS 1-525
Boise, ID 83716

Date Mailed: 09/21/2006

Receipt is acknowledged of this regular Patent Application. It will be considered in its order and you will be notified as to the results of the examination. Be sure to provide the U.S. APPLICATION NUMBER, FILING DATE, NAME OF APPLICANT, and TITLE OF INVENTION when inquiring about this application. Fees transmitted by check or draft are subject to collection. Please verify the accuracy of the data presented on this receipt. **If an error is noted on this Filing Receipt, please mail to the Commissioner for Patents P.O. Box 1450 Alexandria Va 22313-1450. Please provide a copy of this Filing Receipt with the changes noted thereon. If you received a "Notice to File Missing Parts" for this application, please submit any corrections to this Filing Receipt with your reply to the Notice. When the USPTO processes the reply to the Notice, the USPTO will generate another Filing Receipt incorporating the requested corrections (if appropriate).**

Applicant(s)

David S. Pecora, Boise, ID;

Power of Attorney:

Kevin Martin--37882

Domestic Priority data as claimed by applicant

This application is a CON of 09/854,206 05/11/2001 PAT 6,716,759

Foreign Applications

If Required, Foreign Filing License Granted: 06/22/2004

The country code and number of your priority application, to be used for filing abroad under the Paris Convention, is US10/819,517

Projected Publication Date: Not Applicable

Non-Publication Request: No

Early Publication Request: No

Title

ETCH OF SILICON NITRIDE SELECTIVE TO SILICON AND SILICON DIOXIDE USEFUL DURING THE FORMATION OF A SEMICONDUCTOR DEVICE

Preliminary Class
438

PROTECTING YOUR INVENTION OUTSIDE THE UNITED STATES

Since the rights granted by a U.S. patent extend only throughout the territory of the United States and have no effect in a foreign country, an inventor who wishes patent protection in another country must apply for a patent in a specific country or in regional patent offices. Applicants may wish to consider the filing of an international application under the Patent Cooperation Treaty (PCT). An international (PCT) application generally has the same effect as a regular national patent application in each PCT-member country. The PCT process **simplifies** the filing of patent applications on the same invention in member countries, but **does not result** in a grant of "an international patent" and does not eliminate the need of applicants to file additional documents and fees in countries where patent protection is desired.

Almost every country has its own patent law, and a person desiring a patent in a particular country must make an application for patent in that country in accordance with its particular laws. Since the laws of many countries differ in various respects from the patent law of the United States, applicants are advised to seek guidance from specific foreign countries to ensure that patent rights are not lost prematurely.

Applicants also are advised that in the case of inventions made in the United States, the Director of the USPTO must issue a license before applicants can apply for a patent in a foreign country. The filing of a U.S. patent application serves as a request for a foreign filing license. The application's filing receipt contains further information and guidance as to the status of applicant's license for foreign filing.

Applicants may wish to consult the USPTO booklet, "General Information Concerning Patents" (specifically, the section entitled "Treaties and Foreign Patents") for more information on timeframes and deadlines for filing foreign patent applications. The guide is available either by contacting the USPTO Contact Center at 800-786-9199, or it can be viewed on the USPTO website at http://www.uspto.gov/web/offices/pac/doc/general/index.html.

For information on preventing theft of your intellectual property (patents, trademarks and copyrights), you may wish to consult the U.S. Government website, http://www.stopfakes.gov. Part of a Department of Commerce initiative, this website includes self-help "toolkits" giving innovators guidance on how to protect intellectual property in specific countries such as China, Korea and Mexico. For questions regarding patent enforcement issues, applicants may call the U.S. Government hotline at 1-866-999-HALT (1-866-999-4158).

LICENSE FOR FOREIGN FILING UNDER
Title 35, United States Code, Section 184
Title 37, Code of Federal Regulations, 5.11 & 5.15

GRANTED

The applicant has been granted a license under 35 U.S.C. 184, if the phrase "IF REQUIRED, FOREIGN FILING LICENSE GRANTED" followed by a date appears on this form. Such licenses are issued in all applications where the conditions for issuance of a license have been met, regardless of whether or not a license may be required as set forth in 37 CFR 5.15. The scope and limitations of this license are set forth in 37 CFR 5.15(a) unless an earlier license has been issued under 37 CFR 5.15(b). The license is subject to revocation upon written notification. The date indicated is the effective date of the license, unless an earlier license of similar scope has been granted under 37 CFR 5.13 or 5.14.

This license is to be retained by the licensee and may be used at any time on or after the effective date thereof unless it is revoked. This license is automatically transferred to any related applications(s) filed under 37 CFR 1.53(d). This license is not retroactive.

The grant of a license does not in any way lessen the responsibility of a licensee for the security of the subject matter as imposed by any Government contract or the provisions of existing laws relating to espionage and the national security or the export of technical data. Licensees should apprise themselves of current regulations especially with respect to certain countries, of other agencies, particularly the Office of Defense Trade Controls, Department of State (with respect to Arms, Munitions and Implements of War (22 CFR 121-128)); the Bureau of Industry and Security, Department of Commerce (15 CFR parts 730-774); the Office of Foreign Assets Control, Department of Treasury (31 CFR Parts 500+) and the Department of Energy.

NOT GRANTED

No license under 35 U.S.C. 184 has been granted at this time, if the phrase "IF REQUIRED, FOREIGN FILING LICENSE GRANTED" DOES NOT appear on this form. Applicant may still petition for a license under 37 CFR 5.12, if a license is desired before the expiration of 6 months from the filing date of the application. If 6 months has lapsed from the filing date of this application and the licensee has not received any indication of a secrecy order under 35 U.S.C. 181, the licensee may foreign file the application pursuant to 37 CFR 5.15(b).

UNITED STATES PATENT AND TRADEMARK OFFICE

UNITED STATES DEPARTMENT OF COMMERCE
United States Patent and Trademark Office
Address: COMMISSIONER FOR PATENTS
P.O. Box 1450
Alexandria, Virginia 22313-1450
www.uspto.gov

THE FARRELL LAW FIRM, LLP
290 Broadhollow Road
Suite 210E
Melville, NY 11747

Mail Date: 04/21/2010

Applicant	: Hyung-Hoon Kim	: DECISION ON REQUEST FOR
Patent Number	: 7664923	: RECALCULATION of PATENT
Issue Date	: 02/16/2010	: TERM ADJUSTMENT IN VIEW
Appliction No	: 10/819,555	: OF WYETH AND NOTICE OF INTENT TO
Filed	: 04/07/2004	: ISSUE CERTIFICATE OF CORRECTION
		:

The Request for Recalculation is **GRANTED** to the extent indicated.

The patent term adjustment has been determined to be **843** days. The USPTO will *sua sponte* issue a certificate of correction reflecting the amount of PTA days determined by the recalculation.

Prior to the issuance of the certificate of correction, the USPTO will afford patentee an opportunity to be heard and request reconsideration. Accordingly, patentee has **one month or thirty (30) days**, whichever is longer, to file a request for reconsideration of this patent term adjustment calculation. See 35 U.S.C. 154(b)(3)(B)(ii) and 37 CFR 1.322(a)(4). No extensions of time will be granted under 37 CFR 1.136.

Patentee should use document code PET.OP if electronically filing a request for reconsideration of this patent term adjustment calculation. The patentee must also include the information required by 37 CFR 1.705(b)(2) and the fee required by 37 CFR 1.18(e). If patentee does not file a timely request for reconsideration of this patent term adjustment calculation including the information required by 37 CFR 1.705(b)(2) and the fee required by 37 CFR 1.18(e), the USPTO will issue a certificate of correction reflecting the PTA determination noted above.

Patentee should be aware that in order to preserve the right to review in the United States District Court for the District of Columbia of the USPTO patent term adjustment determination, patentee must ensure that he or she also take the steps required under 35 U.S.C. 154(b)(4)(A) in a timely manner. Nothing in the request for recalculation should be construed as providing an alternative time frame for commencing a civil action under 35 U.S.C. 154(b)(4)(A).

Any questions concerning this decision should be directed to the Office of Patent Legal Administration at 571-272-7702.

UNITED STATES PATENT AND TRADEMARK OFFICE

Commissioner for Patents
United States Patent and Trademark Office
P.O. Box 1450
Alexandria, VA 22313-1450
www.uspto.gov

Palmer Campbell Evans
Palmer & Dodge LLP
111 Hanmilton Avenue
Boston, MA 02199-7613

COPY MAILED
MAR 1 0 2006
OFFICE OF PETITIONS

In re Application of	:
Udo Stropp et al	:
Application No. 10/819,557	:DECISION ON PETITION
Filed: April 1, 2004	:UNDER 37 CFR 1.137(b)
Attorney Docket No. 1657/2112	:

This is a decision on the petition under 37 CFR 1.137(b), filed September 15, 2005, to revive the above-identified application.

The petition is **DISMISSED**.

Any request for reconsideration of this decision must be submitted within TWO (2) MONTHS from the mail date of this decision. Extensions of time under 37 CFR 1.136(a) are permitted. The reconsideration request should include a cover letter entitled "Renewed Petition under 37 CFR 1.137(b)." This is **not** a final agency action within the meaning of 5 U.S.C. § 704.

The above-identified application became abandoned for failure to reply in a timely manner to the Notice to File Missing Parts of Nonprovisional Application (Notice) mailed October 8, 2004. The Notice set a period for reply of two (2) months from the mail date of the Notice. No extensions of time under the provisions of 37 CFR 1.136(a) were obtained. Accordingly, the above-identified application became abandoned on December 9, 2004. A Notice of abandonment was mailed on July 18, 2005.

A grantable petition under 37 CFR 1.137(b) must be accompanied by: (1) the required reply, unless previously filed; (2) the petition fee as set forth in 37 CFR 1.17(m); (3) a statement that the entire delay in filing the required reply from the due date for the reply until the filing of a grantable petition pursuant to 37 CFR 1.137(b) was unintentional; and (4) any terminal disclaimer (and fee as set forth in 37 CFR 1.20(d)) required by 37 CFR 1.137(c). Where there is a question as to whether either

the abandonment or the delay in filing a petition under 37 CFR 1.137 was unintentional, the Commissioner may require additional information. See MPEP 711.03(c).

The petition fails to satisfy item (1) above. In this regard, the Declaration and Power of Attorney for Patent Application is defective in that it fails to set forth the citizenship of each of the named inventors as required by 35 U.S.C. § 115 and 37 CFR 1.63(a)(3). It is not sufficient that the citizenship appear on an Application Data Sheet. Accordingly, an oath or declaration which sets forth the citizenship of each named inventor is required before the petition to revive can be granted.

Further correspondence with respect to this matter should be addressed as follows:

By mail: Mail Stop PETITIONS
Commissioner for Patents
Post Office Box 1450
Alexandria, VA 22313-1450

By hand: Customer Service Window
Mail Stop Petitions
Randolph Building
401 Dulany Street
Alexandria, VA 22314

By fax: (571) 273-8300
ATTN: Office of Petitions

Any questions concerning this matter may be directed to the undersigned at (571) 272-3218.

Frances Hicks
Petitions Examiner
Office of Petitions

C:\Documents and Settings\FHicks\My Documents\470\Mar9\819557.wpd

UNITED STATES PATENT AND TRADEMARK OFFICE

Commissioner for Patents
United States Patent and Trademark Office
P.O. Box 1450
Alexandria, VA 22313-1450
www.uspto.gov

PALMER & DODGE LLP
KATHLEEN WILLIAMS
111 HUNTINGTON AVENUE
BOSTON, MA 02199

COPY MAILED

MAY 03 2007

OFFICE OF PETITIONS

In re Application of	:	
Udo Stropp et al	:	
Application No. 10/819,557	:	DECISION ON PETITION
Filed: April 1, 2004	:	
Attorney Docket No. 1657/2112	:	

This is a decision on the renewed petition under 37 CFR 1.137(b), filed October 10, 2006, to revive the above-identified application.

The petition is **GRANTED.**

This application became abandoned for failure to reply in a timely manner to the Notice to File Missing Parts of Nonprovisional Application (Notice), mailed October 8, 2004. The Notice set a period for reply of two (2) months from the mail date of the Notice. No extensions of time under the provisions of 37 CFR 1.136(a) were obtained. Accordingly, the application became abandoned on December 9, 2004. A Notice of Abandonment was mailed on July 18, 2005.

The renewed petition satisfies the requirements of 37 CFR 1.137(b) in that petitioner has supplied (1) the required reply to the Notice of October 8, 2004, (2) the petition fee of $1,500, and (3) a proper statement of unintentional delay. Accordingly, the failure to timely reply to the Notice of October 8, 2004 is accepted as being unintentionally delayed.

It is noted that the Customer Number on the Application Data Sheet differs from the Customer Number on the declaration executed by the applicants. The Customer Number appearing on the declaration will be utilized as the correspondence address for this application. If the Customer Number appearing on the Application Data Sheet is the desired correspondence address, the Office should be promptly notified.

This application is being referred to the Office of Initial Patent Examination for further processing in accordance with this decision on petition.

Telephone inquiries concerning this decision should be directed to the undersigned at (571) 272-3218.

Frances Hicks
Petitions Examiner
Office of Petitions

UNITED STATES PATENT AND TRADEMARK OFFICE

Commissioner for Patents
United States Patent and Trademark Office
P.O. Box 1450
Alexandria, VA 22313-1450
www.uspto.gov

DELPHI TECHNOLOGIES, INC.
M/C 480-410-202
PO BOX 5052
TROY, MI 48007

COPY MAILED

AUG 2 8 2008

In re Application of	:	
Philip J. Dingle	:	
Application No. 10/819,586	:	ON PETITION
Filed: April 7, 2004	:	
Attorney Docket No. DP-310842	:	

This is a decision on the petition under 37 CFR 1.137(b), filed on March 11, 2008, to revive the above-identified application.

The application became abandoned for failure to timely respond to the non-final Office action mailed August 17, 2007.

The petition satisfies the requirements of 37 CFR 1.137(b) in that petitioner has supplied (1) the reply in the form of an amendment; (2) the petition fee of $1,540; and (3) a proper statement of unintentional delay. Therefore, the petition is **GRANTED**.

This application file is being referred to Technology Center Art Unit 3752 for review of the amendment filed with the instant petition.

Telephone inquiries concerning this decision should be directed to the undersigned at (571) 272-3226.

Andrea Smith
Petitions Examiner
Office of Petitions

UNITED STATES PATENT AND TRADEMARK OFFICE

Commissioner for Patents
United States Patent and Trademark Office
P.O. Box 1450
Alexandria, VA 22313-1450
www.uspto.gov

QUINE INTELLECTUAL
PROPERTY LAW GROUP, P.C.
P.O. BOX 458
ALAMEDA, CA 94501

COPY MAILED

JUN 29 2007

OFFICE OF PETITIONS

In re Application of
Ronny BAR-GADDA
Application No. 10/819,591
Filed: April 6, 2004
Attorney Docket No. 00021-004

DECISION ON PETITION
TO WITHDRAW
FROM RECORD

This is a decision on the Request to Withdraw as attorney or agent of record under 37 C.F.R. § 1.36(b), filed April 4, 2006.

The request is **DISMISSED** as moot.

A review of the file record indicates that the power of attorney to Quine Intellectual Property Law Group, P.C. has been revoked by the assignee of the patent application on April 4, 2006. Accordingly, the request to withdraw under 37 C.F.R. § 1.36(b) is moot.

All future communications from the Office will continue to be directed to the below-listed address unless notified by applicant.

There are no pending Office actions at the present time.

Telephone inquires concerning this decision should be directed to Diane Goodwyn at 571-272-6735.

April Wise
Petitions Examiner
Office of Petitions

cc: RONNY BAR-GADDA
121 MONROE DRIVE
PALO ALTO, CA 94306

UNITED STATES PATENT AND TRADEMARK OFFICE

UNITED STATES DEPARTMENT OF COMMERCE
United States Patent and Trademark Office
Address: COMMISSIONER FOR PATENTS
P.O. Box 1450
Alexandria, Virginia 22313-1450
www.uspto.gov

APPLICATION NUMBER	FILING OR 371 (c) DATE	FIRST NAMED APPLICANT	ATTY. DOCKET NO./TITLE
10/819,591	04/06/2004	Ronny Bar-Gadda	00021-004

CONFIRMATION NO. 6774

OC000000024392638

22798
QUINE INTELLECTUAL PROPERTY LAW GROUP, P.C.
P O BOX 458
ALAMEDA, CA 94501

Date Mailed: 06/18/2007

NOTICE REGARDING CHANGE OF POWER OF ATTORNEY

This is in response to the Power of Attorney filed 04/04/2006.

- The Power of Attorney to you in this application has been revoked by the assignee who has intervened as provided by 37 CFR 3.71. Future correspondence will be mailed to the new address of record(37 CFR 1.33).

Office of Initial Patent Examination (571) 272-4000, or 1-800-PTO-9199
FORMER ATTORNEY/AGENT COPY

UNITED STATES PATENT AND TRADEMARK OFFICE

UNITED STATES DEPARTMENT OF COMMERCE
United States Patent and Trademark Office
Address: COMMISSIONER FOR PATENTS
P.O. Box 1450
Alexandria, Virginia 22313-1450
www.uspto.gov

APPLICATION NUMBER	FILING OR 371 (c) DATE	FIRST NAMED APPLICANT	ATTY. DOCKET NO./TITLE
10/819,591	04/06/2004	Ronny Bar-Gadda	00021-004

CONFIRMATION NO. 6774

OC000000024392638

22798
QUINE INTELLECTUAL PROPERTY LAW GROUP, P.C.
P O BOX 458
ALAMEDA, CA 94501

Date Mailed: 06/18/2007

NOTICE REGARDING CHANGE OF POWER OF ATTORNEY

This is in response to the Power of Attorney filed 04/04/2006.

- The Power of Attorney to you in this application has been revoked by the assignee who has intervened as provided by 37 CFR 3.71. Future correspondence will be mailed to the new address of record(37 CFR 1.33).

Office of Initial Patent Examination (571) 272-4000, or 1-800-PTO-9199
NEW ATTORNEY/AGENT COPY

UNITED STATES PATENT AND TRADEMARK OFFICE

UNITED STATES DEPARTMENT OF COMMERCE
United States Patent and Trademark Office
Address: COMMISSIONER FOR PATENTS
P.O. Box 1450
Alexandria, Virginia 22313-1450
www.uspto.gov

APPLICATION NUMBER	FILING OR 371 (c) DATE	FIRST NAMED APPLICANT	ATTY. DOCKET NO./TITLE
10/819,591	04/06/2004	Ronny Bar-Gadda	00021-004

CONFIRMATION NO. 6774

OC000000024392656

40461
EDWARD S. WRIGHT
1100 ALMA STREET, SUITE 207
MENLO PARK, CA 94025

Date Mailed: 06/18/2007

NOTICE OF ACCEPTANCE OF POWER OF ATTORNEY

This is in response to the Power of Attorney filed 04/04/2006.

The Power of Attorney in this application is accepted. Correspondence in this application will be mailed to the above address as provided by 37 CFR 1.33.

Diane Gordy

Office of Initial Patent Examination (571) 272-4000, or 1-800-PTO-9199
ATTORNEY/APPLICANT COPY

UNITED STATES PATENT AND TRADEMARK OFFICE

Commissioner for Patents
United States Patent and Trademark Office
P.O. Box 1450
Alexandria, VA 22313-1450
www.uspto.gov

ANTHONY T. CASCIO, ESQ.
CASCIO, SCHMOYER & ZERVAS
423 BROADWAY AVE., STE. 314
MILLBRAE, CA 94030-1905

COPY MAILED

MAY 22 2009

OFFICE OF PETITIONS

In re Application of	:	
Ronny BAR-GADDA	:	
Application No. 10/819,591	:	DECISION ON PETITION
Filed: April 6, 2004	:	TO WITHDRAW
Attorney Docket No. 00021-004	:	FROM RECORD
	:	

This is a decision on the Request to Withdraw as attorney or agent of record under 37 C.F.R. § 1.36(b), filed January 11, 2006.

The request is **NOT APPROVED** as moot.

A review of the file record indicates that the power of attorney to Cascio, Schmoyer & Zervas, PC, has been revoked by the assignee of the patent application on March 23, 2006. Accordingly, the request to withdraw under 37 C.F.R. § 1.36(b) is moot.

Telephone inquires concerning this decision should be directed to undersigned at 571-272- 6735.

Diane Goodwyn
Petitions Examiner
Office of Petitions

cc: RONNY BAR-GADDA, PRESIDENT
BAR-GADDA, LLC.
18809 COX AVENUE, SUITE 250
SARATOGA, CA 95070

UNITED STATES PATENT AND TRADEMARK OFFICE

Commissioner for Patents
United States Patent and Trademark Office
P.O. Box 1450
Alexandria, VA 22313-1450
www.uspto.gov

TOWNSEND AND TOWNSEND AND CREW, LLP
TWO EMBARCADERO CENTER
EIGHTH FLOOR
SAN FRANCISCO, CA 94111-3834

COPY MAILED

OCT 1 0 2006

OFFICE OF PETITIONS

In re Application of Choi :
Application No. 10/819,596 :
Filing Date: April 6, 2004 :
Attorney Docket No. 021801-001010US :

Decision on Petition

This is a decision on the petition under 37 CFR 1.137(b), filed June 26, 2006, to revive the above-identified application.

The petition is **granted**.

The above-identified application became abandoned for failure to submit the issue fee and publication fee in a timely manner in reply to the Notice of Allowance mailed March 20, 2006, which set a statutory period for reply of three (3) months. Accordingly, the above-identified application became abandoned as of midnight on June 20, 2006.

The instant petition requests revival of the application.

Petitioner has met the requirements to revive the above-identified application pursuant to 37 CFR 1.137(b). Therefore, the petition is granted and the application is revived.

For the reasons below, the issue fee has been charged to petitioner's deposit account.

Petitioner filed a Request for Continued Examination under §1.114 (and RCE Fee) and submission (an amendment) as the proposed reply. However, in an application or patent, abandoned or lapsed for failure to pay the issue fee or any portion thereof, the required reply must be the payment of the issue fee or any outstanding balance thereof.

37 CFR 1.137(c) states,

> In an application or patent, abandoned or lapsed for failure to pay the issue fee or any portion thereof, the required reply must include payment of the issue fee or any outstanding balance. In an application, abandoned for failure to pay the publication fee, the required reply must include payment of the publication fee.

Petitioner is advised that the instant issue fee may be applied towards the issue fee required by a new Notice of Allowance. In order to have the issue fee applied towards any fees

required by a future Notice of Allowance, written instructions including such a request must be filed in response to the new Notice of Allowance.

Technology Center Art Unit 2818 will be informed of the instant decision and the application, including the RCE and IDS filed June 26, 2006, will be further examined in due course.

Telephone inquiries regarding this communication should be directed to Petitions Attorney Steven Brantley at (571) 272-3203.

Charles Steven Brantley
Senior Petitions Attorney
Office of Petitions

SPE RESPONSE FOR CERTIFICATE OF CORRECTION

Paper No.:20050510

DATE : May 10, 2005

TO SPE OF : ART UNIT 2834

SUBJECT : Request for Certificate of Correction on Patent No.: 6,815,847

A response is requested with respect to the accompanying request for a certificate of correction.

Please complete this form and return with file, within **7** days to:
Certificates of Correction Branch - PK 3-910
Palm location **7590** - Tel. No. 305-8201

With respect to the change(s) requested, correcting Office and/or Applicant's errors, should the patent read as shown in the certificate of correction? No new matter should be introduced, nor should the scope or meaning of the claims be changed.

Thank You For Your Assistance **Certificates of Correction Branch**

The request for issuing the above-identified correction(s) is hereby:
Note your decision on the appropriate box.

☒ **Approved** All changes apply.

☐ **Approved in Part** Specify below which changes **do not** apply.

☐ **Denied** State the reasons for denial below.

Comments:

SPE: Darren E. Schuberg **Art Unit** 2834

UNITED STATES PATENT AND TRADEMARK OFFICE

Commissioner for Patents
United States Patent and Trademark Office
P.O. Box 1450
Alexandria, VA 22313-1450
www.uspto.gov

J. MICHAEL BOGGS
KILPATRICK STOCKTON LLP
1001 WEST FOURTH STREET
WINSTON-SALEM NC 27101-2400

COPY MAILED

SEP 22 2004

OFFICE OF PETITIONS

In re Application of	:
Joseph W. Lear et al.	: DECISION ACCORDING STATUS
Reissue Application No. 10/819,603	: UNDER 37 CFR 1.47(a)
Filed: April 7, 2004	:
Attorney Docket No. 41872-294261	:

This is in response to the petition under 37 CFR 1.47(a), filed August 16, 2004.

The petition is GRANTED.

The above-identified application was filed on April 7, 2004, without an executed oath or declaration and naming Joseph W. Lear, Mac Mehta and J. Lynn Greear as joint inventors.

Accordingly, on June 22, 2004, a "Notice To File Missing Parts of Application" was mailed, requiring an executed oath or declaration and a surcharge for its late filing. A two month period for reply was set.

In response, on August 16, 2004, a petition under 37 CFR 1.47(a) was filed with, *inter alia*, the last known address of Mac Mehta, petition fee and surcharge, and a declaration signed by all of the joint inventors except Mac Mehta. Additionally, J. Michael Boggs, the Attorney of Record, outlines the efforts enlisted to have Mr. Mehta execute the oath or declaration and further explains that Mr. Mehta, in two telephone conversations directly with Mr. Boggs on March 29, 2004 and August 13, 2004, expressly refused to execute the oath or declaration, and thus to cooperate with the filing of the instant application.

The applicant files this petition alleging that joint inventor Mac Mehta refuses to sign the oath/declaration and seeks status under 37 CFR 1.47(a).

A grantable petition under 37 CFR 1.47(a) requires: (1) proof that the non-signing inventor cannot be reached or refuses to sign the oath or declaration after having been presented with the application papers (specification, claims and drawings); (2) an

acceptable oath or declaration in compliance with 35 U.S.C. §§ 115 and 116; (3) the petition fee; and (4) a statement of the last known address of the non-signing inventor.

The above-identified application and papers have been reviewed and found in compliance with 37 CFR 1.47(a). In view thereof, this application is hereby accorded Rule 1.47(a) status.

Thus, as provided in Rule 1.47(c), this Office will forward notice of this application's filing to the non-signing inventors at the address given in the petition. Notice of the filing of this application will also be published in the Official Gazette.

The application is being forwarded to Technology Center 3654 for examination in due course.

Telephone inquiries related to this decision should be directed to the undersigned Petitions Attorney at (703) 305-4497.

Patricia Faison-Ball

Patricia Faison-Ball
Senior Petitions Attorney
Office of Petitions

UNITED STATES PATENT AND TRADEMARK OFFICE

Commissioner for Patents
United States Patent and Trademark Office
P.O. Box 1450
Alexandria, VA 22313-1450
www.uspto.gov

MAC MEHTA
601 BEELER AVENUE
HAMLET, NC 28345

COPY MAILED

SEP 22 2004

OFFICE OF PETITIONS

In re Application of
Joseph W. Lear et al.
Application No. 10/819,603
Filed: April 7, 2004
For: REUSABLE YARN TUBE

Dear Mr. Mehta:

You are named as a joint inventor in the above identified United States reissue patent application, filed under the provisions of 35 U.S.C. 116 (United States Code), and 37 CFR 1.47(a), Rules of Practice in Patent Cases. Should a patent be granted on the application you will be designated therein as a joint inventor.

As a named inventor you are entitled to inspect any paper in the file wrapper of the application, order copies of all or any part thereof (at a prepaid cost per 37 CFR 1.19) or make your position of record in the application. Alternatively, you may arrange to do any of the preceding through a registered patent attorney or agent presenting written authorization from you. If you care to join the application, counsel of record (see below) would presumably assist you. Joining in the application would entail the filing of an appropriate oath or declaration by you pursuant to 37 CFR 1.63.

Telephone inquiries regarding this communication should be directed to the undersigned Petitions Attorney at (703) 305-4497. Effective September 29, 2004, the telephone number will be (571) 272-3212. Requests for information regarding your application should be directed to the File Information Unit at 703/308-2733. Information regarding how to pay for and order a copy of the application, or a specific paper in the application, should be directed to Certification Division at 703/308-9726 or 1-800-972-6382 (outside the Washington D.C. area).

Patricia Faison-Ball

Patricia Faison-Ball
Senior Petitions Attorney
Office of Petitions

cc:
J. MICHAEL BOGGS
KILPATRICK STOCKTON LLP
1001 WEST FOURTH STREET
WINSTON-SALEM NC 27101-2400

UNITED STATES PATENT AND TRADEMARK OFFICE

OCT 12 2006

Commissioner for Patents
United States Patent and Trademark Office
P.O. Box 1450
Alexandria, VA 22313-1450
www.uspto.gov

FOLEY AND LARDNER LLP
SUITE 500
3000 K STREET NW
WASHINGTON DC 20007

In re Application of	:
Rong-Kung Chang et al	:
Serial No.: 10/819,620	: PETITION TO MAKE SPECIAL
Filed: April 7, 2004	:
Attorney Docket No.: 063089-0113	:

This is a decision on the petition filed on September 26, 2006 to make the above-identified application special for accelerated examination procedure under 37 C.F.R. § 1.102(d).

The petition to make the application special is **DENIED**.

REGULATION AND PRACTICE

To be eligible for accelerated examination under 37 C.F.R. § 1.102(d) and pursuant to the "Change to Practice for Petitions in Patent Applications to Make Special and for Accelerated Examination" published in the Federal Register on June 26, 2006 (71 Fed. Reg. 36323), the following conditions must be satisfied:

1. The application must be a **newly** filed non-reissue utility or design application filed under 37 CFR 1.111(a);
2. The application, the petition and the required fees must be filed electronically using the USPTO's electronic filing system (EFS), or EFS-web; if not filed electronically, a statement asserting that EFS and EFS-web were not available during the normal business hours;
3. The application, at the time of filing, must be complete under 37 CFR 1.51 and in condition for examination;
4. The application must contain three or fewer independent claims and twenty or fewer total claims and the claims must be directed to a single invention.

The application as filed is not eligible for the accelerated examination under 37 C.F.R. § 1.102(d) because it was not a new application at the time the petition was filed and was not filed electronically.

For the above-stated reasons, the petition is denied. The application will therefore be taken up by the examiner for action in its regular turn.

Any inquiry regarding this decision should be directed to William R. Dixon, Jr., Special Program Examiner, at (571) 272-0519.

William R. Dixon, Jr.
Special Program Examiner
Technology Center 5000

UNITED STATES PATENT AND TRADEMARK OFFICE

Commissioner for Patents
United States Patent and Trademark Office
Washington, D.C. 20231
www.uspto.gov

OIPE JC106
NOV 2 3 2004
PATENT & TRADEMARK OFFICE

Paper No. 6

COPY MAILED

APR 1 3 2001

OFFICE OF PETITIONS
A/C PATENTS

Albert S. Michalik
Michalik & Wylie
14645 Bel-Red Road, Suite 103
Bellevue, WA 98007

In re Application of
Vivek P. Kamath et al.
Application No. 09/535,058
Filed: March 24, 2000
For: Extended File System

: DECISION ACCORDING STATUS
: UNDER 37 CFR 1.47(a)

This is a decision on the request for reconsideration under 37 CFR 1.47(a) filed April 6, 2001.

The petition under 37 CFR 1.47(a) is **granted**.

Petitioner has shown that the non-signing inventor has refused to join in the filing of the above-identified application.

The above-identified application and papers have been reviewed and found in compliance with 37 CFR 1.47(a). This application is hereby accorded Rule 1.47(a) status.

As provided in Rule 1.47(a), this Office will forward notice of this application's filing to the non-signing inventor at the address given in the Declaration. Notice of the filing of this application will also be published in the Official Gazette.

After the mailing of this decision, the file will be forwarded to Technology Center AU 2756, for examination in due course.

Telephone inquiries regarding this decision should be directed to Latrice Bond at (703) 308-6911.

Frances Hicks

Frances Hicks
Lead Petitions Examiner
Office of Petitions
Office of the Deputy Commissioner
for Patent Examination Policy

OIPE JC106
NOV 2 3 2004
PATENT & TRADEMARK OFFICE

PATENT
Attorney Docket No. 2440

IN THE UNITED STATES PATENT AND TRADEMARK OFFICE

In re Application of: Kamath et al.

Serial No. 09/535,058 Group Art Unit: 2756

Filed: March 24, 2000 Examiner: Not Assigned

For: Extended File System

Assistant Commissioner for Patents
Washington, D.C. 20231

PETITION IN ACCORDANCE WITH 37 C.F.R. 1.47 FOR INVENTOR CRAIG S. BROWN, WHO CANNOT BE REACHED FOR SIGNATURE

The undersigned, on behalf of the inventors that have signed the attached declaration, hereby petitions to include the inventor Craig S. Brown, who could not be reached for signature, in the application.

The pertinent facts are as follows: Mr. Brown has left the assignee of the present application, Microsoft Corporation. A certified letter was sent to his last known address, which was returned "Moved, Left No Address." Other attempts to contact him, including through acquaintances and email addresses, were also not successful.

The petition fee set forth in Section 1.17(i) is included with this petition.

Mr. Brown's last known address is as follows:

Craig S. Brown
17405 20th Drive SE
Bothell, Washington 98012

Roger D. Wylie
Attorney for Applicants

UNITED STATES PATENT AND TRADEMARK OFFICE

Commissioner for Patents
United States Patent and Trademark Office
P.O. Box 1450
Alexandria, VA 22313-1450
www.uspto.gov

LAW OFFICES OF ALBERT S. MICHALIK
C/O MICROSOFT CORPORATION
704 – 228th AVENUE NE
SUITE 193
SAMMAMISH, WA 98074

MAILED

NOV 22 2005

TECHNOLOGY CENTER 2100

In re Application of:
KAMATH, ET AL.
Application Serial No.: 10/819,624
Filed: April 7, 2004
For: **EXTENDED FILE SYSTEM**

DECISION ON
PETITION *under 37 CFR 1.102*

This is a decision on the petition, filed on November 10, 2005 under MPEP 708.01(I), requesting an expedited action on the merits. This petition has been considered as a request to affirm that this application is under "special" status in accordance with 37 CFR 1.102.

This application is a continuation of SN 09/535,058 filed March 24, 2000.

708.01 [R-2] List of Special Cases, states in part:
(I) Applications pending more than 5 years, ***including those which, by relation to a prior United States application, have an effective pendency of more than 5 years***. See MPEP § 707.02. [emphasis added]

In accordance with MPEP section 708.01(I), applications pending over 5 years, including those which by relation to a prior United States application, should be considered special. This application by virtue of its prolonged pendency is considered special in accordance with PTO policy.

Accordingly, the petition is **Granted**.

The examiner will be notified that this application should be considered as "special" and appropriate for expedited action. If the application is subsequently allowed, it will be given priority for printing. See M.P.E.P. §1309.

Brian L. Johnson
Special Program Examiner
Technology Center 2100
Computer Architecture, Software, and Information Security

UNITED STATES PATENT AND TRADEMARK OFFICE

Commissioner for Patents
United States Patent and Trademark Office
P.O. Box 1450
Alexandria, VA 22313-1450
www.uspto.gov

SINSHEIMER JUHNKE LEBENS & MCIVOR, L.L.P.
1010 PEACH STREET
P.O. BOX 31
SAN LUIS OBISPO, CA 93406

COPY MAILED

AUG 0 6 2008

OFFICE OF PETITIONS

In re Application of	:	
Kroll et al.	:	
Application No. 10/819,641	:	DECISION ON PETITION
Filed: April 6, 2004	:	
Attorney Docket No. 3102.019	:	

This is a decision on the petition under the unintentional provisions of 37 CFR 1.137(b), filed January 22, 2008, to revive the above-identified application.

The petition is **GRANTED**.

The application became abandoned for failure to timely file a reply within the meaning of 37 CFR 1.113 to the final Office action of April 13, 2007. The proposed reply required for consideration of a petition to revive must be a Notice of Appeal (and appeal fee required by 37 CFR 41.20(b)(2), an amendment that *prima facie* places the application in condition for allowance, a Request for Continued Examination and submission (37 CFR 1.114), or the filing of a continuing application under 37 CFR 1.53(b). See MPEP 711.03(c)(III)(A)(2). No extensions of time pursuant to the provisions of 37 CFR 1.136(a) were timely filed. Accordingly, the date of abandonment of this application is July 14, 2007. A Notice of Abandonment was mailed October 23, 2007.

The petition satisfies the requirements of 37 CFR 1.137(b) in that petitioner has supplied (1) the reply in the form of a Request for Continued Examination (RCE) and fee of $405.00, and the submission required by 37 CFR 1.114; (2) the petition fee of $770.00; and (3) a proper statement of unintentional delay.

Further, an extension of time under 37 CFR 1.136 must be filed prior to the expiration of the maximum extendable period for reply. *See* In re Application of S., 8 USPQ2d 1630, 1631 (Comm'r Pats. 1988). Since the $525.00, three month extension of time fee submitted with the petition on January 22, 2008 was subsequent to the maximum extendable period for reply, this fee is unnecessary and will be refunded to petitioner's credit card in due course.

Telephone inquiries concerning this decision should be directed to Joan Olszewski at (571) 272-7751.

This application is being referred to Technology Center AU 3766 for processing of the RCE and for appropriate action by the Examiner in the normal course of business on the amendment submitted in accordance with 37 CFR 1.114.

Liana Walsh
Petitions Examiner
Office of Petitions

UNITED STATES PATENT AND TRADEMARK OFFICE

Commissioner for Patents
United States Patent and Trademark Office
P.O. Box 1450
Alexandria, VA 22313-1450
www.uspto.gov

JJGJr : 12-07

COPY MAILED
DEC 1 0 2007
OFFICE OF PETITIONS

FISH & RICHARDSON PC
P.O. BOX 1022
MINNEAPOLIS MN 55440-1022

In re Application of	:	
Kloek, et al.	:	
Application No. 10/819,645	:	DECISION
Filed: 6 April, 2004	:	
Attorney Docket No. 12557-002002	:	

This is a decision on the petition filed on 12 October, 2007, and considered as a request to withdraw the holding of abandonment under 37 C.F.R. §1.181.

The petition as considered under 37 C.F.R. §1.181 is **GRANTED**.

BACKGROUND

The record reflects that:

- Petitioner failed to reply timely and properly to the final Office action mailed on 22 March, 2007, with reply due absent extension of time on or before 22 June, 2007;
- the application went abandoned after midnight 22 June, 2007;
- the Office mailed the Notice of Abandonment 27 September, 2007;
- on 12 October, 2007, Petitioner filed the instant petition with, *inter alia*, an averment that a reply in the form of a request for continued examination (RCE) with fee and a submission under 37 C.F.R. §1.114 was filed with a request and fee for extension of time (which was charged) on 26 September, 2007, over a Monday, 24 September, 2007, certificate of mailing, and Petitioner made such showings with copies of documents (including the reply and the date-stamped ("SEP 26 2007") receipt card (see: MPEP

'503[1]) and of the reply and made such statements of Petitioner's own knowledge as set forth in the guidance in the Commentary at MEEP §711.03(c).

The availability of applications and application papers online to applicants/practitioners who diligently associate their Customer Number with the respective application(s) now provides an applicant/practitioner on-demand information as to events/transactions in an application. Thus, now if one wishes to know the progress in and/or status of an application or the accuracy of the data therein, one need only look at the file online.

Out of an abundance of caution, Petitioners always are reminded that the filing of a petition under 37 C.F.R. §1.181 does not toll any periods that may be running any action by the Office and a petition seeking relief under the regulation must be filed within two (2) months of the act complained of (see: 37 C.F.R. §1.181(f)), and that those registered to practice and all others who make representations before the Office are reminded to inquire into the underlying facts of representations made to the Office and support averments with the appropriate documentation– since all owe to the Office the continuing duty to disclose.[2]

---

[1] MPEP '503 provides in pertinent part:

'503 Application Number and Filing Receipt

* * *

A return postcard should be attached to *each* patent application for which a receipt is desired. It is important that the return postcard itemize all of the components of the application. If the postcard does not itemize each of the components of the application, it will not serve as evidence that any component which was not itemized was received by the United States Patent and Trademark Office (USPTO). It should be recognized that the identification of an application by application number does not necessarily signify that the USPTO has accepted the application as complete (37 C.F.R. '1.53(a)).

* * *

RETURN POSTCARD

If a receipt of any item (e.g., paper or fee) filed in the USPTO is desired, it may be obtained by enclosing with the paper a self-addressed postcard specifically identifying the item. The USPTO will stamp the receipt date on the postcard and place it in the outgoing mail. A postcard receipt which itemizes and properly identifies the items which are being filed serves as *prima facie* evidence of receipt in the USPTO of all the items listed thereon on the date stamped thereon by the USPTO.

The identifying data on the postcard should be so complete as to clearly identify the item for which receipt is requested. For example, the postcard should identify the applicant=s name, application number (if known), confirmation number (if known), filing date, interference number, title of the invention, etc. The postcard should also identify the type of paper being filed, e.g., new application, affidavit, amendment, notice of appeal, appeal brief, drawings, fees, motions, supplemental oath or declaration, petition, etc., and the number of pages being submitted. If a new application is being filed, all parts of the application being submitted should be separately listed on the postcard, e.g., the number of pages of specification (including written description, claims and abstract), number of claims, number of sheets of drawings, number of pages of oath/declaration, number of pages of cover sheet (provisional application).

The postcard receipt will not serve as *prima facie* evidence of receipt of any item which is not adequately itemized on the postcard. For example, merely listing on the postcard Aa complete application@ or Apatent application@ will not serve as a proper receipt for each of the required components of an application (e.g., specification (including claims), drawings (if necessary), oath or declaration and the application filing fee) or missing portions (e.g., pages, sheets of drawings) of an application if one of the components or portion of a component is found to be missing by the USPTO. Each separate component should be specifically and properly itemized on the postcard. Furthermore, merely incorporating by reference in the postcard receipt, the items listed in a transmittal letter will not serve as *prima facie* evidence of receipt of those items.

The person receiving the item(s) in the USPTO will check the listing on the postcard against the item(s) being filed to be sure they are properly identified and that all the items listed on the postcard are presently being submitted to the USPTO. If any of the items listed on the postcard are not being submitted to the USPTO, those items will be crossed off and the post-card initialed by the person receiving the items. Upon return of a postcard receipt from the USPTO, the postcard receipt should be promptly reviewed by the person who filed the items to ensure that every item specifically denoted on the postcard was received by the USPTO. If the postcard receipt has been annotated to indicate that a particular item denoted on the postcard was not received by the USPTO, the postcard receipt will not serve as *prima facie* evidence of receipt of that item in the USPTO. (Emphasis supplied.)

[2] See supplement of 17 June, 1999. The Patent and Trademark Office is relying on petitioner's duty of candor and good faith and accepting a statement made by Petitioner. See Changes to Patent Practice and Procedure, 62 Fed. Reg. at 53160 and 53178, 1203 Off. Gaz. Pat. Office at 88 and 103 (responses to comments 64 and 109)(applicant obligated under 37 C.F.R. §10.18 to inquire into the underlying facts and circumstances when providing statements to the Patent and Trademark Office).

STATUTES, REGULATIONS AND ANALYSIS

Congress has authorized the Commissioner to "revive an application if the delay is shown to the satisfaction of the Commissioner to have been "unavoidable." 35 U.S.C. §133 (1994).[3]

The regulations at 37 C.F.R. §1.137(a) and (b) set forth the requirements for a petitioner to revive a previously unavoidably or unintentionally, respectively, abandoned application under this congressional grant of authority.

The language of 35 U.S.C. §133 and 37 C.F.R. §1.137(a) is clear, unambiguous, and without qualification: the delay in tendering the reply to the outstanding Office action, as well as filing the first petition seeking revival, must have been unavoidable for the reply now to be accepted on petition.[4]

Specifically, the regulations at 37 C.F.R. §10.18 provide:

§ 10.18 Signature and certificate for correspondence filed in the Patent and Trademark Office.
(a) For all documents filed in the Office in patent, trademark, and other non-patent matters, except for correspondence that is required to be signed by the applicant or party, each piece of correspondence filed by a practitioner in the Patent and Trademark Office must bear a signature by such practitioner complying with the provisions of §1.4(d), §1.4(e), or § 2.193(c)(1) of this chapter.
(b) By presenting to the Office (whether by signing, filing, submitting, or later advocating) any paper, the party presenting such paper, whether a practitioner or non-practitioner, is certifying that—
(1) All statements made therein of the party's own knowledge are true, all statements made therein on information and belief are believed to be true, and all statements made therein are made with the knowledge that whoever, in any matter within the jurisdiction of the Patent and Trademark Office, knowingly and willfully falsifies, conceals, or covers up by any trick, scheme, or device a material fact, or makes any false, fictitious or fraudulent statements or representations, or makes or uses any false writing or document knowing the same to contain any false, fictitious or fraudulent statement or entry, shall be subject to the penalties set forth under 18 U.S.C. 1001, and that violations of this paragraph may jeopardize the validity of the application or document, or the validity or enforceability of any patent, trademark registration, or certificate resulting therefrom; and
(2) To the best of the party's knowledge, information and belief, formed after an inquiry reasonable under the circumstances, that —
(i) The paper is not being presented for any improper purpose, such as to harass someone or to cause unnecessary delay or needless increase in the cost of prosecution before the Office;
(ii) The claims and other legal contentions therein are warranted by existing law or by a nonfrivolous argument for the extension, modification, or reversal of existing law or the establishment of new law;
(iii) The allegations and other factual contentions have evidentiary support or, if specifically so identified, are likely to have evidentiary support after a reasonable opportunity for further investigation or discovery; and
(iv) The denials of factual contentions are warranted on the evidence, or if specifically so identified, are reasonably based on a lack of information or belief.
(c) Violations of paragraph (b)(1) of this section by a practitioner or non-practitioner may jeopardize the validity of the application or document, or the validity or enforceability of any patent, trademark registration, or certificate resulting therefrom. Violations of any of paragraphs (b)(2)(i) through (iv) of this section are, after notice and reasonable opportunity to respond, subject to such sanctions as deemed appropriate by the Commissioner, or the Commissioner's designee, which may include, but are not limited to, any combination of —
(1) Holding certain facts to have been established;
(2) Returning papers;
(3) Precluding a party from filing a paper, or presenting or contesting an issue;
(4) Imposing a monetary sanction;
(5) Requiring a terminal disclaimer for the period of the delay; or
(6) Terminating the proceedings in the Patent and Trademark Office.
(d) Any practitioner violating the provisions of this section may also be subject to disciplinary action. See § 10.23(c)(15).
[Added 50 FR 5175, Feb. 6, 1985, effective Mar. 8, 1985; para. (a) revised, 58 FR 54494, Oct. 22, 1993, effective Nov. 22, 1993; paras. (a) & (b) revised, paras. (c) & (d) added, 62 FR 53131, Oct. 10, 1997, effective Dec. 1, 1997; para. (a) revised, 69 FR 56481, Sept. 21, 2004, effective Oct. 21, 2004]

[3] 35 U.S.C. §133 provides:
35 U.S.C. §133 Time for prosecuting application.
Upon failure of the applicant to prosecute the application within six months after any action therein, of which notice has been given or mailed to the applicant, or within such shorter time, not less than thirty days, as fixed by the Commissioner in such action, the application shall be regarded as abandoned by the parties thereto, unless it be shown to the satisfaction of the Commissioner that such delay was unavoidable.

Delays in responding properly raise the question whether delays are unavoidable.[4] Where there is a question whether the delay was unavoidable, Petitioners must meet the burden of establishing that the delay was unavoidable within the meaning of 35 U.S.C. §133 and 37 C.F.R. §1.137(a).[5]

And the Petitioner must be diligent in attending to the matter.[6] Failure to do so does not constitute the care required under Pratt, and so cannot satisfy the test for diligence and due care.

(By contrast, unintentional delays are those that do not satisfy the very strict statutory and regulatory requirements of unavoidable delay, and also, by definition, are not intentional.[7]))

Allegations as to the Request to
Withdraw the Holding of Abandonment

The courts have determined the construct for properly supporting a petition seeking withdrawal of a holding of abandonment.[8]

The commentary at MPEP §711.03(c) provides in pertinent part:

* * *

> **B. Petition To Withdraw Holding of Abandonment Based on Evidence That a Reply Was Timely Mailed or Filed**
>
> 37 C.F.R. §1.10(c) through §1.10(e) and §1.10(g) set forth procedures for petitioning the Director of the USPTO to accord a filing date to correspondence as of the date of deposit of the correspondence as "Express Mail." A petition to withdraw the holding of abandonment relying upon a timely reply placed in "Express Mail" must include an appropriate petition under 37 C.F.R. §1.10(c), (d), * (e), or (g) (see MPEP § 513). When a paper

---

[4] See: *Changes to Patent Practice and Procedure*; *Final Rule Notice*, 62 *Fed. Reg.* at 53158-59 (October 10, 1997), 1203 *Off. Gaz. Pat. Office* at 86-87 (October 21, 1997).

[5] See: In re Application of G, 11 USPQ2d 1378, 1380 (Comm'r Pats. 1989).

[6] See: Diligence in Filing Petitions to Revive and Petitions to Withdraw the Holding of Abandonment, 1124 Off. Gaz. Pat. Office 33 (March 19, 1991). It was and is Petitioner's burden to exercise diligence in seeking either to have the holding of abandonment withdrawn or the application revived. See 1124 Off. Gaz. Pat. Office supra.

[7] Therefore, by example, an unintentional delay in the reply might occur if the reply and transmittal form are to be prepared for shipment by the US Postal Service, but other pressing matters distract one's attention and the mail is not timely deposited for shipment.

[8] See: Delgar v. Schulyer, 172 USPQ 513 (D.D.C. 1971).

is shown to have been mailed to the Office using the "Express Mail" procedures, the paper must be entered in PALM with the "Express Mail" date.

Similarly, applicants may establish that a reply was filed with a postcard receipt that properly identifies the reply and provides *prima facie* evidence that the reply was timely filed. See MPEP § 503. For example, if the application has been held abandoned for failure to file a reply to a first Office action, and applicant has a postcard receipt showing that an amendment was timely filed in response to the Office action, then the holding of abandonment should be withdrawn upon the filing of a petition to withdraw the holding of abandonment. When the reply is shown to have been timely filed based on a postcard receipt, the reply must be entered into PALM using the date of receipt of the reply as shown on the post card receipt.

Where a certificate of mailing under 37 C.F.R. §1.8, but not a postcard receipt, is relied upon in a petition to withdraw the holding of abandonment, see 37 C.F.R. §1.8(b) and MPEP § 512. As stated in 37 C.F.R §1.8(b)(3) the statement that attests to the previous timely mailing or transmission of the correspondence must be on a personal knowledge basis, or to the satisfaction of the Director of the USPTO. If the statement attesting to the previous timely mailing is not made by the person who signed the Certificate of Mailing (i.e., there is no personal knowledge basis), then the statement attesting to the previous timely mailing should include evidence that supports the conclusion that the correspondence was actually mailed (e.g., copies of a mailing log establishing that correspondence was mailed for that application). When the correspondence is shown to have been timely filed based on a certificate of mailing, the correspondence is entered into PALM with the actual date of receipt (i.e., the date that the duplicate copy of the papers was filed with the statement under 37 C.F.R. §1.8).

37 C.F.R. §1.8(b) also permits applicant to notify the Office of a previous mailing or transmission of correspondence and submit a statement under 37 C.F.R. 1.8(b)(3) accompanied by a duplicate copy of the correspondence when a reasonable amount of time (e.g., more than one month) has elapsed from the time of mailing or transmitting of the correspondence. Applicant does not have to wait until the application becomes abandoned before notifying the Office of the previous mailing or transmission of the correspondence. Applicant should check the private Patent

> Application Information Retrieval (PAIR) system for the status of the correspondence before notifying the Office. See MPEP § 512.
> * * *

And the regulation requires that relief be sought within two (2) months of the act complained of.

Petitioner appears to have satisfied the showing requirements herein.

CONCLUSION

The petition as considered under 37 C.F.R. §1.181 is **granted** and the 27 September, 2007, Notice of Abandonment is **vacated**.

The instant application is released to Technology Center 1600 for further processing in due course.

While telephone inquiries regarding this decision may be directed to the undersigned at (571) 272-3214, it is noted that all practice before the Office is in writing (see: 37 C.F.R. §1.2[9]) and the proper authority for action on any matter in this regard are the statutes (35 U.S.C.), regulations (37 C.F.R.) and the commentary on policy (MPEP). Therefore, no telephone discussion may be controlling or considered authority for Petitioner's action(s).

John J. Gillon, Jr.
Senior Attorney
Office of Petitions

---

[9] The regulations at 37 C.F.R. §1.2 provide:
§1.2 Business to be transacted in writing.
All business with the Patent and Trademark Office should be transacted in writing. The personal attendance of applicants or their attorneys or agents at the Patent and Trademark Office is unnecessary. The action of the Patent and Trademark Office will be based exclusively on the written record in the Office. No attention will be paid to any alleged oral promise, stipulation, or understanding in relation to which there is disagreement or doubt.

UNITED STATES PATENT AND TRADEMARK OFFICE

Commissioner for Patents
United States Patent and Trademark Office
P.O. Box 1450
Alexandria, VA 22313-1450
www.uspto.gov

Paper No.

FISH & RICHARDSON P.C.
P.O. BOX 1022
MINNEAPOLIS MN 55440-1022

COPY MAILED

JUL 07 2009

OFFICE OF PETITIONS

In re Patent No. 7,406,599	:	
James D. Pravetz	:	DECISION ON PETITIONS
Issue Date: July 29, 2008	:	under 37 CFR 1.183 and
Application No. 10/819,703	:	ON REQUEST FOR
Filed: April 6, 2004	:	RECONSIDERATION OF
Attorney Docket No. 07844-652001	:	PATENT TERM ADJUSTMENT
/ P605	:	

This is a decision on the 1) Petition under 37 C.F.R. 1.183, requesting that the Office suspend the rules and consider on the merits a Request for Reconsideration of Patent Term Adjustment under 37 C.F.R. 1.705(d) filed more than two months from the date the above-referenced patent issued, and on the 2) Request for Reconsideration of Patent Term Adjustment under 37 C.F.R. 1.705(d), each of which was filed on December 2, 2008.

The petition under 37 CFR 1.183 is **dismissed**.

The request for reconsideration of patent term adjustment under 37 CFR 1.705(d) is **dismissed as untimely filed**.

Any request for reconsideration, whether directed to the decision on petition under 37 CFR 1.183 or to the decision on application for patent term adjustment under 37 CFR 1.705(d), must be filed within two months of the mailing date of this decision. Extensions of time under 37 CFR 1.136 are not permitted. See § 1.181(f).

BACKGROUND

On July 29, 2008, the above-identified application matured into U.S. Patent No. 7,406,599, with a revised patent term adjustment of 707 days. No request for reconsideration of the patent term adjustment indicated in the patent was filed within two months of the date the patent issued. Patentee now petitions under 37 C.F.R. § 1.183 to (i) suspend or waive the requirement of 37 C.F.R. § 1.705(d) that a Request for Reconsideration of Patent Term Adjustment be filed within two months of the date the patent issued; and (ii) consider the enclosed Request for Reconsideration of Patent Term Adjustment. Patentee makes this request, as this patent issued prior to the issuance of the decision in Wyeth v. Dudas, 580 F. Supp. 2d 138, 88 U.S.P.Q. 2d 1538 (D.D.C. 2008).[1]

ON PETITION UNDER 37 CFR 1.183
TO WAIVE THE TWO-MONTH REQUIREMENT OF 37 CFR 1.705(d)

The above-referenced patent issued on July 29, 2008. A request for reconsideration of the patent term adjustment indicated in the patent was not filed until December 2, 2008. Petitioner requests that the Office suspend the rules and consider on the merits the Request for Reconsideration of Patent Term Adjustment under 37 C.F.R. 1.705(d) even though it was untimely filed more than two months from the date the patent issued.

The relevant regulation, 37 CFR 1.705(d), provides that:

> If there is a revision to the patent term adjustment indicated in the notice of allowance, the patent will indicate the revised patent term adjustment. If the patent indicates or should have indicated a revised patent term adjustment, *any request for reconsideration of the patent term adjustment indicated in the patent must be filed within two months of the date the patent issued* and must comply with the requirements of paragraphs (b)(1) and (b)(2) of this section. Any request for reconsideration under this section that raises issues that were raised, or could have been raised, in an application for patent term adjustment under paragraph (b) of this section shall be dismissed as untimely as to those issues. (*emphasis* added).

By the express provisions of 37 CFR 1.705(d), a request for reconsideration of patent term adjustment must be filed within two months of the date the patent issued. It is undisputed that no such request for reconsideration was filed by September 29, 2008, the date two months from the date this patent issued. Rather, on December 2, 2008, petitioner filed the instant request for waiver of the two-month requirement.

37 CFR 1.183 provides that:

> In an extraordinary situation, when justice requires, any requirement of the regulations in this part which is not a requirement of the statutes may be suspended or waived by the Director or the Director's designee, sua sponte, or on petition of the interested party, subject to such other requirements as may be imposed. Any petition under this section must be accompanied by the petition fee set forth in § 1.17(f).

Preliminarily, it is recognized that the two-month requirement of 37 CFR 1.705(d) is a requirement of the regulations and not a statutory requirement. The statute, 35 U.S.C. 154, requires the Office to provide the applicant one opportunity to request reconsideration of any patent term adjustment determination made by the Director. But, the statute allows the Director to establish the procedures for requesting such reconsideration. Those procedures[1] include pursuant to 37 CFR 1.705(d) setting a two-month period for filing a request for reconsideration of the

---

[1] 35 U.S.C. § 154(b)(3) provides that the USPTO shall: (1) prescribe regulations establishing procedures for the application for and determination of patent term adjustments under 35 U.S.C. § 154(b); (2) make a determination of any patent term adjustment under 35 U.S.C. § 154(b) and transmit a notice of that determination with the notice of allowance under 35 U.S.C. § 151; and (3) provide the applicant one opportunity to request reconsideration of any patent term adjustment determination. Pursuant to the mandate and authority in 35 U.S.C. § 154(b)(3), the USPTO promulgated 37 C.F.R. § 1.705, which provides that: (1) the notice of allowance will include notification of any patent term adjustment under 35 U.S.C. § 154(b)(37 C.F.R. § 1.705(a)); (2) any request for reconsideration of the patent term adjustment indicated in the notice of allowance (except as provided in 37 C.F.R. § 1.705(d)) must be by way of an application for patent term adjustment filed no later than the payment of the issue fee and accompanied by (inter alia) the fee set forth in 37 C.F.R. § 1.18(e)(37 C.F.R. § 1.705(b)); and (3) if the patent indicates or should have indicated a revised patent term adjustment, any request for reconsideration of the patent term adjustment indicated in the patent must be filed within two months of the date the patent issued.

revised patent term adjustment indicated in the patent. As such, it is within the Director's authority to waive the two-month requirement.

Having considered petitioner's arguments, it is concluded that waiver of the two-month requirement is not warranted. The primary basis for requesting waiver set forth by petitioner is that the decision of *Wyeth v. Dudas*, No. 07-1492 (D.D.C. Sept. 30, 2008) occurred subsequent to the issuance of this patent.[2]

First, the issuance of the Wyeth Opinion is not an extraordinary situation. Wyeth followed the procedure set forth in 37 CFR 1.705 for requesting reconsideration of the patent term adjustment determination. Then, pursuant to 35 U.S.C. 154(b)(4)(A)[3], Wyeth timely filed a complaint in District Court seeking judicial review of the Office's decision. A Memorandum Opinion and Order, the Wyeth decision of September 30, 2008, directed to the parties involved was issued.

The fact that any relief ultimately granted in Wyeth would benefit patentee had they timely filed a request for reconsideration does not make the situation extraordinary. Petitioner chose not to challenge their revised patent term adjustment within the two-month period. It appears that Petitioner has implied that a Request for Reconsideration of Patent Term Adjustment could not have been filed within two months of the date the above-referenced patent issued, because the basis for the Request for Reconsideration of Patent Term Adjustment is the Wyeth decision, which was not issued until more than two months after the issuance of this patent. This argument is not compelling. Petitioner could have filed a Request for Reconsideration of Patent Term Adjustment as Wyeth did. It is acknowledged that petitioner may have chose not to file a request for reconsideration based on a conclusion that the Office's interpretation of 35 U.S.C. § 154(b)(2)(A) was correct. Nonetheless, the fact that the District Court has now

---

[2] Petition, page 1.

[3] 35 U.S.C. 154(b)(4) (A) APPEAL OF PATENT TERM ADJUSTMENT DETERMINATION. — (A) An applicant dissatisfied with a determination made by the Director under paragraph (3) shall have remedy by a civil action against the Director filed in the United States District Court for the District of Columbia within 180 days after the grant of the patent. Chapter 7 of title 5 shall apply to such action. Any final judgment resulting in a change to the period of adjustment of the patent term shall be served on the Director, and the Director shall thereafter alter the term of the patent to reflect such change.

issued an Opinion contrary to the Office's interpretation does not make the situation extraordinary. This is not unlike any other situation where a patentee (or applicant) challenges a final agency decision and the decision upon judicial review could have had applicability to another patentee (or applicant) had they taken such action. In fact, many patentees may be in the same situation as petitioner with respect to the Wyeth decision.

Second, Petitioner, if not on notice by established principles of administrative law, was on notice by the Office's issuance of the above-cited Opinion that failure to file a request for reconsideration of patent term adjustment within the two-month period as required would likely foreclose their right to judicial relief. Yet they chose to not to file a request for reconsideration within the two-month period. This consequence of their failure does not render the failure an extraordinary situation warranting waiver of the two-month requirement. The key consideration in determining whether waiver is warranted is whether the circumstance that led to petitioner failing to meet the two-month requirement was an extraordinary situation where justice requires waiver.

Petitioner simply fails to articulate how their failure to file a request for reconsideration of patent term adjustment within two months of the issue date of the patent was due to an extraordinary situation. Petitioner cannot rely on Wyeth's actions or the Wyeth decision to establish that their situation was extraordinary.

Third, justice does not require waiver of the two-month requirement. Justice requires that the Office continue to devote its resources to the adjudication of timely filed requests for reconsideration under 37 CFR 1.705(b) and (d). Further, upon ultimate resolution of the interpretation of 37 CFR 1.702, justice requires that the Office determine consistent with relevant law and practice, and appropriate Court or legislative guidance, the applicability of any changes as to all affected patentees who failed to timely seek administrative remedy, and thus, could not seek judicial review.

It is noted that this petition was filed more than two months after the Wyeth decision and more than four months after the issuance of the patent. Given that the law only allows 180-days for both the filing of a petition and for the Office's

consideration of that petition, Petitioner's unexplained more than two-month delay in filing the petition weighs against them.

In view thereof, the petition under 37 CFR 1.183 for waiver of the two-month requirement of 37 CFR 1.705(d) is **dismissed**.

Accordingly, consideration now turns to the Request for Reconsideration of Patent Term Adjustment under 37 CFR 1.705(d).

ON REQUEST FOR RECONSIDERATION OF PATENT TERM ADJUSTMENT UNDER 37 CFR 1.705(d)

This is a decision on the "APPLICATION FOR PATENT TERM ADJUSTMENT UNDER 37 CFR 1.705(d)," filed December 2, 2008. Therein, patentee requests correction of the patent term adjustment (PTA) indicated in the patent to one thousand, one hundred and eighteen (1118) days.

On July 29, 2008, the above-identified application matured into U.S. Patent No. 7,406,599 with a revised patent term adjustment of 707 days. The instant request for reconsideration was filed more than four months after the issuance of the patent, on December 2, 2008.

No error in the printing of the patent has been shown. The patent term adjustment indicated on the patent reflects the Office's determination of patent term adjustment shown in the PAIR system for this application. 37 CFR 1.705(d) provides the sole avenue before the Office for requesting reconsideration of the Office's determination of patent term adjustment indicated in the patent. Moreover, § 1.705(d) states that "any request for reconsideration of the patent term adjustment indicated in the patent must be filed within two months of the date the patent issued and must comply with the requirements of paragraphs (b)(1) and (b)(2) of this section." Since the request was not filed within two months of the issue date of the patent, the request is properly **dismissed as untimely filed**.

CONCLUSION

It is determined that waiver of the requirement pursuant to 37 CFR 1.183 is not warranted. Accordingly, the request for reconsideration of the patent term adjustment under 37 CFR

1.705(d) filed more than two months after the issue date of the patent is dismissed as untimely filed.

Telephone inquiries specific to this matter should be directed to Paul Shanoski, Senior Attorney, at (571) 272-3225.

Nancy Johnson

Kery A. Fries
Senior Legal Advisor
Office of Patent Legal Administration

UNITED STATES PATENT AND TRADEMARK OFFICE

Commissioner for Patents
United States Patent and Trademark Office
P.O. Box 1450
Alexandria, VA 22313-1450
www.uspto.gov

CHRISTENSEN, O'CONNOR,
JOHNSON, KINDNESS, PLLC
1420 FIFTH AVENUE
SUITE 2800
SEATTLE WA 98101-2347

MAILED

MAY 26 2009

OFFICE OF PETITIONS

In re Application of

Greg Ritke

Application No. 10/819,719

Filed: April 7, 2004

Attorney Docket No. RITG122726

DECISION ON PETITION

This is a decision on the petition under 37 CFR 1.137(b), filed April 30, 2009, to revive the above-identified application.

The petition is **GRANTED**.

This application became abandoned for failure to file a proper and timely response to the final Office action mailed December 29, 2008, which set a shortened statutory period for reply of three-months from its mailing date. A response was not received within the allowable period and the application became abandoned on March 30, 2009. A Notice of Abandonment was mailed on July 17, 2007.

The Request for Continued Examination filed April 30, 2009, is noted.

The application file is being forwarded to Technology Center 3600, GAU 3671 for further processing.

Telephone inquiries concerning this decision should be directed to the undersigned at (571) 272-3222.

Kenya A. McLaughlin
Petitions Attorney
Office of Petitions

UNITED STATES PATENT AND TRADEMARK OFFICE

Commissioner for Patents
United States Patent and Trademark Office
P.O. Box 1450
Alexandria, VA 22313-1450
www.uspto.gov

JAMES D HALL
BOTKIN & HALL LLP
105 E JEFFERSON BLVD
SUITE 400
SOUTH BEND IN 46601

COPY MAILED
JAN 05 2006
OFFICE OF PETITIONS

In re Application of	:
Jack Champaigne	: DECISION GRANTING PETITION
Application No. 10/819,728	: AND WITHDRAWING THE
Filed: April 7, 2003	: HOLDING OF ABANDONMENT
Attorney Docket No. 150-006.001	:
Electronics	

This is a decision on the "PETITION TO WITHDRAW HOLDING OF ABANDONMENT", filed September 22, 2005, which is being treated as a petition under 37 CFR 1.181.

The petition under 37 CFR 1.181 is **GRANTED**.

The holding of abandonment is **WITHDRAWN**.

The above-identified application became abandoned for failure to timely file a response to the non-final Office action mailed February 8, 2005. This Office action set a shortened statutory period for reply of three (3) months. No response having been received, the above-identified application became abandoned on May 9, 2005. A Notice of Abandonment was mailed on September 16, 2005.

Petitioner asserts that he did file a timely response. In support thereof, petitioner has submitted a copy of the response, together with a postcard receipt, itemizing a "Response to Office Action", and bearing a USPTO date stamp dated May 4, 2005. However, the postcard receipt and the response were directed to application no. 60/461,845, not 10/819,728.

Nevertheless, as set forth in the Manual of Patent Examining Procedure § 724.05:

> Where the Office can determine the correct application file that the papers were actually intended for, based on identifying information in the heading of the papers (e.g. application number, filing date, title of invention and inventor(s) name(s)), the Office will transfer the papers to the correct application file for which they were intended without the need of a petition.

It is clear that while the response was directed to the provisional application, it was intended for the nonprovisional application. In the future, applicant is reminded to direct replies to the nonprovisional applications to which they are intended, not their corresponding provisional applications.

Given the basis for granting this petition, no petition fee was required, and none has been charged.

The application file is being forwarded to Group Art Unit 3723 for consideration of the response filed May 4, 2005 (copy re-supplied with the petition filed September 22, 2005).

Telephone inquiries related to this decision should be directed to the undersigned at (571)272-3207.

Cliff Congo
Petitions Attorney
Office of Petitions

UNITED STATES PATENT AND TRADEMARK OFFICE

Commissioner for Patents
United States Patent and Trademark Office
P.O. Box 1450
Alexandria, VA 22313-1450
www.uspto.gov

SIEMENS CORPORATION
INTELLECTUAL PROPERTY DEPARTMENT
170 WOOD AVENUE SOUTH
ISELIN, NJ 08830

COPY MAILED

APR 2 5 2005

OFFICE OF PETITIONS

In re Application of	:	
James, Robert	:	
Application No. 10/819,734	:	ON PETITION
Filed: April 7, 2004	:	
Attorney Docket No. 2004P05841US	:	

This is a decision on the petition under 37 C.F.R. § 1.137(b), filed April 11, 2005, to revive the above-identified application.

The petition is **GRANTED.**

The above-identified application became abandoned for failure to reply in a timely manner to the Notice to File Missing Parts of Application (Notice) mailed June 22, 2004. The Notice set a period for reply of two (2) months from the mail date of the Notice. No extensions of time under the provisions of 37 CFR 1.136(a) were obtained. Accordingly, the above-identified application became abandoned on August 23, 2004. A Notice of Abandonment was mailed on March 15, 2005.

Petitioner has met the requirements to revive the above-identified application pursuant to 37 CFR 1.137(b).

This matter is being referred to the Office of Initial Patent Examination for further processing.

Telephone inquiries regarding this decision should be directed to the undersigned at (571) 272-3282.

Liana Chase
Petitions Examiner
Office of Petitions
Office of the Deputy Commissioner
for Patent Examination Policy

UNITED STATES PATENT AND TRADEMARK OFFICE

Commissioner for Patents
United States Patent and Trademark Office
P.O. Box 1450
Alexandria, VA 22313-1450
www.uspto.gov

THE ESTEE LAUDER COS, INC.
155 PINELAWN ROAD
STE 345 S
MELVILLE NY 11747

COPY MAILED

AUG 27 2007

OFFICE OF PETITIONS

In re Application of	:	
Liliana George et al	:	
Application No. 10/819,741	:	DECISION GRANTING PETITION
Filed: April 7, 2004	:	UNDER 37 CFR 1.137(b)
Attorney Docket No. 99.01 CON	:	

This is a decision on the petition under 37 CFR 1.137(b), filed March 23, 2007, to revive the above-identified application.

The petition is **GRANTED**.

The petition satisfies the conditions for revival pursuant to the provisions of 37 CFR 1.137(b) in that (1) the reply in the form of an election/amendment; (2) the petition fee; and (3) the required statement of unintentional delay have been received. Accordingly, the reply to the Restriction Requirement of September 19, 2006, is accepted as having been unintentionally delayed.

Telephone inquiries concerning this decision should be directed to the undersigned at (571) 272-3208.

This matter is being referred to Technology Center AU 1712.

Karen Creasy

Karen Creasy
Petitions Examiner
Office of Petitions

UNITED STATES PATENT AND TRADEMARK OFFICE

UNITED STATES DEPARTMENT OF COMMERCE
United States Patent and Trademark Office
Address: COMMISSIONER FOR PATENTS
P.O. Box 1450
Alexandria, Virginia 22313-1450
www.uspto.gov

POLYONE CORPORATION
33587 WALKER ROAD
AVON LAKE, OH 44012

Mail Date: 04/21/2010

Applicant	: Tito Viswanathan	: DECISION ON REQUEST FOR
Patent Number	: 7063808	: RECALCULATION of PATENT
Issue Date	: 06/20/2006	: TERM ADJUSTMENT IN VIEW
Appliction No	: 10/819,742	: OF WYETH
Filed	: 04/07/2004	:
		:

The Patentee's Request for Recalculation is **DISMISSED.**

This Request is deemed ineligible for consideration for one or more of the following reasons:

(A). The patent for which PTA recalculation is requested is either a design or reissue application or is a reexamination proceeding;

(B). The patent for which PTA recalculation is requested resulted from a utility or plant application filed under 35 USC 111(a) before May 29, 2000 and no CPA filed in the application on/after May 29, 2000;

(C). The patent for which PTA recalculation is requested resulted from an international application in which the international filing date was before May 29, 2000 and no CPA filed in the application on/after May 29, 2000;

(D). The patent for which PTA recalculation is requested issued on/after March 2, 2010;

(E). The Request for Recalculation was filed more than 180 days after the grant date of the patent and the request was not filed within two months of a dismissal of a request for reconsideration of the of the patent term under 37 CFR 1.705(d);

(F). The Request for Recalculation is not solely limited to USPTO pre-Wyeth interpretation of 35 U.S.C. 154(b)(2)(A);

or

(G). A civil action was filed pursuant to 35 U.S.C. 154(b)(4)(A)concerning the same patent at issue in this request.

Patentee may file a reply to this decision dismissing the Request for Recalculation. Patentee must file such reply within one month or thirty days, whichever is longer, of the mail date of the decision dismissing the Request for Recalculation. No fee is required if patentee is asserting in the reply that the dismissal for ineligibility is improper.

Patentee should use document code PET.OP if electronically filing a reply to this dismissal. If the USPTO finds that the request was improperly deemed ineligible, the USPTO will mail applicant a recalculation determination.

Patentee should be aware that in order to preserve the right to review in the United States District Court for the District of Columbia of the USPTO patent term adjustment determination, patentee must ensure that he or she also take the steps required under 35 U.S.C. 154(b)(4)(A). Nothing in the request for recalculation should be construed as providing an alternative time frame for commencing a civil action under 35 U.S.C. 154 (b)(4)(A).

Any questions concerning this decision should be directed to the Office of Patent Legal Administration at 571-272-7702.

SPE RESPONSE FOR CERTIFICATE OF CORRECTION

Paper No.: —

DATE : 3/3/09

TO SPE OF : ART UNIT 2853

SUBJECT : Request for Certificate of Correction for Appl. No.: 10/819756 Patent No.: 7350907B2

Please respond to this request for a certificate of correction within 7 days.

FOR IFW FILES:

Please review the requested changes/corrections as shown in the **COCIN** document(s) in the IFW application image. No new matter should be introduced, nor should the scope or meaning of the claims be changed.

Please complete the response (see below) and forward the completed response to scanning using document code **COCX**.

FOR PAPER FILES:

Please review the requested changes/corrections as shown in the attached certificate of correction. Please complete this form (see below) and forward it with the file to:

Certificates of Correction Branch (CofC)
South Tower - 9A22
Palm Location 7580

Virginia Tolbert
Certificates of Correction Branch
703-308-9390 ext. 113

Thank You For Your Assistance

The request for issuing the above-identified correction(s) is hereby:
Note your decision on the appropriate box.

- ☒ Approved — All changes apply.
- ☐ Approved in Part — Specify below which changes do not apply.
- ☐ Denied — State the reasons for denial below.

Comments: Entered

STEPHEN MEIER
~~SUPERVISORY PATENT EXAMINER~~
SPE

2853
Art Unit

PTOL-306 (REV. 7/03)

U.S. DEPARTMENT OF COMMERCE Patent and Trademark Office

UNITED STATES PATENT AND TRADEMARK OFFICE

Commissioner for Patents
United States Patent and Trademark Office
P.O. Box 1450
Alexandria, VA 22313-1450
www.uspto.gov

HAYNES AND BOONE, LLP
IP SECTION
2323 VICTORY AVENUE
SUITE 700
DALLAS TX 75219

MAILED
JUN 01 2010
OFFICE OF PETITIONS

In re Patent No. 7,104,318 :
Issue Date: September 12, 2006 :
Application No. 10/819,778 : NOTICE
Filed: April 7, 2004 :
Attorney Docket No. 44431.27 :

This is a notice regarding your request for acceptance of a fee deficiency submission under 37 CFR 1.28. On September 1, 1998, the Court of Appeals for the Federal Circuit held that 37 CFR 1.28(c) is the sole provision governing the time for correction of the erroneous payment of the issue fee as a small entity. **See DH Technology v. Synergystex International, Inc. 154 F.3d 1333, 47 USPQ2d 1865 (Fed. Cir. Sept. 1, 1998).**

The Office no longer investigates or rejects original or reissue applications under 37 CFR 1.56. **1098 Off. Gaz. Pat. Office 502 (January 3, 1989)**. Therefore, nothing in this Notice is intended to imply that an investigation was done.

Your fee deficiency submission under 37 CFR 1.28 is hereby **NOT ACCEPTED**.

The fee deficiency cannot be accepted because no itemization has been submitted, as required by 37 CFR 1.28(C) (ii) which states:

(2) Payment of deficiency owed. The deficiency owed, resulting from the previous erroneous payment of small entity fees, must be paid.

(ii) *Itemization of the deficiency payment.* An itemization of the total deficiency payment is required. The itemization must include the following information:

(A) Each particular type of fee that was erroneously paid as a small entity, (e.g., basic statutory filing fee, two-month extension of time fee) along with the current fee amount for non-small entity;

(B) The small entity fee actually paid, and when. This will permit the Office to differentiate, for example, between two one-month extension of time fees erroneously paid as a small entity but on different dates;

(C) The deficiency owed amount (for each fee erroneously paid); and

(D) The total deficiency payment owed, which is the sum or total of the individual deficiency owed amounts set forth in paragraph (c)(2)(ii)(C) of this section.

As indicated above, the three and one half year maintenance fee must be properly itemized.

This itemization must be provided within one (1) month of the mail date of this decision to avoid the return of the deficiency payment. See 37 CFR 1.28 (c)(3). No extension of this 1-month time limit will be granted under 37 CFR 1.136(a).

Inquiries related to this communication should be directed to Diane Goodwyn at (571) 272-6735.

Thurman K. Page

Thurman K. Page
Petitions Examiner
Office of Petitions

UNITED STATES PATENT AND TRADEMARK OFFICE

Commissioner for Patents
United States Patent and Trademark Office
P.O. Box 1450
Alexandria, VA 22313-1450
www.uspto.gov

HAYNES AND BOONE, LLP
IP SECTION
2323 VICTORY AVENUE
SUITE 700
DALLAS TX 75219

MAILED

JUL 07 2010

OFFICE OF PETITIONS

In re Patent No. 7,104,318	:	
Issue Date: September 12, 2006	:	
Application No. 10/819,778	:	NOTICE
Filed: April 7, 2004	:	
Attorney Docket No. 44431.27	:	

This is a notice regarding your request for acceptance of a fee deficiency submission under 37 CFR 1.28. On September 1, 1998, the Court of Appeals for the Federal Circuit held that 37 CFR 1.28(c) is the sole provision governing the time for correction of the erroneous payment of the issue fee as a small entity. **See DH Technology v. Synergystex International, Inc. 154 F.3d 1333, 47 USPQ2d 1865 (Fed. Cir. Sept. 1, 1998).**

The Office no longer investigates or rejects original or reissue applications under 37 CFR 1.56. **1098 Off. Gaz. Pat. Office 502 (January 3, 1989)**. Therefore, nothing in this Notice is intended to imply that an investigation was done.

Your fee deficiency submission under 37 CFR 1.28 is hereby **ACCEPTED**.

This application is no longer entitled to small entity status. Accordingly, all future fees paid in this application must be paid at the large entity rate.

Inquiries related to this communication should be directed to Diane C. Goodwyn at (571) 272-6735.

Thurman K. Page

Thurman K. Page
Petitions Examiner
Office of Petitions

UNITED STATES PATENT AND TRADEMARK OFFICE

Commissioner for Patents
United States Patent and Trademark Office
P.O. Box 1450
Alexandria, VA 22313-1450
www.uspto.gov

Jeffrey Karl Nanninga
15250 Simmons Ave.
Cedar Springs MI 49319

COPY MAILED

JUN 2 1 2007

OFFICE OF PETITIONS

In re Application of
Jeffrey Karl Nanninga
Application No. 10/819,829
Filed: April 7, 2004
Title: Nanninga Diesel

DECISION ON PETITION

This is a decision on the petition, filed June 2, 2007 which is being treated as a petition under 37 CFR 1.181, requesting withdrawal of the holding of abandonment in the above-identified application.

The petition is **GRANTED**.

This application was held abandoned for failure to timely respond to the Office action of April 4, 2005, which set a three (3) month shortened statutory period for reply. Accordingly, a reply was due on or before July 4, 2005.

Petitioner states that a timely reply was mailed via certificate of mailing on May 16, 2005, which included the following papers: specification, claims, abstract and drawings. Petitioner has not provided any evidence of the prior submission of the reply.

Nonetheless, the file record does include the originally submitted papers dated May 16, 2005.

Accordingly, the holding of abandonment for failure to timely file a reply to the Office action of April 4, 2005 is hereby withdrawn and the application restored to pending status.

This application is being referred to art unit 3747 for appropriate action in the normal course of business.

Telephone inquiries concerning this matter should be directed to the undersigned at (571) 272-3215.

Charlema R. Grant

Charlema R. Grant
Petitions Attorney
Office of Petitions

UNITED STATES PATENT AND TRADEMARK OFFICE

Commissioner for Patents
United States Patent and Trademark Office
P.O. Box 1450
Alexandria, VA 22313-1450
www.uspto.gov

COPY MAILED

JAN 30 2009

OFFICE OF PETITIONS

JEFFREY KARL NANNINGA
15250 SIMMONS AVE.
CEDAR SPRINGS, MI 49319

In re Application of	:	
Jeffrey Karl Nanninga	:	
Application No. 10/819,829	:	DECISION ON PETITION
Filed: April 8, 2004	:	
Attorney Docket No. None	:	

This is a decision on the petition under the unintentional provisions of 37 CFR 1.137(b), filed October 21, 2008, to revive the above-identified application.

This application became abandoned on January 11, 2008 for a failure to timely file a reply to the Office action of October 10, 2007, which set a shortened statutory period for reply of three (3) months. A Notice of Abandonment was mailed on June 19, 2008. On October 21, 2008, the present petition was filed.

The petition satisfies the requirements of 37 CFR 1.137(b) in that petitioner has supplied (1) the reply in the form of a Notice of Appeal; (2) the petition fee of $270; and (3) an adequate statement of unintentional delay. Accordingly, the petition is **GRANTED**.

The two-month period for filing an appeal brief under 37 CFR 41.37 (accompanied by the fee required by 37 CFR 41.20(b)(2)), runs from the date of this decision.

This application is being referred to Technology Center AU 3747 to await the filing of an appeal brief or for such other appropriate reply as may be submitted to continue prosecution of the application.

Telephone inquiries concerning this decision may be directed to the undersigned at (571) 272-3204. Inquiries relating to the prosecution of the application should be referred to the Technology Center.

Sherry D. Brinkley
Petitions Examiner
Office of Petitions

UNITED STATES PATENT AND TRADEMARK OFFICE

Commissioner for Patents
United States Patent and Trademark Office
P.O. Box 1450
Alexandria, VA 22313-1450
www.uspto.gov

COPY MAILED

NOV 1 2 2009

OFFICE OF PETITIONS

Jeffrey Karl Nanninga
15250 Simmons Ave.
Cedar Springs, MI 49319

In re Application of	:	
Jeffrey Karl Nanninga	:	
Application No. 10/819,829	:	ON PETITION
Filed: April 7, 2004	:	
Attorney Docket No.	:	

This is in response to the communication, filed April 10, 2009, to revive the above-identified application, which is being treated as a petition to withdraw the holding of abandonment.

The petition is **DISMISSED**.

Any request for reconsideration of this decision should be submitted within two (2) months from the mail date of this decision and be entitled "Renewed Petition to Withdraw the Holding of Abandonment under 37 CFR 1.181." See 37 CFR 1.181(f).

On March 20, 2009, the Office mailed a Notification of Non-Compliant Appeal Brief, which set a one month or thirty days period to reply. The application became abandoned on April 20, 2009, for failure to submit a timely response to the Notification of Non-Compliant Appeal Brief.

In the present petition, petitioner requests that the Office withdraw the holding of abandonment.

A review of the record indicates no irregularity in the mailing of the March 20, 2009 Notification of Non-Compliant Appeal Brief, and in the absence of any irregularity in the mailing, there is a strong presumption that the Notification of Non-Compliant Appeal Brief was properly mailed to the address of record.

Office record show an Appeal Brief was received on August 20, 2009 which is after the April 20, 2009 abandonment date. Therefore, this application is abandon for failure to submit a timely response to the Notification of Non-Compliant Appeal Brief.

ALTERNATIVE VENUE

Petitioner is strongly encouraged to consider filing a petition under 37 CFR 1.137(b) to revive an unintentionally abandoned application instead of filing a renewed petition under 37 CFR 1.181 or a petition under 37 CFR 1.137(a).

A grantable petition pursuant to 37 CFR 1.137(b) must be accompanied by:

(1) The reply required to the outstanding Office action or notice, unless previously filed. In nonprovisional utility application abandoned for failure to respond to a non-final Office action, the required reply may be met by filing either (A) an argument or amendment under 37 CFR 1.111 or (B) a continuing application under 37 CFR 1.53(b).

(2) The petition fee as set forth in 37 CFR 1.17(m), $810.00 for a small entity;

(3) A statement that the entire delay in filing the required reply from the due date for the reply until the filing of a grantable petition was unintentional. The Director may require additional information where there is a question whether the delay was unintentional.

A form for filing a petition to revive an unintentionally abandoned application accompanies this decision for petitioner's convenience. If petitioner desires to file a petition under 37 CFR 1.137(b) instead of filing a request for reconsideration, petitioner must complete the enclosed petition form (PTO/SB/64) and pay the $810.00 petition fee.

Petitioner may wish to consider hiring a registered patent attorney or agent to assist in the prosecution of this application. Additionally, petitioner is encouraged to contact the Inventors Assistance Center (IAC) by telephone at 800-786-9199 or 571-272-1000, Monday through Friday from 8:30 AM to 5:30 PM (EST). The IAC provides patent information and services to the public and is staffed by former Supervisory Patent Examiners and experienced Primary Examiners who answer general questions concerning patent examining policy and procedure.

Further correspondence with respect to this matter should be addressed as follows:

By mail: Mail Stop Petition
Commissioner for Patents
P.O. Box 1450
Alexandria, VA 22313-1450

By FAX: (571) 273-8300
Attn: Office of Petitions

By hand: Customer Service Window
Randolph Building
401 Dulany Street
Alexandria, VA 22314

Telephone inquiries related to this decision may be directed to the undersigned at (571) 272-3210.

Irvin Dingle
Petitions Examiner
Office of Petitions

Enclosures: Petition For Revival Of An Application For Patent Abandoned Unintentionally Under 37 CFR 1.137(b); Form PTO/SB/64, Privacy Act Statement.

UNITED STATES PATENT AND TRADEMARK OFFICE

Commissioner for Patents
United States Patent and Trademark Office
P.O. Box 1450
Alexandria, VA 22313-1450
www.uspto.gov

JEFFREY KARL NANNINGA
15250 SIMMONS AVE.
CEDAR SPRINGS, MI 49319

COPY MAILED

NOV 23 2009

OFFICE OF PETITIONS

In re Application of	:	
Jeffrey Karl Nanninga	:	
Application No. 10/819,829	:	DECISION ON PETITION
Filed: April 7, 2004	:	
Attorney Docket No.	:	

This is a decision on the petition, filed November 18, 2009, which is being treated as a petition under 37 CFR 1.181 (no fee), requesting withdrawal of the holding of abandonment in the above-identified application.

The petition is **GRANTED**.

This application was held abandoned for failure to timely respond to the Office action of March 20, 2009, which set a one (1) month period for reply. A reply was due on or before April 20, 2009.

Petitioner states that a reply was in fact timely filed. To support this assertion, petitioner has submitted a copy of a return postcard which acknowledges receipt by the U.S. Patent and Trademark Office (USPTO) on April 10, 2009. A copy of the previously submitted reply was submitted on August 20, 2009.

The Appeal Brief acknowledged as having been received in the USPTO on April 10, 2009 is not of record in the application file and has not to date been located. However, MPEP 503 states that "[a] post card receipt which itemizes and properly identifies the papers which are being filed serves as *prima facie* evidence of receipt in the USPTO of all the items listed thereon on the date stamped thereon by the USPTO." Accordingly, it is concluded that the Appeal Brief was timely received in the USPTO but lost after receipt thereof.

In view of the above, the holding of abandonment is hereby withdrawn and the application restored to pending status.

The copy of the reply supplied on August 20, 2009 will be accepted in place of the reply shown to have been received by the USPTO on April 10, 2009.

This application is being referred to Technology Center AU 3741 for appropriate action in the normal course of business on the reply received August 20, 2009.

Irvin Dingle
Petition Examiner
Office of Petitions

UNITED STATES PATENT AND TRADEMARK OFFICE

Commissioner for Patents
United States Patent and Trademark Office
P.O. Box 1450
Alexandria, VA 22313-1450
www.uspto.gov

WALLENSTEIN & WAGNER LTD
311 SOUTH WACKER DRIVE
53RD FLOOR
CHICAGO IL 60606

COPY MAILED

JAN 07 2008

OFFICE OF PETITIONS

ON PETITION

In re Application of :
Phillips, et al. :
Application No. 10/819,830 :
Filed: April 7, 2004 :
Attorney Docket No. 50243-001
:

This is a decision on the petition to revive under 37 CFR 1.137(a), filed July 30, 2007.

The petition under 37 CFR 1.137(a) is **GRANTED.**

The above-identified application was held abandoned for failure to timely file a reply in response to the non-final Office action mailed August 28, 2006. No reply having been received, the application became abandoned on November 29, 2006. A Notice of Abandonment was mailed on March 12, 2007.

A grantable petition under 37 CFR 1.137(a) must be accompanied by: (1) the required reply, unless previously filed; (2) the petition fee as set forth in 37 CFR 1.17(l); (3) a showing to the satisfaction of the Commissioner that the entire delay in filing the required reply from the due date for the reply until the filing of a grantable petition pursuant to 37 CFR 1.137(a) was unavoidable; and (4) any terminal disclaimer (and fee as set forth in 37 CFR 1.20(d)) required pursuant to 37 CFR 1.137(d). Decisions on reviving abandoned applications on the basis of "unavoidable" delay have adopted the reasonably prudent

person standard in determining if the delay was unavoidable:

> The word 'unavoidable' . . . is applicable to ordinary human affairs, and requires no more or greater care or diligence than is generally used and observed by prudent and careful men in relation to their most important business. It permits them in the exercise of this care to rely upon the ordinary and trustworthy agencies of mail and telegraph, worthy and reliable employees, and such other means and instrumentalities as are usually employed in such important business. If unexpectedly, or through the unforeseen fault or imperfection of these agencies and instrumentalities, there occurs a failure, it may properly be said to be unavoidable, all other conditions of promptness in its rectification being present.[1]

Moreover, a petition cannot be granted where a petitioner has failed to meet his or her burden of establishing that the delay was "unavoidable."[2]

Petitioner argues that he timely filed a reply on February 28, 2007, made timely by obtaining a three month extension of time. A review of the record confirms that petitioner did file an Amendment on March 5, 2007, made timely by including a Certificate of Mailing dated February 28, 2007, and by purchasing a three month extension of time.

In view of the above, the petition is granted.

The application is being forwarded to Group Art Unit 3632 for consideration of the Amendment filed March 5, 2007 (made timely with the three month extension of time an Certificate of Mailing dated February 28, 2007).

Telephone inquiries concerning this decision should be directed to the undersigned at (571)272-3207.

Cliff Congo
Petitions Attorney
Office of Petitions

---

[1] In re Mattullath, 38 App. D.C. 497, 514-15 (1912)(quoting Ex parte Pratt, 1887 Dec. Comm'r Pat. 31, 32-33 (1887)); see also Winkler v. Ladd, 221 F. Supp. 550, 552, 138 USPQ 666, 167-68 (D.D.C. 1963), aff'd, 143 USPQ 172 (D.C. Cir. 1963); Ex parte Henrich, 1913 Dec. Comm'r Pat. 139, 141 (1913).

[2] Haines v. Quigg, 673 F. Supp. 314, 316-17, 5 USPQ2d 1130, 1131-32 (N.D. Ind. 1987).

UNITED STATES PATENT AND TRADEMARK OFFICE

UNITED STATES DEPARTMENT OF COMMERCE
United States Patent and Trademark Office
Address: COMMISSIONER FOR PATENTS
P.O. Box 1450
Alexandria, Virginia 22313-1450
www.uspto.gov

Patent Group
Microsoft Corporation
One Microsoft Way
Redmond, WA 98052

Mail Date: 04/21/2010

Applicant	: Ying-Kin Tony Yip	: DECISION ON REQUEST FOR
Patent Number	: 7590669	: RECALCULATION of PATENT
Issue Date	: 09/15/2009	: TERM ADJUSTMENT IN VIEW
Appliction No	: 10/819,834	: OF WYETH AND NOTICE OF INTENT TO
Filed	: 04/06/2004	: ISSUE CERTIFICATE OF CORRECTION
		:

The Request for Recalculation is **GRANTED** to the extent indicated.

The patent term adjustment has been determined to be **780** days. The USPTO will *sua sponte* issue a certificate of correction reflecting the amount of PTA days determined by the recalculation.

Prior to the issuance of the certificate of correction, the USPTO will afford patentee an opportunity to be heard and request reconsideration. Accordingly, patentee has **one month or thirty (30) days**, whichever is longer, to file a request for reconsideration of this patent term adjustment calculation. See 35 U.S.C. 154(b)(3)(B)(ii) and 37 CFR 1.322(a)(4). No extensions of time will be granted under 37 CFR 1.136.

Patentee should use document code PET.OP if electronically filing a request for reconsideration of this patent term adjustment calculation. The patentee must also include the information required by 37 CFR 1.705(b)(2) and the fee required by 37 CFR 1.18(e). If patentee does not file a timely request for reconsideration of this patent term adjustment calculation including the information required by 37 CFR 1.705(b)(2) and the fee required by 37 CFR 1.18(e), the USPTO will issue a certificate of correction reflecting the PTA determination noted above.

Patentee should be aware that in order to preserve the right to review in the United States District Court for the District of Columbia of the USPTO patent term adjustment determination, patentee must ensure that he or she also take the steps required under 35 U.S.C. 154(b)(4)(A) in a timely manner. Nothing in the request for recalculation should be construed as providing an alternative time frame for commencing a civil action under 35 U.S.C. 154(b)(4)(A).

Any questions concerning this decision should be directed to the Office of Patent Legal Administration at 571-272-7702.

UNITED STATES PATENT AND TRADEMARK OFFICE

COMMISSIONER FOR PATENTS
UNITED STATES PATENT AND TRADEMARK OFFICE
P.O. BOX 1450
ALEXANDRIA, VA 22313-1450
www.uspto.gov

KEVIN L KLUG
ATTORNEY AT LAW
11237 CONCORD VILLAGE AVENUE
ST. LOUIS MO 63123-2273

MAILED

SEP 14 2005

DIRECTOR'S OFFICE
TECHNOLOGY CENTER 2600

In re Application of
HICKMAN, CARTER
Serial No.: **10/819,839**
Filed: April 7, 2004
For: **METHOD AND PROCESS FOR VIRTUAL PAINT APPLICATION**

DECISION ON PETITION TO ACCEPT COLOR DRAWINGS

This is a decision on the petition under 37 C.F.R. § 1.84(b)(2), filed, July 20, 2005, requesting acceptance of color drawings.

The petition requests that the color drawings identified in figures 1 –7 and 11 – 15, be accepted in lieu of black and white drawings.

A grantable petition under 37 C.F.R. §1.84(a)(2) must be accompanied by a fee set forth under 37 C.F.R. § 1.17(h), 3(three) set of the color drawings in question, and the specification must contain, or be amended to contain, the following language as the first paragraph in that portion of the specification relating to the brief description of the drawings:

"The file of this patent contains at least one drawing executed in color. Copies of this patent with color drawing(s) will be provided by the Patent and Trademark Office upon request and payment of the necessary fee."

The petition is **GRANTED.**

Dwayne Bost
Special Program Examiner
Technology Center 2600
Communications

MCKEE, VOORHEES & SEASE, PLC

ATTORNEYS AT LAW

801 GRAND AVENUE • SUITE 3200 • DES MOINES, IA 50309-2721
PHONE: 515-288-3667 • FAX: 515-288-1338 • www.ipmvs.com

RECEIVED
CENTRAL FAX CENTER
DEC 22 2004

DATE: December 22, 2004

TO: Art Unit 3744

COMPANY: USPTO

PHONE:

FAX: **703-872-9306**

FROM: KIRK M. HARTUNG

NUMBER OF PAGES (Including cover): 29

Please file the attached PETITION BY JOINT INVENTOR FILING ON BEHALF OF OTHER JOINT INVENTOR WHO REFUSES TO JOIN IN APPLICATION OR CANNOT BE REACHED (37 CFR 1.47(a)(b):

APPLICANT:	JENKINS et al.	GROUP ART NO:	3744
SERIAL NO:	10/819,869	EXAMINER:	
FILED:	April 7, 2004		
TITLE:	AIR TUNNEL DIVERTER AND METHOD OF INSTALLING SAME		

THE DOCUMENTS ACCOMPANYING THIS FACSIMILE TRANSMITTAL COVER SHEET CONTAIN INFORMATION FROM THE LAW FIRM OF McKEE, VOORHEES & SEASE WHICH MAY BE CONFIDENTIAL AND/OR LEGALLY PRIVILEGED. THE DOCUMENTS ARE INTENDED ONLY FOR THE PERSONAL AND CONFIDENTIAL USE OF THE ADDRESSEE IDENTIFIED ABOVE. IF YOU ARE NOT THE INTENDED RECIPIENT OR AN AGENT RESPONSIBLE FOR DELIVERING THESE DOCUMENTS TO THE INTENDED RECIPIENT, YOU ARE HEREBY NOTIFIED THAT ANY REVIEW, DISCLOSURE, COPYING, DISTRIBUTION OR THE TAKING OF ANY ACTION IN RELIANCE ON THE CONTENTS OF THIS TRANSMITTED INFORMATION IS STRICTLY PROHIBITED. IF YOU HAVE RECEIVED THIS FACSIMILE IN ERROR, PLEASE IMMEDIATELY NOTIFY THIS FIRM SO THAT WE CAN ARRANGE FOR THE RETURN OF THE ORIGINAL DOCUMENTS TO US. THANK YOU.

RECEIVED
CENTRAL FAX CENTER
DEC 2 2 2004

PTO/SB/21 (09-04)
Approved for use through 07/31/2006. OMB 0651-0031
U.S. Patent and Trademark Office; U.S. DEPARTMENT OF COMMERCE
Under the Paperwork Reduction Act of 1995, no persons are required to respond to a collection of information unless it displays a valid OMB control number.

TRANSMITTAL FORM

(to be used for all correspondence after initial filing)

Application Number	10/819,869
Filing Date	April 7, 2004
First Named Inventor	JENKINS, James H., Jr.
Art Unit	3744
Examiner Name	
Total Number of Pages in This Submission: 28	Attorney Docket Number: P05514US02

ENCLOSURES *(Check all that apply)*

- [ ] Fee Transmittal Form
  - [ ] Fee Attached
- [ ] Amendment/Reply
  - [ ] After Final
  - [ ] Affidavits/declaration(s)
- [x] Extension of Time Request
- [ ] Express Abandonment Request
- [ ] Information Disclosure Statement
- [ ] Certified Copy of Priority Document(s)
- [ ] Reply to Missing Parts/ Incomplete Application
  - [ ] Reply to Missing Parts under 37 CFR 1.52 or 1.53
- [ ] Drawing(s)
- [ ] Licensing-related Papers
- [x] Petition
- [ ] Petition to Convert to a Provisional Application
- [ ] Power of Attorney, Revocation Change of Correspondence Address
- [ ] Terminal Disclaimer
- [ ] Request for Refund
- [ ] CD, Number of CD(s) _____
  - [ ] Landscape Table on CD
- [ ] After Allowance Communication to TC
- [ ] Appeal Communication to Board of Appeals and Interferences
- [ ] Appeal Communication to TC (Appeal Notice, Brief, Reply Brief)
- [ ] Proprietary Information
- [ ] Status Letter
- [x] Other Enclosure(s) (please identify below):

Remarks

Petition by Joint Inventor Filing on Behalf of Other Joint Inventor Who Refuses to Join in Application or Cannot be Reached (37 CFR 1.47(a) (b)
Statement of Facts in Support of Filing on Behalf of Nonsigning Inventor (37 CFR 1.47)
Statement Establishing Proprietary Interest by Person Signing on Behalf of Nonsigning Inventor
Attachments to Support Petition to File on Behalf of Joint Inventor
Copy of Declaration and Power of Attorney
Please Charge Deposit Account 26-0084 for Extension Fees and All Petition Fees

SIGNATURE OF APPLICANT, ATTORNEY, OR AGENT

Firm Name	McKee, Voorhees & Sease, P.L.C.		
Signature	Kirk M. Hartung		
Printed name	KIRK M. HARTUNG		
Date	December 22, 2004	Reg. No.	31,021

CERTIFICATE OF TRANSMISSION/MAILING

I hereby certify that this correspondence is being facsimile transmitted to the USPTO or deposited with the United States Postal Service with sufficient postage as first class mail in an envelope addressed to: Commissioner for Patents, P.O. Box 1450, Alexandria, VA 22313-1450 on the date shown below:

Signature	Kirk M. Hartung		
Typed or printed name	KIRK M. HARTUNG	Date	December 22, 2004

This collection of information is required by 37 CFR 1.5. The information is required to obtain or retain a benefit by the public which is to file (and by the USPTO to process) an application. Confidentiality is governed by 35 U.S.C. 122 and 37 CFR 1.11 and1.14. This collection is estimated to 2 hours to complete, including gathering, preparing, and submitting the completed application form to the USPTO. Time will vary depending upon the individual case. Any comments on the amount of time you require to complete this form and/or suggestions for reducing this burden, should be sent to the Chief Information Officer, U.S. Patent and Trademark Office, U.S. Department of Commerce, P.O. Box 1450, Alexandria, VA 22313-1450. DO NOT SEND FEES OR COMPLETED FORMS TO THIS ADDRESS. SEND TO: **Commissioner for Patents, P.O. Box 1450, Alexandria, VA 22313-1450.**

If you need assistance in completing the form, call 1-800-PTO-9199 and select option 2.

UNITED STATES PATENT AND TRADEMARK OFFICE

COMMISSIONER FOR PATENTS
UNITED STATES PATENT AND TRADEMARK OFFICE
P.O. BOX 1450
ALEXANDRIA, VA 22313-1450
www.USPTO.GOV

Paper No. 12

MCKEE, VOORHEES & SEASE, P.L.C.
ATTN: MAYTAG
801 GRAND AVENUE, SUITE 3200
DES MOINES IA 50309-2721

COPY MAILED

SEP 0 9 2003

OFFICE OF PETITIONS

In re Application of
Jenkins & Seman
Application No.: 10/195,785
Filed: July 15, 2002
Attorney Docket No.: P05514US1
For: AIR TUNNEL DIVERTER AND METHOD OF INSTALLING SAME

DECISION ACCORDING STATUS UNDER 37 CFR 1.47(a)

This is a decision on the reconsideration petition under 37 CFR 1.47(a), filed August 22, 2003 via facsimile.

The petition is granted.

Petitioner has shown that the non-signing inventor, Richard Seman, has refused to join in the filing of the above-identified application after having been presented with the application papers. Specifically, the declaration of Brenda Dennison, Manager of Engineering Services, Refrigeration Products for Maytag Corp., establishes that the inventor was mailed the application papers and the declaration of Patricia J. Martin, Corporate Secretary and Deputy General Counsel for Maytag Corp., establishes that Mr. Seman refused to sign the declaration for this application. Petitioner has submitted a declaration in compliance with 37 CFR 1.63 and 1.64.

This application and papers have been reviewed and found in compliance with 37 CFR 1.47(a). This application is hereby accorded Rule 1.47(a) status.

As provided in Rule 1.47(c), this Office will forward notice of this application's filing to the non-signing inventor at the address given in the petition. Notice of the filing of this application will also be published in the Official Gazette.

After this decision is mailed, the above-identified application will be forwarded to Technology Center 1700 for examination in due course.

Telephone inquiries should be directed to the undersigned at (703) 308-6712.

E. Shirene Willis

E. Shirene Willis
Senior Petitions Attorney
Office of Petitions

UNITED STATES PATENT AND TRADEMARK OFFICE

Commissioner for Patents
United States Patent and Trademark Office
P.O. Box 1450
Alexandria, VA 22313-1450
www.uspto.gov

MCKEE, VOORHEES & SEASE, P.L.C.
ATTN: MAYTAG
801 GRAND AVENUE, SUITE 3200
DES MOINES IA 50309-2721

COPY MAILED

FEB 15 2005

OFFICE OF PETITIONS

In re Application of
Jenkins & Seman
Application No.: 10/819,869
Filed: April 7, 2004
Attorney Docket No.: P05514US02
For: AIR TUNNEL DIVERTER AND METHOD OF INSTALING SAME

DECISION REFUSING STATUS UNDER 37 CFR 1.47(a)

This is a decision on the petition under 37 CFR 1.47(b), filed December 22, 2004. Petitioner is reminded that when one joint inventor signs, the provisions of 37 CFR 1.47(a) apply. Where 37 CFR 1.47(a) is available, application cannot be made under 37 CFR 1.47(b). MPEP 409.03(b). Therefore, the petition will be treated under 37 CFR 1.47(a).

The petition under 37 CFR 1.47(a) is **DISMISSED**.

Any request for reconsideration of this decision must be submitted within TWO (2) MONTHS from the mail date of this decision. Extensions of time under 37 CFR 1.136(a) are permitted. Any response should be entitled "Request for Reconsideration of Petition Under 37 CFR 1.47(a)" and may include an oath or declaration executed by the inventor. **Failure to respond will result in abandonment of the application.**

The above-identified application was filed on April 7, 2004 without an executed oath or declaration. On June 22, 2004, a Notice to File Missing Parts of Nonprovisional Application was mailed. This Notice required applicants to file an executed declaration and a surcharge for its late filing within two months of the June 22, 2004 mail date of the Notice.

The instant petition was filed on December 22, 2004 with authorization to charge a 4 month extension of time and any required fees to petitioner's deposit account. Pursuant to petitioner's authorization, deposit account no. 26-0084 will be charged a $1,590.00 extension of time fee. In addition, the same deposit account will be charged the required $200.00 Rule 47 petition fee. The $130.00 late declaration surcharge has already been charged.

A grantable petition under 37 CFR 1.47(a) requires:

(1) a petition including proof of the pertinent facts establishing that the joint inventor(s) refuses to join, or cannot be found or reached after diligent effort,
(2) a proper oath or Declaration executed by the available joint inventor(s),
(3) the fee of $130 as specified in 37 CFR § 1.17(g), and
(4) the last known address of the omitted inventor(s).

This petition lacks items (1) and (2) above.

As to item (1), petitioner has failed to establish that the non-signing inventor, Richard F. Seman,

Sr., has refused to sign the declaration or cannot be reached. A successful Rule 47 petition requires either (1) a clear refusal to join, whether expressly or by conduct, or (2) a showing of diligence in trying to find an unavailable inventor.

The petition contains a statement of facts of Attorney Kirk M. Hartung. Attorney Hartung states that he spoke with a representative of Mr. Seman's current employer who refused to disclose Mr. Seman's e-mail address or fax number. The employer promised to call back, but did not do so.

It is unclear whether petitioner wishes to pursue a "refusal" or a "cannot be reached" rationale. Petitioner has enclosed a copy of a Rule 47 decision in a parent application based on Mr. Seman's refusal to sign that application's declaration. However, it is not permitted to transfer Rule 47 status to a continuation-in-part. MPEP 602.05(a).

Petitioner asserts that Mr. Seman cannot be reached, but the oath/declaration lists a last known address for Mr. Seman. The Office requires that petitioner mail a complete copy of the application to Mr. Semans's last known address. This includes the specification with claims, drawings, if any, and a declaration. See MPEP 409.03(d).

Mr. Seman must have the complete application in his possession in order to make an informed decision as to whether he joins in its filing. When petitioner can provide evidence that Mr. Seman received the complete application and that he either refused to sign the declaration or would not respond to the request that he sign the declaration within a reasonable amount of time, petitioner will have established refusal to join in the filing of the application.

Any written refusal to sign the declaration should be included as documentary evidence in any reconsideration petition. If there is an oral refusal, the facts surrounding the refusal should be included in a declaration by a party with first hand knowledge of the refusal. If it is concluded by the 37 CFR 1.47 applicant that a non-signing inventor's conduct constitutes a refusal, all facts upon which that conclusion is based should be stated in an affidavit or declaration.

If petitioner asserts that Mr. Seman cannot be located, a modified approach is required. A showing of **diligence** is critical in obtaining Rule 47 status when an inventor cannot be located or reached.

Petitioner should engage in efforts to locate Mr. Seman. As stated above, petitioner should send a copy of the application as filed to Mr. Seman's last known address. If it is returned to sender, it is a first step towards proving the inventor cannot be reached. The following is a list of evidentiary sources that are commonly relied upon to prove inability to locate an inventor: searches of Internet databases; inquiries of local telephone directories; and telegrams. Every listed type of search need not be done. However, a diligent effort to find the inventor must be made.

Documentary evidence that supports a finding that the non-signing inventor can not be found or reached should be made part of any affidavits or declarations that fully describe the exact facts which are relied on to establish that a diligent effort was made to locate the non-signing inventor. Printed computer records would suffice.

The affidavit or declaration of facts must be signed, where at all possible, by a person having *firsthand knowledge* of the facts recited therein. Statements based on hearsay will not normally be accepted. It is important that the affidavit or declaration contain statements of fact as opposed to conclusions.

As to item (2), the declaration does not identify the application by the application umber and filing date, as is required in the June 22, 2004 Notice.

Further correspondence with respect to this matter should be addressed as follows:

By mail: Mail Stop PETITION
Commissioner for Patents
Post Office Box 1450
Alexandria, VA 22313-1450

By hand: U.S. Patent and Trademark Office
Customer Service Window, Mail Stop Petition
Randolph Building
401 Dulany Street
Alexandria, VA 22314

By FAX: (703) 872-9306 – ATTN: Office of Petitions

Telephone inquiries should be directed to the undersigned at (571) 272-3230.

E. Shirene Willis

E. Shirene Willis
Senior Petitions Attorney
Office of Petitions

UNITED STATES PATENT AND TRADEMARK OFFICE

Commissioner for Patents
United States Patent and Trademark Office
P.O. Box 1450
Alexandria, VA 22313-1450
www.uspto.gov

MCKEE, VOORHEES & SEASE, P.L.C.
ATTN: MAYTAG
801 GRAND AVENUE, SUITE 3200
DES MOINES IA 50309-2721

COPY MAILED

AUG 2 5 2005

OFFICE OF PETITIONS

In re Application of
Jenkins & Seman
Application No.: 10/819,869
Filed: April 7, 2004
Attorney Docket No.: P05514US02
For: AIR TUNNEL DIVERTER AND METHOD OF INSTALING SAME

DECISION REFUSING STATUS UNDER 37 CFR 1.47(a)

This is a decision on the reconsideration petition under 37 CFR 1.47(a), filed August 15, 2005.

The reconsideration petition under 37 CFR 1.47(a) is **DISMISSED**.

Any request for reconsideration of this decision must be submitted within TWO (2) MONTHS from the mail date of this decision. Extensions of time under 37 CFR 1.136(a) are permitted. Any response should be entitled "Request for Reconsideration of Petition Under 37 CFR 1.47(a)" and may include an oath or declaration executed by the inventor. **Failure to respond will result in abandonment of the application.**

A grantable petition under 37 CFR 1.47(a) requires:

(1) a petition including proof of the pertinent facts establishing that the joint inventor(s) refuses to join, or cannot be found or reached after diligent effort,
(2) a proper oath or Declaration executed by the available joint inventor(s),
(3) the fee of $130 as specified in 37 CFR § 1.17(g), and
(4) the last known address of the omitted inventor(s).

This petition lacks item (1) above.

As to item (1), petitioner has failed to establish that the non-signing inventor, Richard F. Seman, Sr., has refused to sign the declaration.

The affidavit of Attorney R. Scott Johnson establishes that Mr. Seman was twice successfully mailed a copy of the application as filed and declaration, power of attorney, and assignment documents. The content of each cover letters is unknown, due to petitioner's redactions. Attorney Johnson states that Mr. Bill Rowley, CEO of Mr. Seman's employer, Mercury Plastics, Inc., told him that Mr. Seman "was refusing to sign the oath/declarations he had received."

As stated in MPEP 409.03(d), " Where a refusal of the inventor to sign the application papers is alleged, the circumstances of the presentation of the application papers and of the refusal must be specified in a statement of facts by the person who presented the inventor with the application papers and/or to whom the refusal was made. **Statements by a party not present when an oral refusal is made will not be accepted.**"

Only Mr. Rowley can provide a statement regarding Mr. Seman's express oral refusal to sign the oath/declarations he had received.

Regarding the declaration, OIPE prefers that the declaration identify the application by application number and filing date. However, MPEP602, Section VI Identification of Application states that an attorney docket number which was on the specification as filed will be accepted as complying with the identification requirement of 37 CFR 1.63. Therefore, the declaration is acceptable.

Further correspondence with respect to this matter should be addressed as follows:

By mail: Mail Stop PETITION
Commissioner for Patents
Post Office Box 1450
Alexandria, VA 22313-1450

By hand: U.S. Patent and Trademark Office
Customer Service Window, Mail Stop Petition
Randolph Building
401 Dulany Street
Alexandria, VA 22314

By FAX: (571) 273-8300 -- ATTN: Office of Petitions

Telephone inquiries should be directed to the undersigned at (571) 272-3230.

E. Shirene Willis

E. Shirene Willis
Senior Petitions Attorney
Office of Petitions

UNITED STATES PATENT AND TRADEMARK OFFICE

Commissioner for Patents
United States Patent and Trademark Office
P.O. Box 1450
Alexandria, VA 22313-1450
www.uspto.gov

MCKEE, VOORHEES & SEASE, P.L.C.
ATTN: MAYTAG
801 GRAND AVENUE, SUITE 3200
DES MOINES IA 50309-2721

COPY MAILED

MAR 1 4 2006

OFFICE OF PETITIONS

In re Application of
Jenkins, et al.
Application No. 10/819,869
Filed: April 7, 2004
Attorney Docket No. P05514US02
For: AIR TUNNEL DIVERTER AND METHOD OF INSTALING SAME

: DECISION NOTING JOINDER OF
: NON-SIGNING INVENTOR AND
: PETITION UNDER 37 CFR 1.47(A)
: DISMISSED AS MOOT

Papers filed on January 25, 2006 in reply to "Decision Refusing Status Under 37 CFR 1.47(a)" mailed on August 25, 2005, included a Declaration signed by the previously non-signing inventor, Richard R. Seman, in compliance with 37 CFR 1.63.

In view of the joinder of the inventor, further consideration under 37 CFR 1.47(a) is moot; this application does not have any rule 1.47(a) status and no such status should appear on the file wrapper. This application need not be returned to this office for any further consideration under 37 CFR 1.47(a).

Regarding fees, petitioner has submitted two petition fees. Only one is required. Deposit account no. 26-0084 will be credited one $200.00 petition fee.

After the mailing of this decision, the application will be forwarded to Technology Center 3744 for examination in due course.

Telephone inquiries should be directed to the undersigned at (571) 272-3230.

E. Shirene Willis

E. Shirene Willis
Senior Petitions Attorney
Office of Petitions

UNITED STATES PATENT AND TRADEMARK OFFICE

1746

Commissioner for Patents
United States Patent and Trademark Office
P.O. Box 1450
Alexandria, VA 22313-1450
www.uspto.gov

WILLIAM M. HANLON, JR
YOUNG & BASILE, PC
3001 WEST BIG BEAVER ROAD
SUITE 624
TROY, MI 48084-3107

COPY MAILED

OCT 0 7 2004

OFFICE OF PETITIONS

In re Application of
Belanger and Wentworth
Application No.: 10/819,887
Filed: April 7, 2004
Attorney Docket No: BGR-139-A
For: ROLLOVER PRESSURE CAR WASH APPARATUS AND METHODS OF OPERATING THE SAME

: DECISION ACCORDING
: RULE 47(a) STATUS

This is in response to the petition under 37 CFR 1.47(a), filed April 7, 2004.

The petition is **GRANTED**.

The above-identified application and papers have been reviewed and found in compliance with 37 CFR 1.47(a). This application is hereby accorded Rule 1.47(a) status.

The above-cited reissue application was filed on April 7, 2004, with a declaration executed by only inventor Belanger. In the instant petition, petitioner maintains that inventor Wentworth has refused join to execute the declaration and join the prosecution of the above-cited reissue application.

Petitioner has shown that inventor Wentworth has constructively refused to join the prosecution of the above-identified reissue application after having been presented with the application papers. The above-identified reissue application and papers have been reviewed and found in compliance with 37 CFR 1.47(a). This application is hereby accorded Rule 1.47(a) status.

As provided in Rule 1.47(c), this Office will forward notice of this application's filing to the non-signing inventor at the addresses given in the petition. Notice of the filing of this application will also be published in the Official Gazette.

This application will be directed to the Office of Initial Patent Examination for further processing.

Telephone inquiries should be directed to the undersigned at (571) 272-3222.

Kenya A. McLaughlin

Kenya A. McLaughlin
Petitions Attorney
Office of Petitions

OIPE IAP18
JAN 16 2007
PATENT & TRADEMARK OFFICE

IFW

PATENT

IN THE UNITED STATES PATENT AND TRADEMARK OFFICE

In re Application of:
Gabriel Alonso et al.

Serial No.: 10/819,893

Filed: April 7, 2004

For: MOLYBDENUM SULFIDE/CARBIDE CATALYSTS

Group Art Unit: 1725

Examiner: Christina Ann Johnson

Atty. Dkt. No.: UTSE:092US

CERTIFICATE OF MAILING
37 C.F.R. § 1.8

I hereby certify that this correspondence is being deposited with the U.S. Postal Service as First Class Mail in an envelope addressed to: Mail Stop Amendment, Commissioner for Patents, P.O. Box 1450, Alexandria, VA 22313-1450, on the date below.

January 9, 2007 — Gilbert A. Greene
Date

REQUEST TO CORRECT INVENTORSHIP UNDER 37 C.F.R. §1.48(A)

Commissioner for Patents
P.O. Box 1450
Alexandria, Virginia 22313-01450

Sir:

This is a request to correct inventorship in a non-provisional application after filing of an oath/declaration under 37 C.F.R. §1.48(a). Pursuant to 37 C.F.R. § 1.48(a)(1), the requested change includes the addition of Brenda Torres as an inventor. The following items are being submitted pursuant to 37 C.F.R. § 1.48(a)(2)-(5):

(1) a statement by Brenda Torres pursuant to 37 C.F.R. §1.48(a)(2);

(2) a Declaration by all of the actual inventors submitted pursuant to 37 C.F.R. § 1.48(a)(3);

01/17/2007 JBALINAN 00000005 10819893
01 FC:1464 130.00 OP

(3) a check in the amount of $130.00 pursuant to 37 C.F.R. § 1.48(a)(4), which is the processing fee under 37 C.F.R. § 1.17(i); and

(4) written consent of the assignees to correct the inventorship submitted pursuant to 37 C.F.R. § 1.48(a)(5).

Correction of the inventorship in the case is respectfully requested. If the check is inadvertently omitted, or should any additional fees under 37 C.F.R. §§ 1.16 to 1.21 be required for any reason relating to the enclosed materials, or should an overpayment be included herein, the Commissioner is authorized to deduct or credit said fees from or to Fulbright & Jaworski Deposit Account No.: 50-1212/UTSE:092US.

Respectfully submitted,

Gilbert A. Greene

Gilbert A. Greene
Reg. No. 48,366
Attorney for Applicants

FULBRIGHT & JAWORSKI L.L.P.
600 Congress Avenue, Suite 2400
Austin, Texas 78701
(512) 474-5201

Date: January 9, 2007

OIPE IAP18
JAN 16 2007
PATENT & TRADEMARK OFFICE

PATENT

IN THE UNITED STATES PATENT AND TRADEMARK OFFICE

In re Application of:
Gabriel Alonso et al.

Serial No.: 10/819,893

Filed: April 7, 2004

For: MOLYBDENUM SULFIDE/CARBIDE CATALYSTS

Group Art Unit: 1725

Examiner: Christina Ann Johnson

Atty. Dkt. No.: UTSE:092US

CERTIFICATE OF MAILING
37 C.F.R. § 1.8

I hereby certify that this correspondence is being deposited with the U.S. Postal Service as First Class Mail in an envelope addressed to: Commissioner for Patents, P.O. Box 1450, Alexandria, VA 22313-1450, on the date below:

1-9-07 Gilbert A. Greene
Date Gilbert A. Greene

STATEMENT OF BRENDA TORRES PURSUANT TO 37 C.F.R. § 1.48(A)(2)

I, Brenda Torres, state the following:

(1) I was not originally named as an inventor in U.S. Patent Application No. 10/819,893, entitled "MOLYBDENUM SULFIDE/CARBIDE CATALYSTS."

(2) The failure to name me as an inventor occurred without any deceptive intent on my part.

Brenda Torres

Nov 03/2006
Date

OIPE IAP18
JAN 16 2007
PATENT & TRADEMARK OFFICE

PATENT
UTSE:092US

DECLARATION

As a below named inventor, I hereby declare that:

My residence, post office address and citizenship are as stated below next to my name.

I believe I am the original, first and sole inventor (if only one name is listed below) or the below named inventors are the original, first and joint inventors (if plural names are listed below) of the subject matter which is claimed and for which a patent is sought on the invention entitled **MOLYBDENUM SULFIDE/CARBIDE CATALYSTS**, the Specification of which:

☐ is attached hereto.
☒ was filed on **April 7, 2004** as Application Serial No. **10/819,893**.

I hereby state that I have reviewed and understand the contents of the above-identified specification, including the claims.

I acknowledge the duty to disclose to the Patent and Trademark Office all information known to me to be material to patentability of the subject matter claimed in this application, as "materiality" is defined in Title 37, Code of Federal Regulations, § 1.56.

I hereby claim priority benefits under Title 35, United States Code, § 119 or 365(b) of any foreign application(s) for patent, United States provisional application(s), or inventor's or plant breeder's rights certificate(s), or 365(a) of any PCT international application which designated at least one country other than the United States of America, listed below and have also identified below any foreign application for patent, United States provisional application, or inventor's or plant breeder's rights certificate(s), or any PCT international application having a filing date before that of the application on which priority is claimed:

PRIORITY APPLICATION(S)

			Priority Claimed
60/460,862	USA	April 7, 2003	YES
(Number)	(Country)	(Date Filed)	Yes/No
(Number)	(Country)	(Date Filed)	Yes/No

I hereby claim the benefit under Title 35, United States Code, § 120 of any United States application(s) listed below or any PCT international application(s) designating the United States listed below and, insofar as the subject matter of each of the claims of this application is not disclosed in the prior United States application or PCT international application in the manner provided by the first paragraph of Title 35, United States Code, § 112, I acknowledge the duty to disclose all information known to me to be material to patentability of the subject matter claimed

in this application, as "materiality" is defined in Title 37, Code of Federal Regulations, § 1.56, which become available between the filing date of the prior application and the national or PCT international filing date of this application: NONE.

(Application Serial No.)	(Filing Date)	(Status)
(Application Serial No.)	(Filing Date)	(Status)

I hereby direct that all correspondence and telephone calls be addressed to Gina N. Shishima, Fulbright & Jaworski L.L.P., 600 Congress Avenue, Suite 2400, Austin, Texas 78701, (512) 474-5201.

I HEREBY DECLARE THAT ALL STATEMENTS MADE OF MY OWN KNOWLEDGE ARE TRUE AND THAT ALL STATEMENTS MADE ON INFORMATION AND BELIEF ARE BELIEVED TO BE TRUE; AND FURTHER THAT THESE STATEMENTS WERE MADE WITH THE KNOWLEDGE THAT WILLFUL FALSE STATEMENTS AND THE LIKE SO MADE ARE PUNISHABLE BY FINE OR IMPRISONMENT, OR BOTH, UNDER SECTION 1001 OF TITLE 18 OF THE UNITED STATES CODE AND THAT SUCH WILLFUL FALSE STATEMENTS MAY JEOPARDIZE THE VALIDITY OF THE APPLICATION OR ANY PATENT ISSUED THEREON.

Inventor's Full Name:	Gabriel		Alonso
Inventor's Signature:			
Country of Citizenship:	Mexico	Date: Nov. 9-2006	
Residence Address: (street, number, city, state, and/or country)	Miguel de Cervantes 215-49 Rinconada de Cervantes, C.P. 31109 Chihuahua, Chih. Mexico		
Post Office Address: (if different from above)			

Inventor's Full Name:	Russell	R.	Chianelli
Inventor's Signature:			
Country of Citizenship:	USA	Date:	
Residence Address: (street, number, city, state, and/or country)	752 Cheltenham Drive El Paso, TX 79912		
Post Office Address: (if different from above)			

Inventor's Full Name:	Sergio		Fuentes
Inventor's Signature:			
Country of Citizenship:	Mexico	Date:	
Residence Address: (street, number, city, state, and/or country)	Quintas Santa Lucia, casa G Kilometro 107 Carretera Tijuana-Ensenada Ensenada, B.C., C.P. 22860 Mexico		
Post Office Address: (if different from above)			

Inventor's Full Name:	Brenda		Torres
Inventor's Signature:			
Country of Citizenship:	Mexico	Date:	
Residence Address: (street, number, city, state, and/or country)	4111 Westcity Ct., Apt. 4 El Paso, TX 79902		
Post Office Address: (if different from above)			

OIPE IAP18
JAN 16 2007
PATENT & TRADEMARK OFFICE

PATENT
UTSE:092US

DECLARATION

As a below named inventor, I hereby declare that:

My residence, post office address and citizenship are as stated below next to my name.

I believe I am the original, first and sole inventor (if only one name is listed below) or the below named inventors are the original, first and joint inventors (if plural names are listed below) of the subject matter which is claimed and for which a patent is sought on the invention entitled **MOLYBDENUM SULFIDE/CARBIDE CATALYSTS**, the Specification of which:

☐ is attached hereto.
☒ was filed on **April 7, 2004** as Application Serial No. **10/819,893**.

I hereby state that I have reviewed and understand the contents of the above-identified specification, including the claims.

I acknowledge the duty to disclose to the Patent and Trademark Office all information known to me to be material to patentability of the subject matter claimed in this application, as "materiality" is defined in Title 37, Code of Federal Regulations, § 1.56.

I hereby claim priority benefits under Title 35, United States Code, § 119 or 365(b) of any foreign application(s) for patent, United States provisional application(s), or inventor's or plant breeder's rights certificate(s), or 365(a) of any PCT international application which designated at least one country other than the United States of America, listed below and have also identified below any foreign application for patent, United States provisional application, or inventor's or plant breeder's rights certificate(s), or any PCT international application having a filing date before that of the application on which priority is claimed:

PRIORITY APPLICATION(S)			**Priority Claimed**
60/460,862	USA	April 7, 2003	YES
(Number)	(Country)	(Date Filed)	Yes/No
(Number)	(Country)	(Date Filed)	Yes/No

I hereby claim the benefit under Title 35, United States Code, § 120 of any United States application(s) listed below or any PCT international application(s) designating the United States listed below and, insofar as the subject matter of each of the claims of this application is not disclosed in the prior United States application or PCT international application in the manner provided by the first paragraph of Title 35, United States Code, § 112, I acknowledge the duty to disclose all information known to me to be material to patentability of the subject matter claimed

in this application, as "materiality" is defined in Title 37, Code of Federal Regulations, § 1.56, which become available between the filing date of the prior application and the national or PCT international filing date of this application: NONE.

(Application Serial No.)	(Filing Date)	(Status)
(Application Serial No.)	(Filing Date)	(Status)

I hereby direct that all correspondence and telephone calls be addressed to Gina N. Shishima, Fulbright & Jaworski L.L.P., 600 Congress Avenue, Suite 2400, Austin, Texas 78701, (512) 474-5201.

I HEREBY DECLARE THAT ALL STATEMENTS MADE OF MY OWN KNOWLEDGE ARE TRUE AND THAT ALL STATEMENTS MADE ON INFORMATION AND BELIEF ARE BELIEVED TO BE TRUE; AND FURTHER THAT THESE STATEMENTS WERE MADE WITH THE KNOWLEDGE THAT WILLFUL FALSE STATEMENTS AND THE LIKE SO MADE ARE PUNISHABLE BY FINE OR IMPRISONMENT, OR BOTH, UNDER SECTION 1001 OF TITLE 18 OF THE UNITED STATES CODE AND THAT SUCH WILLFUL FALSE STATEMENTS MAY JEOPARDIZE THE VALIDITY OF THE APPLICATION OR ANY PATENT ISSUED THEREON.

Inventor's Full Name:	Gabriel		Alonso
Inventor's Signature:			
Country of Citizenship:	Mexico	Date:	
Residence Address: (street, number, city, state, and/or country)	Miguel de Cervantes 215-49 Rinconada de Cervantes, C.P. 31109 Chihuahua, Chih. Mexico		
Post Office Address: (if different from above)			

Inventor's Full Name:	Russell	R.	Chianelli
Inventor's Signature:	RRChianelli		
Country of Citizenship:	USA	Date: 11/07/2006	
Residence Address: (street, number, city, state, and/or country)	752 Cheltenham Drive El Paso, TX 79912		
Post Office Address: (if different from above)			

Inventor's Full Name:	Sergio		Fuentes
Inventor's Signature:			
Country of Citizenship:	Mexico	Date:	
Residence Address: (street, number, city, state, and/or country)	Quintas Santa Lucia, casa G Kilometro 107 Carretera Tijuana-Ensenada Ensenada, B.C., C.P. 22860 Mexico		
Post Office Address: (if different from above)			

Inventor's Full Name:	Brenda		Torres
Inventor's Signature:			
Country of Citizenship:	Mexico	Date: Nov 03, 2006	
Residence Address: (street, number, city, state, and/or country)	4111 Westcity Ct., Apt. 4 El Paso, TX 79902		
Post Office Address: (if different from above)			

OIPE IAP18
JAN 16 2007
PATENT & TRADEMARK OFFICE

PATENT
UTSE:092US

DECLARATION

As a below named inventor, I hereby declare that:

My residence, post office address and citizenship are as stated below next to my name.

I believe I am the original, first and sole inventor (if only one name is listed below) or the below named inventors are the original, first and joint inventors (if plural names are listed below) of the subject matter which is claimed and for which a patent is sought on the invention entitled **MOLYBDENUM SULFIDE/CARBIDE CATALYSTS**, the Specification of which:

☐ is attached hereto.
☒ was filed on **April 7, 2004** as Application Serial No. **10/819,893**.

I hereby state that I have reviewed and understand the contents of the above-identified specification, including the claims.

I acknowledge the duty to disclose to the Patent and Trademark Office all information known to me to be material to patentability of the subject matter claimed in this application, as "materiality" is defined in Title 37, Code of Federal Regulations, § 1.56.

I hereby claim priority benefits under Title 35, United States Code, § 119 or 365(b) of any foreign application(s) for patent, United States provisional application(s), or inventor's or plant breeder's rights certificate(s), or 365(a) of any PCT international application which designated at least one country other than the United States of America, listed below and have also identified below any foreign application for patent, United States provisional application, or inventor's or plant breeder's rights certificate(s), or any PCT international application having a filing date before that of the application on which priority is claimed:

PRIORITY APPLICATION(S)			**Priority Claimed**
60/460,862	USA	April 7, 2003	YES
(Number)	(Country)	(Date Filed)	Yes/No
(Number)	(Country)	(Date Filed)	Yes/No

I hereby claim the benefit under Title 35, United States Code, § 120 of any United States application(s) listed below or any PCT international application(s) designating the United States listed below and, insofar as the subject matter of each of the claims of this application is not disclosed in the prior United States application or PCT international application in the manner provided by the first paragraph of Title 35, United States Code, § 112, I acknowledge the duty to disclose all information known to me to be material to patentability of the subject matter claimed

in this application, as "materiality" is defined in Title 37, Code of Federal Regulations, § 1.56, which become available between the filing date of the prior application and the national or PCT international filing date of this application: NONE.

(Application Serial No.)	(Filing Date)	(Status)
(Application Serial No.)	(Filing Date)	(Status)

I hereby direct that all correspondence and telephone calls be addressed to Gina N. Shishima, Fulbright & Jaworski L.L.P., 600 Congress Avenue, Suite 2400, Austin, Texas 78701, (512) 474-5201.

I HEREBY DECLARE THAT ALL STATEMENTS MADE OF MY OWN KNOWLEDGE ARE TRUE AND THAT ALL STATEMENTS MADE ON INFORMATION AND BELIEF ARE BELIEVED TO BE TRUE; AND FURTHER THAT THESE STATEMENTS WERE MADE WITH THE KNOWLEDGE THAT WILLFUL FALSE STATEMENTS AND THE LIKE SO MADE ARE PUNISHABLE BY FINE OR IMPRISONMENT, OR BOTH, UNDER SECTION 1001 OF TITLE 18 OF THE UNITED STATES CODE AND THAT SUCH WILLFUL FALSE STATEMENTS MAY JEOPARDIZE THE VALIDITY OF THE APPLICATION OR ANY PATENT ISSUED THEREON.

Inventor's Full Name:	Gabriel		Alonso
Inventor's Signature:			
Country of Citizenship:	Mexico	Date:	
Residence Address: (street, number, city, state, and/or country)	Miguel de Cervantes 215-49 Rinconada de Cervantes, C.P. 31109 Chihuahua, Chih. Mexico		
Post Office Address: (if different from above)			

Inventor's Full Name:	Russell	R.	Chianelli
Inventor's Signature:			
Country of Citizenship:	USA	Date:	
Residence Address: (street, number, city, state, and/or country)	752 Cheltenham Drive El Paso, TX 79912		
Post Office Address: (if different from above)			

Inventor's Full Name:	Sergio		Fuentes
Inventor's Signature:			
Country of Citizenship:	Mexico	Date: November 9, 06	
Residence Address: (street, number, city, state, and/or country)	Quintas Santa Lucia, casa G Kilometro 107 Carretera Tijuana-Ensenada Ensenada, B.C., C.P. 22860 Mexico		
Post Office Address: (if different from above)			

Inventor's Full Name:	Brenda		Torres
Inventor's Signature:			
Country of Citizenship:	Mexico	Date:	
Residence Address: (street, number, city, state, and/or country)	4111 Westcity Ct., Apt. 4 El Paso, TX 79902		
Post Office Address: (if different from above)			

OIPE IAP18
JAN 16 2007
PATENT & TRADEMARK OFFICE

PATENT

IN THE UNITED STATES PATENT AND TRADEMARK OFFICE

In re Application of:
Gabriel Alonso et al.

Serial No.: 10/819,893

Filed: April 7, 2004

For: MOLYBDENUM SULFIDE/CARBIDE CATALYSTS

Group Art Unit: 1725

Examiner: Christina Ann Johnson

Atty. Dkt. No.: UTSE:092US

CERTIFICATE OF MAILING
37 C.F.R. § 1.8

I hereby certify that this correspondence is being deposited with the U.S. Postal Service as First Class Mail in an envelope addressed to: Commissioner for Patents, P.O. Box 1450, Alexandria, VA 22313-1450, on the date below:

1-9-07 Gilbert A. Greene
Date Gilbert A. Greene

CONSENT OF ASSIGNEE TO THE ADDITION OF A CO-INVENTOR UNDER 37 C.F.R. §3.73

The assignee of the above-referenced application, Board of Regents, The University of Texas System, hereby consents to the addition of Brenda Torres as a co-inventor of said application. The Board of Regents, The University of Texas System submits an Assignment as evidence of its ownership of the application.

BOARD OF REGENTS, THE UNIVERSITY OF TEXAS SYSTEM

By: _____

Name: Barry D. Burgdorf

Title: Vice Chancellor & General Counsel

Date: 10/13/04

UNITED STATES PATENT AND TRADEMARK OFFICE

Commissioner for Patents
United States Patent and Trademark Office
P.O. Box 1450
Alexandria, VA 22313-1450
www.uspto.gov

FISH & NEAVE IP GROUP
ROPES & GRAY LLP
ONE INTERNATIONAL PLACE
BOSTON MA 02110-2624

COPY MAILED

OCT 3 1 2006

OFFICE OF PETITIONS

In re Application of	:	
Yan Chang, et al.	:	
Application No. 10/819,901	:	DECISION ON PETITION
Filed: April 7, 2004	:	TO WITHDRAW
Attorney Docket No. GLYO-P01-006	:	FROM RECORD
	:	

This is a decision on the Request to Withdraw as attorney or agent of record under 37 C.F.R. § 1.36(b) filed July 24, 2006.

The request is **APPROVED**.

A grantable request to withdraw as attorney/agent of record must be signed by every attorney/agent seeking to withdraw or contain a clear indication that one attorney is signing on behalf of another/others. A request to withdraw will not be approved unless at least 30 (thirty) days would remain between the date of approval and the later of the expiration date of a time to file a response or the expiration date of the maximum time period which can be extended under 37 C.F.R. § 1.136(a).

The request was signed by David P. Halstead on behalf of all attorneys of record who are associated with this application.

All attorneys/agents associated with this application have been withdrawn.

Applicant is reminded that there is no attorney of record at this time.

The request to change the correspondence of record is not acceptable as the requested correspondence address is not that of: (1) the first named signing inventor; or (2) an intervening assignee of the entire interest under 37 C.F.R 3.71. All future communications from the Office will be directed to the first named signing inventor at the first copied address below until otherwise properly notified by the applicant.

Telephone inquiries concerning this decision should be directed to April Wise at 571-272-1642.

April M. Wise
Petitions Examiner
Office of Petitions

cc: YAN CHANG
79 WINTER STREET
ASHLAND, MA 01721

cc: MARK G. DEGIACOMO
MURTHA CULLINA, LLP
99 HIGH STREET
20th FLOOR
BOSTON, MA 02110

UNITED STATES PATENT AND TRADEMARK OFFICE

UNITED STATES DEPARTMENT OF COMMERCE
United States Patent and Trademark Office
Address: COMMISSIONER FOR PATENTS
P.O. Box 1450
Alexandria, Virginia 22313-1450
www.uspto.gov

APPLICATION NUMBER	FILING OR 371 (c) DATE	FIRST NAMED APPLICANT	ATTY. DOCKET NO./TITLE
10/819,901	04/07/2004	Yan Chang	GLYO-P01-006

CONFIRMATION NO. 6299

OC000000021038872

OC000000021038872

28120
FISH & NEAVE IP GROUP
ROPES & GRAY LLP
ONE INTERNATIONAL PLACE
BOSTON, MA 02110-2624

Date Mailed: 10/31/2006

NOTICE REGARDING CHANGE OF POWER OF ATTORNEY

This is in response to the Power of Attorney filed 07/24/2006.

- The withdrawal as attorney in this application has been accepted. Future correspondence will be mailed to the new address of record. 37 CFR 1.33.

April M Wise

APRIL M WISE
OP (571) 272-1642

FORMER ATTORNEY/AGENT COPY

UNITED STATES PATENT AND TRADEMARK OFFICE

COMMISSIONER FOR PATENTS
UNITED STATES PATENT AND TRADEMARK OFFICE
P.O. BOX 1450
ALEXANDRIA, VA 22313-1450
www.uspto.gov

MICHAEL R. WILLIAMS
ADE & COMPANY
1700-360 MAIN STREET
WINNIPEG MANITOBA R3C 3Z3 CA
CANADA

COPY MAILED

APR 05 2007

OFFICE OF PETITIONS

In re Application of :
Thomas E. Waddell, et al. :
Application No. 10/819,925 : ON PETITION
Filed: April 8, 2004 :
Attorney Docket No. 85043-502 :

This is a decision in response to the petition, filed October 24, 2006, to revive the above-identified application under the provisions of 37 CFR 1.137(b).

The petition is **GRANTED**.

The above-identified application became abandoned for failure to reply in a timely manner to the non-final Office action mailed December 20, 2005, which set a shortened statutory period for reply of one (1) month or thirty (30) days (whichever is later). No extension of time under the provisions of 37 CFR 1.136(a) was obtained. On October 3, 2006, a Notice of Abandonment was mailed. In response, on October 24, 2006 the present petition was filed.

The petition satisfies the requirements of 37 CFR 1.137(b) in that petitioner has supplied (1) the response in the form of an election of the invention to be examined; (2) the petition fee of $1,500; and (3) the requisite statement of unintentional delay.

The application is being referred to Technology Center AU 1645 for consideration of the response filed October 24, 2006.

Telephone inquiries concerning this decision may be directed to the undersigned at (571) 272-3204. All other inquiries regarding this application should be directed to the Technology Center.

Sherry D. Brinkley
Petitions Examiner
Office of Petitions

SPE RESPONSE FOR CERTIFICATE OF CORRECTION

Paper No.: —

DATE : 6/14/05

TO SPE OF : ART UNIT 2833

SUBJECT : Request for Certificate of Correction on Patent No.: 6824418 B2

A response is requested with respect to the accompanying request for a certificate of correction.

Please complete this form and return with file, within **7** days to:
Palm location **7580, Certificates of Correction Branch – South Tower – 9A22**
If response is for an IFW, **return to employee (named below) via PUBSCofC Team in MADRAS.**
With respect to the change(s) requested, correcting Office and/or Applicant's errors, should the patent read as shown in the certificate of correction (COCIN)? No new matter should be introduced, nor should the scope or meaning of the claims be changed.

Virginia Tolbert

Thank You For Your Assistance

Certificates of Correction Branch
Tel. No. 703-308-9390 ext. 113

The request for issuing the above-identified correction(s) is hereby:
Note your decision on the appropriate box.

- ☑ **Approved** DKP — **All** changes apply.
- ☐ **Approved in Part** — Specify below which changes **do not** apply.
- ☐ **Denied** — State the reasons for denial below.

Comments:

P. AUSTIN BRADLEY
SUPERVISORY PATENT EXAMINER
TECHNOLOGY CENTER 2800

P. Bradley
SPE

2833
Art Unit

UNITED STATES PATENT AND TRADEMARK OFFICE

Commissioner for Patents
United States Patent and Trademark Office
P.O. Box 1450
Alexandria, VA 22313-1450
www.uspto.gov

STEVENS DAVIS MILLER & MOSHER
1615 L STREET, NW
SUITE 850
WASHINGTON DC 20036

COPY MAILED

JAN 19 2006

OFFICE OF PETITIONS

ON PETITION

In re Application of	:	
Kenichi Hidaka et al	:	
Application No. 10/819,976	:	
Filed: April 8, 2004	:	
Attorney Docket No. L8462.04114	:	

This is a decision on the petition, filed January 17, 2006, which is being treated under 37 CFR 1.313(c)(2) to withdraw the above-identified application from issue after payment of the issue fee.

The petition is **GRANTED.**

The above-identified application is withdrawn from issue for consideration of a submission under 37 CFR 1.114 (request for continued examination). See 37 CFR 1.313(c)(2).

Petitioner is advised that the issue fee paid on November 16, 2005, in the above-identified application cannot be refunded. If, however, the above-identified application is again allowed, petitioner may request that it be applied towards the issue fee required by the new Notice of Allowance.[1]

Telephone inquiries should be directed to the undersigned at (571) 272-3208.

The examiner of Technology Center AU 2816 will consider the request for continued examination under 37 CFR 1.114.

Karen Creasy

Karen Creasy
Petitions Examiner
Office of Petitions
Office of the Deputy Commissioner
for Patent Examination Policy

---

[1] The request to apply the issue fee to the new Notice may be satisfied by completing and returning the new Issue Fee Transmittal Form PTOL-85(b), which includes the following language thereon: "Commissioner for Patents is requested to apply the Issue Fee and Publication Fee (if any) or re-apply any previously paid issue fee to the application identified above." Petitioner is advised that, whether a fee is indicated as being due or not, the Issue Fee Transmittal Form **must** be completed and timely submitted to avoid abandonment. Note the language in bold text on the first page of the Notice of Allowance and Fee(s) Due (PTOL-85).

UNITED STATES PATENT AND TRADEMARK OFFICE

UNITED STATES DEPARTMENT OF COMMERCE
United States Patent and Trademark Office
Address: COMMISSIONER FOR PATENTS
P.O. Box 1450
Alexandria, Virginia 22313-1450
www.uspto.gov

APPL NO.	FILING OR 371 (c) DATE	ART UNIT	FIL FEE REC'D	ATTY.DOCKET NO	DRAWINGS	TOT CLMS	IND CLMS
10/819,981	04/08/2004	2642	1446	59643.00370	3	48	5

CONFIRMATION NO. 6897

FILING RECEIPT

OC000000013035789

32294
SQUIRE, SANDERS & DEMPSEY L.L.P.
14TH FLOOR
8000 TOWERS CRESCENT
TYSONS CORNER, VA 22182

Date Mailed: 06/22/2004

Receipt is acknowledged of this regular Patent Application. It will be considered in its order and you will be notified as to the results of the examination. Be sure to provide the U.S. APPLICATION NUMBER, FILING DATE, NAME OF APPLICANT, and TITLE OF INVENTION when inquiring about this application. Fees transmitted by check or draft are subject to collection. Please verify the accuracy of the data presented on this receipt. **If an error is noted on this Filing Receipt, please write to the Office of Initial Patent Examination's Filing Receipt Corrections, facsimile number 703-746-9195. Please provide a copy of this Filing Receipt with the changes noted thereon. If you received a "Notice to File Missing Parts" for this application, please submit any corrections to this Filing Receipt with your reply to the Notice. When the USPTO processes the reply to the Notice, the USPTO will generate another Filing Receipt incorporating the requested corrections (if appropriate).**

Applicant(s)

Juha-Pekka Koskinen, Hameenlinna, FINLAND;
Juha R. Vallinen, Tampere, FINLAND;

Assignment For Published Patent Application

Nokia Corporation;

Domestic Priority data as claimed by applicant

Foreign Applications

UNITED KINGDOM 0327379.4 11/25/2003

If Required, Foreign Filing License Granted: 06/22/2004

Projected Publication Date: 05/26/2005

Non-Publication Request: No

Early Publication Request: No

Title

Telecommunications network having number portability

Preliminary Class
379

LICENSE FOR FOREIGN FILING UNDER
Title 35, United States Code, Section 184
Title 37, Code of Federal Regulations, 5.11 & 5.15

GRANTED

The applicant has been granted a license under 35 U.S.C. 184, if the phrase "IF REQUIRED, FOREIGN FILING LICENSE GRANTED" followed by a date appears on this form. Such licenses are issued in all applications where the conditions for issuance of a license have been met, regardless of whether or not a license may be required as set forth in 37 CFR 5.15. The scope and limitations of this license are set forth in 37 CFR 5.15(a) unless an earlier license has been issued under 37 CFR 5.15(b). The license is subject to revocation upon written notification. The date indicated is the effective date of the license, unless an earlier license of similar scope has been granted under 37 CFR 5.13 or 5.14.

This license is to be retained by the licensee and may be used at any time on or after the effective date thereof unless it is revoked. This license is automatically transferred to any related applications(s) filed under 37 CFR 1.53(d). This license is not retroactive.

The grant of a license does not in any way lessen the responsibility of a licensee for the security of the subject matter as imposed by any Government contract or the provisions of existing laws relating to espionage and the national security or the export of technical data. Licensees should apprise themselves of current regulations especially with respect to certain countries, of other agencies, particularly the Office of Defense Trade Controls, Department of State (with respect to Arms, Munitions and Implements of War (22 CFR 121-128)); the Office of Export Administration, Department of Commerce (15 CFR 370.10 (j)); the Office of Foreign Assets Control, Department of Treasury (31 CFR Parts 500+) and the Department of Energy.

NOT GRANTED

No license under 35 U.S.C. 184 has been granted at this time, if the phrase "IF REQUIRED, FOREIGN FILING LICENSE GRANTED" DOES NOT appear on this form. Applicant may still petition for a license under 37 CFR 5.12, if a license is desired before the expiration of 6 months from the filing date of the application. If 6 months has lapsed from the filing date of this application and the licensee has not received any indication of a secrecy order under 35 U.S.C. 181, the licensee may foreign file the application pursuant to 37 CFR 5.15(b).

UNITED STATES PATENT AND TRADEMARK OFFICE

Commissioner for Patents
United States Patent and Trademark Office
P.O. Box 1450
Alexandria, VA 22313-1450
www.uspto.gov

FOLEY & LARDNER LLP
150 EAST GILMAN STREET
P.O. BOX 1497
MADISON WI 53701-1497

MAILED

APR 26 2010

OFFICE OF PETITIONS

In re Application of	:	
Koskinen, et al.	:	
Application No. 10/819,981	:	ON APPLICATION FOR
Filed: April 8, 2004	:	PATENT TERM ADJUSTMENT
Atty Docket No. 088245-1081	:	

This is in response to the REQUEST FOR RECONSIDERATION OF PATENT TERM ADJUSTMENT UNDER 37 C.F.R. 1.705 filed November 2, 2009. Applicants submit the patent term adjustment to be indicated on the patent is one thousand seven hundred fourteen (1714) days[1], not eight hundred fifty-three (853) days as calculated by the Office as of the mailing of the initial determination of patent term adjustment. Applicants request this correction on the basis that the Office will take in excess of three years to issue this patent.

In addition, applicants dispute the period of reduction of 149 days for Applicant delay entered in connection with the filing of an Information Disclosure Statement (IDS) on August 19, 2005.

To the extent that applicants request reconsideration of the patent term adjustment as it relates to the Office's failure to issue the patent within 3 years of the filing date, the application for patent term adjustment under 37 CFR 1.705(b) is **DISMISSED as PREMATURE**.

Knowledge of the actual date the patent issues is required to calculate the amount, if any, of additional patent term patentees are entitled to for Office failure to issue the patent within 3 years. See § 1.702(b). The computer will not undertake the § 1.702(b) calculation until the actual date of issuance of the patent has been determined. Likewise, the computer will not calculate any further Office delay under § 1.702(a)(4) or applicant delay under § 1.704(c)(10) until the actual date of

[1] This calculation is based on a projected issuance date of February 16, 2010.

issuance of the patent has been determined. As such, the Office cannot make a determination on the correctness of the patent term adjustment until the patent has issued. Requesting reconsideration of the patent term adjustment to be indicated on the patent under 37 CFR 1.705(b) based on the initial determination of patent term adjustment and a projected issuance date of the patent is premature. Accordingly, it is appropriate to dismiss as premature such a request.

Rather than file an application for patent term adjustment under 37 CFR 1.705(b) contesting the 37 CFR 1.702(b) calculation at the time of the mailing of the notice of allowance, applicants are advised that they may wait until the time of the issuance of the patent and file a request for reconsideration of the patent term adjustment pursuant to 37 CFR 1.705(d). As the USPTO does not calculate the amount of time earned pursuant to 37 CFR 1.702(b) until the time of the issuance of the patent, the Office will consider any request for reconsideration of the patent term adjustment due to an error in the calculation of 37 CFR 1.702(b) to be timely if the request for reconsideration is filed within two months of the issuance of the patent. However, as to all other bases for contesting the initial determination of patent term adjustment received with the notice of allowance, applicants must timely file an application for patent term adjustment prior to the payment of the issue fee[2].

To the extent that applicants otherwise request correction of the initial determination of patent term adjustment (PTA), the application for patent term adjustment is **GRANTED.**

The Office has updated the PALM screen to reflect that the correct Patent Term Adjustment determination at the time of the mailing of the Notice of Allowance is one thousand two (1002) days. A copy of the updated PALM screen, showing the determination, is enclosed.

---

[2] For example, if applicants dispute both the calculation of patent term adjustment under 37 CFR 1.702(a)(1) for Office failure to mail a first Office action or notice of allowance not later than fourteen months after the date on which the application was filed and under 37 CFR 1.702(b) for Office failure to issue a patent within three years of the actual filing date of the application, then applicants must still timely file an application for patent term adjustment prior to the payment of the issue fee to contest the calculation of Office delay in issuing a first Office action or notice of allowance. See 37 CFR 1.705(b) and 35 U.S.C. 154(b)(3)(B). A dispute as to the calculation of the §1.702(a)(1) period raised on request for reconsideration of patent term adjustment under 37 CFR 1.705(d) will be dismissed as untimely filed.

On August 6, 2009, the Office mailed the Determination of Patent Term Adjustment under 35 U.S.C. 154(b) in the above-identified application. The Notice stated the patent term adjustment to date is 853 days. Applicants dispute the reduction of 149 days associated with the filing of the Information Disclosure Statement (IDS) on August 19, 2005. Applicants argue the IDS was filed more than one month before any action was issued by the Office and request the 149 days be added back into the patent term adjustment.

Applicants' argument with respect to the Information Disclosure Statement filed on August 19, 2005 has been considered and found persuasive. The Office concurs the August 19, 2005 IDS was filed before the mailing date of the first Office action on the merits and is therefore not a supplemental reply. The December 23, 2004 Notice Under 37 CFR 1.251 - Pending Application is a request for reconstruction of a response to a Pre-Exam Formalities Notice. Applicants timely responded on March 23, 2005. However, the December 23, 2004 Notice is not a notice issued as a result of examination conducted pursuant to 35 U.S.C. 131, and as such, is not a notification under 35 U.S.C. 132. The first action on the merits was not mailed until March 6, 2008. Therefore, the IDS filed on August 19, 2005 is not a supplemental paper within the meaning of 37 CFR 1.704(c)(8). The IDS was not filed under circumstances that constitute a failure to engage in reasonable efforts to conclude examination of the examination. Accordingly, no reduction pursuant to 1.704(c)(8) is warranted and the reduction of 149 days is being removed.

In view of the previous discussion, the determination of patent term adjustment at the time of the mailing of the Notice of Allowance is **one thousand two (1002)** days.

The Office acknowledges submission of the $200.00 fee set forth in 37 CFR 1.18(e) for the present petition under 37 CFR 1.705(b). No additional fees are required.

Any request for reconsideration of the patent term adjustment indicated on the patent must be timely filed within 2 months after issuance pursuant to 37 CFR 1.705(d) and must include payment of the required fee under 37 CFR 1.18(e).

The Office of Data Management has been advised of this decision. This application is being referred to the Office of Data Management for issuance of the patent.

Telephone inquiries specific to this decision should be directed to Senior Petitions Attorney Shirene Willis Brantley at (571) 272-3230.

Anthony Knight
Director
Office of Petitions

Enclosure: Copy of adjusted PALM calculation

Day : Saturday
Date: 4/24/2010

PALM INTRANET

Time: 11:01:31

PTA Calculations for Application: 10/819981			
Application Filing Date:	04/08/2004	PTO Delay (PTO):	1002
Issue Date of Patent:		Three Years:	0
Pre-Issue Petitions:	0	Applicant Delay (APPL):	149
Post-Issue Petitions:	0	Total PTA (days):	1002
PTO Delay Adjustment:	149		

File Contents History

Number	Date	Contents Description	PTO	APPL	START
71	04/24/2010	ADJUSTMENT OF PTA CALCULATION BY PTO	149		
64	08/06/2009	MAIL NOTICE OF ALLOWANCE			
63	08/06/2009	ISSUE REVISION COMPLETED			
62	08/06/2009	NOTICE OF ALLOWANCE DATA VERIFICATION COMPLETED			
61	08/06/2009	DOCUMENT VERIFICATION			
60	08/06/2009	NOTICE OF ALLOWABILITY			
55	06/02/2009	DATE FORWARDED TO EXAMINER			
54	05/08/2009	RESPONSE AFTER NON-FINAL ACTION			
53	02/09/2009	MAIL NON-FINAL REJECTION			
52	02/04/2009	NON-FINAL REJECTION			
51	12/03/2008	DATE FORWARDED TO EXAMINER			
50	12/04/2008	MAIL APPEALS CONF. REOPEN PROSEC.			
49	12/02/2008	PRE-APPEALS CONFERENCE DECISION - REOPEN PROSECUTION			
48	11/11/2008	MISCELLANEOUS INCOMING LETTER			
47	11/11/2008	REQUEST FOR PRE-APPEAL CONFERENCE FILED			
46	11/11/2008	NOTICE OF APPEAL FILED			
45	10/07/2008	MAIL EXAMINER INTERVIEW SUMMARY (PTOL - 413)			
44	10/01/2008	EXAMINER INTERVIEW SUMMARY RECORD (PTOL - 413)			
43	08/08/2008	REQUEST FOR FOREIGN PRIORITY (PRIORITY PAPERS MAY BE INCLUDED)			
42	08/11/2008	MAIL FINAL REJECTION (PTOL - 326)			
41	08/06/2008	FINAL REJECTION			
40	06/03/2008	DATE FORWARDED TO EXAMINER			

39	05/07/2008	RESPONSE AFTER NON-FINAL ACTION			
38	03/06/2008	MAIL NON-FINAL REJECTION	1002		-1
37	02/28/2008	NON-FINAL REJECTION			
31	08/19/2005	INFORMATION DISCLOSURE STATEMENT CONSIDERED			
28	12/27/2007	PRELIMINARY AMENDMENT			
27	01/24/2008	CASE DOCKETED TO EXAMINER IN GAU			
26	10/22/2007	CHANGE IN POWER OF ATTORNEY (MAY INCLUDE ASSOCIATE POA)			
25	10/18/2007	CORRESPONDENCE ADDRESS CHANGE			
24	10/17/2007	WITHDRAW FLAGGED FOR 5/25			
23	10/16/2007	FLAGGED FOR 5/25			
22	06/27/2007	CASE DOCKETED TO EXAMINER IN GAU			
21	03/22/2006	CASE DOCKETED TO EXAMINER IN GAU			
20	10/15/2005	CASE DOCKETED TO EXAMINER IN GAU			
19	08/19/2005	REFERENCE CAPTURE ON IDS			
18.7	08/19/2005	INFORMATION DISCLOSURE STATEMENT (IDS) FILED		149	13
18	08/19/2005	INFORMATION DISCLOSURE STATEMENT (IDS) FILED			
17	08/16/2005	IFW TSS PROCESSING BY TECH CENTER COMPLETE			
16	08/16/2005	CASE DOCKETED TO EXAMINER IN GAU			
15	04/08/2004	OATH OR DECLARATION FILED (INCLUDING SUPPLEMENTAL)			
14	09/30/2004	MISCELLANEOUS INCOMING LETTER			
13	03/23/2005	RESPONSE TO NOTICE OF LOST IMAGE			
12	12/23/2004	MAIL NOTICE OF LOST IMAGE DOCUMENT			
10	12/23/2004	NOTICE OF LOST IMAGE DOCUMENT			
9	06/22/2004	APPLICATION RETURN FROM OIPE			
8	06/22/2004	APPLICATION RETURN TO OIPE			
7	06/22/2004	APPLICATION DISPATCHED FROM OIPE			
6	06/22/2004	APPLICATION IS NOW COMPLETE			
5	05/10/2004	CLEARED BY L&R (LARS)			
4	05/06/2004	REFERRED TO LEVEL 2 (LARS) BY OIPE CSR			
3	05/06/2004	CASE CLASSIFIED BY OIPE			
2	04/19/2004	IFW SCAN & PACR AUTO SECURITY REVIEW			
1	04/08/2004	INITIAL EXAM TEAM NN			

Search Another: Application# [ ] Search

EXPLANATION OF PTA CALCULATION

EXPLANATION OF PTE CALCULATION

To go back, right click here and select Back. To go forward, right click here and select Forward. To refresh, right click here and select Refresh.

Back to OASIS | Home page