UNITED STATES PATENT AND TRADEMARK OFFICE

Commissioner for Patents
United States Patent and Trademark Office
P.O. Box 1450
Alexandria, VA 22313-1450
www.uspto.gov

Holland & Bonzagni, P.C.
171 Dwight Road, Suite 302
Longmeadow, MA 01106-1700

COPY MAILED

JUL 2 9 2008

In re Application of	:	
Volker Stanjek et al.	:	
Application No. 10/854,567	:	DECISION ON PETITION
Filed: September 13, 2007	:	TO WITHDRAW
Attorney Docket No. WAS 0650 PUSA1	:	FROM RECORD
	:	

This is a decision on the Request to Withdraw as attorney or agent of record under 37 C.F.R. § 1.36(b), filed June 11, 2008.

The request is **moot because a revocation of power of attorney has been previously filed**.

A review of the file record indicates that the power of attorney to Donald S. Holland and all attorneys/agents associated with customer number 27804 has been revoked by the assignee of the patent application on June 12, 2008. Accordingly, the request to withdraw under 37 C.F.R. § 1.36(b) is moot.

All future communications from the Office will continue to be directed to the below-listed address until otherwise notified by applicant.

Telephone inquires concerning this decision should be directed to Kimberly Inabinet at 571-272-4618.

Kimberly Inabinet
Petitions Examiner
Office of Petitions

cc: The Eclipse Group
10605 Balboa Boulevard, Suite 300
Granada Hills, CA 91344

UNITED STATES PATENT AND TRADEMARK OFFICE

UNITED STATES DEPARTMENT OF COMMERCE
United States Patent and Trademark Office
Address: COMMISSIONER FOR PATENTS
P.O. Box 1450
Alexandria, Virginia 22313-1450
www.uspto.gov

APPLICATION NUMBER	FILING OR 371(C) DATE	FIRST NAMED APPLICANT	ATTY. DOCKET NO./TITLE
10/854,567	05/25/2004	Moises Calderon	

CONFIRMATION NO. 8685

POWER OF ATTORNEY NOTICE

27804
HOLLAND & BONZAGNI, P.C.
171 DWIGHT ROAD, SUITE 302
LONGMEADOW, MA 01106-1700

OC000000030542085

Date Mailed: 07/29/2008

NOTICE REGARDING CHANGE OF POWER OF ATTORNEY

This is in response to the Power of Attorney filed 06/12/2008.

- The Power of Attorney to you in this application has been revoked by the assignee who has intervened as provided by 37 CFR 3.71. Future correspondence will be mailed to the new address of record(37 CFR 1.33).

/ddinh/

Office of Data Management, Application Assistance Unit (571) 272-4000, or (571) 272-4200, or 1-888-786-0101

UNITED STATES PATENT AND TRADEMARK OFFICE

COMMISSIONER FOR PATENTS
UNITED STATES PATENT AND TRADEMARK OFFICE
P.O. BOX 1450
ALEXANDRIA, VA 22313-1450
www.uspto.gov

COPY MAILED

MAR 16 2009

OFFICE OF PETITIONS

THERAVANCE, INC.
901 GATEWAY BOULEVARD
SOUTH SAN FRANCISCO CA 94080

In re Application :
Kaniga :
Application No. 10/854,575 : PATENT TERM ADJUSTMENT
Filed: May 26, 2004 :
Dkt. No.: P-159-US1 :

This is a decision on the "REQUEST FOR RECONSIDERATION OF PATENT TERM ADJUSTMENT INDICATED IN NOTICE OF ALLOWANCE (37 C.F.R. § 1.705," filed December 4, 2008. This matter is being properly treated as an application for patent term adjustment pursuant to 37 CFR 1.705(b).

The application for patent term adjustment (PTA) under 37 CFR 1.705(b) is **HELD IN ABEYANCE IN PART**.

The Determination of Patent Term Adjustment under 35 U.S.C. 154(b), mailed September 11, 2008, indicated a patent term adjustment (PTA) to date of 368 days. The instant application for PTA was timely filed December 4, 2008 along with the issue fee payment. Applicant argues that the application is entitled to an additional adjustment of 150 days pursuant to 37 CFR 1.702(b).

The correct PTA at the time of the allowance is 368 days, as indicated in the Determination of Patent Term Adjustment.

Applicant does not contest the adjustment to date of 457 days or the reduction to date of 89 days.

Instead, the instant application for patent term adjustment requests reconsideration of the patent term adjustment as it relates to the Office's failure to issue the patent within three years of the filing date of the application. A decision is being **held in abeyance** until after the actual patent date. Knowledge of the actual date the patent issues is required to calculate the amount, if any, of additional patent term for Office failure to issue the patent within three years. *See*, 37 CFR 1.703(b).

Applicants are given **TWO (2) MONTHS** from the issue date of the patent to file a written request for reconsideration of the patent term adjustment for Office failure to issue the patent within three years. A copy of this decision should accompany the request.

Applicants may seek such consideration without payment of an additional fee. However, as to all other bases for seeking reconsideration of the patent term adjustment indicated in the patent, all requirements of 37 CFR 1.705(d) must be met. Requests for reconsideration on other bases must be timely filed and must include payment of the required fee.

Applicants are reminded that if an application is entitled to an adjustment under 35 USC 154(b)(1)(B), the entire period during which the application was pending (except for periods excluded under 35 USC 154(b)(1)(B)(i)-(iii)), and not just the period beginning three years after the actual filing date of the application, is the period of delay under 35 USC 154(b)(1)(B) in determining whether periods of delay overlap under 35 USC 154(b)(2)(A).

Thus, any days of delay for Office issuance of the patent more than three years after the filing date of the application which overlap with the days of patent term adjustment accorded prior to the issuance of the patent will not result in any additional patent term adjustment. *See*, 35 USC 154(b)(1)(B), 35 USC 154(b)(2)(A), and 37 CFR § 1.703(f). *See, also, Revision of Patent Term Extension and Patent Term Adjustment Provisions; Final Rule*, 69 Fed. Reg. 21704 (April 22, 2004).

In view thereof, as of the time of allowance, the application is entitled to an adjustment of 368 days.

Receipt is hereby acknowledged of the required PTA application fee of $200.00.

Applicants are further advised that the patent term adjustment indicated in the patent will include any additional patent term accrued pursuant to §§ 1.702(a)(4) and 1.702(b).

This application is being forwarded to the Office of Data Management for processing into a patent.

Telephone inquiries specific to this matter should be directed to Petitions Attorney Alesia M. Brown at (571) 272-3205.

Kery Fries

Kery Fries
Senior Legal Advisor
Office of Patent Legal Administration
Office of Deputy Commissioner
for Patent Examination Policy

UNITED STATES PATENT AND TRADEMARK OFFICE

COMMISSIONER FOR PATENTS
UNITED STATES PATENT AND TRADEMARK OFFICE
P.O. BOX 1450
ALEXANDRIA, VA 22313-1450
www.uspto.gov

THERAVANCE, INC.
901 GATEWAY BOULEVARD
SOUTH SAN FRANCISCO CA 94080

In re Patent No. 7,521,418	:
Issued: April 21, 2009	:
Application No. 10/854,575	: PATENT TERM ADJUSTMENT
Filed: May 26, 2004	:
Dkt. No.: P-159-US1	:

This is a decision on the "REQUEST FOR RECONSIDERATION OF PATENT TERM ADJUSTMENT INDICATED ON GRANTED PATENT (37 C.F.R. § 1.705(d))," filed April 21, 2009. Patentee requests correction of the patent term adjustment from 379 days to 529 days. Patentee requests this correction on the sole basis that the Office took in excess of three years to issue the above-referenced patent.

The application for patent term adjustment (PTA) under 37 CFR 1.705(d) is **DISMISSED**.

The above-identified application matured into U.S. Pat. No. 7,521,418 on April 21, 2009. The patent issued with a patent term adjustment of 379 days. The application for patent term adjustment was timely filed in accordance with 37 CFR 1.705(d). Patentee argues that in view of Wyeth v. Dudas, Civil Action No. 07-1492, 580 F. Supp. 2d 138, 88 U.S.P.Q. 2d 1538 (D.D.C. Sept. 30, 2008), the patent is entitled to an adjustment of 529 days (468 days pursuant to 35 USC 154(b)(1)(A) *plus* 150 days pursuant to 35 USC 154(b)(1)(B) *less* 89 days of applicant delay).

Under 37 CFR 1.703(f), patentees are entitled to a period of patent term adjustment equal to the period of delays based on the grounds set forth in 37 CFR 1.702 reduced by the period of time equal to the period of time during which patentees failed to engage in reasonable efforts to conclude prosecution pursuant to 37 CFR 1.704. In other words, patentees are entitled to the period of Office delay reduced by the period of applicant delay.

The Office asserts that as of the filing of the request for continued examination (RCE) on October 24, 2007, the application was pending three years and 150 days after its filing date (May 27, 2007 to October 23, 2007). The Office agrees that as of the filing of the RCE, certain action was not taken within the specified time frame, and thus, the entry of a period of adjustment of 391 days is correct. At issue is whether patentees should accrue 150 days of patent term adjustment for the Office taking in excess of three years to issue the patent, as well as 391 days for Office failure to take a certain action within a specified time frame (or examination delay).

The Office contends that the period of 150 days of delay in issuing the patent overlaps with the 391 days of examination delay under 37 CFR 1.702(a). Patentees' calculation of the period of overlap is inconsistent with the Office's interpretation of this provision. 35 U.S.C. 154(b)(2)(A) limits the adjustment of patent term, as follows:

35 U.S.C. 154(b)(2)(A) limits the adjustment of patent term, as follows:

> To the extent that the periods of delay attributable to grounds specified in paragraph (1) overlap, the period of any adjustment granted under this subsection shall not exceed the actual number of days the issuance of the patent was delayed.

As explained in *Explanation of 37 CFR 1.703(f)*[1] *and of the United States Patent and Trademark Office Interpretation of 35 U.S.C. 154(b)(2)(A)*, 69 Fed. Reg. 34283 (June 21, 2004), the Office interprets 35 U.S.C. 154(b)(2)(A) as permitting either patent term adjustment under 35 U.S.C. 154(b)(1)(A)(i)-(iv), or patent term adjustment under 35 U.S.C. 154(b)(1)(B), but not as permitting patent term adjustment under both 35 U.S.C. 154(b)(1)(A)(i)-(iv) and 154(b)(1)(B). Accordingly, the Office implements the overlap provision as follows:

> If an application is entitled to an adjustment under 35 U.S.C. 154(b)(1)(B), the entire period during which the application was pending (except for periods excluded under 35 U.S.C. 154(b)(1)(B)(i)-(iii)), and not just the period beginning three years after the actual filing date of the application, is the period of delay under 35 U.S.C. 154(b)(1)(B) in determining whether periods of delay overlap under 35 U.S.C. 154(b)(2)(A). Thus, any days of delay for Office issuance of the patent more than 3 years after the filing date of the application, which overlap with the days of patent term adjustment accorded prior to the issuance of the patent will not result in any additional patent term adjustment. See 35 U.S.C. 154(b)(1)(B), 35 U.S.C. 154(b)(2)(A), and 37 CFR § 1.703(f). See *Changes to Implement Patent Term Adjustment Under Twenty Year Term; Final Rule*, 65 Fed. Reg. 54366 (Sept. 18, 2000). See also *Revision of Patent Term Extension and Patent Term Adjustment Provisions; Final Rule*, 69 Fed. Reg. 21704 (April 22, 2004), 1282 Off. Gaz. Pat. Office 100 (May 18, 2004).

Further, as stated in the *Explanation of 37 CFR 1.703(f) and of the United States Patent and Trademark Office Interpretation of 35 U.S.C. 154(b)(2)(A)*, the Office has consistently taken the position that if an application is entitled to an adjustment under the three-year pendency provision of 35 U.S.C. 154(b)(1)(B), the entire period during which the application was pending before the Office (except for periods excluded under 35 U.S.C. 154(b)(1)(B)(i)-(iii)), and not just the period beginning three years after the actual filing date of the application, is the relevant period under 35 U.S.C. 154(b)(1)(B) in determining whether periods of delay "overlap" under 35 U.S.C. 154(b)(2)(A).

This interpretation is consistent with the statute. Taken together the statute and rule provide that to the extent that periods of delay attributable to grounds specified in 35 U.S.C. 154(b)(1) and in

---

[1] Likewise, 37 CFR 1.703(f) provides that:

> To the extent that periods of delay attributable to the grounds specified in §1.702 overlap, the period of adjustment granted under this section shall not exceed the actual number of days the issuance of the patent was delayed.

corresponding §1.702 overlap, the period of adjustment granted shall not exceed the actual number of days the issuance of the patent was delayed.

In this instance, the relevant period under 35 U.S.C. 154(b)(1)(B) in determining whether periods of delay "overlap" under 35 U.S.C. 154(b)(2)(A) is the period during which the application was pending before the Office beginning on the application filing date under 35 U.S.C. 111(a), May 26, 2004, and ending on October 23, 2007, the day before the date that the RCE was filed on October 24, 2007.

Pursuant to 35 U.S.C. 154(b)(1)(A) and 37 CFR 1.702(a)(1), 391 days of patent term adjustment were accorded during the pendency of the application for Office delay prior to the filing of the RCE. Pursuant to 35 U.S.C. 154(b)(1)(B) and 37 CFR 1.702(b), 150 days of patent term adjustment accrued at the time of submission of the RCE for Office issuance of the patent more than three years after the application filing date.

The 150 days of patent term adjustment under 37 CFR 1.702(b) overlaps with the 391 days of patent term adjustment under 37 CFR 1.702(a)(1). Entry of both the 391 days and the 150 days is neither permitted nor warranted given that 391 days is the actual number of days issuance of the patent was delayed at the time of submission of the RCE.

Accordingly, at issuance, the Office properly entered 379 days of patent term adjustment, having considered the 150 days of Office delay under the three-year pendency provision in conjunction with the 391 days of delay under 37 CFR 1.702(a)(1) that accrued prior to the filing of the RCE as well as the adjustments of 66 days under 37 CFR 1.702(a)(2) and 11 days under 37 CFR 1.702(a)(4) that occurred subsequent to the filing of the RCE, reduced 89 days for applicant delay.

In view thereof, no adjustment to the patent term will be made.

No additional fees are due in connection with this matter.

Telephone inquiries specific to this matter should be directed to the undersigned at (571) 272-3205.

Alesia M. Brown
Petitions Attorney
Office of Petitions

UNITED STATES PATENT AND TRADEMARK OFFICE

UNITED STATES DEPARTMENT OF COMMERCE
United States Patent and Trademark Office
Address: COMMISSIONER FOR PATENTS
P.O. Box 1450
Alexandria, Virginia 22313-1450
www.uspto.gov

THERAVANCE, INC.
901 GATEWAY BOULEVARD
SOUTH SAN FRANCISCO, CA 94080

Mail Date: 04/21/2010

Applicant	: Kone Kaniga	: DECISION ON REQUEST FOR
Patent Number	: 7521418	: RECALCULATION of PATENT
Issue Date	: 04/21/2009	: TERM ADJUSTMENT IN VIEW
Appliction No	: 10/854,575	: OF WYETH AND NOTICE OF INTENT TO
Filed	: 05/26/2004	: ISSUE CERTIFICATE OF CORRECTION
		:

The Request for Recalculation is **GRANTED** to the extent indicated.

The patent term adjustment has been determined to be **529** days. The USPTO will *sua sponte* issue a certificate of correction reflecting the amount of PTA days determined by the recalculation.

Prior to the issuance of the certificate of correction, the USPTO will afford patentee an opportunity to be heard and request reconsideration. Accordingly, patentee has **one month or thirty (30) days**, whichever is longer, to file a request for reconsideration of this patent term adjustment calculation. See 35 U.S.C. 154(b)(3)(B)(ii) and 37 CFR 1.322(a)(4). No extensions of time will be granted under 37 CFR 1.136.

Patentee should use document code PET.OP if electronically filing a request for reconsideration of this patent term adjustment calculation. The patentee must also include the information required by 37 CFR 1.705(b)(2) and the fee required by 37 CFR 1.18(e). If patentee does not file a timely request for reconsideration of this patent term adjustment calculation including the information required by 37 CFR 1.705(b)(2) and the fee required by 37 CFR 1.18(e), the USPTO will issue a certificate of correction reflecting the PTA determination noted above.

Patentee should be aware that in order to preserve the right to review in the United States District Court for the District of Columbia of the USPTO patent term adjustment determination, patentee must ensure that he or she also take the steps required under 35 U.S.C. 154(b)(4)(A) in a timely manner. Nothing in the request for recalculation should be construed as providing an alternative time frame for commencing a civil action under 35 U.S.C. 154(b)(4)(A).

Any questions concerning this decision should be directed to the Office of Patent Legal Administration at 571-272-7702.

UNITED STATES PATENT AND TRADEMARK OFFICE

Commissioner for Patents
United States Patent and Trademark Office
P.O. Box 1450
Alexandria, VA 22313-1450
www.uspto.gov

Christopher C Winslade
McAndrews Held & Malloy LTD
34th Floor
500 West Madison Street
Chicago IL 60661

MAILED
JUL 23 2010
OFFICE OF PETITIONS

In re Application of :
Prakasam, et al. :
Application No. 10/854,592 : ON APPLICATION FOR
Filed: May 26, 2004 : PATENT TERM ADJUSTMENT
Atty Docket No. 14535US02 :

This is in response to the APPLICATION FOR RECONSIDERATION OF THE DETERMINATION OF PATENT TERM ADJUSTMENT UNDER 35 U.S.C. § 154(b) ACCOMPANYING THE NOTICE OF ALLOWANCE (37 CFR § 1.705)," filed June 22, 2010. Applicants submit that the correct patent term adjustment to be indicated on the patent is one thousand seven hundred thirty-six (1736) days, not eight hundred sixty-two (862) days as calculated by the Office as of the mailing of the initial determination of patent term adjustment. Applicants request this correction solely on the basis that the Office will take in excess of three years to issue this patent.

As the instant application for patent term adjustment requests reconsideration of the patent term adjustment as it relates to the Office's failure to issue the patent within 3 years of the filing date, the application for patent term adjustment under 37 CFR 1.705(b) is **DISMISSED as PREMATURE**.

Knowledge of the actual date the patent issues is required to calculate the amount, if any, of additional patent term patentees are entitled to for Office failure to issue the patent within 3 years. See § 1.702(b). The computer will not undertake the § 1.702(b) calculation until the actual date of issuance of the patent has been determined. Likewise, the computer will not calculate any further Office delay under § 1.702(a)(4) or applicant delay under § 1.704(c)(10) until the actual date of issuance of the patent has been determined. As such, the Office

can not make a determination on the correctness of the patent term adjustment until the patent has issued.

Requesting reconsideration of the patent term adjustment to be indicated on the patent under 37 CFR 1.705(b) based on the initial determination of patent term adjustment and a projected issuance date of the patent is premature. Accordingly, it is appropriate to dismiss as premature such a request.

Rather than file an application for patent term adjustment under 37 CFR 1.705(b) contesting the 37 CFR 1.702(b) calculation at the time of the mailing of the notice of allowance, applicants are advised that they may wait until the time of the issuance of the patent and file a request for reconsideration of the patent term adjustment pursuant to 37 CFR 1.705(d). As the USPTO does not calculate the amount of time earned pursuant to 37 CFR 1.702(b) until the time of the issuance of the patent, the Office will consider any request for reconsideration of the patent term adjustment due to an error in the calculation of 37 CFR 1.702(b) to be timely if the request for reconsideration is filed within two months of the issuance of the patent. However, as to all other bases for contesting the initial determination of patent term adjustment received with the notice of allowance, applicants must timely file an application for patent term adjustment prior to the payment of the issue fee[1].

The Office acknowledges submission of the $200.00 fee set forth in 37 CFR 1.18(e) for consideration of the application for patent term adjustment under 37 CFR 1.705(b).

Any request for reconsideration of the patent term adjustment indicated on the patent must be timely filed within 2 months after issuance pursuant to 37 CFR 1.705(d) and must include payment of the required fee under 37 CFR 1.18(e).

---

[1] For example, if applicant disputes both the calculation of patent term adjustment under 37 CFR 1.702(a)(1) for Office failure to mail a first Office action or notice of allowance not later than fourteen months after the date on which the application was filed and under 37 CFR 1.702(b) for Office failure to issue a patent within three years of the actual filing date of the application, then applicant must still timely file an application for patent term adjustment prior to the payment of the issue fee to contest the calculation of Office delay in issuing a first Office action or notice of allowance. See 37 CFR 1.705(b) and 35 U.S.C. 154(b)(3)(B). A dispute as to the calculation of the §1.702(a)(1) period raised on request for reconsideration of patent term adjustment under 37 CFR 1.705(d) will be dismissed as untimely filed.

The Office of Data Management has been advised of this decision. This application is being referred to the Office of Data Management for issuance of the patent.

Telephone inquiries specific to this decision should be directed to the undersigned at (571) 272-3230.

Shirene Willis Brantley

Shirene Willis Brantley
Senior Petitions Attorney
Office of Petitions

UNITED STATES PATENT AND TRADEMARK OFFICE

UNITED STATES DEPARTMENT OF COMMERCE
United States Patent and Trademark Office
Address: COMMISSIONER FOR PATENTS
P.O. Box 1450
Alexandria, Virginia 22313-1450
www.uspto.gov

CHRISTENSEN, O'CONNOR, JOHNSON, KINDNESS, PLLC
1420 FIFTH AVENUE
SUITE 2800
SEATTLE, WA 98101-2347

Mail Date: 04/20/2010

Applicant	: I-Yeu Shen	: DECISION ON REQUEST FOR
Patent Number	: 7630869	: RECALCULATION of PATENT
Issue Date	: 12/08/2009	: TERM ADJUSTMENT IN VIEW
Appliction No	: 10/854,608	: OF WYETH AND NOTICE OF INTENT TO
Filed	: 05/26/2004	: ISSUE CERTIFICATE OF CORRECTION
		:

The Request for Recalculation is **GRANTED** to the extent indicated.

The patent term adjustment has been determined to be **1166** days. The USPTO will *sua sponte* issue a certificate of correction reflecting the amount of PTA days determined by the recalculation.

Prior to the issuance of the certificate of correction, the USPTO will afford patentee an opportunity to be heard and request reconsideration. Accordingly, patentee has **one month or thirty (30) days**, whichever is longer, to file a request for reconsideration of this patent term adjustment calculation. See 35 U.S.C. 154(b)(3)(B)(ii) and 37 CFR 1.322(a)(4). No extensions of time will be granted under 37 CFR 1.136.

Patentee should use document code PET.OP if electronically filing a request for reconsideration of this patent term adjustment calculation. The patentee must also include the information required by 37 CFR 1.705(b)(2) and the fee required by 37 CFR 1.18(e). If patentee does not file a timely request for reconsideration of this patent term adjustment calculation including the information required by 37 CFR 1.705(b)(2) and the fee required by 37 CFR 1.18(e), the USPTO will issue a certificate of correction reflecting the PTA determination noted above.

Patentee should be aware that in order to preserve the right to review in the United States District Court for the District of Columbia of the USPTO patent term adjustment determination, patentee must ensure that he or she also take the steps required under 35 U.S.C. 154(b)(4)(A) in a timely manner. Nothing in the request for recalculation should be construed as providing an alternative time frame for commencing a civil action under 35 U.S.C. 154(b)(4)(A).

Any questions concerning this decision should be directed to the Office of Patent Legal Administration at 571-272-7702.

UNITED STATES PATENT AND TRADEMARK OFFICE

Commissioner for Patents
United States Patent and Trademark Office
P.O. Box 1450
Alexandria, VA 22313-1450
www.uspto.gov

HOWREY LLP-CA
C/O IP DOCKETING DEPARTMENT
2941 FAIRVIEW PARK DRIVE, SUITE 200
FALLS CHURCH VA 22042-2924

COPY MAILED

MAR 0 2 2009

OFFICE OF PETITIONS

In re Application of	:	
O'REILLY, David J. et al.	:	
Application No. 10/854,609	:	DECISION ON PETITION
Filed: May 24, 2004	:	TO WITHDRAW
Attorney Docket No. **03916.0034.CPUS01**	:	FROM RECORD

This is a decision on the Request to Withdraw as attorney or agent of record under 37 C.F.R. § 1.36(b), filed January 27, 2009.

The request is **moot** because a revocation of power of attorney has been previously filed.

A review of the file record indicates that the power of attorney to CASCADIA INTELLECTUAL PROPERTY has been revoked by the assignee of the patent application on February 25, 2009. Accordingly, the request to withdraw under 37 C.F.R. § 1.36(b) is moot.

All future communications from the Office will continue to be directed to the below-listed address until otherwise notified by applicant.

Telephone inquires concerning this decision should be directed to Tredelle Jackson at 571-272-2783.

Tredelle D. Jackson
Paralegal Specialist
Office of Petitions

cc: **ENTELOS, INC.**
C/O LAW OFFICES OF KAREN E. FLICK
P.O. BOX 515
EL GRANADA, CA 94018-0515

UNITED STATES PATENT AND TRADEMARK OFFICE

Commissioner for Patents
United States Patent and Trademark Office
P.O. Box 1450
Alexandria, VA 22313-1450
www.uspto.gov

CYMER INC
LEGAL DEPARTMENT
17075 Thornmint Court
SAN DIEGO CA 92127-2413

COPY MAILED

FEB 01 2007

OFFICE OF PETITIONS

In re Application of :
Knowles, et al. :
Application No. 10/854,614 : ON PETITION
Filed: May 25, 2004 :
Attorney Docket No. 1999-0013-15 :
For: LINE SELECTED F2 TWO CHAMBER LASER SYSTEM

This is a decision on the petition under 37 CFR 1.181, filed December 6, 2006, to withdraw the holding of abandonment.

The petition under 37 CFR 1.181 is **DISMISSED**.

Any further petition to revive the above-identified application must be submitted within TWO (2) MONTHS from the mail date of this decision. Extensions of time under 37 CFR 1.136(a) are permitted. This is **not** final agency action within the meaning of 5 U.S.C. § 704.

The Office contends that the above-identified application became abandoned for failure to submit a reply to the June 13, 2006 Notice of Allowance and Fee(s) Due, which set a three month period for reply. No reply being received, the Office considered this application abandoned on September 14, 2006. A Notice of Abandonment was mailed on November 6, 2006.

Petitioners allege that the June 13, 2006 Notice was not received.

The showing required to establish non-receipt of an Office communication must include:

1. A statement from the practitioner stating that the Office communication was not received by the practitioner and attesting to the fact that a search of the file jacket and docket records indicates that the Office communication was not received.
2. A copy of the docket record where the non-received Office communication would have been entered had it been received and docketed must be attached to and referenced in practitioner's statement.[1]

[1] See notice entitled "Withdrawing the Holding of Abandonment When Office Actions Are Not Received," 1156 O.G. 53 (November 16, 1993).

A review of the record indicates no irregularity in the mailing of the June 13, 2006 Notice, and in the absence of any irregularity there is a strong presumption that the communication was properly mailed to the applicant at the correspondence address of record. This presumption may be overcome by a showing that the aforementioned communication was not in fact received.

The showing in the instant petition is not sufficient to withdraw the holding of abandonment because practitioner did not include a statement attesting to the fact that a search of the file jacket was conducted.

The petition is dismissed.

A petition to withdraw the holding of abandonment is a feeless petition. The $130.00 petition fee submitted on December 6, 2006 will be credited to deposit account no. 03-4060.

Further correspondence with respect to this matter should be addressed as follows:

By mail:
Mail Stop PETITION
Commissioner for Patents
Post Office Box 1450
Alexandria, VA 22313-1450

By hand:
U.S. Patent and Trademark Office
Customer Service Window, Mail Stop Petition
Randolph Building
401 Dulany Street
Alexandria, VA 22314

By FAX: (571) 273-8300 - ATTN: Office of Petitions

Telephone inquiries may be directed to the undersigned at (571) 272-3230.

Shirene Willis Brantley
Senior Petitions Attorney
Office of Petitions

UNITED STATES PATENT AND TRADEMARK OFFICE

COMMISSIONER FOR PATENTS
UNITED STATES PATENT AND TRADEMARK OFFICE
P.O. BOX 1450
ALEXANDRIA, VA 22313-1450
www.uspto.gov

CYMER INC
LEGAL DEPARTMENT
17075 Thornmint Court
SAN DIEGO CA 92127-2413

COPY MAILED

FEB 2 2 2007

OFFICE OF PETITIONS

In re Application of :
Knowles, et al. :
Application No. 10/854,614 :
Filed: May 25, 2004 :
Attorney Docket No. 1999-0013-15 :
For: LINE SELECTED F2 TWO CHAMBER LASER SYSTEM

ON PETITION

This is a decision on the reconsideration petition under 37 CFR 1.181, filed February 8, 2007, to withdraw the holding of abandonment.

The petition under 37 CFR 1.181 is **GRANTED**.

The Office contended that the above-identified application became abandoned for failure to submit a reply to the June 13, 2006 Notice of Allowance and Fee(s) Due, which set a three month period for reply. No reply being received, the Office considered this application abandoned on September 14, 2006. A Notice of Abandonment was mailed on November 6, 2006.

Petitioners allege that the June 13, 2006 Notice was not received.

The showing required to establish non-receipt of an Office communication must include:

1. A statement from the practitioner stating that the Office communication was not received by the practitioner and attesting to the fact that a search of the file jacket and docket records indicates that the Office communication was not received.
2. A copy of the docket record where the non-received Office communication would have been entered had it been received and docketed must be attached to and referenced in practitioner's statement.[1]

Petitioners have submitted a copy of the docket record where the requirement would have been entered had the June 13, 2006 Notice been received. In addition, practitioner referenced the

[1] See notice entitled "Withdrawing the Holding of Abandonment When Office Actions Are Not Received," 1156 O.G. 53 (November 16, 1993).

docket record in the petition and stated that a review of the application's file jacket and docket record for the June 13, 2006 Notice was fruitless.

Petitioners have established non-receipt. The petition is **granted,** the holding of abandonment is withdrawn, and the November 6, 2006 Notice of Abandonment is **vacated**.

A petition to withdraw the holding of abandonment is a feeless petition. The $130.00 petition fee submitted on February 8, 2007 will be credited to deposit account no. 03-4060.

Petitioners have filed a proper reply to the June 13, 2006 Notice with the present petition. As such, there is no need to re-mail the June 13, 2006 Notice with a new period set for reply.

After the mailing of this decision, the application will be forwarded to Publications Division for processing into a patent.

Telephone inquiries may be directed to the undersigned at (571) 272-3230.

Shirene Willis Brantley
Shirene Willis Brantley
Senior Petitions Attorney
Office of Petitions

UNITED STATES PATENT AND TRADEMARK OFFICE

Commissioner for Patents
United States Patent and Trademark Office
P.O. Box 1450
Alexandria, VA 22313-1450
www.uspto.gov

STERNE, KESSLER, GOLDSTEIN & FOX PLLC
1100 NEW YORK AVENUE, N.W.
WASHINGTON DC 20005

COPY MAILED

MAR 24 2006

OFFICE OF PETITIONS

In re Patent No. 6,915,358	:	
Issued: July 5, 2005	:	
Application No. 10/854,633	:	ON PETITION
Filed: May 27, 2004	:	
Attorney Docket No. 1875.1770001	:	

This is a decision on the petition under 37 CFR 1.182, filed October 19, 2005, requesting issuance of a duplicate Letters Patent for the above-identified application.

The petition is **GRANTED**.

The Publishing Division is directed to issue a duplicate Letters Patent.

Any questions concerning this matter may be directed to Petitions Examiner Liana Chase at (571) 272-3206. Any questions concerning issuance of the duplicate Letters Patent should be directed to Kimberly Terrell at (703) 308-9250.

A copy of this decision is being forwarded to Publishing Division for issuance of a duplicate Letters Patent.

Liana Chase for
Frances Hicks
Petitions Examiner
Office of Petitions

cc: Kimberly Terrell, P/OPPD, South Tower 8C41 (FAX 703-746-4658)

UNITED STATES PATENT AND TRADEMARK OFFICE

Commissioner for Patents
United States Patent and Trademark Office
P.O. Box 1450
Alexandria, VA 22313-1450
www.uspto.gov

STEPHEN B. ACKERMAN
28 DAVIS AVENUE
POUGHKEEPSIE NY 12603

COPY MAILED

JUN 01 2007

OFFICE OF PETITIONS

In re Application of
Li et al.
Application No. 10/854,651
Filed: May 26, 2004
Attorney Docket No. HT04-015
Title of Invention: Free Layer For CPP GMR Having Iron Rich Nife

ON PETITION

This is a decision on the petition under 37 CFR §1.181 filed April 27, 2007 to withdraw the holding of abandonment.

The petition filed under 37 CFR 1.181 is **Granted**.

This application was held abandoned October 22, 2006 for failure to timely reply to the restriction requirement mailed on September 21, 2006. The restriction requirement set a one (1) month extendable time period for reply. A Notice of Abandonment was mailed April 18, 2007.

Petitioner contends a reply to the restriction requirement was received in the Office on October 16, 2006. In support of petitioner's contention, petitioner has submitted a stamped postcard receipt. Petitioner has also provided a copy of the response which includes a certificate of mailing dated October 9, 2006 pursuant to 37 CFR 1.8.

A review of the evidence presented shows that the response contained the incorrect application number. The correct application number is 10/8**54**,651 not 10/845,651 which was included on the response. The response did contain the correct art unit, name of the examiner, attorney docket number, filing date, and title of invention.

Correspondence directed to the Patent and Trademark Office concerning a previously filed application for a patent must identify the application number and filing date assigned to that application by the Office. See, 37 CFR 1.5(a). In the above-referenced application, applicant failed to correctly identify the application by citing an incorrect application number in the correspondence. The Office elects, in this instance, to treat applicant's transposition of numbers as a correctable minor error as permitted under MPEP 502. However, applicant is reminded that minor errors, such as occurred in the instant application, are to be avoided in the future by the careful review of correspondence prior to submission to the Office.

The response submitted October 16, 2006 has been located. Based on the facts stated in the instant petition and the corroborative evidence provided, it is concluded that the holding of abandonment was improperly imposed.

The Notice of Abandonment is hereby vacated and the holding of abandonment is withdrawn.

This application is being forwarded to the Art Unit 2627 for further processing.

Telephone inquiries concerning this matter should be directed to the undersigned at (571) 272-3215.

Charlema R. Grant

Charlema R. Grant
Petition Attorney
Office of Petitions

UNITED STATES PATENT AND TRADEMARK OFFICE

Commissioner for Patents
United States Patent and Trademark Office
P.O. Box 1450
Alexandria, VA 22313-1450
www.uspto.gov

DAY PITNEY LLP
7 TIMES SQUARE
NEW YORK, NY 10036-7311

COPY MAILED

AUG 03 2007

OFFICE OF PETITIONS

In re Application of	:	
TASAKA, et al.	:	
Application No. 10/854,654	:	DECISION ON PETITION
Filed: May 26, 2004	:	TO WITHDRAW
Attorney Docket No. **3094-42 DIV.**	:	FROM RECORD
	:	

This is a decision on the Request to Withdraw as attorney or agent of record under 37 C.F.R. § 1.36(b), filed March 26, 2007.

The request is **NOT APPROVED** as moot.

A review of the file record indicates that the power of attorney to **DAY PITNEY LLP** has been revoked by the assignee of the patent application on June 4, 2007. Accordingly, the request to withdraw under 37 C.F.R. § 1.36(b) is moot.

All future communications from the Office will continue to be directed to the below-listed address until otherwise notified by applicant.

Telephone inquires concerning this decision should be directed to the undersigned at 571-272-7253.

Monica A. Graves
Petitions Examiner
Office of Petitions

cc: **OLIFF & BERRIDGE PLC**
PO BOX 19928
ALEXANDRIA, VA 22320

UNITED STATES PATENT AND TRADEMARK OFFICE

COMMISSIONER FOR PATENTS
UNITED STATES PATENT AND TRADEMARK OFFICE
P.O. BOX 1450
ALEXANDRIA, VA 22313-1450
WWW.USPTO.GOV

Paper No. None

MARGER JOHNSON & MCCOLLOM, P.C.
1030 SW MORRISON STREET
PORTLAND OR 97205

COPY MAILED

FEB 25 2005

OFFICE OF PETITIONS

In re Application of :
Eberhard Bunner :
Application No. 10/854,658 :
Filing Date: May 25, 2004 :
Attorney Docket No. 1482-174 :
Title: AMPLIFIER WITH CAPACITOR :
SELECTION :

DECISION ON PETITION UNDER
37 C.F.R. §1.10(D)

This is a decision on the petition under 37 C.F.R. §1.10(d), filed October 12, 2004, requesting the according of a filing date of May 25, 2004 to application number 10/854,658.

The application was deposited on May 27, 2004. Shortly thereafter, the Office mailed a filing receipt, indicating that application number 10/854,658 had been accorded a filing date of May 24, 2004.

With the instant petition, Petitioner has included a copy of the Express Mail label number EV432806258US[1].

Petitioner has alleged that the application was deposited on May 25, 2004, and the Patent Office has incorrectly assigned a filing date of May 24, 2004 to the instant application. Petitioner has included a copy of the Express Mail label, and it is noted that it bears a "date-in" of May 24, 2004. Petitioner has asserted that this information was incorrectly entered, and the field should indicate that the package was received by the USPS On May 25, 2004.

1 The Utility Patent Application Transmittal sheet has been located in the electronic file, and it is noted that it contains this same Express Mail label number.

A check of the Office's USPS Express Mail Finder Database computer program was inconclusive. A check of the United States Postal Service's website (http://www.usps.com/shipping/trackandconfirm.htm) was also inconclusive, in that it stated that the information pertaining to this Express Mail label number is stored off-line. A copy of the latter search result is enclosed.

However, Petitioner has enclosed a print-out of this same website, presumably from prior to the information being taken off-line. This print-out shows an entry of "ACCEPTANCE, May 25, 2004, 4:44 pm, PORTLAND, OR 97201." Thus, it is clear that the package was deposited with the USPS on this date.

Although the application received a filing date of May 24, 2004, the evidence is convincing that the application papers were filed on May 25, 2004, and the Patent Office assigned the incorrect date to the application. Therefore, the application was entitled to a filing date of May 25, 2004.

Accordingly, the petition is **GRANTED**.

There is no fee associated with the filing of a petition under 37 C.F.R. §1.10(d). As such, the petition fee will be refunded to Petitioner's Deposit Account, as authorized in the petition.

The application file is being returned to the Office of Initial Patent Examination for further processing with a filing date of May 25, 2004, as well as the mailing of a corrected filing receipt.

The general phone number for the Office of Petitions which should be used for status requests is (571) 272-3282. Telephone inquiries regarding this decision should be directed to the undersigned at (571) 272-3225.

Paul Shanoski

Paul Shanoski
Senior Attorney
Office of Petitions
United States Patent and Trademark Office

Encl.

UNITED STATES PATENT AND TRADEMARK OFFICE

Commissioner for Patents
United States Patent and Trademark Office
P.O. Box 1450
Alexandria, VA 22313-1450
www.uspto.gov

MAILED

MAY 13 2010

OFFICE OF PETITIONS

GLENN PATENT GROUP
3475 EDISON WAY, SUITE L
MENLO PARK, CA 94025

In re Application of
W. Daniel Hillis et al
Application No. 10/854,662
Filed: May 25, 2004
Attorney Docket No. APPL0048

ON PETITION

This is a decision on the petition, filed May 12, 2010 under 37 CFR 1.313(c)(2) to withdraw the above-identified application from issue after payment of the issue fee.

The petition is **GRANTED**.

The above-identified application is withdrawn from issue for consideration of a submission under 37 CFR 1.114 (request for continued examination). See 37 CFR 1.313(c)(2).

Petitioner is advised that the issue fee paid on April 29, 2010 in the above-identified application cannot be refunded. If, however, the above-identified application is again allowed, petitioner may request that it be applied towards the issue fee required by the new Notice of Allowance.[1]

Telephone inquiries should be directed to Irvin Dingle at (571) 272-3210.

This matter is being referred to Technology Center AU 2167 for processing of the request for continued examination under 37 CFR 1.114 and for consideration of the concurrently filed Information Disclosure Statement.

/Irvin Dingle/
Irvin Dingle
Petitions Examiner
Office of Petitions

[1] The request to apply the issue fee to the new Notice may be satisfied by completing and returning the new Issue Fee Transmittal Form PTOL-85(b), which includes the following language thereon: Commissioner for Patents is requested to apply the Issue Fee and Publication Fee (if any) or re-apply any previously paid issue fee to the application identified above. Petitioner is advised that, whether a fee is indicated as being due or not, the Issue Fee Transmittal Form **must** be completed and timely submitted to avoid abandonment. Note the language in bold text on the first page of the Notice of Allowance and Fee(s) Due (PTOL-85).

UNITED STATES PATENT AND TRADEMARK OFFICE

COMMISSIONER FOR PATENTS
UNITED STATES PATENT AND TRADEMARK OFFICE
P.O. BOX 1450
ALEXANDRIA, VA 22313-1450
WWW.USPTO.GOV

Paper No. None

JONATHAN SPANGLER
NU VASIVE, INC.
4545 TOWNE CENTRE COURT
SAN DIEGO CA 92121

COPY MAILED
AUG 15 2006
OFFICE OF PETITIONS

In re Application of Bryan Cornwall et al. Application No. 10/854,663 Filed: May 25, 2004 Attorney Docket No.: 055US2 Title: BONE ALLOGRAFT PACKAGING SYSTEM AND RELATED METHODS	DECISION ON PETITION UNDER 37 C.F.R. §1.181

This is a decision on the petition filed May 12, 2006, pursuant to 37 C.F.R. §1.181, requesting that the holding of abandonment in the above-identified application be withdrawn.

The above-identified application became abandoned for failure to reply in a timely manner to the non-final Office action, mailed September 29, 2005, which set a shortened statutory period for reply of three months. No response was received, and no extensions of time under the provisions of 37 C.F.R. §1.136(a) were requested. Accordingly, the above-identified application became abandoned on December 30, 2005. A notice of abandonment was mailed on April 5, 2006.

With the present petition, Petitioner has asserted that a response was submitted on March 29, 2006, and has submitted a postcard receipt which contains a date stamp from the Office of Initial Patent Examination dated April 4, 2006.

Petitioner has submitted a copy of this submission, and it is noted that it contains a certificate of facsimile transmission dated March 29, 2006, along with a petition for a three-month extension of time.

It is noted that Petitioner has failed to provide a statement from the individual who executed the certificate of mailing, however the electronic file has been reviewed, and a copy of this response has been located in the same. Furthermore, Office records show that a three-month extension of time was charged to Petitioner's Deposit Account on April 4, 2006.

Petitioner has requested that the holding of abandonment in the above-identified application be withdrawn. It is clear that a response was timely submitted on March 29, 2006. Considering the facts and circumstances of the delay at issue, as set forth on petition, it is concluded that petitioner has met his burden of establishing that a submission was timely submitted.

Accordingly, the petition under 37 C.F.R. §1.181(a) is **GRANTED**. The holding of abandonment is **WITHDRAWN**

The Technology Center will be notified of this decision. The Technology Center's support staff will notify the Examiner of this decision, so that the amendment which was received on April 4, 2006 can be processed.

Telephone inquiries regarding *this decision* should be directed to the undersigned at (571) 272-3225[1]. All other inquiries concerning examination procedures or status of the application should be directed to the Technology Center.

Paul Shanoski
Senior Attorney
Office of Petitions
United States Patent and Trademark Office

1 Petitioner will note that all practice before the Office should be in writing, and the action of the Office will be based exclusively on the written record in the Office. See 37 C.F.R. §1.2. As such, Petitioner is reminded that no telephone discussion may be controlling or considered authority for Petitioner's further action(s).

UNITED STATES PATENT AND TRADEMARK OFFICE

Commissioner for Patents
United States Patent and Trademark Office
P.O. Box 1450
Alexandria, VA 22313-1450
www.uspto.gov

POWELL GOLDSTEIN LLP
901 NEW YORK AVENUE NW
SUITE 300
WASHINGTON, DC 20001-4413

COPY MAILED

DEC 07 2005

OFFICE OF PETITIONS

In re Application of	:
Jeffrey C. Burnham et al	:
Application No. 10/854,677	: DECISION GRANTING PETITION
Filed: May 27, 2004	: UNDER 37 CFR 1.137(b)
Attorney Docket No. 148346.00600	:

This is a decision on the petition under 37 CFR 1.137(b), filed November 18, 2005, to revive the above-identified application.

The petition is **GRANTED**.

The above-identified application became abandoned for failure to reply in a timely manner to the non-final Office action mailed May 16, 2005, which set a shortened statutory period for reply of three (3) months. No extensions of time under the provisions of 37 CFR 1.136(a) were obtained. Accordingly, the above-identified application became abandoned on August 17, 2005.

37 CFR 1.137(b)(3) requires a statement that the entire delay in filing the required reply from the due date for the reply until the filing of a grantable petition pursuant to 37 CFR 1.137(b) was unintentional. Since the statement contained in the instant petition varies from the language required by 37 CFR 1.137(b)(3), the statement contained in the instant petition is being construed as the statement required by 37 CFR 1.137(b)(3).

The petition satisfies the conditions for revival pursuant to the provisions of 37 CFR 1.137(b) in that (1) the reply; (2) the petition fee; and (3) an adequate statement of unintentional delay have been received. Accordingly, the reply to the non-final Office action of May 16, 2005 is accepted as having been unintentionally delayed.

Telephone inquiries concerning this decision should be directed to the undersigned at (571) 272-3218.

This matter is being referred to Technology Center AU 1761 for appropriate action on the IDS and reply received November 18, 2005.

Frances Hicks
Petitions Examiner
Office of Petitions

UNITED STATES PATENT AND TRADEMARK OFFICE

UNITED STATES DEPARTMENT OF COMMERCE
United States Patent and Trademark Office
Address: COMMISSIONER FOR PATENTS
P.O. Box 1450
Alexandria, Virginia 22313-1450
www.uspto.gov

APPL NO.	FILING OR 371 (c) DATE	ART UNIT	FIL FEE REC'D	ATTY.DOCKET NO	DRAWINGS	TOT CLMS	IND CLMS
10/854,680	05/25/2004	2818	770	B-4713 620053-5	6	20	3

CONFIRMATION NO. 6637

CORRECTED FILING RECEIPT

OC000000013653896

Richard P. Berg, ESQ.
c/o LADAS & PARRY
Suite 2100
5670 Wilshire Boulevard
Los Angeles, CA 90036-5679

Date Mailed: 08/26/2004

Receipt is acknowledged of this regular Patent Application. It will be considered in its order and you will be notified as to the results of the examination. Be sure to provide the U.S. APPLICATION NUMBER, FILING DATE, NAME OF APPLICANT, and TITLE OF INVENTION when inquiring about this application. Fees transmitted by check or draft are subject to collection. Please verify the accuracy of the data presented on this receipt. **If an error is noted on this Filing Receipt, please write to the Office of Initial Patent Examination's Filing Receipt Corrections, facsimile number 703-746-9195. Please provide a copy of this Filing Receipt with the changes noted thereon. If you received a "Notice to File Missing Parts" for this application, please submit any corrections to this Filing Receipt with your reply to the Notice. When the USPTO processes the reply to the Notice, the USPTO will generate another Filing Receipt incorporating the requested corrections (if appropriate).**

Applicant(s)

Stephen Thomas III, Redondo Beach, CA;
Yakov Royter, Santa Monica, CA;

Assignment For Published Patent Application

HRL Laboratories, LLC;

Domestic Priority data as claimed by applicant

Foreign Applications

If Required, Foreign Filing License Granted: 07/24/2004

Projected Publication Date: Request for Non-Publication Acknowledged

Non-Publication Request: Yes

Early Publication Request: No

Title

Semiconductor device having a self-aligned base contact and narrow emitter

Preliminary Class
257

LICENSE FOR FOREIGN FILING UNDER
Title 35, United States Code, Section 184
Title 37, Code of Federal Regulations, 5.11 & 5.15

GRANTED

The applicant has been granted a license under 35 U.S.C. 184, if the phrase "IF REQUIRED, FOREIGN FILING LICENSE GRANTED" followed by a date appears on this form. Such licenses are issued in all applications where the conditions for issuance of a license have been met, regardless of whether or not a license may be required as set forth in 37 CFR 5.15. The scope and limitations of this license are set forth in 37 CFR 5.15(a) unless an earlier license has been issued under 37 CFR 5.15(b). The license is subject to revocation upon written notification. The date indicated is the effective date of the license, unless an earlier license of similar scope has been granted under 37 CFR 5.13 or 5.14.

This license is to be retained by the licensee and may be used at any time on or after the effective date thereof unless it is revoked. This license is automatically transferred to any related applications(s) filed under 37 CFR 1.53(d). This license is not retroactive.

The grant of a license does not in any way lessen the responsibility of a licensee for the security of the subject matter as imposed by any Government contract or the provisions of existing laws relating to espionage and the national security or the export of technical data. Licensees should apprise themselves of current regulations especially with respect to certain countries, of other agencies, particularly the Office of Defense Trade Controls, Department of State (with respect to Arms, Munitions and Implements of War (22 CFR 121-128)); the Office of Export Administration, Department of Commerce (15 CFR 370.10 (j)); the Office of Foreign Assets Control, Department of Treasury (31 CFR Parts 500+) and the Department of Energy.

NOT GRANTED

No license under 35 U.S.C. 184 has been granted at this time, if the phrase "IF REQUIRED, FOREIGN FILING LICENSE GRANTED" DOES NOT appear on this form. Applicant may still petition for a license under 37 CFR 5.12, if a license is desired before the expiration of 6 months from the filing date of the application. If 6 months has lapsed from the filing date of this application and the licensee has not received any indication of a secrecy order under 35 U.S.C. 181, the licensee may foreign file the application pursuant to 37 CFR 5.15(b).

SPE RESPONSE FOR CERTIFICATE OF CORRECTION

Paper No.:20060619

DATE : June 19, 2006

TO SPE OF : ART UNIT 2827

SUBJECT : Request for Certificate of Correction on Patent No.: 7,042,775

A response is requested with respect to the accompanying request for a certificate of correction.

Please complete this form and return with file, within **7** days to:
Certificates of Correction Branch - PK 3-910
Palm location **7590** - Tel. No. 305-8201

With respect to the change(s) requested, correcting Office and/or Applicant's errors, should the patent read as shown in the certificate of correction? No new matter should be introduced, nor should the scope or meaning of the claims be changed.

Thank You For Your Assistance **Certificates of Correction Branch**

The request for issuing the above-identified correction(s) is hereby:
Note your decision on the appropriate box.

☒ **Approved** **All** changes apply.

☐ **Approved in Part** Specify below which changes **do not** apply.

☐ **Denied** State the reasons for denial below.

Comments:

AMIR ZARABIAN
SUPERVISORY PATENT EXAMINER
TECHNOLOGY CENTER 2800

SPE: Amir Zarabian **Art Unit** 2827

UNITED STATES PATENT AND TRADEMARK OFFICE

Commissioner for Patents
United States Patent and Trademark Office
P.O. Box 1450
Alexandria, VA 22313-1450
www.uspto.gov

MCDONNELL BOEHNEN HULBERT & BERGHOFF LLP
300 S. WACKER DRIVE
32ND FLOOR
CHICAGO IL 60606

COPY MAILED

MAR 0 5 2009

OFFICE OF PETITIONS

In re Application of	:	DECISION ON
Wang et al.	:	PETITION
Application No.: 10/854687	:	
Filing or 371(c) Date: 05/26/2004	:	
Attorney Docket Number: 08-1294	:	

This is a decision in response to the Petition to Withdraw Holding of Abandonment Under 37 C.F.R. § 1.181, filed January 29, 2009.

This Petition is hereby **granted**.

Background

The above-identified application became abandoned for failure to timely and properly reply to the final office action mailed April 29, 2008. The final office action indicated that no claims were allowed. Extensions of time under 37 CFR 1.136(a) were available.

Applicant filed a Notice of Appeal on October 29, 2008, along with an authorization to charge any additional fees to Applicant's deposit account. This Office charged Applicant the fee for the filing of the Notice of Appeal; however, Office records do not indicate that the requisite extension of time fee was charged to Applicant's deposit account.

No complete and proper reply having been received, the application became abandoned on July 30, 2008. A Notice of Abandonment was mailed April 14, 2009.

The present petition

Applicant files the present petition and asserts that the Notice of Appeal and fee authorization was a complete and proper reply to the Office action. In support of this assertion, Applicant files a copy of the reply[1].

[1] Applicant also files a copy of an EFS Acknowledgment Receipt acknowledging receipt of, inter alia, a Power of Attorney, and a Statement Establishing Ownership under 37 CFR 3.73(b) on December 11, 2008. This Acknowledgment Receipt fails to support the filing of the Notice of Appeal and fees on October 29, 2008.

A review of Office records reveals that the Office received a Notice of Appeal on October 29, 2008. A review of the Notice of Appeal reveals that it includes an authorization to charge any additional fees to Applicant's deposit account.

In view of the above, the holding of abandonment for failure to timely and properly reply to the final Office action is hereby withdrawn.

The fee for a three (3) month extension of time has been charged to deposit account 13-2490 as authorized in the Notice of Appeal.

Applicant has filed a Request for Continued Examination[2] ("RCE") and submission with the present petition.

The application is being referred to Technology Center Art Unit 2416 for processing of the RCE and submission, and for continued examination in the normal course of business.

Telephone inquiries concerning this matter should be directed to the undersigned at (571) 272-3232.

/Derek L. Woods/
Derek L. Woods
Attorney
Office of Petitions

[2] The filing of the RCE withdraws the application from appeal and re-opens prosecution. See, MPEP 701 and 1215.

UNITED STATES PATENT AND TRADEMARK OFFICE

Commissioner for Patents
United States Patent and Trademark Office
P.O. Box 1450
Alexandria, VA 22313-1450
www.uspto.gov

KENYON & KENYON
1500 K STREET, N.W., SUITE 700
WASHINGTON, DC 20005

COPY MAILED

MAR 2 4 2005

OFFICE OF PETITIONS

In re Application of
Thompson, Wang, and Lu
Application No.: 10/854,699
Filed: May 27, 2004
Attorney Docket No: 10799/122
For: **DNA ENCODING A PLANT DEOXYHYPUSINE SYNTHASE, A PLANT EUKARYOTIC INITIATION FACTOR 5A, TRANSGENIC PLANTS AND A METHOD FOR CONTROLLING SENESCENCE PROGRAMMED AND CELL DEATH IN PLANTS**

: DECISION ACCORDING
: RULE 47(a) STATUS

This is in response to the petition under 37 CFR 1.47(a), filed January 18, 2005.

The petition is **GRANTED**.

The above-identified application and papers have been reviewed and found in compliance with 37 CFR 1.47(a). This application is hereby accorded Rule 1.47(a) status.

The above-cited application was filed on May 27, 2004, without a properly executed declaration. On August 17, 2004, the Office of Initial Patent Examination mailed a Notice to File Missing Parts of Nonprovisional Application requiring an executed declaration and a surcharge for the late filing of oath or declaration. The notice also required information relative to the sequence listing. The instant petition was filed on January 18, 2005, with a request for an extension of time within the third month.

Petitioner has shown that inventor Lu has expressly refused to join the prosecution of the above-identified application. The above-identified application and papers have been reviewed and found in compliance with 37 CFR 1.47(a). This application is hereby accorded Rule 1.47(a) status.

As provided in Rule 1.47(c), this Office will forward notice of this application's filing to the non-signing inventor at the addresses given in the petition. Notice of the filing of this application will also be published in the Official Gazette.

Deposit account 11-0600 will be charged an additional $285.00 for the extension of time within the fourth month that is necessary in order for the instant petition to be considered timely filed..

This application will be forwarded to the Office of Initial Patent Examination for further processing.

Telephone inquiries should be directed to the undersigned at (571) 272-3222.

Kenya A. McLaughlin
Petitions Attorney
Office of Petitions

UNITED STATES PATENT AND TRADEMARK OFFICE

Commissioner for Patents
United States Patent and Trademark Office
P.O. Box 1450
Alexandria, VA 22313-1450
www.uspto.gov

COPY MAILED

MAR 2 4 2005

OFFICE OF PETITIONS

Dongen Lily Lu
114 Harmony Road
Mickleton, NJ 08056

In re Application of :
Thompson, Wang, and Lu :
Application No.: 10/854,699 : LETTER
Filed: May 27, 2004 :
Attorney Docket No: 10799/122 :
For: **DNA ENCODING A PLANT DEOXYHYPUSINE SYNTHASE, A PLANT EUKARYOTIC INITIATION FACTOR 5A, TRANSGENIC PLANTS AND A METHOD FOR CONTROLLING SENESCENCE PROGRAMMED AND CELL DEATH IN PLANTS**

Dear Mr. Odlivak:

You are named as a joint inventor in the above-identified United States patent application filed under the provisions of 35 U.S.C. 116 (United States Code) and 37 CFR 1.47(a), Rules of Practice in Patent Cases. Should a patent be granted on the application you will be designated therein as a joint inventor.

As a joint inventor, you are entitled to inspect any paper in the file wrapper of the application, order copies of all or any part thereof (at a prepaid cost per 37 CFR 1.19) or make your position of record in the application. Alternatively, you may arrange to do any of the preceding through a registered patent attorney or agent presenting written authorization from you. If you care to join the application, counsel of record (see below) would presumably assist you. Joining in the application would entail the filing of an appropriate oath or declaration by you pursuant to 37 CFR 1.63.

Telephone inquiries regarding this communication should be directed to Petitions Attorney Kenya A. McLaughlin at (571) 272-3222. Requests for information regarding your application should be directed to the File Information Unit at (703) 308-2733. Information regarding how to pay for and order a copy of the application, or a specific paper in the application, should be directed to Certification Division at (703) 308-9726 or 1-800-972-6382 (outside the Washington D.C. area).

Kenya A. McLaughlin
Petitions Attorney
Office of Petitions

KENYON & KENYON
1500 K STREET, N.W., SUITE 700
WASHINGTON DC 20005

UNITED STATES PATENT AND TRADEMARK OFFICE

COMMISSIONER FOR PATENTS
UNITED STATES PATENT AND TRADEMARK OFFICE
P.O. BOX 1450
ALEXANDRIA, VA 22313-1450
www.uspto.gov

JERRY I. YADEGAR
P.O. BOX 251886
LOS ANGELES, CA 90025-1886

COPY MAILED

DEC 2 0 2005

OFFICE OF PETITIONS

In re Application of :
Jerry I. Yadegar :
Application No. 10/854,724 :
Filed: May 25, 2004 :
Attorney Docket No. None :

DECISION DISMISSING PETITION

This is a decision on the petition filed under 37 CFR 1.10(c) on August 12, 2005, requesting that the above-identified application be accorded a filing date of May 26, 2004, instead of the presently accorded date of May 25, 2004

Petitioner requests the later filing date on the basis that the application was purportedly deposited with the U. S. Postal Service (USPS) as Express Mail on May 26, 2004. While petitioner directs the Office to "see" Express Mail label ER449595527US, no Express Mail label was found. In fact, petitioner included a copy of his post card receipt for the application, which bears Express Mail label number ER449595527US. It is noted that the same Express Mail label number is found on the Application Transmittal Letter found in the file.

Paragraph (c) of 37 CFR 1.10 states that:

> Any person filing correspondence under this section that was received by the Office and delivered by the "Express Mail Post Office to Addressee" service of the USPS, who can show that there is a discrepancy between the filing date accorded by the Office to the correspondence and the date of deposit as shown by the "date-in" on the "Express Mail" mailing label or other official USPS notation, may petition the Commissioner to accord the correspondence a filing date as of the "date-in" on the "Express Mail" mailing label or other official USPS notation provided that:
>
> (1) The petition is filed promptly after the person becomes aware that the Office has accorded, or will accord, a filing date other than the USPS deposit date;
>
> (2) The number of the "Express Mail" mailing label was placed on the paper(s) or fee(s) that constitute the correspondence prior to the original mailing by "Express Mail"; and
>
> (3) The petition includes a true copy of the "Express Mail" mailing label showing the "date-in" and of any other official notation by the USPS relied upon to show the date of deposit.

The present petition fails to include the evidence required by 37 CFR 1.10(c). Accordingly, the petition is **DISMISSED**.

Any request for reconsideration of this decision should be filed within **TWO MONTHS** of the date of this decision in order to be considered timely (see 37 CFR 1.181(f)) and should be addressed as follows:

By mail: Mail Stop PETITION
Commissioner for Patents
Post Office Box 1450
Alexandria, VA 22313-1450

By hand: U.S. Patent and Trademark Office
Customer Service Window, Mail Stop PETITION
Randolph Building
401 Dulany Street
Alexandria, VA 22314

The centralized facsimile number is **(571) 273-8300**.

Any questions concerning this matter may be directed to the undersigned at (571) 272-3204.

Sherry D. Brinkley
Petitions Examiner
Office of Petitions
Office of the Deputy Commissioner
for Patent Examination Policy

UNITED STATES PATENT AND TRADEMARK OFFICE

COMMISSIONER FOR PATENTS
UNITED STATES PATENT AND TRADEMARK OFFICE
P.O. BOX 1450
ALEXANDRIA, VA 22313-1450
www.uspto.gov

JERRY I. YADEGAR
P.O. BOX 251886-90025
LOS ANGELES, CA 90025

COPY MAILED
SEP 27 2007
OFFICE OF PETITIONS

In re Application of
Jerry Iraj Yadegar
Application No. 10/854,724
Filed: May 25, 2004
Attorney Docket No. None

ON PETITION

This is a decision on the petition under 37 CFR 1.137(b), filed May 22, 2007, to revive the above-identified application.

The petition is **GRANTED**.

The application became abandoned for failure to timely file a reply within the meaning of 37 CFR 1.113 to an Office action mailed September 14, 2006. A Notice of Abandonment was mailed on May 7, 2007. On May 22, 2007, the present petition was filed.

The petition is not signed by a registered patent attorney or patent agent of record. However, in accordance with 37 CFR 1.34, the signature of Mr. Michael N. Cohen appearing on the correspondence shall constitute a representation to the United States Patent and Trademark Office that he is authorized to represent the particular party on whose behalf he acts. If, Mr. Cohen desires to receive correspondence regarding this file, the appropriate power of attorney documents must be submitted. A courtesy copy of this decision is being mailed to Mr. Cohen, the petitioner herein. However, until otherwise instructed, all future correspondence regarding this application file will be directed solely to the above-noted correspondence address of record.

The proposed reply required for consideration of a petition to revive must be a Notice of Appeal (and appeal fee required by 37 CFR 41.20(b)(2), an amendment that *prima facie* places the application in condition for allowance, a Request for Continued Examination and submission (37 CFR 1.114), or the filing of a continuing application under 37 CFR 1.53(b). See MPEP 711.03(c)(II)(A)(2).

The petition satisfies the requirements of 37 CFR 1.137(b) in that petitioner has supplied (1) the reply in the form of a Request for Continued Examination (RCE), including the fee of $395 and the submission required by 37 CFR 1.114; (2) the petition fee of $750; and (3) an adequate statement of unintentional delay[1].

[1] 37 CFR 1.137(b)(3) requires a statement that the entire delay in filing the required reply from the due date for the reply until the filing of a grantable petition pursuant to 37 CFR 1.137(b) was unintentional. While the statement is not made by an attorney of record, such statement is being treated as having been made as the result of a reasonable inquiry into the facts and circumstances of such delay. See 37 CFR 10.18(b) and Changes to Patent Practice and Procedure; Final Rule Notice, 62 Fed. Reg. 53131, 53178 (October 10, 1997), 1203 Off. Gaz. Pat. Office 63, 103 (October 21, 1997). In the event that such an inquiry has not been made, petitioner must make such an inquiry. If such inquiry results in the discovery that it is not correct that the entire delay in filing the required reply from the due date for the reply until the filing of a grantable petition pursuant to 37 CFR 1.137(b) was unintentional, petitioner must notify the Office.

This application is being referred to Technology Center AU 3748 for processing of the RCE and for appropriate action by the Examiner in the normal course of business on the amendment submitted in accordance with 37 CFR 1.114.

Telephone inquiries concerning this decision should be directed to the undersigned at (571) 272-3204. Inquiries relating to further prosecution should be directed to the Technology Center.

Sherry D. Brinkley
Petitions Examiner
Office of Petitions

cc: MICHAEL N. COHEN
9025 WILSHIRE BLVD., SUITE 301
BEVERLY HILLS, CA 90211

UNITED STATES PATENT AND TRADEMARK OFFICE

Commissioner for Patents
United States Patent and Trademark Office
P.O. Box 1450
Alexandria, VA 22313-1450
www.uspto.gov

COPY MAILED

AUG 05 2009

OFFICE OF PETITIONS

JERRY I. YADEGAR
P.O. BOX 251886-90025
LOS ANGELES, CA 90025

In re Application of Jerry I. Yadegar Application No. 10/854,724 Filed: May 25, 2004 Attorney Docket No:. None	: : : : :	DECISION DISMISSING PETITION

This is a decision on the renewed petition, filed March 20, 2009, requesting that the above-identified application be accorded a filing date of May 26, 2004, instead of the presently accorded date of May 25, 2004 under the provisions of 37 CFR 1.10(c).

The petition is **DISMISSED**.

Paragraph (c) of 37 CFR 1.10 states that:

> Any person filing correspondence under this section that was received by the Office and delivered by the "Express Mail Post Office to Addressee" service of the USPS, who can show that there is a discrepancy between the filing date accorded by the Office to the correspondence and the date of deposit as shown by the "date-in" on the "Express Mail" mailing label or other official USPS notation, may petition the Commissioner to accord the correspondence a filing date as of the "date-in" on the "Express Mail" mailing label or other official USPS notation provided that:
>
> (1) The petition is filed promptly after the person becomes aware that the Office has accorded, or will accord, a filing date other than the USPS deposit date;
>
> (2) The number of the "Express Mail" mailing label was placed on the paper(s) or fee(s) that constitute the correspondence prior to the original mailing by "Express Mail"; and
>
> (3) The petition includes a true copy of the "Express Mail" mailing label showing the "date-in" and of any other official notation by the USPS relied upon to show the date of deposit.

The renewed petition lacks the showing required by item (1) above.

A review of the record shows that a petition under the provisions of 37 CFR 1.10(c) was filed on August 12, 2005. The petition was dismissed in a decision mailed December 20, 2005, because the petition failed to included the evidence required by 37 CFR 1.10(c). The decision mailed December 20, 2005 was made without prejudice to reconsideration within TWO MONTHS of the mailing date of the decision; however, no further reconsideration of this matter was requested until the filing of the present petition on March 20, 2009.

Further, it is noted that a Notice of Allowance was mailed on August 8, 2008 and the issue fee was timely paid on October 1, 2008. On October 29, 2008 an Issue Notification was mailed and the application subsequently issued as U.S. Patent No. 7,451,738 on November 18, 2008. Any petition to accord Application No. 10/854,724 a filing date of May 26, 2004 should have been filed prior to the payment of the issue fee. Instead, applicant paid the issue fee on October 1, 2008, and allowed the application to issue with the May 25, 2004 filing date. By paying the issue fee, applicant acquiesced to the May 25, 2004 filing date accorded the application.

Further, assuming, arguendo, that the instant application had not yet issued, the petition would still be untimely because it was filed over three years after the initial petition under 37 CFR 1.10(c) filed August 12, 2005.

The showing of record points to a lack of diligence on the part of petitioner, and, in light of the extended delay, this petition is clearly untimely and subject to dismissal.

35 U.S.C. Chapters 25 and 30 provides for the amendment and correction of patents. In the absence of legislative intent to the contrary, when a statute expressly provides a specific remedy for a situation, the statute is deemed to exclude other remedies for such situations.[1] Therefore, any amendment or correction of the filing date of the application for the above-identified patent must be authorized by the provisions of 35 U.S.C. chapters 25 or 30.

35 U.S.C. Chapter 25 provides for the amendment and correction of a patent by: (1) reissue (35 U.S.C. §§ 251 and 252); (2) disclaimer (35 U.S.C. § 253); (3) certificate of correction (35 U.S.C. §§ 254 and 255); or (4) correction of named inventor (35 U.S.C. § 256). 35 U.S.C. chapter 30 provides for the amendment of a patent as a result of a reexamination proceeding (35 U.S.C. §§ 302 through 307).

---

[1] See National R.R. Passenger Corp. v. National Ass'n of R.R. Passengers, 414 U.S. 453, 458 (1974) (expressio unius est exclusion alterius (the mention of one thing implies exclusion of another thing) is a standard principle of statutory construction); see also Botany Worsted Mills v. United States, 278 U.S. 282, 289 (1929) ("when a statute limits a thing to be done in a particular mode, it includes the negative of any other mode").

The requested change to the filing date of the application for the above-identified patent does not involve disclaimer (35 U.S.C. § 253), correction of a named inventor (35 U.S.C. § 256), or an amendment (in reexamination) to distinguish the invention from the prior art or in response to a decision adverse to patentability (35 U.S.C. § 305). In addition, the requested change to the filing date of the application for the above-identified patent does not concern a mistake "clearly disclosed by the records of the [PTO]" (since petitioner did not presented an "Express Mail" label showing a "date-in" inconsistent with the filing date accorded the application for the above-identified patent until after issuance of the application into a patent).[2]

Since the office is restricted by statute to act on paper to change a filing date after the application has issued as a patent, the petition cannot be granted.

Any request for reconsideration of this decision should be filed within **TWO MONTHS** of the date of this decision in order to be considered timely (see 37 CFR 1.181(f)) and should be delivered through one of the following mediums:

By mail: Mail Stop PETITIONS
Commissioner for Patents
Post Office Box 1450
Alexandria, VA 22313-1450

By hand: Customer Service Window
Mail Stop Petitions
Randolph Building
401 Dulany Street
Alexandria, VA 22314

By fax: (571) 273-8300
ATTN: Office of Petitions

By Internet: EFS-Web[3]

The file does not indicate a change of address has been submitted, although the address given on the petition differs from the address of record. If appropriate, a change of address should be filed in

---

[2] See 35 U.S.C. § 254.

[3] www.uspto.gov/ebc/efs_help.html (for help using EFS-Web call the Patent Electronic Business Center at (866) 217-9197)

accordance with MPEP 601.03. A courtesy copy of this decision is being mailed to the address given on the petition; however, the Office will mail all future correspondence solely to the address of record.

Any questions concerning this matter may be directed to the undersigned at (571) 272-3204.

Sherry D. Brinkley
Petitions Examiner
Office of Petitions

cc: JERRY I. YADEGAR
P.O. BOX 251886
LOS ANGELES, CA 90025-1886

UNITED STATES PATENT AND TRADEMARK OFFICE

Technology Center 1700

Mailed: 8/15/05

MEB
Paper Number:

In re application of
John Chu Chen
Serial No. 10/854,725
Filed: May 26, 2004
For: Bi-Modal Ionomers

DECISION ON PETITION

This is a response to the PETITION TO WITHDRAW ABANDONMENT, filed July 18, 2005. The petition requests that the abandonment, as set forth in the Notice of Abandonment of May 16, 2005, for failure to timely reply to the Notice of Allowance and Fees Due of January 7, 2005 be withdrawn. The petitioner asserts that the Form Transmitting the Issue and Publication Fee (including the Certificate of Mailing) was timely filed on April 6, 2005, with the appropriate fees.

DECISION

The instant request is accepted as a timely petition under 37 C.F.R. 1.181 (no fee), and is evaluated under the procedures regarding a Petition To Withdraw Holding of Abandonment Based on Evidence That a Reply Was Timely Mailed or Filed.

As set forth in MPEP 711.03(c) Petition To Withdraw Holding of Abandonment Based on Evidence That a Reply Was Timely Mailed or Filed:
37 CFR 1.10(c) through 1.10(e) set forth procedures for petitioning the Director of the USPTO to accord a filing date to correspondence as of the date of deposit of the correspondence as "Express Mail." A petition to withdraw the holding of abandonment relying upon a timely reply placed in "Express Mail" must include an appropriate petition under 37 CFR 1.10(c), (d), or (e) (see MPEP § 513). When a paper is shown to have been mailed to the Office using the "Express Mail" procedures, the paper must be entered in PALM with the "Express Mail" date. Similarly, applicants may establish that a reply was filed with a postcard receipt that properly identifies the reply and provides prima facie evidence that the reply was timely filed. See MPEP § 503. For example, if the application has been held

abandoned for failure to file a reply to a first Office action, and applicant has a postcard receipt showing that an amendment was timely filed in response to the Office action, then the holding of abandonment should be withdrawn upon the filing of a petition to withdraw the holding of abandonment. When the reply is shown to have been timely filed based on a postcard receipt, the reply must be entered into PALM using the date of receipt of the reply as shown on the post card receipt. Where a certificate of mailing or transmission under 37 CFR 1.8, but not a postcard receipt, is relied upon in a petition to withdraw the holding of abandonment, see 37 CFR 1.8(b) and MPEP § 512. As stated in 37 CFR 1.8(b)(3) the statement that attests to the previous timely mailing or transmission of the correspondence must be on a personal knowledge basis, or to the satisfaction of the Director of the USPTO. If the statement attesting to the previous timely mailing is not made by the person who signed the Certificate of Mailing (i.e., there is no personal knowledge basis), then the statement attesting to the previous timely mailing should include evidence that supports the conclusion that the correspondence was actually mailed (e.g., copies of a mailing log establishing that correspondence was mailed for that application). When the correspondence is shown to have been timely filed based on a certificate of mailing, the correspondence is entered into PALM with the actual date of receipt (i.e., the date that the duplicate copy of the papers was filed with the statement under 37 CFR 1.8).

The petitioner's showing that the Form Transmitting the Issue and Publication Fee (including the Certificate of Mailing), filed on April 6, 2005, with the appropriate fees, is sufficient. Therefore, the Notice of Abandonment of May 16, 2005 is withdrawn, and the application will be forwarded to for processing of the issue fee filed April 6, 2005, as evidenced by the Certificate of Mailing, and a copy of which is provided as an attachment to the instant petition.

The Petition is **Granted**.

UNITED STATES PATENT AND TRADEMARK OFFICE

Technology Center 1700

Jacqueline M. Stone

Jacqueline Stone, Director
Technology Center 1700
Chemical and Materials Engineering

Craig H. Evans
E.I. Du Pont De Nemours and Company
Legal Patent Records Center
Barley Mill Plaza 25/1128
4417 Lancaster Pike
Wilmington, DE 19805

UNITED STATES PATENT AND TRADEMARK OFFICE

COMMISSIONER FOR PATENTS
UNITED STATES PATENT AND TRADEMARK OFFICE
P.O. BOX 1450
ALEXANDRIA, VA 22313-1450
www.uspto.gov

FISH & RICHARDSON P.C.
P.O. BOX 1022
MINNEAPOLIS, MN 55440-1022

COPY MAILED

OCT 04 2007

OFFICE OF PETITIONS

In re Application of :
Shunpei Yamazaki, et al. :
Application No.: 10/854,730 :
Filed: May 27, 2004 :
Attorney Docket No.: 07977-287002 :

ON PETITION

This is a decision on the petition, filed October 1, 2007, under 37 CFR 1.313(c)(2) to withdraw the above-identified application from issue after payment of the issue fee.

The petition is **GRANTED**.

The above-identified application is withdrawn from issue for consideration of a submission under 37 CFR 1.114 (request for continued examination). See 37 CFR 1.313(c)(2).

Petitioner is advised that the issue fee paid on August 28, 2007, in the above-identified application, cannot be refunded. If, however, the above-identified application is again allowed, petitioner may request that it be applied towards the issue fee required by the new Notice of Allowance. [1]

Telephone inquiries relating to this decision should be directed to the undersigned at (571) 272-3204.

The application is being referred to Technology Center AU 2818 for further processing of the request for continued examination under 37 CFR 1.114 and for consideration of the concurrently filed Information Disclosure Statement (IDS).

Sherry D. Brinkley
Petitions Examiner
Office of Petitions

[1] *The request to apply the issue fee to the new Notice may be satisfied by completing and returning the new Part B – Fee(s) Transmittal Form (along with any balance due at the time of submission). Petitioner is advised that the Issue Fee Transmittal Form must be completed and timely submitted to avoid abandonment of the application.*

UNITED STATES PATENT AND TRADEMARK OFFICE

Commissioner for Patents
United States Patent and Trademark Office
P.O. Box 1450
Alexandria, VA 22313-1450
www.uspto.gov

BIRCH STEWART KOLASCH & BIRCH
PO BOX 747
FALLS CHURCH VA 22040-0747

COPY MAILED

OCT 1 9 2005

OFFICE OF PETITIONS

In re Application of :
Vonda Strong :
Application No. 10/854,764 :
Filed: May 26, 2004 :
Attorney Docket No. VSTRNG.007A :

DECISION ON PETITION

This is a decision on the petition under 37 CFR 1.137 (b) and (f), filed September 9, 2005, which is being treated as a petition under 37 CFR 1.137(b) to revive the present nonprovisional application for failure to timely notify the U.S. Patent and Trademark (USPTO) of the filing of an application in a foreign country, or under a multinational treaty that requires publication of applications eighteen months after filing. *See* 37 CFR 1.137(f).

The petition is **GRANTED**.

Petitioner states that the present nonprovisional application is the subject of an application filed in an eighteen-month publication country on May 26, 2005. However, the USPTO was unintentionally not notified of this filing within forty-five days subsequent to the filing of the subject application in an eighteen-month publication country. Accordingly, this application became abandoned pursuant to 35 U.S.C. 122(b)(2)(B)(iii) and 37 CFR 1.213(c) for failure to timely notify the Office of the filing of an application in a foreign country or under a multilateral international agreement that requires publication of applications eighteen months after filing.

A petition to revive an application abandoned pursuant to 35 U.S.C. 122(b)(2)(B)(iii) for failure to notify the USPTO of a foreign filing must be accompanied by:

(1) the required reply, which is met by the notification of such filing in a foreign country or under a multinational treaty;

(2) the petition fee as set forth in 37 CFR 1.17(m); and

(3) a statement that the entire delay in filing the required reply from the due date of the reply until the filing of a grantable petition was unintentional.

The present petition has been found to be in compliance with 37 CFR 1.137(b). Accordingly, the failure to timely notify the USPTO of a foreign or international filing within forty-five days after the

date of filing of such foreign or international application as provided by 35 U.S.C. 122(b)(2)(B)(iii) and 37 CFR 1.213(c) is accepted as having been unintentionally delayed.

The previous Request and Certification under 35 U.S.C. 122(b)(2)(B)(i) has been rescinded. A corrected filing receipt, which sets forth the projected publication date of November 24, 2005, accompanies this decision on petition.

This matter is being referred to the Office of Patent Publications.

Any inquiries concerning this decision may be directed to the undersigned at (571) 272-3211.

Christina Tartera Donnell

Christina Tartera Donnell
Senior Petitions Attorney
Office of Petitions

Enclosure: Corrected Filing Receipt

UNITED STATES PATENT AND TRADEMARK OFFICE

UNITED STATES DEPARTMENT OF COMMERCE
United States Patent and Trademark Office
Address: COMMISSIONER FOR PATENTS
P.O. Box 1450
Alexandria, Virginia 22313-1450
www.uspto.gov

SCHWEGMAN, LUNDBERG & WOESSNER/MICRON
P.O. BOX 2938
MINNEAPOLIS, MN 55402

Mail Date: 05/04/2010

Applicant	: Philip Neaves	: DECISION ON REQUEST FOR
Patent Number	: 7612816	: RECALCULATION of PATENT
Issue Date	: 11/03/2009	: TERM ADJUSTMENT IN VIEW
Application No	: 10/854,775	: OF WYETH AND NOTICE OF INTENT TO
Filed	: 05/26/2004	: ISSUE CERTIFICATE OF CORRECTION
		:

The Request for Recalculation is **GRANTED** to the extent indicated.

The patent term adjustment has been determined to be **1561** days. The USPTO will *sua sponte* issue a certificate of correction reflecting the amount of PTA days determined by the recalculation.

Prior to the issuance of the certificate of correction, the USPTO will afford patentee an opportunity to be heard and request reconsideration. Accordingly, patentee has **one month or thirty (30) days**, whichever is longer, to file a request for reconsideration of this patent term adjustment calculation. See 35 U.S.C. 154(b)(3)(B)(ii) and 37 CFR 1.322(a)(4). No extensions of time will be granted under 37 CFR 1.136.

Patentee should use document code PET.OP if electronically filing a request for reconsideration of this patent term adjustment calculation. The patentee must also include the information required by 37 CFR 1.705(b)(2) and the fee required by 37 CFR 1.18(e). If patentee does not file a timely request for reconsideration of this patent term adjustment calculation including the information required by 37 CFR 1.705(b)(2) and the fee required by 37 CFR 1.18(e), the USPTO will issue a certificate of correction reflecting the PTA determination noted above.

Patentee should be aware that in order to preserve the right to review in the United States District Court for the District of Columbia of the USPTO patent term adjustment determination, patentee must ensure that he or she also take the steps required under 35 U.S.C. 154(b)(4)(A) in a timely manner. Nothing in the request for recalculation should be construed as providing an alternative time frame for commencing a civil action under 35 U.S.C. 154(b)(4)(A).

Any questions concerning this decision should be directed to the Office of Patent Legal Administration at 571-272-7702.

UNITED STATES PATENT AND TRADEMARK OFFICE

Commissioner for Patents
United States Patent and Trademark Office
P.O. Box 1450
Alexandria, VA 22313-1450
www.uspto.gov

SUGHRUE MION, PLLC
2100 PENNSYLVANIA AVENUE, N.W.
WASHINGTON DC 20037

COPY MAILED

JAN 17 2008

OFFICE OF PETITIONS

In re Application of	:	
Tsuyoshi Yamanaka et al	:	
Application No. 10/854,804	:	DECISION GRANTING PETITION
Filed: May 27, 2004	:	UNDER 37 CFR 1.313(c)(2)
Attorney Docket No. Q81553	:	

This is a decision on the petition under 37 CFR 1.313(c)(2), filed January 16, 2008, to withdraw the above-identified application from issue after payment of the issue fee.

The petition is **GRANTED**.

The above-identified application is withdrawn from issue for consideration of a submission under 37 CFR 1.114 (request for continued examination). *See* 37 CFR 1.313(c)(2).

Petitioner is advised that the issue fee paid on December 20, 2007 cannot be refunded. If, however, this application is again allowed, petitioner may request that it be applied towards the issue fee required by the new Notice of Allowance.[1]

Telephone inquiries should be directed to the undersigned at (571) 272-3208.

This application is being referred to Technology Center AU 3653 for processing of the request for continued examination under 37 CFR 1.114 and for consideration of the concurrently filed amendment.

Karen Creasy

Karen Creasy
Petitions Examiner
Office of Petitions

---

[1] *The request to apply the issue fee to the new Notice may be satisfied by completing and returning the new Part B – Fee(s) Transmittal Form (along with any balance due at the time of submission). Petitioner is advised that the Issue Fee Transmittal Form* ***must*** *be completed and timely submitted to avoid abandonment of the application.*

UNITED STATES PATENT AND TRADEMARK OFFICE

Commissioner for Patents
United States Patent and Trademark Office
P.O. Box 1450
Alexandria, VA 22313-1450
www.uspto.gov

MORGAN & FINNEGAN, L.L.P.
3 WORLD FINANCIAL CENTER
NEW YORK NY 10281-2101

COPY MAILED

JUL 18 2007

OFFICE OF PETITIONS

ON PETITION

In re Application of
Bruce C. Comolli et al.
Application No. 10/854,820
Filed: May 27, 2004
Attorney Docket No. 0048G-1407-1

This is a decision on the petition under 37 CFR 1.137(b)[1], filed February 8, 2007, to revive the above-identified application.

The petition is **GRANTED**.

This application became abandoned for failure to timely pay the issue fee in response to the Notice of Allowance mailed August 30, 2006 which set a three month statutory period for response. In lieu of payment of the issue fee, and with the instant petition, a Request for Continued Examination (RCE) with an Information Disclosure Statement (IDS) as the submission required under 37 CFR 1.114 was filed.

The Office notes that payment of the issue fee is the required reply in order to revive the application for failure to submit a timely response to the Notice of Allowance, not an RCE and IDS.

However, in view of the general authorization included with the RCE, and in view of the petition to revive, the office has charged the issue fee and publication fee to petitioner's deposit account no. 13-4500.

---

[1] Effective December 1, 1997, the provisions of 37 CFR 1.137(b) now provide that where the delay in reply was unintentional, a petition may be filed to revive an abandoned application or a lapsed patent pursuant to 37 CFR 1.137(b). A grantable petition filed under the provisions of 37 CFR 1.137(b) must be accompanied by:

(1) the required reply, unless previously filed. In a nonprovisional application abandoned for failure to prosecute, the required reply may be met by the filing of a continuing application. In an application or patent, abandoned or lapsed for failure to pay the issue fee or any portion thereof, the required reply must be the payment of the issue fee or any outstanding balance thereof.

(2) the petition fee as set forth in 37 CFR 1.17(m);

(3) a statement that the entire delay in filing the required reply from the due date for the reply until the filing of a grantable petition pursuant to 37 CFR 1.137(b) was unintentional. The Commissioner may required additional information where there is a question whether the delay was unintentional; and

(4) any terminal disclaimer (and fee as set forth in 37 CFR 1.20(d)) required pursuant to 37 CFR 1.137(c)).

Petitioner is advised that the issue fee paid in the present application cannot be refunded. However, if the application is allowed again, petitioner may request that the $1,400.00 be applied towards the issue fee required by the new Notice of Allowance.[2]

The terminal disclaimer however, is not required since the instant application was filed after June 8, 1995 and thus, the fee is being refunded to deposit account no. 13-4500.

The application is being forwarded to Technology Center 3654 for processing of the RCE.

Telephone inquiries related to this decision should be directed to the undersigned Petitions Attorney at (571) 272-3212.

Patricia Faison-Ball

Patricia Faison-Ball
Senior Petitions Attorney
Office of Petitions

[2] The request to apply the issue fee to the new Notice of Allowance must be made in writing and should be accompanied by the new Issue Fee Transmittal Form (PTOL-85(b)), along with a copy of this decision. Additionally, if the issue fee has increased from the previously paid issue fee, the balance due at the time of payment must be submitted. **Failure to timely request in writing that the previously paid issue fee be applied towards the new Notice of Allowance and payment of any balance due will result in the abandonment of the application.**

UNITED STATES PATENT AND TRADEMARK OFFICE

UNITED STATES DEPARTMENT OF COMMERCE
United States Patent and Trademark Office
Address: COMMISSIONER FOR PATENTS
P.O. Box 1450
Alexandria, Virginia 22313-1450
www.uspto.gov

Richard J. Minnich, Esq.
Fay, Sharpe, Fagan, Minnich & McKee, LLP
Seventh Floor
1100 Superior Avenue
Cleveland, OH 44114-2518

Mail Date: 04/21/2010

Applicant	: David S. Benco	: DECISION ON REQUEST FOR
Patent Number	: 7583974	: RECALCULATION of PATENT
Issue Date	: 09/01/2009	: TERM ADJUSTMENT IN VIEW
Appliction No	: 10/854,841	: OF WYETH AND NOTICE OF INTENT TO
Filed	: 05/27/2004	: ISSUE CERTIFICATE OF CORRECTION
		:

The Request for Recalculation is **GRANTED** to the extent indicated.

The patent term adjustment has been determined to be **1139** days. The USPTO will *sua sponte* issue a certificate of correction reflecting the amount of PTA days determined by the recalculation.

Prior to the issuance of the certificate of correction, the USPTO will afford patentee an opportunity to be heard and request reconsideration. Accordingly, patentee has **one month or thirty (30) days**, whichever is longer, to file a request for reconsideration of this patent term adjustment calculation. See 35 U.S.C. 154(b)(3)(B)(ii) and 37 CFR 1.322(a)(4). No extensions of time will be granted under 37 CFR 1.136.

Patentee should use document code PET.OP if electronically filing a request for reconsideration of this patent term adjustment calculation. The patentee must also include the information required by 37 CFR 1.705(b)(2) and the fee required by 37 CFR 1.18(e). If patentee does not file a timely request for reconsideration of this patent term adjustment calculation including the information required by 37 CFR 1.705(b)(2) and the fee required by 37 CFR 1.18(e), the USPTO will issue a certificate of correction reflecting the PTA determination noted above.

Patentee should be aware that in order to preserve the right to review in the United States District Court for the District of Columbia of the USPTO patent term adjustment determination, patentee must ensure that he or she also take the steps required under 35 U.S.C. 154(b)(4)(A) in a timely manner. Nothing in the request for recalculation should be construed as providing an alternative time frame for commencing a civil action under 35 U.S.C. 154(b)(4)(A).

Any questions concerning this decision should be directed to the Office of Patent Legal Administration at 571-272-7702.

UNITED STATES PATENT AND TRADEMARK OFFICE

Commissioner for Patents
United States Patent and Trademark Office
P.O. Box 1450
Alexandria, VA 22313-1450
www.uspto.gov

CST

2-15-07

In re application of Mathieu Lion Serial No. 10/854,865 Filed: May 27, 2004 For: FLEXIBLE MOLD WITH GRASPING HANDLES	:	DECISION ON PETITION TO MAKE SPECIAL

This is a decision on the petition filed on December 8, 2006 to make the above-identified application special based on infringement.

The petition to make the application special is **DENIED.**

REGULATION AND PRACTICE

Pursuant to the "Changes to Practice for Petitions in Patent Applications to Make Special and for Accelerated Examination" published in the Federal Register on June 26, 2006 (71 Fed. Reg. 36323), all petitions to make special, except those based on applicant's health or age or the PPH pilot, filed on or after August 25, 2006 are required to comply with the requirements of petitions to make special under the accelerated examination program. Note that any petition to make special under MPEP § 708.02, subsection II (infringement) was required to be filed prior to August 25, 2006.

To be eligible for accelerated examination under 37 C.F.R. § 1.102(d) and pursuant to the "Changes to Practice for Petitions in Patent Applications to Make Special and for Accelerated Examination" published in the Federal Register on June 26, 2006 (71 Fed. Reg. 36323), the following conditions must be satisfied:

1. The application must be a non-reissue utility or design application filed under 37 CFR 1.111(a) on or after August 25, 2006;
2. The application, the petition and the required fees must be filed electronically using the USPTO's electronic filing system (EFS), or EFS-web; if not filed electronically, a statement asserting that EFS and EFS-web were not available during the normal business hours;
3. The application, at the time of filing, must be complete under 37 CFR 1.51 and in condition for examination;
4. The application must contain three or fewer independent claims and twenty or fewer total claims and the claims must be directed to a single invention.

The application as filed is not eligible for accelerated examination under 37 C.F.R. § 1.102(d) because it was filed on May 27, 2004 (not on or after August 25, 2006); it was not filed electronically using the USPTO's electronic filing system (EFS), or EFS-web; and the application, at the time of filing, was not complete (see the Notice to File Missing Parts mailed August 11, 2004).

For the above-stated reasons, the petition is denied. The application will therefore be taken up by the examiner for action in its regular turn.

Any inquiry regarding this decision should be directed to Christine Tierney, Special Programs Examiner, at (571) 272-1055.

Christine Tierney
Special Programs Examiner
Technology Center 1700

UNITED STATES PATENT AND TRADEMARK OFFICE

Commissioner for Patents
United States Patent and Trademark Office
P.O. Box 1450
Alexandria, VA 22313-1450
www.uspto.gov

MERCHANT & GOULD PC
P.O. BOX 2903
MINNEAPOLIS, MN 55402-0903

COPY MAILED

APR 2 0 2006

OFFICE OF PETITIONS

In re Application of :
Lieven Stuyver et al :
Application No. 10/854,870 : ON PETITION
Filed: May 27, 2004 :
Attorney Docket No. PHAR1020US :

This is a decision on the petition under 37 CFR 1.137(b), filed January 24, 2006, to revive the above-identified application.

The petition is **GRANTED**.

The above-identified application became abandoned for failure to reply in a timely manner to the Notice to File Corrected Application Papers (Notice) mailed March 2, 2005. The Notice set a period for reply of two (2) months from the mail date of the Notice. No extensions of time under the provisions of 37 CFR 1.136(a) were obtained. Accordingly, the above-identified application became abandoned on May 3, 2005.

The instant petition has been found in compliance with 37 CFR 1.137(b). However, while the statement of unintentional delay does not comply with the rule, the statement presented will be construed as meaning that "the entire delay in filing the required reply from the due date for the reply until the filing of a grantable petition pursuant to 37 CFR 1.137(b) was unintentional." If this is an incorrect interpretation in view of the rules, petitioner is required to provide a statement to that effect.

Telephone inquiries concerning this decision should be directed to Wan Laymon at (571) 272-3220.

This application is being referred to the Office of Initial Patent Examination.

Wan Laymon

Wan Laymon
Petitions Examiner
Office of Petitions

UNITED STATES PATENT AND TRADEMARK OFFICE

Commissioner for Patents
United States Patent and Trademark Office
P.O. Box 1450
Alexandria, VA 22313-1450
www.uspto.gov

MERCHANT & GOULD
SCIENTIFIC ATLANTA, A CISCO COMPANY
P.O. BOX 2903
MINNEAPOLIS, MN 55402-0903

COPY MAILED
JAN 08 2010

In re Application of :
Arturo A. Rodriguez et al :
Application No. 10/854,874 : ON PETITION
Filed: May 27, 2004 :
Attorney Docket No.
60374.0052USD1/CPOL968619

This is a decision on the petition, filed January 7, 2010 under 37 CFR 1.313(c)(2) to withdraw the above-identified application from issue after payment of the issue fee.

The petition is **GRANTED**.

The above-identified application is withdrawn from issue for consideration of a submission under 37 CFR 1.114 (request for continued examination). See 37 CFR 1.313(c)(2).

Petitioner is advised that the issue fee paid on October 30, 2009 in the above-identified application cannot be refunded. If, however, the above-identified application is again allowed, petitioner may request that it be applied towards the issue fee required by the new Notice of Allowance.[1]

Telephone inquiries should be directed to Irvin Dingle at (571) 272-3210.

This matter is being referred to Technology Center AU 2621 for processing of the request for continued examination under 37 CFR 1.114 and for consideration of the concurrently filed Information Disclosure Statement.

/Irvin Dingle/
Irvin Dingle
Petitions Examiner
Office of Petitions

---

[1] The request to apply the issue fee to the new Notice may be satisfied by completing and returning the new Issue Fee Transmittal Form PTOL-85(b), which includes the following language thereon: Commissioner for Patents is requested to apply the Issue Fee and Publication Fee (if any) or re-apply any previously paid issue fee to the application identified above. Petitioner is advised that, whether a fee is indicated as being due or not, the Issue Fee Transmittal Form **must** be completed and timely submitted to avoid abandonment. Note the language in bold text on the first page of the Notice of Allowance and Fee(s) Due (PTOL-85).

UNITED STATES PATENT AND TRADEMARK OFFICE

Commissioner for Patents
United States Patent and Trademark Office
P.O. Box 1450
Alexandria, VA 22313-1450
www.uspto.gov

MERCHANT & GOULD
SCIENTIFIC ATLANTA, A CISCO COMPANY
P.O. BOX 2903
MINNEAPOLIS, MN 55402-0903

MAILED

APR 30 2010

OFFICE OF PETITIONS

In re Application of :
Arturo A. Rodriguez et al :
Application No. 10/854,874 : ON PETITION
Filed: May 27, 2004 :
Attorney Docket No.
60374.0052USD1/CPOL968619

This is a decision on the petition, filed April 29, 2010 under 37 CFR 1.313(c)(2) to withdraw the above-identified application from issue after payment of the issue fee.

The petition is **GRANTED**.

The above-identified application is withdrawn from issue for consideration of a submission under 37 CFR 1.114 (request for continued examination). See 37 CFR 1.313(c)(2).

Petitioner is advised that the issue fee paid on March 19, 2010 in the above-identified application cannot be refunded. If, however, the above-identified application is again allowed, petitioner may request that it be applied towards the issue fee required by the new Notice of Allowance.[1]

Telephone inquiries should be directed to Irvin Dingle at (571) 272-3210.

This matter is being referred to Technology Center AU 2621 for processing of the request for continued examination under 37 CFR 1.114 and for consideration of the concurrently filed Information Disclosure Statement.

/Irvin Dingle/
Irvin Dingle
Petitions Examiner
Office of Petitions

---

[1] The request to apply the issue fee to the new Notice may be satisfied by completing and returning the new Issue Fee Transmittal Form PTOL-85(b), which includes the following language thereon: Commissioner for Patents is requested to apply the Issue Fee and Publication Fee (if any) or re-apply any previously paid issue fee to the application identified above. Petitioner is advised that, whether a fee is indicated as being due or not, the Issue Fee Transmittal Form **must** be completed and timely submitted to avoid abandonment. Note the language in bold text on the first page of the Notice of Allowance and Fee(s) Due (PTOL-85).

UNITED STATES PATENT AND TRADEMARK OFFICE

Commissioner for Patents
United States Patent and Trademark Office
P.O. Box 1450
Alexandria, VA 22313-1450
www.uspto.gov

MERCHANT & GOULD
SCIENTIFIC ATLANTA, A CISCO COMPANY
P.O. BOX 2903
MINNEAPOLIS MN 55402-0903

MAILED

JUL 21 2010

OFFICE OF PETITIONS

In re Application of	:	
Arturo A. Rodriguez, et al.	:	
Application No. 10/854,874	:	DECISION GRANTING PETITION
Filed: May 27, 2004	:	UNDER 37 CFR 1.313(c)(2)
Attorney Docket No.	:	
60374.0052USD1/CPOL968619		

This is a decision on the petition under 37 CFR 1.313(c)(2), filed, July 20, 2010 to withdraw the above-identified application from issue after payment of the issue fee.

The petition is **GRANTED**.

The above-identified application is withdrawn from issue for consideration of a submission under 37 CFR 1.114 (request for continued examination). *See* 37 CFR 1.313(c)(2).

Petitioner is advised that the issue fee paid on June 17, 2010 cannot be refunded. If, however, this application is again allowed, petitioner may request that it be applied towards the issue fee required by the new Notice of Allowance.[1]

Telephone inquiries should be directed to Terri Johnson at (571) 272-2991.

This application is being referred to Technology Center AU 2621 for processing of the request for continued examination under 37 CFR 1.114 and for consideration of the concurrently filed information disclosure statement.

Terri Johnson
Petitions Examiner
Office of Petitions

---

[1] *The request to apply the issue fee to the new Notice may be satisfied by completing and returning the new Part B – Fee(s) Transmittal Form (along with any balance due at the time of submission). Petitioner is advised that the Issue Fee Transmittal Form* ***must*** *be completed and timely submitted to avoid abandonment of the application.*

UNITED STATES PATENT AND TRADEMARK OFFICE

UNITED STATES DEPARTMENT OF COMMERCE
United States Patent and Trademark Office
Address: COMMISSIONER FOR PATENTS
P.O. Box 1450
Alexandria, Virginia 22313-1450
www.uspto.gov

MUETING, RAASCH & GEBHARDT, P.A.
P.O. BOX 581336
MINNEAPOLIS, MN 55458-1336

Mail Date: 04/21/2010

Applicant	: T. Howard Killilea	: DECISION ON REQUEST FOR
Patent Number	: 7605209	: RECALCULATION of PATENT
Issue Date	: 10/20/2009	: TERM ADJUSTMENT IN VIEW
Appliction No	: 10/854,890	: OF WYETH AND NOTICE OF INTENT TO
Filed	: 05/27/2004	: ISSUE CERTIFICATE OF CORRECTION
		:

The Request for Recalculation is **GRANTED** to the extent indicated.

The patent term adjustment has been determined to be **817** days. The USPTO will *sua sponte* issue a certificate of correction reflecting the amount of PTA days determined by the recalculation.

Prior to the issuance of the certificate of correction, the USPTO will afford patentee an opportunity to be heard and request reconsideration. Accordingly, patentee has **one month or thirty (30) days**, whichever is longer, to file a request for reconsideration of this patent term adjustment calculation. See 35 U.S.C. 154(b)(3)(B)(ii) and 37 CFR 1.322(a)(4). No extensions of time will be granted under 37 CFR 1.136.

Patentee should use document code PET.OP if electronically filing a request for reconsideration of this patent term adjustment calculation. The patentee must also include the information required by 37 CFR 1.705(b)(2) and the fee required by 37 CFR 1.18(e). If patentee does not file a timely request for reconsideration of this patent term adjustment calculation including the information required by 37 CFR 1.705(b)(2) and the fee required by 37 CFR 1.18(e), the USPTO will issue a certificate of correction reflecting the PTA determination noted above.

Patentee should be aware that in order to preserve the right to review in the United States District Court for the District of Columbia of the USPTO patent term adjustment determination, patentee must ensure that he or she also take the steps required under 35 U.S.C. 154(b)(4)(A) in a timely manner. Nothing in the request for recalculation should be construed as providing an alternative time frame for commencing a civil action under 35 U.S.C. 154(b)(4)(A).

Any questions concerning this decision should be directed to the Office of Patent Legal Administration at 571-272-7702.

UNITED STATES PATENT AND TRADEMARK OFFICE

UNITED STATES DEPARTMENT OF COMMERCE
United States Patent and Trademark Office
Address: COMMISSIONER FOR PATENTS
P.O. Box 1450
Alexandria, Virginia 22313-1450
www.uspto.gov

SCHWEGMAN, LUNDBERG & WOESSNER, P.A.
P.O. BOX 2938
MINNEAPOLIS, MN 55402

Mail Date: 04/20/2010

Applicant	: Philip J. Ireland	: DECISION ON REQUEST FOR
Patent Number	: 7646099	: RECALCULATION of PATENT
Issue Date	: 01/12/2010	: TERM ADJUSTMENT IN VIEW
Appliction No	: 10/854,891	: OF WYETH AND NOTICE OF INTENT TO
Filed	: 05/27/2004	: ISSUE CERTIFICATE OF CORRECTION
		:

The Request for Recalculation is **GRANTED** to the extent indicated.

The patent term adjustment has been determined to be **0** days. The USPTO will *sua sponte* issue a certificate of correction reflecting the amount of PTA days determined by the recalculation.

Prior to the issuance of the certificate of correction, the USPTO will afford patentee an opportunity to be heard and request reconsideration. Accordingly, patentee has **one month or thirty (30) days**, whichever is longer, to file a request for reconsideration of this patent term adjustment calculation. See 35 U.S.C. 154(b)(3)(B)(ii) and 37 CFR 1.322(a)(4). No extensions of time will be granted under 37 CFR 1.136.

Patentee should use document code PET.OP if electronically filing a request for reconsideration of this patent term adjustment calculation. The patentee must also include the information required by 37 CFR 1.705(b)(2) and the fee required by 37 CFR 1.18(e). If patentee does not file a timely request for reconsideration of this patent term adjustment calculation including the information required by 37 CFR 1.705(b)(2) and the fee required by 37 CFR 1.18(e), the USPTO will issue a certificate of correction reflecting the PTA determination noted above.

Patentee should be aware that in order to preserve the right to review in the United States District Court for the District of Columbia of the USPTO patent term adjustment determination, patentee must ensure that he or she also take the steps required under 35 U.S.C. 154(b)(4)(A) in a timely manner. Nothing in the request for recalculation should be construed as providing an alternative time frame for commencing a civil action under 35 U.S.C. 154(b)(4)(A).

Any questions concerning this decision should be directed to the Office of Patent Legal Administration at 571-272-7702.

UNITED STATES PATENT AND TRADEMARK OFFICE

Commissioner for Patents
United States Patent and Trademark Office
P.O. Box 1450
Alexandria, VA 22313-1450
www.uspto.gov

FINNEGAN, HENDERSON, FARABOW, GARRETT & DUNNER LLP
901 NEW YORK AVENUE, NW
WASHINGTON DC 20001-4413

COPY MAILED
NOV 18 2008

In re Application of	:	
Thomas E. Trumble, et al.	:	
Application No. 10/854,892	:	ON PETITION
Filed: May 27, 2004	:	
Attorney Docket No. 37399-400100	:	

This is a decision on the petition under the unintentional provisions of 37 CFR 1.137(b), filed January 24, 2008, to revive the above-identified application.

The petition is **GRANTED**.

The application became abandoned for failure to timely file a reply within the meaning of 37 CFR 1.113 to the final Office action of September 19, 2006. The proposed reply required for consideration of a petition to revive must be a Notice of Appeal (and appeal fee required by 37 CFR 41.20(b)(2), an amendment that *prima facie* places the application in condition for allowance, a Request for Continued Examination and submission (37 CFR 1.114), or the filing of a continuing application under 37 CFR 1.53(b). See MPEP 711.03(c)(III)(A)(2). No extensions of time pursuant to the provisions of 37 CFR 1.136(a) were obtained. Accordingly, the date of abandonment of this application is December 20, 2006. The Notice of Abandonment was mailed April 5, 2007.

The petition satisfies the requirements of 37 CFR 1.137(b) in that petitioner has supplied (1) the reply in the form of a Request for Continued Examination (RCE) and fee of $810, and the submission required by 37 CFR 1.114; (2) the petition fee of $1,540; and (3) a proper statement of unintentional delay.

37 CFR 1.137(b)(3) requires a statement that "the entire delay in filing the required reply from the due date for the reply until the filing of a grantable petition pursuant to 37 CFR 1.137(b) was unintentional." Since the statement appearing in the petition varies from the language required by 37 CFR 1.137(b)(3), the statement is being construed as the required statement. Petitioner must notify the Office if this is not a correct reading of the statement appearing in the petition.

An extension of time under 37 CFR 1.136 must be filed prior to the expiration of the maximum extendable period for reply. See In re Application of S., 8 USPQ2d 1630, 1631 (Comm'r Pats. 1988). Since the $1,050 extension of time fee submitted with the petition on January 24, 2008 was subsequent to the maximum extendable period for reply, petitioner may request a refund of this fee by writing to the following address: Mail Stop 16, Commissioner for Patents, P. O. Box 1450, Alexandria, VA 22313-1450. A copy of this decision should accompany petitioner's request.

Telephone inquiries concerning this decision should be directed to Terri Williams at (571) 272-2991.

This application is being referred to Technology Center AU 3738 for processing of the RCE and for appropriate action by the Examiner in the normal course of business on the amendment previously submitted on October 19, 2006 in accordance with 37 CFR 1.114.

Chris Bottorff
Petitions Examiner
Office of Petitions

UNITED STATES PATENT AND TRADEMARK OFFICE

Commissioner for Patents
United States Patent and Trademark Office
P.O. Box 1450
Alexandria, VA 22313-1450
www.uspto.gov

LESAVICH HIGH-TECH LAW GROUP, P.C.
SUITE 325
39 S. LASALLE STREET
CHICAGO IL 60603

MAILED

JUN 01 2010

OFFICE OF PETITIONS

In re Application of	:	
PETTEGREW, Jay W. et al.	:	
Application No. 10/854,894	:	DECISION ON PETITION
Filed: May 27, 2004	:	TO WITHDRAW
Attorney Docket No. **04,122-A**	:	FROM RECORD
	:	

This is a decision on the Request to Withdraw as attorney or agent of record under 37 C.F.R. § 1.36(b), filed April 27, 2010.

The request is **APPROVED**.

A grantable request to withdraw as attorney/agent of record must be signed by every attorney/agent seeking to withdraw or contain a clear indication that one attorney is signing on behalf of another/others. The Office requires the practitioner(s) requesting withdrawal to certify that he, she, or they have: (1) given reasonable notice to the client, prior to the expiration of the response period, that the practitioner(s) intends to withdraw from employment; (2) delivered to the client or a duly authorized representative of the client all papers and property (including funds) to which the client is entitled; and (3) notified the client of any responses that may be due and the time frame within which the client must respond, pursuant 37 CFR 10.40(c).

The request was signed by Stephen Lesavich, the sole attorney of record. Stephen Lesavich has been withdrawn as attorney or agent of record. Applicant is reminded that there is no attorney of record at this time.

All future correspondence will be directed to the first named inventor Jay Pettegrew at the address indicated below.

Telephone inquiries concerning this decision should be directed to Tredelle Jackson at 571-272-2783.

/Tredelle D. Jackson/

Tredelle D. Jackson
Paralegal Specialist
Office of Petitions

cc: **JAY PETTEGREW**
630 SOUTH LINDEN AVENUE
PITTSBURGH PA 15208

UNITED STATES PATENT AND TRADEMARK OFFICE

Commissioner for Patents
United States Patent and Trademark Office
P.O. Box 1450
Alexandria, VA 22313-1450
www.uspto.gov

NIXON PEABODY LLP
161 N CLARK ST.
48TH FLOOR
CHICAGO IL 60601-3213

COPY MAILED
JAN 0 4 2008
OFFICE OF PETITIONS

In re Application of	:	
John J. Giobbi	:	
Application No. 10/854,897	:	ON PETITION
Filed: May 27, 2004	:	
Attorney Docket No. 47079-00107USD4	:	

This is a decision the petition to withdraw the holding of abandonment under 37 CFR 1.181, filed December 7, 2007.

The petition under 37 CFR 1.181(a) to withdraw the holding of abandonment is **granted**.

This application was held abandoned on June 30, 2007, after it was believed that no response was received to the final Office action mailed March 29, 2007. The notice allowed a shortened period for reply of three (3) months from its mailing date. Extensions of the time set for reply were available pursuant to 37 CFR 1.136(a). A Notice of Abandonment was mailed on November 23, 2007, indicating that a reply to the final Office action, was not received.

The instant petition maintains that the response to the final Office action was timely filed. A copy of the response with a certificate of mailing dated June 29, 2007, and a copy of the Office date-stamp postcard whereby the Office acknowledged having received a Request for Continued Examination on July 5, 2007. The abandonment is being withdrawn on the basis of the Office date-stamped postcard receipt.

Based on the aforementioned, it appears that the application was improperly held abandoned as a proper response was received prior to expiration of the period for reply. The holding of abandonment is withdrawn, accordingly.

The application file is being forwarded to Technology Center 3700, GAU 3714 for further processing, including processing of the Request for Continued Examination a copy of which was filed with the instant petition.

Questions regarding this decision may be directed to the undersigned at (571) 272-3222.

Kenya A. McLaughlin
Petitions Attorney
Office of Petitions

UNITED STATES PATENT AND TRADEMARK OFFICE

UNDER SECRETARY OF COMMERCE FOR INTELLECTUAL PROPERTY AND
DIRECTOR OF THE UNITED STATES PATENT AND TRADEMARK OFFICE
WASHINGTON, DC 20231
www.uspto.gov

MAILED
FROM DIRECTORS OFFICE

NOV 09 2005

TECHNOLOGY CENTER 3600

BANNER & WITCOFF, LTD.
TEN SOUTH WACKER DRIVE
SUITE 3000
CHICAGO, IL 60606

In re application of
Wayne J. Breda et al.
Application No. 10/854,907 : DECISION ON REQUEST
Filed: May 27, 2004 : FOR WITHDRAWAL OF
For: INTRAVENOUS EQUIPMENT SUPPORT ON : ATTORNEY
MOBILE POLE ASSEMBLY

This is a decision on the request filed on February 24, 2005, under 37 CFR 1.36 and MPEP 402.06, requesting permission to withdraw as the attorney of record in the above-identified application.

The request is **NOT APPROVED as MOOT**.

Under 37 CFR 1.36 an attorney may withdraw only upon application to and approval by the Commissioner. It should be noted that a withdrawal is effective when approved, not when filed. Besides giving due notice to his or her client and delivering to the client all papers and property to which the client is entitled as specified under 37 CFR 10.40, approval of such a request requires that the following conditions be met:

A) Each attorney of record must sign the notice of withdrawal, or the notice must contain a clear indication of one attorney signing on behalf of another, because the Office does not recognize law firms;

B) A proper reason for the withdrawal as enumerated in 37 CFR 10.40(b) or subsection (1)-(6) of 37 CFR 10.40(c) must be provided; and

C) If withdrawal is requested in accordance with 37 CFR 10.40(c) above, there must be at least 30 days between approval of the withdrawal and the later of the expiration date of a time period for reply or the expiration date of the period which can be obtained by a petition and fee for extension of time under 37 CFR 1.136(a).

The request to withdraw as attorney in the above-identified application is not approved as moot because the attorney making the request; Charles W. Shifley, does not now have, and apparently never has had, power of attorney in this application. Furthermore, since you never had Power of Attorney you can not change the correspondence address.

Kenneth J. Dorner
Special Programs Examiner
Technology Center 3600
(571) 272-6587

KJD/slb: 11/03/05

UNITED STATES PATENT AND TRADEMARK OFFICE

UNITED STATES DEPARTMENT OF COMMERCE
United States Patent and Trademark Office
Address: COMMISSIONER FOR PATENTS
P.O. Box 1450
Alexandria, Virginia 22313-1450
www.uspto.gov

IBM CORPORATION
3039 CORNWALLIS RD.
DEPT. T81 / B503, PO BOX 12195
RESEARCH TRIANGLE PARK, NC 27709

Mail Date: 04/20/2010

Applicant	: Srinivas Hasti	: DECISION ON REQUEST FOR
Patent Number	: 7610373	: RECALCULATION of PATENT
Issue Date	: 10/27/2009	: TERM ADJUSTMENT IN VIEW
Appliction No	: 10/854,908	: OF WYETH AND NOTICE OF INTENT TO
Filed	: 05/27/2004	: ISSUE CERTIFICATE OF CORRECTION
		:

The Request for Recalculation is **GRANTED** to the extent indicated.

The patent term adjustment has been determined to be **816** days. The USPTO will *sua sponte* issue a certificate of correction reflecting the amount of PTA days determined by the recalculation.

Prior to the issuance of the certificate of correction, the USPTO will afford patentee an opportunity to be heard and request reconsideration. Accordingly, patentee has **one month or thirty (30) days**, whichever is longer, to file a request for reconsideration of this patent term adjustment calculation. See 35 U.S.C. 154(b)(3)(B)(ii) and 37 CFR 1.322(a)(4). No extensions of time will be granted under 37 CFR 1.136.

Patentee should use document code PET.OP if electronically filing a request for reconsideration of this patent term adjustment calculation. The patentee must also include the information required by 37 CFR 1.705(b)(2) and the fee required by 37 CFR 1.18(e). If patentee does not file a timely request for reconsideration of this patent term adjustment calculation including the information required by 37 CFR 1.705(b)(2) and the fee required by 37 CFR 1.18(e), the USPTO will issue a certificate of correction reflecting the PTA determination noted above.

Patentee should be aware that in order to preserve the right to review in the United States District Court for the District of Columbia of the USPTO patent term adjustment determination, patentee must ensure that he or she also take the steps required under 35 U.S.C. 154(b)(4)(A) in a timely manner. Nothing in the request for recalculation should be construed as providing an alternative time frame for commencing a civil action under 35 U.S.C. 154(b)(4)(A).

Any questions concerning this decision should be directed to the Office of Patent Legal Administration at 571-272-7702.

UNITED STATES PATENT AND TRADEMARK OFFICE

UNITED STATES DEPARTMENT OF COMMERCE
United States Patent and Trademark Office
Address: COMMISSIONER FOR PATENTS
P.O. Box 1450
Alexandria, Virginia 22313-1450
www.uspto.gov

MEYERTONS, HOOD, KIVLIN, KOWERT & GOETZEL, P.C.
P.O. BOX 398
AUSTIN, TX 78767-0398

Mail Date: 04/20/2010

Applicant	: Darren M. Nattinger	: DECISION ON REQUEST FOR
Patent Number	: 7650594	: RECALCULATION of PATENT
Issue Date	: 01/19/2010	: TERM ADJUSTMENT IN VIEW
Appliction No	: 10/854,910	: OF WYETH AND NOTICE OF INTENT TO
Filed	: 05/27/2004	: ISSUE CERTIFICATE OF CORRECTION
		:

The Request for Recalculation is **GRANTED** to the extent indicated.

The patent term adjustment has been determined to be **847** days. The USPTO will *sua sponte* issue a certificate of correction reflecting the amount of PTA days determined by the recalculation.

Prior to the issuance of the certificate of correction, the USPTO will afford patentee an opportunity to be heard and request reconsideration. Accordingly, patentee has **one month or thirty (30) days**, whichever is longer, to file a request for reconsideration of this patent term adjustment calculation. See 35 U.S.C. 154(b)(3)(B)(ii) and 37 CFR 1.322(a)(4). No extensions of time will be granted under 37 CFR 1.136.

Patentee should use document code PET.OP if electronically filing a request for reconsideration of this patent term adjustment calculation. The patentee must also include the information required by 37 CFR 1.705(b)(2) and the fee required by 37 CFR 1.18(e). If patentee does not file a timely request for reconsideration of this patent term adjustment calculation including the information required by 37 CFR 1.705(b)(2) and the fee required by 37 CFR 1.18(e), the USPTO will issue a certificate of correction reflecting the PTA determination noted above.

Patentee should be aware that in order to preserve the right to review in the United States District Court for the District of Columbia of the USPTO patent term adjustment determination, patentee must ensure that he or she also take the steps required under 35 U.S.C. 154(b)(4)(A) in a timely manner. Nothing in the request for recalculation should be construed as providing an alternative time frame for commencing a civil action under 35 U.S.C. 154(b)(4)(A).

Any questions concerning this decision should be directed to the Office of Patent Legal Administration at 571-272-7702.

UNITED STATES PATENT AND TRADEMARK OFFICE

Commissioner for Patents
United States Patent and Trademark Office
P.O. Box 1450
Alexandria, VA 22313-1450
www.uspto.gov

3M INNOVATIVE PROPERTIES COMPANY
PO BOX 33427
ST. PAUL MN 55133-3427

COPY MAILED

MAR 2 6 2007

OFFICE OF PETITIONS

In re Application of	:	
Xudong Fan, et al.	:	
Application No. 10/854,911	:	DECISION GRANTING PETITION
Filed: May 27, 2004	:	UNDER 37 CFR 1.313(c)(2)
Attorney Docket No. 59684US002	:	

This is a decision on the petition under 37 CFR 1.313(c)(2), filed March 22, 2007, to withdraw the above-identified application from issue after payment of the issue fee.

The petition is **GRANTED**.

The above-identified application is withdrawn from issue for consideration of a submission under 37 CFR 1.114 (request for continued examination). *See* 37 CFR 1.313(c)(2).

Petitioner is advised that the issue fee paid on March 1, 2007 cannot be refunded. If, however, this application is again allowed, petitioner may request that it be applied towards the issue fee required by the new Notice of Allowance.[1]

Telephone inquiries regarding this decision should be directed to April Wise at (571) 272-1642.

This application is being referred to Technology Center AU 2878 for processing of the request for continued examination under 37 CFR 1.114 and for consideration of the concurrently filed information disclosure statement.

Karen Creasy

Karen Creasy
Petitions Examiner
Office of Petitions

[1] *The request to apply the issue fee to the new Notice may be satisfied by completing and returning the new Part B – Fee(s) Transmittal Form (along with any balance due at the time of submission). Petitioner is advised that the Issue Fee Transmittal Form* ***must*** *be completed and timely submitted to avoid abandonment of the application.*

UNITED STATES PATENT AND TRADEMARK OFFICE

COMMISSIONER FOR PATENTS
UNITED STATES PATENT AND TRADEMARK OFFICE
P.O. BOX 1450
ALEXANDRIA, VA 22313-1450
www.uspto.gov

JJGJR.: 11-04

Paper No: __

JEFFERSON PERKINS
DASPIN & AUMENT, LLP
SUITE 1220
10 S. RIVERSIDE PLAZA
CHICAGO IL 60606-3710

COPY MAILED
NOV 19 2004
OFFICE OF PETITIONS

In re Application of

Filippini
Application No. 10/854,938
Filing Date: 27 May, 2004
Attorney Docket No. 301482-00035

DECISION ON PETITION

This is a decision on the petition filed on 30 August, 2004, and considered under 37 C.F.R. §1.53, to obtain a filing date of 27 May, 2004, for Figure 1, as describe in the specification of the application.

The petition is **GRANTED**.

BACKGROUND

This nonprovisional application was deposited on 27 May, 2004.

On 18 August, 2004, the Office mailed a "Notice of Incomplete Nonprovisional Application," (the 18 August Notice) and indicated, *inter alia*, that "Figure(s) 1 as described in the specification" appeared to be missing on deposit of the application.

The 18 August Notice further informed Petitioner that, should he contend that the missing figure was deposited with the rest of the application at the time of filing, he could petition and make a showing to that effect, or he could accept the application as filed, or could submit the missing figure and accept the date of that submission as the date of filing.

The petition filed on 30 August, 2004, states that it is accompanied, *inter alia*, by a date-stamped

("52704") receipt card itemizing the contents of the application received by the Office and a copy of Figure 1 as described in the specification.

ANALYSIS

A review of the record reveals that:

- the instant application was deposited with the Office on 27 May, 2004; and
- the receipt card (see: MPEP §503[1]) is date stamped and provides, *inter alia*:

---

[1] MPEP §503 provides in pertinent part:

§503 Application Number and Filing Receipt

* * *

A return postcard should be attached to *each* patent application for which a receipt is desired. It is important that the return postcard itemize all of the components of the application. If the postcard does not itemize each of the components of the application, it will not serve as evidence that any component which was not itemized was received by the United States Patent and Trademark Office (USPTO). It should be recognized that the identification of an application by application number does not necessarily signify that the USPTO has accepted the application as complete (37 C.F.R. §1.53(a)).

* * *

RETURN POSTCARD

If a receipt of any item (e.g., paper or fee) filed in the USPTO is desired, it may be obtained by enclosing with the paper a self-addressed postcard specifically identifying the item. The USPTO will stamp the receipt date on the postcard and place it in the outgoing mail. A postcard receipt which itemizes and properly identifies the items which are being filed serves as *prima facie* evidence of receipt in the USPTO of all the items listed thereon on the date stamped thereon by the USPTO.

The identifying data on the postcard should be so complete as to clearly identify the item for which receipt is requested. For example, the postcard should identify the applicant's name, application number (if known), confirmation number (if known), filing date, interference number, title of the invention, etc. The postcard should also identify the type of paper being filed, e.g., new application, affidavit, amendment, notice of appeal, appeal brief, drawings, fees, motions, supplemental oath or declaration, petition, etc., and the number of pages being submitted. If a new application is being filed, all parts of the application being submitted should be separately listed on the postcard, e.g., the number of pages of specification (including written description, claims and abstract), number of claims, number of sheets of drawings, number of pages of oath/declaration, number of pages of cover sheet (provisional application).

The postcard receipt will not serve as *prima facie* evidence of receipt of any item which is not adequately itemized on the postcard. For example, merely listing on the postcard "a complete application" or "patent application" will not serve as a proper receipt for each of the required components of an application (e.g., specification (including claims), drawings (if necessary), oath or declaration and the application filing fee) or missing portions (e.g., pages, sheets of drawings) of an application if one of the components or portion of a component is found to be missing by the USPTO. Each separate component should be specifically and properly itemized on the postcard. Furthermore, merely incorporating by reference in the postcard receipt, the items listed in a transmittal letter will not serve as *prima facie* evidence of receipt of those items.

The person receiving the item(s) in the USPTO will check the listing on the postcard against the item(s) being filed to be sure they are properly identified and that all the items listed on the postcard are presently being submitted to the USPTO. If any of the items listed on the postcard are not being submitted to the USPTO, those items will be crossed off and the post-card initialed by the person receiving the items. Upon return of a postcard receipt from the USPTO, the postcard receipt should be promptly reviewed by the person who filed the items to ensure that every item specifically denoted on the postcard was received by the USPTO. If the postcard receipt has been annotated to indicate that a particular item denoted on the postcard was not received by the USPTO, the postcard receipt will not serve as *prima facie* evidence of receipt of that item in the USPTO. (Emphasis supplied.)

* * *

Enclosures

* * *

6. 9 Drawing Sheets (Informal)

* * *

(It is noted that, while the receipt card contains hand written notations, Petitioner evidences with a copy of the card as submitted that the hand written notations on the card were present before/at the time Petitioner submitted the card to the Office.)

The record further discloses that the drawing sheets that the Office acknowledges receiving are sequentially numbered, e.g., "2/9," "3/9" . . . "9/9," and there are no duplicate sheets/figures.

Because the return postcard receipt properly itemizes the contents of the application package in accordance with MPEP §503, the Office concludes that the Figure(s) 1 as described in the specification was submitted on 27 May, 2004, and subsequently was misplaced in the Office.

Accordingly, the petition under 37 C.F.R. §1.53 is **granted**; the petition fee is waived and refunded via Treasury check; and the Notice mailed on 18 August, 2004, hereby is withdrawn as to Figure(s) 1 as described in the specification.

This application is released to the Office of Initial Patent Examination for further processing with a filing date of 27 May, 2004, for the entire application and in particular for Figure(s) 1 as described in the specification using:

- pages 1 - 35 (Specification, Claims, Abstract, and 8 sheets of drawings (Fig(s). 2 - 9) deposited on 27 May, 2004; and

- Fig(s). 1 as described in the specification, deposited on 30 August, 2004;

- with direction to OIPE to correct Office records to reflect that 35 pages of specification (description, claims and abstract) and 9 sheets of drawings were present on filing on 27 May, 2004, and forward to Petitioner a corrected filing receipt setting forth a filing date of 27 May, 2004, reflecting therein that 35 pages of specification (description, claims and abstract) and 9 sheets of drawings were present on filing.

Thereafter, the application will be considered by the examiner in due course.

Telephone inquiries concerning this decision may be directed to the undersigned at (571) 272-3214.

John J. Gillon, Jr.
Senior Attorney
Office of Petitions

UNITED STATES PATENT AND TRADEMARK OFFICE

UNITED STATES DEPARTMENT OF COMMERCE
United States Patent and Trademark Office
Address: COMMISSIONER FOR PATENTS
P.O. Box 1450
Alexandria, Virginia 22313-1450
www.uspto.gov

JENKINS, WILSON, TAYLOR & HUNT, P. A.
Suite 1200 UNIVERSITY TOWER
3100 TOWER BLVD.,
DURHAM, NC 27707

Mail Date: 04/21/2010

Applicant	: Edward L. LeCluyse	: DECISION ON REQUEST FOR
Patent Number	: 7604934	: RECALCULATION of PATENT
Issue Date	: 10/20/2009	: TERM ADJUSTMENT IN VIEW
Appliction No	: 10/854,963	: OF WYETH AND NOTICE OF INTENT TO
Filed	: 05/27/2004	: ISSUE CERTIFICATE OF CORRECTION
		:

The Request for Recalculation is **GRANTED** to the extent indicated.

The patent term adjustment has been determined to be **164** days. The USPTO will *sua sponte* issue a certificate of correction reflecting the amount of PTA days determined by the recalculation.

Prior to the issuance of the certificate of correction, the USPTO will afford patentee an opportunity to be heard and request reconsideration. Accordingly, patentee has **one month or thirty (30) days**, whichever is longer, to file a request for reconsideration of this patent term adjustment calculation. See 35 U.S.C. 154(b)(3)(B)(ii) and 37 CFR 1.322(a)(4). No extensions of time will be granted under 37 CFR 1.136.

Patentee should use document code PET.OP if electronically filing a request for reconsideration of this patent term adjustment calculation. The patentee must also include the information required by 37 CFR 1.705(b)(2) and the fee required by 37 CFR 1.18(e). If patentee does not file a timely request for reconsideration of this patent term adjustment calculation including the information required by 37 CFR 1.705(b)(2) and the fee required by 37 CFR 1.18(e), the USPTO will issue a certificate of correction reflecting the PTA determination noted above.

Patentee should be aware that in order to preserve the right to review in the United States District Court for the District of Columbia of the USPTO patent term adjustment determination, patentee must ensure that he or she also take the steps required under 35 U.S.C. 154(b)(4)(A) in a timely manner. Nothing in the request for recalculation should be construed as providing an alternative time frame for commencing a civil action under 35 U.S.C. 154(b)(4)(A).

Any questions concerning this decision should be directed to the Office of Patent Legal Administration at 571-272-7702.

SPE RESPONSE FOR CERTIFICATE OF CORRECTION

Paper No.:

DATE : December 12, 2006

TO SPE OF : ART UNIT 3612

SUBJECT : Request for Certificate of Correction on Patent No.: ~~7,108,466~~

A response is requested with respect to the accompanying request for a certificate of correction.

Please complete this form and return with file, within **7** days to:
Certificates of Correction Branch - ST (South Tower) 9A22
Palm location **7590** - Tel. No. (703) 305-8309

With respect to the change(s) requested, correcting Office and/or Applicant's errors, should the patent read as shown in the certificate of correction? No new matter should be introduced, nor should the scope or meaning of the claims be changed.

Thank You For Your Assistance **Certificates of Correction Branch**

The request for issuing the above-identified correction(s) is hereby:

Note your decision on the appropriated box.

☒ **Approved** All changes apply.

☐ **Approved in Part** Specify below which changes **do not** apply.

☐ **Denied** State the reasons for denial below.

Comments:

D. GLENN DAYOAN
SUPERVISORY PATENT EXAMINER
TECHNOLOGY CENTER 3600

SPE: D. Glenn Dayoan 12/12/06 Art Unit 3612

UNITED STATES PATENT AND TRADEMARK OFFICE

Commissioner for Patents
United States Patent and Trademark Office
P.O. Box 1450
Alexandria, VA 22313-1450
www.uspto.gov

SALVATORE R. UGLIETTO
42 MAYFLOWER ROAD
WINCHESTER MA 01890

COPY MAILED

JUN 09 2008

OFFICE OF PETITIONS

In re Application of
Salvatore R. Uglietto
Application No. 10/854,999
Filed: November 12, 2003
Title of Invention: **STRAIGHT SHOT GOLF CLUB**

ON PETITION

This is a decision on the petition filed April 9, 2008 to withdraw the holding of abandonment, which is being treated under 37 CFR 1.181.

The petition under 37 CFR 1.181 is **DISMISSED**.

Any request for reconsideration of this decision must be submitted within **TWO (2) MONTHS** from the mail date of this decision. Extensions of time under 37 CFR 1.136(a) are permitted. The reconsideration request should include a cover letter entitled "Renewed Petition under 37 CFR 1.181," or, as explained in more detail below, "...under 37 CFR 1.137(a)" or (b). This is not a final agency decision.

At the outset, a review of the application history is probably in order.

A non-final action was mailed April 13, 2007. Applicant's response to the April 13, 2007 non-final action included an amendment received April 20, 2007 that was deemed to be non-compliant (see the Notice of Non-Compliant Amendment, mailed May 2, 2007). In responding to the non-compliant matters, the applicant submitted another amendment, received May 7, 2007. It was determined that the amendment received May 7, 2007, while appearing to be a bona fide response, was not fully responsive to the last non-final Office action. Accordingly, on July 26, 2007, the applicant was made aware of the deficiencies in the amendment and was provided with a one month or thirty day time period within which to provide the additional material needed to complete his response. While the applicant timely responded with an amendment on August 24, 2007, the amendment was deemed to be non-responsive. A subsequent amendment received September 20, 2007 was received outside of the prior thirty day time period set for response and was thus not entered. Neither of the amendments received August 24, 2007 and September 20, 2007 were considered to be bona fide attempts at advancing the prosecution of this application. Through another letter, mailed December 31, 2007, the applicant was informed of the position of the Office with respect to these last two amendments received.

While petitioner requests that the holding of abandonment be withdrawn, no basis for why the abandonment should be withdrawn has been proffered, other than the fact that petitioner has repeatedly responded to the Examiner's letters. Unfortunately that is not a sufficient basis for doing so.

Even though responses have been filed, the application is abandoned because a proper and timely response has not been filed. Accordingly, the Notice of Abandonment mailed March 6, 2008 was appropriate.

In view thereof, the holding of abandonment will not be withdrawn.

It is understood that petitioner is a pro se applicant, but petitioner is still responsible for the proper prosecution of his application. The format and wording of the papers filed are that of an inexperienced petitioner. In further petitioning, there are numerous resources available to petitioner, as to the others who have chosen this path of prosecution, to obtain the necessary information to properly prosecute the application before the Office. The services of a registered attorney or agent to help the petitioner understand the requirements for responding to the office action as well as the petitioning process are recommended, although not required.

ALTERNATIVE VENUES

Petitioner may wish to consider filing a renewed petition under 37 CFR 1.137(a)[1] or 37 CFR 1.137(b),[2] which now provides that where the delay in reply was unintentional, a petition

---

[1]A grantable petition under 37 CFR 1.137(a) must be accompanied by:

(1) the required reply, unless previously filed; In a nonprovisional application abandoned for failure to prosecute, the required reply may be met by the filing of a continuing application. In a nonprovisional utility or plant application filed on or after June 8, 1995, and abandoned for failure to prosecute, the required reply may also be met by the filing of a request for continued examination in compliance with § 1.114. In an application or patent, abandoned or lapsed for failure to pay the issue fee or any portion thereof, the required reply must be the payment of the issue fee or any outstanding balance thereof.

(2) the petition fee as set forth in 37 CFR 1.17(l);

(3) a showing to the satisfaction of the Commissioner that the entire delay in filing the required reply from the due date for the reply until the filing of a grantable petition pursuant to 37 CFR 1.137(a) was unavoidable; and

(4) any terminal disclaimer (and fee as set forth in 37 CFR 1.20(d)) required pursuant to 37 CFR 1.137(c)).

[2]Effective December 1, 1997, the provisions of 37 CFR 1.137(b) now provide that where the delay in reply was unintentional, a petition may be filed to revive an abandoned application or a lapsed patent pursuant to 37 CFR 1.137(b). A grantable petition filed under the provisions of 37 CFR 1.137(b) must be accompanied by:

(1) the required reply, unless previously filed. In a nonprovisional application abandoned for failure to prosecute, the required reply may be met by the filing of a continuing application. In a nonprovisional application filed on or after June 8, 1995, and abandoned for failure to prosecute, the required reply may also be met by the filing of a request for continued examination in compliance with § 1.114. In an application or patent, abandoned or lapsed for failure to pay the issue fee or any portion thereof, the required reply must be the payment of the issue fee or any outstanding balance thereof. In an application abandoned for failure to pay the publication fee, the required reply must include payment of the publication fee.

may be filed to revive an abandoned application or a lapsed patent pursuant to 37 CFR 1.137(b).

The filing of a petition under the unintentional standard cannot be intentionally delayed and therefore should be filed promptly. A person seeking revival due to unintentional delay cannot make a statement that the delay was unintentional unless the entire delay, including the delay from the date it was discovered that the application was abandoned until the filing of the petition to revive under 37 CFR 1.137(b), was unintentional. A statement that the delay was unintentional is not appropriate if petitioner intentionally delayed the filing of a petition for revival under 37 CFR 1.137(b).

Further correspondence with respect to this matter should be addressed as follows:

By mail: Mail Stop Petition
Commissioner for Patents
P.O. Box 1450
Alexandria, VA 22313-1450

By FAX: (571) 273-8300

Telephone inquiries concerning this matter may be directed to the undersigned Petitions Attorney at (571) 272-3212.

Patricia Faison-Ball

Patricia Faison-Ball
Senior Petitions Attorney
Office of Petitions

---

(2) the petition fee as set forth in 37 CFR 1.17(m);

(3) a statement that the entire delay in filing the required reply from the due date for the reply until the filing of a grantable petition pursuant to 37 CFR 1.137(b) was unintentional. The Commissioner may required additional information where there is a question whether the delay was unintentional; and

(4) any terminal disclaimer (and fee as set forth in 37 CFR 1.20(d)) required pursuant to 37 CFR 1.137(c)).

UNITED STATES PATENT AND TRADEMARK OFFICE

Commissioner for Patents
United States Patent and Trademark Office
P.O. Box 1450
Alexandria, VA 22313-1450
www.uspto.gov

Robert B. McMillan
337 La Mirada
El Paso, TX 79932

MAILED

JUL 05 2005

Director's Office
Group 3700

In re application of
Robert B. McMillan, et al.

Serial Number: 10/855006
Filed: June 24, 2003

DECISION ON PETITION TO MAKE SPECIAL UNDER 37 CFR. 1.102(c)

For: **MICROPROCESSOR CONTROLLER EVAPORATIVE COOLER**

This is a decision on the petition filed on June 24, 2003, under 37 CFR. 1.102(c) to make special the above identified application because of the age/health of the applicant. Since the requirements of the M.P.E.P Section 708.02 IV have been met, the petition will be GRANTED.

The examiner is directed (1) to make an interference search for possible interfering applications, (2) to promptly examine this application out of turn, and (3) if any interfering application is discovered, to examine such application simultaneously and state in the first official letter of such application that it is being taken out of turn because of a possible interference.

Petitioner is advised that this application will continue to be special, throughout its entire prosecution and pendency, including interference or appeal, if any, only is Petitioner makes a prompt bona-fide effort, in response to each Office action, to place the application in condition for allowance, even if it is necessary to conduct an interview with the Examiner to accomplish this purpose.

Summary: Decision on Petition **GRANTED**.

Richard A. Bertsch
Director
Technology Center 3700
(571) 272-3750

rt: 7/1/05

UNITED STATES PATENT AND TRADEMARK OFFICE

Commissioner for Patents
United States Patent and Trademark Office
P.O. Box 1450
Alexandria, VA 22313-1450
www.uspto.gov

RICHARD ESTY PETERSON
PATENT ATTORNEY
1905-D Palmetto Avenue
Pacifica CA 94044

COPY MAILED
APR 13 2006
OFFICE OF PETITIONS

In re Application of :
Josh Rifkin :
Application No. 10/855,007 : ON PETITION
Filed: August 1, 2003 :
Attorney Docket Number: 6021

This is a decision on the petition under 37 CFR 1.137(b), filed March 27, 2006, to revive the above-identified application.

This above-identified application became abandoned for failure to timely file a reply to the non-final Office Action of March 24, 2005. The non-final Office Action set a three (3) month shortened statutory period for reply. No extensions of time were obtained under the provisions of 37 CFR §1.136(a). Accordingly, this application became abandoned on June 25, 2005. A Notice of Abandonment was mailed on October 4, 2005.

This petition is hereby **Granted**.

The office hereby acknowledges the receipt of the amendment, IDS, drawings and specification submitted with the instant petition.

This application is being forwarded to Technology Center 3700 for further processing.

Telephone inquiries concerning this matter should be directed to the undersigned at (571) 272-3215.

Charlema R. Grant
Petitions Attorney
Office of Petitions

UNITED STATES PATENT AND TRADEMARK OFFICE

Commissioner for Patents
United States Patent and Trademark Office
P.O. Box 1450
Alexandria, VA 22313-1450
www.uspto.gov

BROWN, RAYSMAN, MILLSTEIN, FELDER & STEINER LLP
900 THIRD AVENUE
NEW YORK, NY 10022

COPY MAILED

JAN 1 2 2005

OFFICE OF PETITIONS

In re Application of
Matthew J. DeAngelis
Application No.: 10/855,009
Filed: May 27, 2004
Attorney Docket No: **3775/24A CON**

ON PETITION

This is a decision on the petition under 37 CFR 1.28(c), filed December 3, 2004.

The petition is **GRANTED.**

The record reflects that the filing fee, claims fees, and extension of time fees for the above-cited application were paid at the small entity rate. Petitioner later discovered that the inventive entity did not qualify as a small entity and filed the instant petition, accordingly.

Petitioner has remitted the deficient amount of $1,044.00.

Pursuant to 37 CFR 1.28(d), the payment of the deficient amount will be treated under 37 CFR 1.27(g)(2) as a notification of a loss of entitlement to small entity status.

The application file will be directed to Technology Center 2100 for further processing.

Telephone inquiries regarding this decision should be directed to the undersigned at (571) 272-3222.

Kenya A. McLaughlin
Petitions Attorney
Office of Petitions

UNITED STATES PATENT AND TRADEMARK OFFICE

Commissioner for Patents
United States Patent and Trademark Office
P.O. Box 1450
Alexandria, VA 22313-1450
www.uspto.gov

Zilka-Kotab, PC
P.O. BOX 721120
SAN JOSE CA 95172-1120

COPY MAILED

DEC 10 2007

OFFICE OF PETITIONS

In re Application of

Matthew J. DeAngelis

Application No. 10/855,009

Filed: May 27, 2004

Attorney Docket No.3775/24A CON

DECISION ON PETITION

This is a decision on the petition under 37 CFR 1.137(b), filed November 21, 2007, to revive the above-identified application.

The petition is **GRANTED**.

The above-cited application became abandoned for failure to reply in a timely manner to the non-final Office action mailed January 29, 2007, which set a shortened statutory period for reply of three (3) months from its mailing date. No extensions of time were obtained within the allowable period. Accordingly, the application became abandoned on April 30, 2007.

The amendment filed November 21, 2007, is noted.

The application is being forwarded to Technology Center 2100, GAU 2194 for further processing.

Telephone inquiries concerning this decision should be directed to the undersigned at (571) 272-3222.

Kenya A. McLaughlin
Petitions Attorney
Office of Petitions

UNITED STATES PATENT AND TRADEMARK OFFICE

Commissioner for Patents
United States Patent and Trademark Office
P.O. Box 1450
Alexandria, VA 22313-1450
www.uspto.gov

COOK ALEX LTD
SUITE 2850
200 WEST ADAMS STREET
CHICAGO, IL 60606

MAILED

MAR 23 2010

OFFICE OF PETITIONS

In re Patent of Kang et al.	:	DECISION ON REQUEST
Patent No. 7,569,245	:	FOR RECONSIDERATION OF
Issue Date: August 4, 2009	:	PATENT TERM ADJUSTMENT
Application No. 10/855,028	:	AND NOTICE OF INTENT TO
Filing Date: May 26, 2004	:	ISSUE CERTIFICATE OF
Attorney Docket No. 0820-0443	:	CORRECTION

This is a decision on the petition filed on October 2, 2009, which is being treated as a petition under 37 C.F.R. § 1.705(d) requesting that the patent term adjustment indicated on the patent be corrected to indicate the term of the above-identified patent is extended or adjusted by one thousand three hundred eighty-three (1,383) days.

The petition to correct the patent term adjustment indicated on the above-identified patent to indicate the term of the above-identified patent is extended or adjusted by one thousand three hundred eighty-three (1,383) days is **GRANTED**.

The Office acknowledges submission of the $200.00 fee set forth in 37 C.F.R. § 1.18(e). No additional fees are required.

The application is being forwarded to the Certificates of Correction Branch for issuance of a certificate of correction. The Office will issue a certificate of correction indicating that the term of the patent is extended or adjusted by **one thousand three hundred eighty-three (1,383)** days.

Telephone inquiries specific to this decision should be directed to Senior Petitions Attorney Steven Brantley at (571) 272-3203.

Anthony Knight
Supervisor
Office of Petitions

Enclosure: Copy of DRAFT Certificate of Correction

UNITED STATES PATENT AND TRADEMARK OFFICE

CERTIFICATE OF CORRECTION

PATENT NO.	:	7,569,245 B2
ISSUE DATE	:	August 4, 2009
INVENTOR(S)	:	Kang et al.

DRAFT

It is certified that error appears in the above-identified patent and that said Letters Patent is hereby corrected as shown below:

On the cover page,

[*] Notice: Subject to any disclaimer, the term of this patent is extended or adjusted under 35 U.S.C. 154(b) by 888 days.

Delete the phrase "by 888 days" and insert - by 1383 days--

US007569245B2

(12) **United States Patent**
Kang et al.

(10) **Patent No.: US 7,569,245 B2**
(45) **Date of Patent: Aug. 4, 2009**

(54) **WASHED DEBONED MEAT HAVING HIGH PROTEIN RECOVERY**

(75) Inventors: **Iksoon Kang**, Madison, WI (US); **Gary Robert Skaar**, Marshall, WI (US); **William Nathaniel Gale Barron, III**, Waunakee, WI (US); **Cory Jay Painter**, Madison, WI (US); **James Donald Colby**, Shakopee, MN (US); **Henri K. Salman**, Simpsonville, SC (US)

(73) Assignee: **Kraft Foods Holdings, Inc.**, Northfield, IL (US)

(*) Notice: Subject to any disclaimer, the term of this patent is extended or adjusted under 35 U.S.C. 154(b) by 888 days.

(21) Appl. No.: **10/855,028**

(22) Filed: **May 26, 2004**

(65) **Prior Publication Data**

US 2005/0266145 A1 Dec. 1, 2005

(51) **Int. Cl.**
A22C 17/08 (2006.01)

(52) **U.S. Cl.** **426/646**; 426/495; 426/518; 452/135; 210/773; 210/787; 210/806

(58) **Field of Classification Search** 426/641–647, 426/443, 455, 464, 478, 495, 519, 805, 807, 426/518; 210/767, 773, 787, 806; 452/135–140; 99/537

See application file for complete search history.

(56) **References Cited**

U.S. PATENT DOCUMENTS

3,112,203 A * 11/1963 Watt 426/59
3,594,190 A * 7/1971 Eslinger et al. 426/646
3,891,780 A * 6/1975 Novak et al. 426/657
4,193,869 A * 3/1980 Brucker et al. 210/705
RE32,060 E 12/1985 McFarland
4,708,055 A * 11/1987 Matsumoto et al. 99/484
5,507,954 A * 4/1996 Carrillo 210/703
5,650,187 A * 7/1997 Franklin et al. 426/417
5,667,435 A 9/1997 Baughman et al.
5,698,255 A * 12/1997 Roehrig et al. 426/646
5,762,993 A * 6/1998 Gundlach et al. 426/646
5,813,909 A 9/1998 Goldston
6,001,398 A 12/1999 Noda et al.
6,235,339 B1 * 5/2001 Harmon et al. 426/646
6,451,975 B1 9/2002 Hultin et al.

OTHER PUBLICATIONS

Henri K. Salman, "Ageuous Processing Influences on Composition and Functionally of Mechanically Seperated Broiler Meat", A Disseration, Louisana State University, Dec. 1995.

Froning, et al. "Improving the Quality of Mechanically Deboned Fowl Meat by Centrifugation", Journal of Food Science; vol. 38 (1973).

(Continued)

Primary Examiner—Drew E Becker
(74) *Attorney, Agent, or Firm*—Cook Alex Ltd.

(57) **ABSTRACT**

Deboned meat is subjected to processing in a surimi-type procedure in order to substantially reduce the heme content and thus the color intensity of the deboned meat, with bone marrow components and fat also being removed. When desired, the washed meat is subjected to dewatering, such as by pressing, in order to provide a color and fat reduced deboned meat. Multiple-stage separation is practiced, and the protein yield of the washed meat is advantageously elevated.

24 Claims, 4 Drawing Sheets

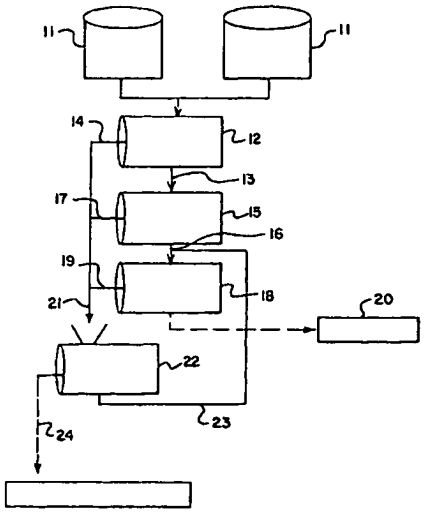

UNITED STATES PATENT AND TRADEMARK OFFICE

UNITED STATES DEPARTMENT OF COMMERCE
United States Patent and Trademark Office
Address: COMMISSIONER FOR PATENTS
P.O. Box 1450
Alexandria, Virginia 22313-1450
www.uspto.gov

COOK ALEX LTD
SUITE 2850
200 WEST ADAMS STREET
CHICAGO, IL 60606

Mail Date: 04/21/2010

Applicant	: Iksoon Kang	: DECISION ON REQUEST FOR
Patent Number	: 7569245	: RECALCULATION of PATENT
Issue Date	: 08/04/2009	: TERM ADJUSTMENT IN VIEW
Appliction No	: 10/855,028	: OF WYETH AND NOTICE OF INTENT TO
Filed	: 05/26/2004	: ISSUE CERTIFICATE OF CORRECTION
		:

The Request for Recalculation is **GRANTED** to the extent indicated.

The patent term adjustment has been determined to be **1878** days. The USPTO will *sua sponte* issue a certificate of correction reflecting the amount of PTA days determined by the recalculation.

Prior to the issuance of the certificate of correction, the USPTO will afford patentee an opportunity to be heard and request reconsideration. Accordingly, patentee has **one month or thirty (30) days**, whichever is longer, to file a request for reconsideration of this patent term adjustment calculation. See 35 U.S.C. 154(b)(3)(B)(ii) and 37 CFR 1.322(a)(4). No extensions of time will be granted under 37 CFR 1.136.

Patentee should use document code PET.OP if electronically filing a request for reconsideration of this patent term adjustment calculation. The patentee must also include the information required by 37 CFR 1.705(b)(2) and the fee required by 37 CFR 1.18(e). If patentee does not file a timely request for reconsideration of this patent term adjustment calculation including the information required by 37 CFR 1.705(b)(2) and the fee required by 37 CFR 1.18(e), the USPTO will issue a certificate of correction reflecting the PTA determination noted above.

Patentee should be aware that in order to preserve the right to review in the United States District Court for the District of Columbia of the USPTO patent term adjustment determination, patentee must ensure that he or she also take the steps required under 35 U.S.C. 154(b)(4)(A) in a timely manner. Nothing in the request for recalculation should be construed as providing an alternative time frame for commencing a civil action under 35 U.S.C. 154(b)(4)(A).

Any questions concerning this decision should be directed to the Office of Patent Legal Administration at 571-272-7702.

UNITED STATES PATENT AND TRADEMARK OFFICE

Commissioner for Patents
United States Patent and Trademark Office
P. O. Box 1450
Alexandria, VA 22313-1450
www.uspto.gov

ARTZ & ARTZ, P.C.
28333 TELEGRAPH RD.
SUITE 250
SOUTHFIELD, MI 48034

COPY MAILED

JUN 2 9 2005

OFFICE OF PETITIONS

In re Application of	:	
David L. Killion et al	:	
Application No. 10/855,051	:	ON PETITION
Filed: May 27, 2004	:	
Attorney Docket No. DLK 0101 PUS	:	

This is a decision on the petition under 37 CFR 1.137(b), filed May 31, 2005, to revive the above-identified application.

The petition is **GRANTED**.

The above-identified application became abandoned for failure to reply in a timely manner to the Notice to File Missing Parts of Nonprovisional Application (Notice) mailed July 23, 2004. The Notice set a period for reply of two (2) months from the mail date of the Notice. No extensions of time under the provisions of 37 CFR 1.136(a) were obtained. Accordingly, the above-identified application became abandoned on September 24, 2004.

Telephone inquiries concerning this decision should be directed to Irvin Dingle at (571) 272-3210.

This matter is being referred to the Initial Patent Examination Unit.

Irvin Dingle
Petitions Examiner
Office of Petitions
Office of the Deputy Commissioner
for Patent Examination Policy

UNITED STATES PATENT AND TRADEMARK OFFICE

Commissioner for Patents
United States Patent and Trademark Office
P.O. Box 1450
Alexandria, VA 22313-1450
www.uspto.gov

DICKINSON WRIGHT PLLC
38525 WOODWARD AVENUE
SUITE 2000
BLOOMFIELD HILLS MI 48304-2970

COPY MAILED

MAR 2 5 2008

OFFICE OF PETITIONS

In re Application of
Killion et al.
Application No. 10/855,051
Filed: May 27, 2004
Title: Mountain Cloudwater

ON PETITION

This is a decision on the petition, filed January 7, 2008, which is being treated as a petition under 37 CFR 1.181 (no fee) requesting withdrawal of the holding of abandonment in the above-identified application.

The petition to withdraw the holding of abandonment is **DISMISSED**.

Any request for reconsideration of this decision should be filed within two (2) months from the mail date of this decision. *Note* 37 CFR 1.181(f). The request for reconsideration should include a cover letter and be entitled as a "Renewed Petition under 37 CFR 1.181 to Withdraw the Holding of Abandonment."

This application became abandoned for failure to timely submit the issue and publication fees, as required by the Notice of Allowance and Fee (s) Due which was mailed August 1, 2007. The Notice of Allowance and Fee (s) Due set a three (3) month statutory period for reply. Extensions of time were not available under the provisions of 37 CFR 1.136(a). Accordingly, this application became abandoned on November 2, 2007. A Notice of Abandonment was mailed on November 29, 2007.

Petitioner argues the Notice of Allowance and Fee(s) Due was never received. Petitioner has provided a statement attesting that the files have been checked and provided a copy of a docket report. Petitioner states that the Notice of Allowance and Fee(s) Due was mailed to an incorrect address (Venice, California).

Petitioner's argument has been considered but deemed unpersuasive. A review of the record shows, the Notice of Allowance and Notice of Allowability were mailed to the correspondence address of record. A change of correspondence address was submitted on July 23, 2007 requesting that the address for the above-identified application be associated with customer number 58592. The address associated with customer number 58592 is that of the Venice, California address.

Further review shows that a request to change the correspondence address of record was submitted on August 3, 2007, two days after the mailing of the Notice of Allowance and Notice of Allowability. The request made on August 3, 2007 asked that customer number 59582 (Bloomfield Hills, Michigan) be associated with the current application. It appears petitioner inadvertently included the incorrect customer number in the first request to change the correspondence address filed on July 23, 2007. The request submitted on August 3, 2007 was filed after the mailing of the Notice of Allowance. Thus, the Notice was properly mailed to the correspondence address of record.

Petitioner's argument has been considered, but deemed unpersuasive. The failure to receive the Notice of Allowance and Fee(s) Due was not due to Office error or an irregularity in the mail. Petitioner failed to properly change the correspondence address of record with the Office. Where an application becomes abandoned as a consequence of a change of correspondence address (the Office action being mailed to the old, uncorrected address and failing to reach the applicant in sufficient time to permit a timely reply) an adequate showing of "unavoidable" delay will require a showing that due care was taken to adhere to the requirement for prompt notification in each concerned application of the change of address (see MPEP § 601.03), and must include an adequate showing that a timely notification of the change of address was filed in the application concerned, and in a manner reasonably calculated to call attention to the fact that it was a notification of a change of address. The lack of notification, or belated notification, to the U.S. Patent and Trademark Office of the change in correspondence address does not constitute unavoidable delay. See MPEP 711.03(c). Nor would the failure to promptly change the correspondence allow for withdrawing the holding of abandonment.

Alternative Venue

Petitioner May wish to file a petition under 37 CFR 1.137(b).

The filing of a petition under 37 CFR 1.137(b) cannot be intentionally delayed and therefore must be filed promptly. A person seeking revival due to unintentional delay cannot make a statement that the delay was unintentional unless the entire delay,

including the date it was discovered that the application was abandoned until the filing of the petition to revive under 37 CFR 1.137(b), was unintentional. A statement that the delay was unintentional is not appropriate if petitioner intentionally delayed the filing of a petition for revival under 37 CFR 1.137(b).

Further correspondence with respect to this matter should be addressed as follows:

By Mail: Mail Stop PETITION
Commissioner for Patents
P. O. Box 1450
Alexandria, VA 22313-1450

By hand: U. S. Patent and Trademark Office
Customer Service Window, Mail Stop Petitions
Randolph Building
401 Dulany Street
Alexandria, VA 22314

By facsimile: (571) 273-8300

Telephone inquiries concerning this matter should be directed to the undersigned at (571) 272-3215.

Charlema R. Grant

Charlema R. Grant
Petitions Attorney
Office of Petitions

UNITED STATES PATENT AND TRADEMARK OFFICE

Commissioner for Patents
United States Patent and Trademark Office
P.O. Box 1450
Alexandria, VA 22313-1450
www.uspto.gov

DICKINSON WRIGHT PLLC
38525 WOODWARD AVENUE
SUITE 2000
BLOOMFIELD HILLS MI 48304-2970

COPY MAILED

JUN 09 2008

OFFICE OF PETITIONS

In re Application of :
Killion et al. :
Application No. 10/855,051 : DECISION ON PETITION
Filed: May 27, 2004 :
Attorney Docket No. 36454-00002 (DLK 0101 PUS) :

This is a decision on the petition under the unintentional provisions of 37 CFR 1.137(b), filed April 29, 2008, to revive the above-identified application.

The petition is **GRANTED**.

This application became abandoned for failure to timely pay the issue and publication fees on or before November 1, 2007, as required by the Notice of Allowance and Fee(s) Due, mailed August 1, 2007. Accordingly, the date of abandonment of this application is November 2, 2007.

The petition satisfies the requirements of 37 CFR 1.137(b) in that petitioner has supplied (1) the reply in the form of payment of the issue fee of $720 and the publication fee of $300, (2) the petition fee of $770; and (3) a proper statement of unintentional delay.

This application is being referred to the Office of Data Management for processing into a patent.

Telephone inquiries concerning this decision should be directed to the undersigned at (571) 272-3215.

Charlema Grant
Petitions Attorney
Office of Petitions

SPE RESPONSE FOR CERTIFICATE OF CORRECTION

DATE 2/25/09

Paper No.: —

TO SPE OF : ART UNIT 1797

SUBJECT : Request for Certificate of Correction for Appl. No.: 10/855051 Patent No.: 7404837 B2

Please respond to this request for a certificate of correction within 7 days.

FOR IFW FILES:

Please review the requested changes/corrections as shown in the COCIN document(s) in the IFW application image. No new matter should be introduced, nor should the scope or meaning of the claims be changed.

Please complete the response (see below) and forward the completed response to scanning using document code **COCX**.

FOR PAPER FILES:

Please review the requested changes/corrections as shown in the attached certificate of correction. Please complete this form (see below) and forward it with the file to:

Certificates of Correction Branch (CofC)
South Tower - 9A22
Palm Location 7580

Virginia Tolbert
Certificates of Correction Branch
703-308-9390 ext. 113

Thank You For Your Assistance

The request for issuing the above-identified correction(s) is hereby:
Note your decision on the appropriate box.

- [X] **Approved** — All changes apply.
- [ ] **Approved in Part** — Specify below which changes do not apply.
- [ ] **Denied** — State the reasons for denial below.

Comments: OK to enter

DUANE SMITH
SUPERVISORY PATENT EXAMINER

SPE

1797
Art Unit

PTOL-306 (REV. 7/03)

U.S. DEPARTMENT OF COMMERCE Patent and Trademark Office

UNITED STATES PATENT AND TRADEMARK OFFICE

Commissioner for Patents
United States Patent and Trademark Office
P.O. Box 1450
Alexandria, VA 22313-1450
www.uspto.gov

SCHWEGMAN, LUNDBERG, WOESSNER & KLUTH, P.A.
P.O. BOX 2938
MINNEAPOLIS, MN 55402

COPY MAILED
MAY 0 9 2006
OFFICE OF PETITIONS

In re Application of Buynak et al. :
Application No. 10/855,053 : Decision on Petition
Filing Date: May 27, 2004 :
Attorney Docket No. 2280.037US4 :

This is a decision on the petition under 37 CFR 1.137(b), filed February 2, 2006, to revive the above-identified application.

The petition is **granted**.

This application became abandoned for failure to timely reply within three months to the non-final Office action mailed April 18, 2005. An extension of time under the provisions of 37 CFR 1.136(a) was not obtained. Accordingly, this application became abandoned on July 19, 2005. A Notice of Abandonment was mailed on January 3, 2006.

The instant petition requests revival of the application.

Petitioner has met the requirements to revive the above-identified application pursuant to 37 CFR 1.137(b). Therefore, the petition is granted and the application is revived.

Payment for an extension of time is unnecessary when one files a petition to revive an application. Therefore, the $510 extension of time fee will be credited back to petitioner's deposit account.

Technology Center Art Unit 1624 will be informed of the instant decision and the application will be further examined in due course.

Telephone inquiries regarding this communication should be directed to Petitions Attorney Steven Brantley at (571) 272-3203.

Charles Steven Brantley
Senior Petitions Attorney
Office of Petitions

UNITED STATES PATENT AND TRADEMARK OFFICE

Commissioner for Patents
United States Patent and Trademark Office
P.O. Box 1450
Alexandria, VA 22313-1450
www.uspto.gov

COPY MAILED

SEP 1 2 2005

OFFICE OF PETITIONS

BUCKLEY, MASCHOFF, TALWALKAR
5 ELM STREET
NEW CANAAN CT 06840

In re Application of	:	
Tod A. Byquist	:	
Application No. 10/855,054	:	ON PETITION
Filed: May 27, 2004	:	
Attorney Docket No. P18541	:	

This is a decision on the petition, filed September 2, 2005, under 37 CFR 1.313(c)(2) to withdraw the above-identified application from issue after payment of the issue fee.

The petition is **GRANTED**.

The above-identified application is withdrawn from issue for consideration of a submission under 37 CFR 1.114 (request for continued examination). See 37 CFR 1.313(c)(2).

Petitioner is advised that the issue fee paid on May 23, 2005 in the above-identified application cannot be refunded. If, however, the above-identified application is again allowed, petitioner may request that it be applied towards the issue fee required by the new Notice of Allowance.[1]

Telephone inquiries should be directed to the undersigned at (571) 272-3208.

The examiner of Technology Center AU 2833 will consider the request for continued examination under 37 CFR 1.114.

Karen Creasy

Karen Creasy
Petitions Examiner
Office of Petitions
Office of the Deputy Commissioner
for Patent Examination Policy

---

[1] The request to apply the issue fee to the new Notice may be satisfied by completing and returning the new Issue Fee Transmittal Form PTOL-85(b), which includes the following language thereon: "Commissioner for Patents is requested to apply the Issue Fee and Publication Fee (if any) or re-apply any previously paid issue fee to the application identified above." Petitioner is advised that, whether a fee is indicated as being due or not, the Issue Fee Transmittal Form **must** be completed and timely submitted to avoid abandonment. Note the language in bold text on the first page of the Notice of Allowance and Fee(s) Due (PTOL-85).

SPE RESPONSE FOR CERTIFICATE OF CORRECTION

DATE : 6/28/10 **Paper No.:** —

TO SPE OF : ART UNIT 2189

SUBJECT : Request for Certificate of Correction for Appl. No.: 10/855065 Patent No.: 7210014 B2

Please respond to this request for a certificate of correction within 7 days.

FOR IFW FILES:

Please review the requested changes/corrections as shown in the **COCIN** document(s) in the IFW application image. No new matter should be introduced, nor should the scope or meaning of the claims be changed.

Please complete the response (see below) and forward the completed response to scanning using document code **COCX**.

FOR PAPER FILES:

Please review the requested changes/corrections as shown in the attached certificate of correction. Please complete this form (see below) and forward it with the file to:

Certificates of Correction Branch (CofC)
Randolph Square – 9D10-A
Palm Location 7580

Virginia Tolbert
Certificates of Correction Branch
571-272-0460

Thank You For Your Assistance

The request for issuing the above-identified correction(s) is hereby:
Note your decision on the appropriate box.

- [X] **Approved** — **All** changes apply.
- [ ] **Approved in Part** — Specify below which changes **do not** apply.
- [ ] **Denied** — State the reasons for denial below.

Comments: _____

/Reginald G. Bragdon/ SPE, AU 2189

UNITED STATES PATENT AND TRADEMARK OFFICE

Commissioner for Patents
United States Patent and Trademark Office
P.O. Box 1450
Alexandria, VA 22313-1450
www.uspto.gov

Rashida A. Karmali
13th Floor
99 Wall Street
New York, NY 10005

MAILED

SEP 30 2009

OFFICE OF PETITIONS

In re Application of
Ellen Chen, et. al.
Application No. 10/855,073
Filed: May 27, 2004
Attorney Docket No. 170.003

ON PETITION

This is a decision on the petition under 37 CFR 1.137(b), filed October 15, 2008, to revive the above-identified application. The delay in responding is regretted.

The application became abandoned for failure to file a proper reply to the final Office action mailed May 9, 2007. A Notice of Abandonment was mailed November 21, 2007.

The petition is **dismissed**.

A grantable petition under 37 CFR 1.137(b) must be accompanied by: (1) the required reply, unless previously filed; (2) the petition fee as set forth in 37 CFR 1.17(m); (3) a statement that the entire delay in filing the required reply from the due date for the reply until the filing of a grantable petition pursuant to 37 CFR 1.137(b) was unintentional; and (4) any terminal disclaimer (and fee as set forth in 37 CFR 1.20(d)) required by 37 CFR 1.137(d). The instant petition lacks item(s) (1).

Where there is a question as to whether either the abandonment or the delay in filing a petition under 37 CFR 1.137 was unintentional, the Commissioner may require additional information. See MPEP 711.03(c)(III)(C) and (D).

A review of the record fails to disclose a response to the final Office action mailed May 9, 2007. Therefore revival of the instant application cannot occur until a proper reply has been received.

The proposed reply required for consideration of a petition to revive must be a Notice of Appeal (and appeal fee required by 37 CFR 41.20(b)(2), an amendment that *prima facie* places the application in condition for allowance, a Request for Continued Examination and submission (37 CFR 1.114), or the filing of a continuing application. See MPEP 711.03(c)(III)(A)(2).

Petitioner has appointed a representative to conduct all business before the U.S. Patent and Trademark Office (Office). The Office will not engage in dual correspondence with petitioner and petitioner's representative. Accordingly, petitioner must conduct all future correspondence with this Office through the representative of record. If petitioner no longer wishes to be represented by the representative of record, then a revocation of the power of attorney or patent agent should be submitted. A correspondence address must be included on the correspondence instructing the Office where all future communications are to be mailed. *See* 37 CFR 1.33(a).

Any request for reconsideration of this decision must be submitted within **TWO (2) MONTHS** from the mail date of this decision. Extensions of time under 37 CFR 1.136(a) is permitted. The reconsideration request should include a cover letter entitled "Renewed Petition under 37 CFR 1.137(b)." This is **not** a final agency action within the meaning of 5 U.S.C. § 704.

Further correspondence with respect to this matter should be addressed as follows:

By mail: Mail Stop PETITION
Commissioner for Patents
P. O. Box 1450
Alexandria, VA 22313-1450

By hand: U. S. Patent and Trademark Office
Customer Service Window, Mail Stop Petitions
Randolph Building
401 Dulany Street
Alexandria, VA 22314

The centralized facsimile number is (571) 273-8300.

A courtesy copy of this decision is being mailed to the address given on the petition. Thereafter, all future correspondence will be mailed solely to the address of record until otherwise instructed.

Telephone inquiries concerning this decision should be directed to the undersigned at (571) 272-3226.

Andrea Smith
Petitions Examiner
Office of Petitions

cc: Ellen Chen/Wei He
348 Mark Tree Road
South Setauket, NY 11720

UNITED STATES PATENT AND TRADEMARK OFFICE

Commissioner for Patents
United States Patent and Trademark Office
P.O. Box 1450
Alexandria, VA 22313-1450
www.uspto.gov

Ellen Chen
25 Health Sciences Drive
Suite 106
Stony Brook, NY 11790

COPY MAILED

DEC 17 2009

OFFICE OF PETITIONS

In re Application of
Ellen Chen, et. al.
Application No. 10/855,073
Filed: May 27, 2004
Attorney Docket No. 170.003

ON PETITION

This is a decision on the renewed petition under 37 CFR 1.137(b), filed November 27, 2009, to revive the above-identified application.

In response to the decision mailed September 30, 2009, petitioner submits the present renewed petition.

The petition is again **dismissed**.

A grantable petition under 37 CFR 1.137(b) must be accompanied by: (1) the required reply, unless previously filed; (2) the petition fee as set forth in 37 CFR 1.17(m); (3) a statement that the entire delay in filing the required reply from the due date for the reply until the filing of a grantable petition pursuant to 37 CFR 1.137(b) was unintentional[1]; and (4) any terminal disclaimer (and fee as set forth in 37 CFR 1.20(d)) required by 37 CFR 1.137(d). The instant petition lacks item(s) (1).

The Office acknowledges receipt of $255, for some unknown payment, received on November 27, 2009[2] and $810 for payment of the petition fee received on October 15, 2008. However, a final Office action was mailed May 9, 2007, which required petitioner to file a proper response to continue prosecution in the above application. To date, no response has been received. Therefore revival of the instant application cannot occur until a proper reply has been received[3]. A courtesy copy of the Office action is enclosed for petitioner's convenience.

---

[1] Where there is a question as to whether either the abandonment or the delay in filing a petition under 37 CFR 1.137 was unintentional, the Commissioner may require additional information. See MPEP 711.03(c)(III)(C) and (D).

[2] Petitioner must inform the Office how to apply the $255 received on November 27, 2009. Otherwise, the fee will be credited back to petitioner's credit card.

[3] Petitioner should note that filing the required the missing item should not be construed as meaning that the petition will be granted under the provisions of 37 CFR 1.137(b).

Petitioner is reminded that the proposed reply required for consideration of a petition to revive must be a Notice of Appeal (and appeal fee required by 37 CFR 41.20(b)(2), an amendment that *prima facie* places the application in condition for allowance, a Request for Continued Examination and submission (37 CFR 1.114), or the filing of a continuing application. See MPEP 711.03(c)(III)(A)(2).

The Change of Correspondence Address filed November 27, 2009 has been accepted and made of record. Unfortunately, the attorney Rashida A. Karmali will remain of record until a proper revocation of power of attorney has been received. *See* enclosed Revocation of Power of Attorney form (PTO/SB/81).

Any request for reconsideration of this decision must be submitted within **TWO (2) MONTHS** from the mail date of this decision. Extensions of time under 37 CFR 1.136(a) is permitted. The reconsideration request should include a cover letter entitled "Renewed Petition under 37 CFR 1.137(b)." This is **not** a final agency action within the meaning of 5 U.S.C. § 704.

Further correspondence with respect to this matter should be addressed as follows:

By mail: Mail Stop PETITION
Commissioner for Patents
P. O. Box 1450
Alexandria, VA 22313-1450

By hand: U. S. Patent and Trademark Office
Customer Service Window, Mail Stop Petitions
Randolph Building
401 Dulany Street
Alexandria, VA 22314

The centralized facsimile number is (571) 273-8300.

Telephone inquiries concerning this decision should be directed to the undersigned at (571) 272-3226.

Andrea Smith
Petitions Examiner
Office of Petitions

Enclosures: Final Office action mailed May 9, 2007.
Privacy Act Statement
Revocation of Power of Attorney form PTO/SB/81

UNITED STATES PATENT AND TRADEMARK OFFICE

UNITED STATES DEPARTMENT OF COMMERCE
United States Patent and Trademark Office
Address: COMMISSIONER FOR PATENTS
P.O. Box 1450
Alexandria, Virginia 22313-1450
www.uspto.gov

APPLICATION NO.	FILING DATE	FIRST NAMED INVENTOR	ATTORNEY DOCKET NO.	CONFIRMATION NO.
10/855,073	05/27/2004	Ellen Chen	170.003	8137

7590 05/09/2007

Rashida A. Karmali
13th Floor
99 Wall Street
New York, NY 10005

EXAMINER
LEVKOVICH, NATALIA A

ART UNIT	PAPER NUMBER
1743	

MAIL DATE	DELIVERY MODE
05/09/2007	PAPER

Please find below and/or attached an Office communication concerning this application or proceeding.

The time period for reply, if any, is set in the attached communication.

Office Action Summary	Application No.	Applicant(s)
	10/855,073	CHEN ET AL.
	Examiner	Art Unit
	Natalia Levkovich	1743

-- The MAILING DATE of this communication appears on the cover sheet with the correspondence address --

Period for Reply

A SHORTENED STATUTORY PERIOD FOR REPLY IS SET TO EXPIRE 3 MONTH(S) OR THIRTY (30) DAYS, WHICHEVER IS LONGER, FROM THE MAILING DATE OF THIS COMMUNICATION.

- Extensions of time may be available under the provisions of 37 CFR 1.136(a). In no event, however, may a reply be timely filed after SIX (6) MONTHS from the mailing date of this communication.
- If NO period for reply is specified above, the maximum statutory period will apply and will expire SIX (6) MONTHS from the mailing date of this communication.
- Failure to reply within the set or extended period for reply will, by statute, cause the application to become ABANDONED (35 U.S.C. § 133). Any reply received by the Office later than three months after the mailing date of this communication, even if timely filed, may reduce any earned patent term adjustment. See 37 CFR 1.704(b).

Status

1)☒ Responsive to communication(s) filed on *13 October 2006*.

2a)☒ This action is **FINAL**. 2b)☐ This action is non-final.

3)☐ Since this application is in condition for allowance except for formal matters, prosecution as to the merits is closed in accordance with the practice under *Ex parte Quayle*, 1935 C.D. 11, 453 O.G. 213.

Disposition of Claims

4)☒ Claim(s) *1-20* is/are pending in the application.

4a) Of the above claim(s) *17-20* is/are withdrawn from consideration.

5)☐ Claim(s) _____ is/are allowed.

6)☒ Claim(s) *1-16* is/are rejected.

7)☐ Claim(s) _____ is/are objected to.

8)☒ Claim(s) *1-20* are subject to restriction and/or election requirement.

Application Papers

9)☐ The specification is objected to by the Examiner.

10)☒ The drawing(s) filed on _____ is/are: a)☐ accepted or b)☒ objected to by the Examiner.

Applicant may not request that any objection to the drawing(s) be held in abeyance. See 37 CFR 1.85(a).

Replacement drawing sheet(s) including the correction is required if the drawing(s) is objected to. See 37 CFR 1.121(d).

11)☐ The oath or declaration is objected to by the Examiner. Note the attached Office Action or form PTO-152.

Priority under 35 U.S.C. § 119

12)☐ Acknowledgment is made of a claim for foreign priority under 35 U.S.C. § 119(a)-(d) or (f).

a)☐ All b)☐ Some * c)☐ None of:

1.☐ Certified copies of the priority documents have been received.

2.☐ Certified copies of the priority documents have been received in Application No. _____.

3.☐ Copies of the certified copies of the priority documents have been received in this National Stage application from the International Bureau (PCT Rule 17.2(a)).

* See the attached detailed Office action for a list of the certified copies not received.

Attachment(s)

1) ☐ Notice of References Cited (PTO-892)

2) ☐ Notice of Draftsperson's Patent Drawing Review (PTO-948)

3) ☐ Information Disclosure Statement(s) (PTO/SB/08) Paper No(s)/Mail Date _____.

4) ☐ Interview Summary (PTO-413) Paper No(s)/Mail Date. _____.

5) ☐ Notice of Informal Patent Application

6) ☐ Other: _____.

DETAILED ACTION

Response to Amendment

1. Applicant's amendments and remarks dated 10/13/2006 have been acknowledged by the Examiner.

2. The text of those sections of Title 35, U.S. Code not included in this action can be found in a prior Office Action.

Drawings

3. The drawings remain objected to under 37 CFR 1.83(a). See the appropriate paragraphs of the 06/14/2006 Office Action.

Claim Rejections - 35 USC § 103

4. Claims 1 and 12 are rejected under 35 U.S.C. 103(a) as being unpatentable over Astle (US 5225164) in view of Kaufman et al. (US 3234107). See the appropriate paragraphs of the 06/14/2006 Office Action.

5. Claims 2-11 and 13-16 are rejected under 35 U.S.C. 103(a) as being unpatentable over Astle in view of Kaufman, and further in view of Lacey et al. (US 6943009).

See the appropriate paragraphs of the 06/14/2006 Office Action.

Response to Arguments

6. Applicant's arguments filed 10/13/2006 have been fully considered but they are not persuasive.

Applicant argues that the 'raised mouth surface' (recited in claim 13) is not required to be shown in the drawings since 'it is not an essential element. The Office maintains that, in accordance with 37 CFR 1.83(a), the drawings must show every feature of the invention specified in the claims. Therefore, the 'raised mouth surface' must be shown or the feature canceled from the claim.

While admitting that Astle does disclose a multi-well plate where the wells are arranged in 8 X 12 matrix, Applicant argues that the matrix of Astle 'does not permit transfer of liquid from the 96 well matrix to the 24 well matrix in any manner what so ever. The handler is forced to transfer each well at a time'. Examiner notes that claims 1 and 12 do not include the above-cited functional limitation.

Applicant argues that Lacey discloses 'different devices' being used 'to load liquids' into the plate. 'In contrast, in the present invention,...the same device may be used' for liquid transfer'. Examiner notes that the instant claims do not include this limitation.

Conclusion

7. **THIS ACTION IS MADE FINAL.** Applicant is reminded of the extension of time policy as set forth in 37 CFR 1.136(a).

A shortened statutory period for reply to this final action is set to expire THREE MONTHS from the mailing date of this action. In the event a first reply is filed within TWO MONTHS of the mailing date of this final action and the advisory action is not mailed until after the end of the THREE-MONTH shortened statutory period, then the shortened statutory period will expire on the date the advisory action is mailed, and any extension fee pursuant to 37 CFR 1.136(a) will be calculated from the mailing date of the advisory action. In no event, however, will the statutory period for reply expire later than SIX MONTHS from the mailing date of this final action.

8. Any inquiry concerning this communication or earlier communications from the examiner should be directed to Natalia Levkovich whose telephone number is 571-272-2462. The examiner can normally be reached on Mon-Fri, 8 a.m.-4p.m..

If attempts to reach the examiner by telephone are unsuccessful, the examiner's supervisor, Jill Warden can be reached on 571-272-1267. The fax phone number for the organization where this application or proceeding is assigned is 571-273-8300.

Information regarding the status of an application may be obtained from the Patent Application Information Retrieval (PAIR) system. Status information for published applications may be obtained from either Private PAIR or Public PAIR. Status information for unpublished applications is available through Private PAIR only. For more information about the PAIR system, see http://pair-direct.uspto.gov. Should you have questions on access to the Private PAIR system, contact the Electronic Business Center (EBC) at 866-217-9197 (toll-free).

Jill Warden
Supervisory Patent Examiner
Technology Center 1700

Privacy Act Statement

The Privacy Act of 1974 (P.L. 93-579) requires that you be given certain information in connection with your submission of the attached form related to a patent application or patent. Accordingly, pursuant to the requirements of the Act, please be advised that: (1) the general authority for the collection of this information is 35 U.S.C. 2(b)(2); (2) furnishing of the information solicited is voluntary; and (3) the principal purpose for which the information is used by the U.S. Patent and Trademark Office is to process and/or examine your submission related to a patent application or patent. If you do not furnish the requested information, the U.S. Patent and Trademark Office may not be able to process and/or examine your submission, which may result in termination of proceedings or abandonment of the application or expiration of the patent.

The information provided by you in this form will be subject to the following routine uses:

1. The information on this form will be treated confidentially to the extent allowed under the Freedom of Information Act (5 U.S.C. 552) and the Privacy Act (5 U.S.C 552a). Records from this system of records may be disclosed to the Department of Justice to determine whether disclosure of these records is required by the Freedom of Information Act.
2. A record from this system of records may be disclosed, as a routine use, in the course of presenting evidence to a court, magistrate, or administrative tribunal, including disclosures to opposing counsel in the course of settlement negotiations.
3. A record in this system of records may be disclosed, as a routine use, to a Member of Congress submitting a request involving an individual, to whom the record pertains, when the individual has requested assistance from the Member with respect to the subject matter of the record.
4. A record in this system of records may be disclosed, as a routine use, to a contractor of the Agency having need for the information in order to perform a contract. Recipients of information shall be required to comply with the requirements of the Privacy Act of 1974, as amended, pursuant to 5 U.S.C. 552a(m).
5. A record related to an International Application filed under the Patent Cooperation Treaty in this system of records may be disclosed, as a routine use, to the International Bureau of the World Intellectual Property Organization, pursuant to the Patent Cooperation Treaty.
6. A record in this system of records may be disclosed, as a routine use, to another federal agency for purposes of National Security review (35 U.S.C. 181) and for review pursuant to the Atomic Energy Act (42 U.S.C. 218(c)).
7. A record from this system of records may be disclosed, as a routine use, to the Administrator, General Services, or his/her designee, during an inspection of records conducted by GSA as part of that agency's responsibility to recommend improvements in records management practices and programs, under authority of 44 U.S.C. 2904 and 2906. Such disclosure shall be made in accordance with the GSA regulations governing inspection of records for this purpose, and any other relevant (i.e., GSA or Commerce) directive. Such disclosure shall not be used to make determinations about individuals.
8. A record from this system of records may be disclosed, as a routine use, to the public after either publication of the application pursuant to 35 U.S.C. 122(b) or issuance of a patent pursuant to 35 U.S.C. 151. Further, a record may be disclosed, subject to the limitations of 37 CFR 1.14, as a routine use, to the public if the record was filed in an application which became abandoned or in which the proceedings were terminated and which application is referenced by either a published application, an application open to public inspection or an issued patent.
9. A record from this system of records may be disclosed, as a routine use, to a Federal, State, or local law enforcement agency, if the USPTO becomes aware of a violation or potential violation of law or regulation.

UNITED STATES PATENT AND TRADEMARK OFFICE

Commissioner for Patents
United States Patent and Trademark Office
P.O. Box 1450
Alexandria, VA 22313-1450
www.uspto.gov

JENKINS, WILSON, TAYLOR & HUNT, P. A.
SUITE 1200 UNIVERSITY TOWER
3100 TOWER BLVD.,
DURHAM NC 27707

COPY MAILED
SEP 15 2008

In re Application of	:	
LeCluyse et al.	:	
Application No. 10/855,085	:	ON PETITION
Filed: May 27, 2004	:	
Attorney Docket No. 421/17/2/3	:	

This is a decision on the petition under 37 C.F.R. § 1.137(b), filed September 2, 2008, to revive the above-identified application.

The petition is **GRANTED**.

The petition satisfies the requirements of 37 CFR 1.137(b) in that petitioner has supplied (1) the reply in the form of a Request for Continued Examination (RCE) and an Amendment, (2) the petition fee, and (3) a proper statement of unintentional delay.

Telephone inquiries concerning this decision should be directed to the undersigned at (571) 272-3206.

This matter is being referred to Technology Center 1600 for processing of the Request for Continued Examination under 37 CFR 1.114 filed with the instant petition.

Liana Walsh
Petitions Examiner
Office of Petitions

UNITED STATES PATENT AND TRADEMARK OFFICE

Commissioner for Patents
United States Patent and Trademark Office
P.O. Box 1450
Alexandria, VA 22313-1450
www.uspto.gov

COPY MAILED

SEP 19 2007

OFFICE OF PETITIONS

DAVID TOREN, ESQ.
ABELMAN FRAYNE & SCHWAB
666 THIRD AVENUE
NEW YORK NY 10017-5621

In re Application of	:	
Christian Hefele et al.	:	
Application No. 10/855,092	:	ON PETITION
Filed: May 27, 2004	:	
Attorney Docket No. DT-6805	:	

This is a decision on the petition under the unintentional provisions of 37 CFR 1.137(b), filed October 13 & December 6, 2006, to revive the above-identified application.

The petition is **GRANTED**.

The application became abandoned for failure to timely file a reply within the meaning of 37 CFR 1.113 to the final Office action of December 28, 2005. The proposed reply required for consideration of a petition to revive must be a Notice of Appeal (and appeal fee required by 37 CFR 41.20(b)(2), an amendment that *prima facie* places the application in condition for allowance, a Request for Continued Examination and submission (37 CFR 1.114), or the filing of a continuing application under 37 CFR 1.53(b). See MPEP 711.03(c)(III)(A)(2). No extensions of time pursuant to the provisions of 37 CFR 1.136(a) was obtained. Accordingly, the date of abandonment of this application is March 29, 2006. The Notice of Abandonment was mailed September 22, 2006.

The petition satisfies the requirements of 37 CFR 1.137(b) in that petitioner has supplied (1) the reply in the form of a Request for Continued Examination (RCE), amendment and fee of $790, and the submission required by 37 CFR 1.114; (2) the petition fee of $1500; and (3) a proper statement of unintentional delay.

Telephone inquiries concerning this decision should be directed to Terri Williams at (571) 272-2991.

This application is being referred to Technology Center AU 3679 for processing of the RCE and for appropriate action by the Examiner in the normal course of business on the amendment submitted in accordance with 37 CFR 1.114.

Liana Walsh
Petitions Examiner
Office of Petitions

UNITED STATES PATENT AND TRADEMARK OFFICE

Commissioner for Patents
United States Patent and Trademark Office
P.O. Box 1450
Alexandria, VA 22313-1450
www.uspto.gov

Bea Koempel-Thomas
Lee & Hayes, PLLC
601 W. Riverside Avenue
Suite 1400
Spokane WA 99201

In re Application of:
Douceur, et al.
Application No. 10/855,112
Filed: May 26, 2004
For: Encryption systems and Methods for Identifying and Coalescing Identical Objects Encrypted with Different Keys

DECISION TO WITHDRAW HOLDING OF ABANDONMENT

This is a decision to withdraw the holding of abandonment of the above-identified application mailed on November 10, 2009.

On June 24, 2009, the Board of Appeals and Interferences rendered a decision in this application which reversed the examiner on an art rejection of claims 1-4 and affirmed the examiner on an obvious double patenting rejection of claim 5.

On October 20, 2009, a notice of abandonment was mailed based upon applicant's failure to file a response to the board decision as no claims are allowed.

Petitioner is asking for the notice of abandonment be withdrawn as claims 1-4 having been reversed are allowable and per MPEP 1214.06, the when some of the claims are allowable after a board decision the examiner has the duty to take up the application for action.

A review of the MPEP 1214.06 and the file indicates that the application should not have been abandoned and should have been taken up for further action by the examiner.

For the above stated reasons, the Notice of Abandonment mailed on October 20, 2009 is hereby withdrawn. The application file is being forwarded to an examiner to issue an appropriate office action.

Tod Swann
Workgroup Quality Assurance Specialist
Technology Center 2400
571-272-3612

UNITED STATES PATENT AND TRADEMARK OFFICE

Commissioner for Patents
United States Patent and Trademark Office
P.O. Box 1450
Alexandria, VA 22313-1450
www.uspto.gov

KENYON & KENYON
ONE BROADWAY
NEW YORK, NY 10004

COPY MAILED

NOV 1 4 2005

OFFICE OF PETITIONS

In re Application of :
Emilio Ambasz :
Application No. 10/855,116 :
Filed: May 26, 2004 :
Attorney Docket No. 12939/1 :

ON PETITION

This is a decision on the petition under 37 CFR 1.313(c)(2), filed November 10, 2005, to withdraw the above-identified application from issue after payment of the issue fee.

The petition is **GRANTED**.

The above-identified application is withdrawn from issue for consideration of a submission under 37 CFR 1.114 (request for continued examination). See 37 CFR 1.313(c)(2).

Petitioner is advised that the issue fee paid on June 30, 2005 in the above-identified application cannot be refunded. If, however, the above-identified application is again allowed, petitioner may request that it be applied towards the issue fee required by the new Notice of Allowance.[1]

Telephone inquiries should be directed to Wan Laymon at (571) 272-3220.

This matter is being referred to Technology Center AU 3636 for processing of the request for continued examination under 37 CFR 1.114 and for consideration of the concurrently filed IDS.

Wan Laymon

Wan Laymon
Petitions Examiner
Office of Petitions

[1] The request to apply the issue fee to the new Notice may be satisfied by completing and returning the new Issue Fee Transmittal Form PTOL-85(b), which includes the following language thereon: "Commissioner for Patents is requested to apply the Issue Fee and Publication Fee (if any) or re-apply any previously paid issue fee to the application identified above." Petitioner is advised that, whether a fee is indicated as being due or not, the Issue Fee Transmittal Form **must** be completed and timely submitted to avoid abandonment. Note the language in bold text on the first page of the Notice of Allowance and Fee(s) Due (PTOL-85).

UNITED STATES PATENT AND TRADEMARK OFFICE

COMMISSIONER FOR PATENTS
UNITED STATES PATENT AND TRADEMARK OFFICE
P.O. BOX 1450
ALEXANDRIA, VA 22313-1450
www.uspto.gov

EDWARD P. DUTKIEWICZ, ESQ.
EDWARD P. DUTKEIWICZ, P.A.
640 DOUGLAS AVENUE
DUNEDIN, FL 34698-7001

COPY MAILED

APR 06 2005

OFFICE OF PETITIONS

In re Application of	:	
Robert Yoho	:	
Application No. 10/855,151	:	DECISION
Filed: September 21, 2004	:	ON PETITION
Title: ENVIRONMENTAL AIR	:	
TREATMENT SYSTEM	:	

This is a decision on the PETITION UNDER 37 CFR 1.182, filed September 21, 2004, requesting that the later filing date of the date of this submission be accorded to the instant application originally filed May 26, 2004. Alternatively, applicant requests that consideration be given to retaining the original filing date of the initial mailing inasmuch as the technical data submitted herewith is essentially the same as that disclosed in a printed publication predating the original filing date of the subject application.

Application papers in the above-identified application were deposited on May 26, 2004. However, on July 23, 2004, the Office of Initial Patent Examination mailed applicant a "Notice of Omitted Items in a Nonprovisional Application." Applicant was thereby advised that the application had been accorded a filing date; however, FIG. 20 described in the specification appeared to have been omitted from the application. In response, applicant filed the instant petition (and fee).

Petitioner acknowledges that figure 20 was not among the papers present in the application on filing. Papers not shown to have been present in the application on filing cannot be a part of the original application disclosure. Petitioner's argument that the application is entitled to a filing date of May 26, 2004 with figure 20 considered part of the original application

disclosure based on the technical data disclosed in a printed publication predating the original filing date of the subject application is not persuasive. The printed publication was not among the papers filed on May 26, 2004. Furthermore, the application did not include an incorporation by reference of the printed publication into the specification deposited on May 26, 2004.

Accordingly, the petition is DISMISSED to the extent that petitioner requests a filing date based on disclosure of the omitted figure in a printed publication.

However, with the petition, applicant supplied the missing figure; along with an amendment, amending the application to include the drawing figure; and a supplemental declaration referring to the amendment.

The petition to accord the application a filing date as of the date of submission of the figure is **GRANTED**.

The application is being returned to the Office of Initial Patent Examination for further processing with **a filing date of September 21, 2004**, using the application papers deposited on May 26, 2004 and the 1 sheet of drawings, containing figures 20A and 20B, supplied on September 21, 2004.

Telephone inquiries related to this decision should be directed to the undersigned at (571) 272-3219.

Nancy Johnson
Senior Petitions Attorney
Office of Petitions

UNITED STATES PATENT AND TRADEMARK OFFICE

Commissioner for Patents
United States Patent and Trademark Office
P.O. Box 1450
Alexandria, VA 22313-1450
www.uspto.gov

INSKEEP INTELLECTUAL PROPERTY GROUP, INC.
2281 W 180TH STREET
SUITE 200
TORRANCE CA 90504

MAILED

JUL 20 2010

OFFICE OF PETITIONS

In re Application of	:	
Donald E. Bobo Sr., et al	:	
Application No. 10/855,159	:	DECISION ON PETITION
Filed: May 26, 2004	:	
Attorney Docket No. 20439-18	:	

This is a decision on the petition under the unintentional provisions of 37 CFR 1.137(b), filed April 27, 2010, to revive the above-identified application.

The petition is **GRANTED**.

The petition satisfies the conditions for revival pursuant to the provisions of 37 CFR 1.137(b) in that (1) the reply in the form of the issue and publication fees; (2) the petition fee; and (3) the required statement of unintentional delay have been received. Accordingly, the reply to the Notice of Allowance mailed January 13, 2010, is accepted as having been unintentionally delayed.

Telephone inquiries concerning this decision should be directed to the undersigned at (571) 272-3208.

This application is being referred to the Office of Data Management to be processed into a patent.

/KOC/
Karen Creasy
Petitions Examiner
Office of Petitions

UNITED STATES PATENT AND TRADEMARK OFFICE

Commissioner for Patents
United States Patent and Trademark Office
P.O. Box 1450
Alexandria, VA 22313-1450
www.uspto.gov

MAY 24 2006

MCKEE, VOORHEES & SEASE, P.L.C.
ATTN: PIONEER HI-BRED
801 GRAND AVENUE, SUITE 3200
DES MOINES IA 50309-2721

In re Application of	:
Vladimir Puskaric	:
Serial No.: 10/855,168	: SUSPENSION OF ACTION
Filed: May 27, 2004	:
Attorney Docket No.: P06288US01	:

This is in reply to the petition under 37 CFR 1.103 to suspend action on this application at applicant's request for a period of six months, filed March 30, 2006.

A review of the file history shows that this is an unexamined application. Applicant requests that action on this application be suspended for six months in view of the fact that the claims in this case are substantially similar to claims in cases currently on appeal with the same Assignee.

§ 1.103 Suspension of action by the Office.

(a) Suspension for cause . On request of the applicant, the Office may grant a suspension of action by the Office under this paragraph for good and sufficient cause. The Office will not suspend action if a reply by applicant to an Office action is outstanding. Any petition for suspension of action under this paragraph must specify a period of suspension not exceeding six months. Any petition for suspension of action under this paragraph must also include:
(1) A showing of good and sufficient cause for suspension of action; and
(2) The fee set forth in § 1.17(g), unless such cause is the fault of the Office.

Applicant's petition requests suspension in view of the fact that the claims in this case are substantially similar to claims in cases currently on appeal with the same Assignee. No indication is given as to when these cases were filed, their status or approximate date of decision or resolution, nor how any decision would affect prosecution or patentability in this application. Also, in the instant case, no issues have as yet been developed and the issues ultimately developed may not be the same as those at the Board of Appeals. Further, it is not the general practice of the Office to suspend prosecution in unexamined applications except in extraordinary circumstances. None have been set forth in the petition. In summary, no showing of good or sufficient cause has been made.

In view of the above reason the petition is **DENIED**.

The application will be forwarded to the examiner for initial examination in turn.

Should there be any questions with respect to this action, please contact Marianne C. Seidel, by mail addressed to: Director, Technology Center 1600, P. O. BOX 1450, ALEXANDRIA, VA 22313-1450, or by telephone at 571-272-0584 or by facsimile transmission at the Office general facsimile number, 571-273-8300.

George C. Elliott

George Elliott
Director, Technology Center 1600

UNITED STATES PATENT AND TRADEMARK OFFICE

Commissioner for Patents
United States Patent and Trademark Office
P.O. Box 1450
Alexandria, VA 22313-1450
www.uspto.gov

MCKEE, VOORHEES & SEASE, P.L.C.
ATTN: PIONEER HI-BRED
801 GRAND AVENUE, SUITE 3200
DES MOINES, IA 50309-2721

COPY MAILED

MAY 29 2007

OFFICE OF PETITIONS

In re Application of :
Vladimir Puskaric :
Application No. 10/855,168 : ON PETITION
Filed: May 27, 2004 :
Attorney Docket No. P06288US01 :

This is in response to the petition under 37 CFR 1.182, filed May 1, 2007to withdraw a terminal disclaimer relative to U.S. Patent No. 6,232,535 filed January 11, 2007.

The petition is granted.

Examiner Ashwin Mehta determined that the terminal disclaimer filed January 11, 2006 as to U.S. Patent No 6,232,535, can be withdrawn. The terminal disclaimer is withdrawn, accordingly.

Petitioner is advised that the fee for petition under 37 CFR 1.182 is authorized under 37 CFR 1.17(f). The fee for the instant petition is, therefore, $400.00. Deposit account 26-0084 will be charged an additional $270.00, accordingly.

The application is being directed to Technology Center 1600, GAU 1638 for further processing including entry in the record of the withdrawal of the terminal disclaimer relative to U.S. patent No. 6,232,535 filed January 11, 2007.

Telephone inquiries concerning this decision may be directed to the undersigned at (571) 272-3222.

Kenya A. McLaughlin
Petitions Attorney
Office of Petitions

UNITED STATES PATENT AND TRADEMARK OFFICE

Commissioner for Patents
United States Patent and Trademark Office
P.O. Box 1450
Alexandria, VA 22313-1450
www.uspto.gov

MIRUS CORPORATION
505 SOUTH ROSA RD
MADISON WI 53719

COPY MAILED
AUG 21 2008

In re Application of	:	
James E. HAGSTROM et al.	:	
Application No. 10/855,175	:	DECISION ON PETITION
Filed: May 27, 2004	:	
Attorney Docket No. **Mirus.046.01**	:	

This is a decision on the petition under the unintentional provisions of 37 CFR 1.137(b), filed April 25, 2008, to revive the above-identified application.

The petition is **GRANTED**.

The application became abandoned for failure to reply in a timely manner to the non-final Office action, mailed October 03, 2007, which set a shortened statutory period for reply of one (1) month or thirty (30) days (whichever is later). No extensions of time under the provisions of 37 CFR 1.136(a) were obtained. Accordingly, the application became abandoned on November 04, 2007.

The petition satisfies the requirements of 37 CFR 1.137(b) in that petitioner has supplied (1) the reply in the form of an amendment, (2) the petition fee of $770, and (3) a proper statement of unintentional delay. Accordingly, the reply to the non-final Office Action of October 03, 2007 is accepted as having been unintentionally delayed.

Telephone inquiries concerning this decision should be directed to Tredelle Jackson at (571) 272-2783.

This application is being referred to Technology Center AU 1633 for appropriate action on the concurrently filed amendment.

Ramesh Krishnamurthy

Ramesh Krishnamurthy
Petitions Examiner
Office of Petitions

PTO/SB/64 (01-08)
Approved for use through 04/30/2008. OMB 0651-0031
U.S. Patent and Trademark Office; U.S. DEPARTMENT OF COMMERCE
Under the Paperwork Reduction Act of 1995, no persons are required to respond to a collection of information unless it displays a valid OMB control number.

PETITION FOR REVIVAL OF AN APPLICATION FOR PATENT ABANDONED UNINTENTIONALLY UNDER 37 CFR 1.137(b)

Docket Number (Optional) 46.01

First named inventor: James E. Hagstrom

Application No.: 10/855,175 Art Unit: 1633

Filed: 05/27/2004 Examiner: Kaushal, Sumesh

Title: Intravenous Administration of Polynucleotides for Delivery to Mammalian Cells In Vivo

Attention: Office of Petitions
Mail Stop Petition
Commissioner for Patents
P.O. Box 1450
Alexandria, VA 22313-1450
FAX (571) 273-8300

NOTE: If information or assistance is needed in completing this form, please contact Petitions Information at (571) 272-3282.

The above-identified application became abandoned for failure to file a timely and proper reply to a notice or action by the United States Patent and Trademark Office. The date of abandonment is the day after the expiration date of the period set for reply in the office notice or action plus an extensions of time actually obtained.

APPLICANT HEREBY PETITIONS FOR REVIVAL OF THIS APPLICATION

NOTE: A grantable petition requires the following items:
(1) Petition fee;
(2) Reply and/or issue fee;
(3) Terminal disclaimer with disclaimer fee - required for all utility and plant applications filed before June 8, 1995; and for all design applications; and
(4) Statement that the entire delay was unintentional.

1. Petition fee

☑ Small entity-fee $ 770.00 (37 CFR 1.17(m)). Applicant claims small entity status. See 37 CFR 1.27.

☐ Other than small entity – fee $ _____ (37 CFR 1.17(m))

2. Reply and/or fee

A. The reply and/or fee to the above-noted Office action in the form of an Amendment and Response (identify type of reply):

☐ has been filed previously on _____.
☑ is enclosed herewith.

B. The issue fee and publication fee (if applicable) of $ _____.

☐ has been paid previously on _____.
☐ is enclosed herewith.

This collection of information is required by 37 CFR 1.137(b). The information is required to obtain or retain a benefit by the public which is to file (and by the USPTO to process) an application. Confidentiality is governed by 35 U.S.C. 122 and 37 CFR 1.11 and 1.14. This collection is estimated to take 1.0 hour to complete, including gathering, preparing, and submitting the completed application form to the USPTO. Time will vary depending upon the individual case. Any comments on the amount of time you require to complete this form and/or suggestions for reducing this burden, should be sent to the Chief Information Officer, U.S. Patent and Trademark Office, U.S. Department of Commerce, P.O. Box 1450, Alexandria, VA 22313-1450. DO NOT SEND FEES OR COMPLETED FORMS TO THIS ADDRESS. **SEND TO: Mail Stop Petition, Commissioner for Patents, P.O. Box 1450, Alexandria, VA 22313-1450.**

If you need assistance in completing the form, call 1-800-PTO-9199 and select option 2.

Under the Paperwork Reduction Act of 1995, no persons are required to respond to a collection of information unless it displays a valid OMB control number.

3. Terminal disclaimer with disclaimer fee

☐ Since this utility/plant application was filed on or after June 8, 1995, no terminal disclaimer is required.

☐ A terminal disclaimer (and disclaimer fee (37 CFR 1.20(d)) of $ _____ for a small entity or $ _____ for other than a small entity) disclaiming the required period of time is enclosed herewith (see PTO/SB/63).

4. STATEMENT: The entire delay in filing the required reply from the due date for the required reply until the filing of a grantable petition under 37 CFR 1.137(b) was unintentional. [NOTE: The United States Patent and Trademark Office may require additional information if there is a question as to whether either the abandonment or the delay in filing a petition under 37 CFR 1.137(b) was unintentional (MPEP 711.03(c), subsections (III)(C) and (D)).]

WARNING:

Petitioner/applicant is cautioned to avoid submitting personal information in documents filed in a patent application that may contribute to identity theft. Personal information such as social security numbers, bank account numbers, or credit card numbers (other than a check or credit card authorization form PTO-2038 submitted for payment purposes) is never required by the USPTO to support a petition or an application. If this type of personal information is included in documents submitted to the USPTO, petitioners/applicants should consider redacting such personal information from the documents before submitting them to the USPTO. Petitioner/applicant is advised that the record of a patent application is available to the public after publication of the application (unless a non-publication request in compliance with 37 CFR 1.213(a) is made in the application) or issuance of a patent. Furthermore, the record from an abandoned application may also be available to the public if the application is referenced in a published application or an issued patent (see 37 CFR 1.14). Checks and credit card authorization forms PTO-2038 submitted for payment purposes are not retained in the application file and therefore are not publicly available.

/Mark K Johnson/	April 25, 2008
Signature	Date
Mark K Johnson	35,909
Typed or printed name	Registration Number, if applicable
505 S. Rosa Rd., Madison 53719	608-238-4400
Address	Telephone Number
Address	

Enclosures:
- ☑ Fee Payment
- ☑ Reply
- ☐ Terminal Disclaimer Form
- ☐ Additional sheets containing statements establishing unintentional delay
- ☐ Other: _____

CERTIFICATE OF MAILING OR TRANSMISSION [37 CFR 1.8(a)]

I hereby certify that this correspondence is being:

☐ Deposited with the United States Postal Service on the date shown below with sufficient postage as first class mail in an envelope addressed to: Mail Stop Petition, Commissioner for Patents, P. O. Box 1450, Alexandria, VA 22313-1450.

☑ Transmitted by facsimile on the date shown below to the United States Patent and Trademark Office at (571) 273-8300.

April 25, 2008	/Mark K Johnson/
Date	Signature
	Mark K Johnson
	Typed or printed name of person signing certificate

RAM Fee History Query

Revenue Accounting and Management

Name/Number: 10855175 Total Records Found: 8

Start Date: Any Date End Date: Any Date

Accounting Date	Sequence Num.	Fee Type	Fee Code	Fee Amount	Mailroom Date	Payment Method
04/28/2008	00002943	4	2453	$770.00	04/25/2008	CC
07/30/2007	00004227	4	2252	$225.00	07/27/2007	CC
07/30/2007	00004228	4	2801	$395.00	07/27/2007	CC
12/22/2006	00004595	4	2251	$60.00	12/22/2006	CC
04/03/2006	00000024	1	2801	$395.00	03/31/2006	CC
11/10/2005	00000008	1	1464	$130.00	11/08/2005	CC
06/01/2004	00000029	1	2001	$385.00	05/27/2004	CC
06/01/2004	00000030	1	2202	$72.00	05/27/2004	CC

UNITED STATES PATENT AND TRADEMARK OFFICE

Commissioner for Patents
United States Patent and Trademark Office
P.O. Box 1450
Alexandria, VA 22313-1450
www.uspto.gov

MAY 5 2006

MCKEE, VOORHEES & SEASE, P.L.C.
ATTN: PIONEER HI-BRED
801 GRAND AVENUE, SUITE 3200
DES MOINES IA 50309-2721

In re Application of	:
Bubeck et al.	:
Serial No.: 10/855,180	: SUSPENSION OF ACTION
Filed: May 27, 2004	:
Attorney Docket No.: P06315US02 - PHI 1432	:

This is in reply to the petition under 37 CFR 1.103 to suspend action on this application at applicants' request for a period of six months, filed March 30, 2006.

A review of the file history shows that this is an unexamined application. Applicants request that action on this application be suspended for six months in view of the fact that the claims in this case are substantially similar to claims in cases currently on appeal with the same Assignee.

§ 1.103 Suspension of action by the Office.

(a) Suspension for cause . On request of the applicant, the Office may grant a suspension of action by the Office under this paragraph for good and sufficient cause. The Office will not suspend action if a reply by applicant to an Office action is outstanding. Any petition for suspension of action under this paragraph must specify a period of suspension not exceeding six months. Any petition for suspension of action under this paragraph must also include:
(1) A showing of good and sufficient cause for suspension of action; and
(2) The fee set forth in § 1.17(g), unless such cause is the fault of the Office.

Applicants' petition requests suspension in view of the fact that the claims in this case are substantially similar to claims in cases currently on appeal with the same Assignee. No indication is given as to when these cases were filed, their status or approximate date of decision or resolution, nor how any decision would affect prosecution or patentability in this application. Also, in the instant case, no issues have as yet been developed and the issues ultimately developed may not be the same as those at the Board of Appeals. Further, it is not the general practice of the Office to suspend prosecution in unexamined applications except in extraordinary circumstances. None have been set forth in the petition. In summary, no showing of good or sufficient cause has been made.

In view of the above reason the petition is **DENIED**.

The application will be forwarded to the examiner for initial examination in turn.

Should there be any questions with respect to this action, please contact Marianne C. Seidel, by mail addressed to: Director, Technology Center 1600, P. O. BOX 1450, ALEXANDRIA, VA 22313-1450, or by telephone at 571-272-0584 or by facsimile transmission at the Office general facsimile number, 571-273-8300.

George C. Elliott

George Elliott
Director, Technology Center 1600

UNITED STATES PATENT AND TRADEMARK OFFICE

Commissioner for Patents
United States Patent and Trademark Office
P.O. Box 1450
Alexandria, VA 22313-1450
www.uspto.gov

PRATT & WHITNEY
400 MAIN STREET
MAIL STOP: 132-13
EAST HARTFORD CT 06108

COPY MAILED

OCT 01 2007

OFFICE OF PETITIONS

In re Application of :
Mongillo, et al. :
Application No. 10/855,183 : ON PETITION
Filed: May 27, 2004 :
Attorney Docket No. 3309P-0172 // PA-085.11364-US :
For: COOLED ROTOR BLADE

This is a decision on the petition, filed June 13, 2007, under 37 CFR 1.137(b) to revive the above-identified application.

The petition is **dismissed**.

Any request for reconsideration of this decision must be submitted within TWO (2) MONTHS from the mail date of this decision. Extensions of time under 37 CFR 1.136(a) are permitted. The reconsideration request should include a cover letter entitled "Renewed Petition under 37 CFR 1.137(b)." Petitioner is advised that this is not a final agency decision.

The above-identified application became abandoned for failure to timely submit a reply within one month or thirty days (whichever was longer) of the mailing of the March 29, 2006 Notice of Non-Compliant Amendment (Notice). Applicants filed an unacceptable terminal disclaimer on April 26, 2006. No extensions of time under 37 CFR 1.136(a) were obtained. This application became abandoned on April 30, 2006. A Notice of Abandonment was mailed on May 10, 2007.

A grantable petition pursuant to 37 CFR 1.137(b) must be accompanied by:

(1) the required reply, unless previously filed.;

(2) the petition fee as set forth in 37 CFR 1.17(m);

(3) a statement that the **entire** delay in filing the required reply from the due date for the reply until the filing of a grantable petition pursuant to 37 CFR 1.137(b) was unintentional. The Director may require additional information where there is a question whether the delay was unintentional; and

(4) any terminal disclaimer (and fee set forth in 37 CFR 1.20(d)) required pursuant to 37 CFR 1.137(d).

The instant petition does not satisfy requirement (2) above.

The large entity fee for filing a petition to revive an unintentionally abandoned application under 37 CFR 1.137(b) is set forth in 37 CFR 1.17(m) as $1,500.00. A review of Office records indicates that petitioners have not paid this fee.

The payment of the petition fee is a prerequisite to the filing of a petition to revive under 37 CFR 1.137(b). This requirement cannot be waived. MPEP 711.03(c)(III)(B). Therefore, consideration of the merits of the petition before receipt of the petition fee is prohibited.

Petitioners should submit the petition fee promptly. If using a deposit account to pay the fee, please ensure that an authorized user signs appropriate documents.

The revocation/power of attorney filed June 13, 2007 has been entered and made of record. Please find enclosed Notices reflecting the change of power of attorney.

Further correspondence with respect to this matter should be addressed as follows:

By mail: Mail Stop PETITION
Commissioner for Patents
Post Office Box 1450
Alexandria, VA 22313-1450

By hand: U.S. Patent and Trademark Office
Customer Service Window, Mail Stop Petition
Randolph Building
401 Dulany Street
Alexandria, VA 22314

By FAX: (571) 273-8300 – ATTN: Office of Petitions

Telephone inquiries should be directed to the undersigned at (571) 272-3230.

Shirene Willis Brantley

Shirene Willis Brantley
Senior Petitions Attorney
Office of Petitions

enclosures: Notices regarding change of power of attorney

UNITED STATES PATENT AND TRADEMARK OFFICE

UNITED STATES DEPARTMENT OF COMMERCE
United States Patent and Trademark Office
Address: COMMISSIONER FOR PATENTS
P.O. Box 1450
Alexandria, Virginia 22313-1450
www.uspto.gov

APPLICATION NUMBER	FILING OR 371 (c) DATE	FIRST NAMED APPLICANT	ATTY. DOCKET NO./TITLE
10/855,183	05/27/2004	Dominic J. Mongillo JR.	3309P-0172

CONFIRMATION NO. 8753

OC000000026034661

30188
PRATT & WHITNEY
400 MAIN STREET
MAIL STOP: 132-13
EAST HARTFORD, CT 06108

Date Mailed: 09/27/2007

NOTICE OF ACCEPTANCE OF POWER OF ATTORNEY

This is in response to the Power of Attorney filed 06/13/2007.

The Power of Attorney in this application is accepted. Correspondence in this application will be mailed to the above address as provided by 37 CFR 1.33.

Shuree Willis Brantley
Office of Initial Patent Examination (571) 272-4000 or 1-800-PTO-9199
ATTORNEY/APPLICANT COPY

UNITED STATES PATENT AND TRADEMARK OFFICE

UNITED STATES DEPARTMENT OF COMMERCE
United States Patent and Trademark Office
Address: COMMISSIONER FOR PATENTS
P.O. Box 1450
Alexandria, Virginia 22313-1450
www.uspto.gov

APPLICATION NUMBER	FILING OR 371 (c) DATE	FIRST NAMED APPLICANT	ATTY. DOCKET NO./TITLE
10/855,183	05/27/2004	Dominic J. Mongillo JR.	3309P-0172

CONFIRMATION NO. 8753

OC000000026034646

35301
MCCORMICK, PAULDING & HUBER LLP
CITY PLACE II
185 ASYLUM STREET
HARTFORD, CT 06103

Date Mailed: 09/27/2007

NOTICE REGARDING CHANGE OF POWER OF ATTORNEY

This is in response to the Power of Attorney filed 06/13/2007.

- The Power of Attorney to you in this application has been revoked by the assignee who has intervened as provided by 37 CFR 3.71. Future correspondence will be mailed to the new address of record(37 CFR 1.33).

Shirene Willis Brantley
Office of Initial Patent Examination (571) 272-4000, or 1-800-PTO-9199
NEW ATTORNEY/AGENT COPY

UNITED STATES PATENT AND TRADEMARK OFFICE

Commissioner for Patents
United States Patent and Trademark Office
P.O. Box 1450
Alexandria, VA 22313-1450
www.uspto.gov

PRATT & WHITNEY
400 MAIN STREET
MAIL STOP: 132-13
EAST HARTFORD CT 06108

COPY MAILED

FEB 1 1 2008

OFFICE OF PETITIONS

In re Application of
Mongillo, et al.
Application No. 10/855,183
Filed: May 27, 2004
Attorney Docket No. 3309P-0172 // PA-085.11364-US
For: COOLED ROTOR BLADE

ON PETITION

This is a decision on the reconsideration petition, filed December 18, 2007, under 37 CFR 1.137(b) to revive the above-identified application.

The above-identified application became abandoned for failure to timely submit a reply within one month or thirty days (whichever was longer) of the mailing of the March 29, 2006 Notice of Non-Compliant Amendment (Notice). Applicants filed an unacceptable terminal disclaimer on April 26, 2006. No extensions of time under 37 CFR 1.136(a) were obtained. This application became abandoned on April 30, 2006. A Notice of Abandonment was mailed on May 10, 2007.

Applicants have submitted a terminal disclaimer in reply to the March 29, 2006 Notice, an acceptable statement of the unintentional nature of the delay in responding to the March 29, 2006 Notice, and the petition fee.

Pursuant to petitioners' authorization, deposit account no. 21-0279 will be charged a $1,540.00 Rule 137(b) petition fee and a $120.00 extension of time fee.

The petition is **GRANTED**.

After the mailing of this decision the application will be forwarded to Technology Center AU 3745 for consideration of the terminal disclaimer filed on June 13, 2007.

Telephone inquiries should be directed to the undersigned at (571) 272-3230.

Shirene Willis Brantley

Shirene Willis Brantley
Senior Petitions Attorney
Office of Petitions

UNITED STATES PATENT AND TRADEMARK OFFICE

Commissioner for Patents
United States Patent and Trademark Office
P.O. Box 1450
Alexandria, VA 22313-1450
www.uspto.gov

MCCORMICK, PAULDING & HUBER, LLP
CITY PLACE II
185 ASYLUM STREET
HARTFORD, CT 06103

COPY MAILED
OCT 0 5 2006
OFFICE OF PETITIONS

In re Application of	:	
Tracy A. Propheter, et. al.	:	
Application No. 10/855,184	:	ON PETITION
Filed: May 27, 2004	:	
Attorney Docket No. 3309P-0154	:	

This is a decision on the petition under 37 CFR 1.137(b), filed by facsimile transmission on April 28, 2006, to revive the above-identified application.

The petition is **GRANTED**.

The application became abandoned for failure to reply to the non-final Office action mailed October 17, 2005.

The petition satisfies the requirements of 37 CFR 1.137(b) in that petitioner has supplied (1) the reply in the form of an amendment; (2) the petition fee of $1,500; and (3) an adequate statement of unintentional delay.

The file does not indicate a change of address has been submitted, although the address given on the petition differs from the address of record. If appropriate, a change of address should be filed in accordance with MPEP 601.03. A courtesy copy of this decision is being mailed to the address given on the petition; however, the Office will mail all future correspondence solely to the address of record.

The application file is being referred to Technology Center Art Unit 3745, for review of the amendment filed with the instant petition.

Telephone inquiries concerning this decision should be directed to the undersigned at (571) 272-3226.

Andrea Smith
Petitions Examiner
Office of Petitions

cc: John Swiatocha
Pratt & Whitney
400 Main Street, MS 132-13
East Hartford, CT 06108

UNITED STATES PATENT AND TRADEMARK OFFICE

Commissioner for Patents
United States Patent and Trademark Office
P.O. Box 1450
Alexandria, VA 22313-1450
www.uspto.gov

PEACOCK MYERS, P.C.
201 THIRD STREET NW, SUITE 1340
ALBUQUERQUE NM 87102

COPY MAILED

NOV 30 2006

OFFICE OF PETITIONS

In re Application of

WARREN, Coy L. II
Application No. 10/855,195
Filed: May 27, 2004
Attorney Docket No. 31757-1001-UT

DECISION ON PETITION
TO WITHDRAW
FROM RECORD

This is a decision on the Request to Withdraw as attorney or agent of record under 37 C.F.R. § 1.36(b), filed September 22, 2006.

The request is **NOT APPROVED**.

A grantable request to withdraw as attorney/agent of record must be signed by every attorney/agent seeking to withdraw or contain a clear indication that one attorney is signing on behalf of another/others. A request to withdraw will not be approved unless at least 30 (thirty) days would remain between the date of approval and the later of the expiration date of a time to file a response or the expiration date of the maximum time period which can be extended under 37 C.F.R. § 1.136(a).

The Office cannot approve the request at this time since the reasons provided do not meet any of the conditions under the mandatory or permissive categories enumerated in 37 CFR 10.40. Section 10.40 of Title 37 of the Code of Federal Regulation states, "[a] practitioner shall not withdraw from employment in a proceeding before the Office without permission from the Office[.]" More specifically, 37 CFR 10.40 states, "[i]f paragraph (b) of this section is not applicable, a practitioner may not request permission to withdraw in matter pending before the Office unless such request or such withdrawal is" for one the permissive reasons listed in 37 CFR 10.40(c). The reasons set forth in the request, "file is closed", does not meet any of the conditions set forth in 37 CFR 10.40.

All future communications from the Office will continue to be directed to the above-listed address until otherwise notified by applicant. Telephone inquiries concerning this decision should be directed to the undersigned at 571-272- 7253.

Monica A. Graves
Petitions Examiner
Office of Petitions

UNITED STATES PATENT AND TRADEMARK OFFICE

Commissioner for Patents
United States Patent and Trademark Office
P.O. Box 1450
Alexandria, VA 22313-1450
www.uspto.gov

LEVISOHN, BERGER & LANGSAM, LLP
19TH FLOOR
805 THIRD AVENUE
NEW YORK, NY 10022

COPY MAILED

FEB 0 3 2006

OFFICE OF PETITIONS

In re Patent No. 6,897,439	:	
Issued: May 24, 2005	:	
Application No. 10/855,235	:	ON PETITION
Filed: May 26, 2004	:	
Attorney Docket No. 840.043.006	:	

This is a notice regarding your request for acceptance of a fee deficiency submission under 37 CFR 1.28. On September 1, 1998, the Court of Appeals for the Federal Circuit held that 37 CFR 1.28(c) is the sole provision governing the time for correction of the erroneous payment of the issue fee as a small entity. **See DH Technology v. Synergystex International, Inc. 154 F.3d 1333, 47 USPQ2d 1865 (Fed. Cir. Sept. 1, 1998).**

The Office no longer investigates or rejects original or reissue applications under 37 CFR 1.56. **1098 Off. Gaz. Pat. Office 502 (January 3, 1989)**. Therefore, nothing in this Notice is intended to imply that an investigation was done.

Your fee deficiency submission under 37 CFR 1.28 is hereby **ACCEPTED**.

Inquiries related to this communication should be directed to the undersigned at (571) 272-3282.

Liana Chase
Petitions Examiner
Office of Petitions

UNITED STATES PATENT AND TRADEMARK OFFICE

Commissioner for Patents
United States Patent and Trademark Office
P.O. Box 1450
Alexandria, VA 22313-1450
www.uspto.gov

COPY MAILED

DEC 0 5 2006

OFFICE OF PETITIONS

FISH & RICHARDSON PC
P.O. BOX 1022
MINNEAPOLIS MN 55440-1022

In re Application of	:	
David Cooke et al	:	
Application No. 10/855,248	:	ON PETITION
Filed: May 27, 2004	:	
Attorney Docket No. 01194-468001/03-402	:	

This is a decision on the petition under 37 CFR 1.78(a)(3), filed July 10, 2006, to accept an unintentionally delayed claim under 35 U.S.C.§ 120 for the benefit of prior-filed nonprovisional Application No. 10/300,512, filed November 20, 2002.

The petition is **DISMISSED AS MOOT**.

The petition is dismissed as moot in view of the paper filed November 10, 2006 entitled "REQUEST TO WITHDRAW PETITION TO ACCEPT UNINTENTIONALLY DELAYED BENEFIT CLAIM."

In view of the above, the $1,370 petition fee submitted on July 10, 2006 is unnecessary and will be refunded to petitioner's deposit account in due course.

Any questions concerning this decision on petition may be directed to Karen Creasy at (571) 272-3208. All other inquiries concerning either the examination procedures or status of the application should be directed to the Technology Center.

This application is being referred to Technology Center AU 3736.

Karen Creasy

Karen Creasy
Petitions Examiner
Office of Petitions

UNITED STATES PATENT AND TRADEMARK OFFICE

UNITED STATES DEPARTMENT OF COMMERCE
United States Patent and Trademark Office
Address: COMMISSIONER FOR PATENTS
P.O. Box 1450
Alexandria, Virginia 22313-1450
www.uspto.gov

VOLPE AND KOENIG, P.C.
DEPT. ICC
UNITED PLAZA, SUITE 1600
30 SOUTH 17TH STREET
PHILADELPHIA, PA 19103

Mail Date: 04/26/2010

Applicant	: Gary L. Sugar	: DECISION ON REQUEST FOR
Patent Number	: 7570921	: RECALCULATION of PATENT
Issue Date	: 08/04/2009	: TERM ADJUSTMENT IN VIEW
Application No	: 10/855,279	: OF WYETH AND NOTICE OF INTENT TO
Filed	: 05/27/2004	: ISSUE CERTIFICATE OF CORRECTION
		:

The Request for Recalculation is **GRANTED** to the extent indicated.

The patent term adjustment has been determined to be **1337** days. The USPTO will *sua sponte* issue a certificate of correction reflecting the amount of PTA days determined by the recalculation.

Prior to the issuance of the certificate of correction, the USPTO will afford patentee an opportunity to be heard and request reconsideration. Accordingly, patentee has **one month or thirty (30) days**, whichever is longer, to file a request for reconsideration of this patent term adjustment calculation. See 35 U.S.C. 154(b)(3)(B)(ii) and 37 CFR 1.322(a)(4). No extensions of time will be granted under 37 CFR 1.136.

Patentee should use document code PET.OP if electronically filing a request for reconsideration of this patent term adjustment calculation. The patentee must also include the information required by 37 CFR 1.705(b)(2) and the fee required by 37 CFR 1.18(e). If patentee does not file a timely request for reconsideration of this patent term adjustment calculation including the information required by 37 CFR 1.705(b)(2) and the fee required by 37 CFR 1.18(e), the USPTO will issue a certificate of correction reflecting the PTA determination noted above.

Patentee should be aware that in order to preserve the right to review in the United States District Court for the District of Columbia of the USPTO patent term adjustment determination, patentee must ensure that he or she also take the steps required under 35 U.S.C. 154(b)(4)(A) in a timely manner. Nothing in the request for recalculation should be construed as providing an alternative time frame for commencing a civil action under 35 U.S.C. 154(b)(4)(A).

Any questions concerning this decision should be directed to the Office of Patent Legal Administration at 571-272-7702.

UNITED STATES PATENT AND TRADEMARK OFFICE

Commissioner for Patents
United States Patent and Trademark Office
P.O. Box 1450
Alexandria, VA 22313-1450
www.uspto.gov

Park & Sutton, LLP
3255 Wilshire Boulevard
Suite 1110
Los Angeles, CA 90010

COPY MAILED

AUG 0 5 2004

OFFICE OF PETITIONS

In re Application of	:	
Tae Hyeon Kim, et. al.	:	
Application No. 10/855,287	:	DECISION GRANTING PETITION
Filed: May 27, 2004	:	
Attorney Docket No. 1802.07	:	

This is a decision on the petition filed June 18, 2004, requesting that the above-identified application be accorded a filing date of May 27, 2004, instead of the presently accorded date of May 28, 2004.

The petition is **GRANTED**.

Petitioner argues that the application was deposited in "Express Mail" service with the U.S. Postal Service, on May 27, 2004. While the actual Express Mail label contained a "Date-In" of May 28, 2004, petitioner provided a copy of the original Application Transmittal Letter and a copy of the U.S. Postal Service sales receipt, which shows Express Mail label No. ED001112533US dated May 27, 2004. It is also noted that the Application Transmittal Letter contained a statement of Express Mail under 37 CFR 1.10, dated May 27, 2004. Further, a review of the USPS Track/Confirm system indicates that the Express Mail package in question was enroute May 27, 2004 at 5:47 pm (see copy attached).

The Office considers the date the paper or fee is shown to have been deposited as "Express Mail" to be the "Date-In" on the Express Mail label (See MPEP 513). That is the date that verifies that the package was actually mailed. However, the evidence herein is convincing that the application was deposited as "Express Mail" with the U.S. Postal Service on **May 27, 2004**. Accordingly, the application is entitled to a filing date of May 27, 2004 and has been so accorded.

The application is being returned to the Office of Initial Patent Examination (OIPE) for further processing with a filing date of **May 27, 2004**.

Telephone inquiries concerning this decision should be directed to Andrea Smith at (703) 308-6711. Questions related to OIPE processing should be directed to (703) 308-1202.

Andrea Smith
Petitions Examiner
Office of Petitions
Office of the Deputy Commissioner
for Patent Examination Policy

Brian Hearn
Petitions Examiner

Attachment: USPS Track/Confirm Record

UNITED STATES PATENT AND TRADEMARK OFFICE

Commissioner for Patents
United States Patent and Trademark Office
P.O. Box 1450
Alexandria, VA 22313-1450
www.uspto.gov

WHITEFORD, TAYLOR & PRESTON, LLP
ATTN: GREGORY M STONE
SEVEN SAINT PAUL STREET
BALTIMORE MD 21202-1626

MAILED

JUL 06 2010

OFFICE OF PETITIONS

In re Application of	:	
MIR, Nazir	:	
Application No. 10/855,305	:	DECISION ON PETITION
Filed: May 27, 2004	:	TO WITHDRAW
Attorney Docket No. **079395/00002**	:	FROM RECORD
	:	

This is a decision on the Request to Withdraw as attorney or agent of record under 37 C.F.R. § 1.36(b), filed April 22, 2010.

The request is **NOT APPROVED**.

The Office will no longer accept address changes to a new practitioner or law firm filed with a Request, absent the filing of a power of attorney to the new representative. The Office will either change the correspondence address of record to the most current address information provided for the assignee of the entire interest who properly became of record under 37 CFR 3.71 or, if no assignee of the entire interest has properly been made of record under 37 CFR 3.71, the most current address information provided for the first named inventor.

37 CFR 3.71(c) states:

An assignee becomes of record either in a national patent application or a reexamination proceeding by filing a statement in compliance with § 3.73(b) that is signed by a party who is authorized to act on behalf of the assignee.

Therefore, as there is currently no statement under 37 CFR 3.73(b) of record in the instant application, the Office cannot change the correspondence address to the address on the Request for Withdrawal.

All future communications from the Office will continue to be directed to the above-listed address until otherwise notified by applicant.

Telephone inquiries concerning this decision should be directed to the undersigned at 571-272-4231.

Michelle R. Eason
Paralegal Specialist
Office of Petitions

cc: **PERFTECH, INC.**
251 AIRPORT ROAD
NORTH AURORA, IL 60542

UNITED STATES PATENT AND TRADEMARK OFFICE

UNITED STATES DEPARTMENT OF COMMERCE
United States Patent and Trademark Office
Address: COMMISSIONER FOR PATENTS
P.O. Box 1450
Alexandria, Virginia 22313-1450
www.uspto.gov

IBM CORPORATION, T.J. WATSON RESEARCH CENTER
P.O. BOX 218
YORKTOWN HEIGHTS, NY 10598

Mail Date: 04/20/2010

Applicant	: Aristotelis Tsirigos	: DECISION ON REQUEST FOR
Patent Number	: 7613662	: RECALCULATION of PATENT
Issue Date	: 11/03/2009	: TERM ADJUSTMENT IN VIEW
Appliction No	: 10/855,367	: OF WYETH AND NOTICE OF INTENT TO
Filed	: 05/28/2004	: ISSUE CERTIFICATE OF CORRECTION
		:

The Request for Recalculation is **GRANTED** to the extent indicated.

The patent term adjustment has been determined to be **512** days. The USPTO will *sua sponte* issue a certificate of correction reflecting the amount of PTA days determined by the recalculation.

Prior to the issuance of the certificate of correction, the USPTO will afford patentee an opportunity to be heard and request reconsideration. Accordingly, patentee has **one month or thirty (30) days**, whichever is longer, to file a request for reconsideration of this patent term adjustment calculation. See 35 U.S.C. 154(b)(3)(B)(ii) and 37 CFR 1.322(a)(4). No extensions of time will be granted under 37 CFR 1.136.

Patentee should use document code PET.OP if electronically filing a request for reconsideration of this patent term adjustment calculation. The patentee must also include the information required by 37 CFR 1.705(b)(2) and the fee required by 37 CFR 1.18(e). If patentee does not file a timely request for reconsideration of this patent term adjustment calculation including the information required by 37 CFR 1.705(b)(2) and the fee required by 37 CFR 1.18(e), the USPTO will issue a certificate of correction reflecting the PTA determination noted above.

Patentee should be aware that in order to preserve the right to review in the United States District Court for the District of Columbia of the USPTO patent term adjustment determination, patentee must ensure that he or she also take the steps required under 35 U.S.C. 154(b)(4)(A) in a timely manner. Nothing in the request for recalculation should be construed as providing an alternative time frame for commencing a civil action under 35 U.S.C. 154(b)(4)(A).

Any questions concerning this decision should be directed to the Office of Patent Legal Administration at 571-272-7702.

UNITED STATES PATENT AND TRADEMARK OFFICE

COMMISSIONER FOR PATENTS
UNITED STATES PATENT AND TRADEMARK OFFICE
P.O. BOX 1450
ALEXANDRIA, VA 22313-1450
www.uspto.gov

MATTINGLY, STANGER, MALUR & BRUNDIDGE, P.C.
1800 DIAGONAL ROAD
SUITE 370
ALEXANDRIA VA 22314

MAILED
DEC 27 2005
Technology Center 2100

In re Application of: TANINAKA, et al.
Application No. 10/855,408
Filed: May 28, 2004
For: STORAGE SYSTEM AND CONTROL METHOD THEREOF

DECISION ON PETITION TO MAKE SPECIAL (ACCELERATED EXAMINATION) UNDER M.P.E.P. §708.02 (VIII)

This is a response to the petition filed 04 November 2005 under 37 C.F.R. §1.102(d) and M.P.E.P. §708.02 (VIII): Accelerated Examination, to make the above-identified application special.

The Petition is **GRANTED**.

M.P.E.P. §708.02, Section VIII which sets out the prerequisites for a grantable petition for Accelerated Examination under 37 C.F.R. §1.102(d) states in relevant part:

A new application (one which has not received any examination by the examiner) may be granted special status provided that applicant (and this term includes applicant's attorney or agent) complies with each of the following items:

(a) Submits a petition to make special accompanied by the fee set forth in **37 CFR 1.17(h)**;

(b) Presents all claims directed to a single invention, or if the Office determines that all the claims presented are not obviously directed to a single invention, will make an election without traverse as a prerequisite to the grant of special status;

(c) Submits a statement(s) that a pre-examination search was made, listing the field of search by class and subclass, publication, Chemical Abstracts, foreign patents, etc. The pre-examination search must be directed to the invention as claimed in the application for which special status is requested. A search made by a foreign patent office satisfies this requirement;

(d) Submits one copy each of the references deemed most closely related to the subject matter encompassed by the claims if said references are not already of record; and

(e) Submits a detailed discussion of the references, which discussion points out, with the particularity required by 37 CFR 1.111 (b) and (c), how the claimed subject matter is patentable over the references.

Applicant's submission meets all the criteria set out above. The statement for each reference in the discussion on pages 7-16 of the petition regarding the first and second features is sufficient in distinguishing how the claimed subject matter is patentable over the references. Accordingly, the petition is **GRANTED**.

The application file is being forwarded to the Examiner of Record for accelerated examination according to the procedures set forth in MPEP § 708.02, Section VIII.

Pinchus M. Laufer
Special Program Examiner
Technology Center 2100
Computer Architecture, Software and Information Security
571-272-3599

ds

UNITED STATES PATENT AND TRADEMARK OFFICE

Commissioner for Patents
United States Patent and Trademark Office
P.O. Box 1450
Alexandria, VA 22313-1450
www.uspto.gov

FOLEY AND LARDNER LLP
SUITE 500
3000 K STREET NW
WASHINGTON, DC 20007

MAILED

APR 15 2010

OFFICE OF PETITIONS

In re Application of	:	
Anderson et al.	:	DECISION ON APPLICATION
Application No. 10/855,416	:	FOR PATENT TERM ADJUSTMENT
Filed: May 28, 2004	:	
Attorney Docket No. 016754-0256	:	

This is in response to the "Request for Reconsideration of Patent Term Adjustment Under 37 C.F.R. §1.705" filed September 25, 2009. Applicants request the initial determination of patent term adjustment be corrected from three hundred seventy (370) days to four hundred ninety-one (491) days.

The request for reconsideration of the initial determination of patent term adjustment is **granted to the extent indicated herein**.

The Office has updated the PALM screen to reflect the correct Patent Term Adjustment (PTA) determination at the time of the mailing of the Notice of Allowance is 218 days. A copy of the updated PALM screen, showing the correct determination, is enclosed.

The Office mailed a Determination of Patent Term Adjustment under 35 U.S.C. § 154(b) on September 9, 2009. Applicants were advised of a patent term adjustment to date of 370 days. In response, Applicants timely filed this application for patent term adjustment with payment of the issue fee on September 25, 2009.

Applicants assert Office delay should include an additional 198 days for delay under 35 U.S.C. § 154(b)(1)(B) ("B delay"). As will be discussed, applicants also implicitly assert a reduction of 77 days should have been entered for an Information Disclosure Statement ("IDS") filed August 12, 2009.

B Delay

To the extent applicants request reconsideration of the patent term adjustment as it relates to the Office's failure to issue the patent within 3 years of the filing date, the request is premature.

Knowledge of the actual date the patent issues is required to calculate the amount, if any, of additional patent term patentee is entitled to for Office failure to issue the patent within 3 years.

See 37 C.F.R. § 1.702(b). (This is true even where a request for continued examination (RCE) was filed). The computer will not undertake the 37 C.F.R. § 1.702(b) calculation until the actual date of issuance of the patent has been determined. Likewise, the computer will not calculate any further Office delay under 37 C.F.R. § 1.702(a)(4) or applicant delay under 37 C.F.R. § 1.704(c)(10) until the actual date of issuance of the patent has been determined. As such, the Office can not make a determination on the correctness of the patent term adjustment until the patent has issued.

Requesting reconsideration of the patent term adjustment to be indicated on the patent under 37 C.F.R. § 1.705(b) based on the initial determination of patent term adjustment and a projected issuance date of the patent (or even the filing date of the request for continued examination) is premature.

Rather than file an application for patent term adjustment under 37 C.F.R. § 1.705(b) contesting the 37 C.F.R. § 1.702(b) calculation at the time of the mailing of the notice of allowance, an applicant may wait until the time of the issuance of the patent and file a request for reconsideration of the patent term adjustment pursuant to 37 C.F.R. § 1.705(d). As the USPTO does not calculate the amount of time earned pursuant to 37 C.F.R. § 1.702(b) until the time of the issuance of the patent, the Office will consider any request for reconsideration of the patent term adjustment due to an error in the calculation of 37 C.F.R. § 1.702(b) to be timely if the request for reconsideration is filed within two months of the issuance of the patent. However, as to all other bases for contesting the initial determination of patent term adjustment received with the notice of allowance, applicant must timely file an application for patent term adjustment prior to the payment of the issue fee.[1]

Any request for reconsideration of the patent term adjustment indicated on the patent must be timely filed within 2 months after issuance pursuant to 37 C.F.R. § 1.705(d) and must include payment of the required fee under 37 C.F.R. § 1.18(e).

Applicant Delay Involving the August 12, 2009 IDS

The instant request states, "The attached sheet details the circumstances during the prosecution of the application ... that constitute a failure to engage in reasonable efforts to conclude processing or examination of such application as set forth in § 1.704." The attached sheet includes a 77-day reduction for the "IDS under 1.704(c)(8) filed at PTO" on August 12, 2009.

The Office has reviewed the record and agrees a 77-day reduction under 37 C.F.R. § 1.704(c)(8) due to the IDS filed August 12, 2009, is warranted.

[1] For example, if applicant disputes both the calculation of patent term adjustment under 37 C.F.R. § 1.702(a)(1) for Office failure to mail a first Office action or notice of allowance not later than fourteen months after the date on which the application was filed and under 37 C.F.R. § 1.702(b) for Office failure to issue a patent within three years of the actual filing date of the application, then applicant must still timely file an application for patent term adjustment prior to the payment of the issue fee to contest the calculation of Office delay in issuing a first Office action or notice of allowance. See 37 C.F.R. § 1.705(b) and 35 U.S.C. § 154(b)(3)(B). A dispute as to the calculation of the 37 C.F.R. § 1.702(a)(1) period raised on request for reconsideration of patent term adjustment under 37 C.F.R. § 1.705(d) will be dismissed as untimely filed.

Pursuant to 37 C.F.R. § 1.704(c)(8), circumstances that will result in a reduction in the period of adjustment include:

> Submission of a supplemental reply or other paper, other than a supplemental reply or other paper expressly requested by the examiner, after a reply has been filed, in which case the period of adjustment set forth in § 1.703 shall be reduced by the number of days, if any, beginning on the day after the date the initial reply was filed and ending on the date that the supplemental reply or other such paper was filed.

The Office mailed a non-final Office action on March 24, 2009. Applicants filed a reply on May 27, 2009, and subsequently filed an IDS on August 12, 2009. The record fails to indicate the examiner expressly requested the IDS and the IDS was not accompanied by a statement under 37 C.F.R. § 1.704(d).

The number of days beginning on the day after May 27, 2009, the date the initial reply was filed, and ending on August 12, 2009, the date the IDS was filed, is 77 days. Therefore, a reduction of 77 days is appropriate under 37 C.F.R. § 1.704(c)(8).

In view of the prior discussion, the Office has entered a reduction of 77 days for delay under 37 C.F.R. § 1.704(c)(8).

Applicant Delay Involving Papers Filed July 2, 2007

A review of the record indicates a reduction of 75 days should have been entered under 37 C.F.R. § 1.704(c)(8) for papers filed July 2, 2007.

The Office mailed a non-final Office action on January 22, 2007. Applicants filed a reply on April 18, 2007, and subsequently filed copies of three references by facsimile transmission on July 2, 2007. The transmittal sheet indicates the sender was attorney Courtenay Brinckerhoff. The transmittal sheet states, "Per our earlier telephone conference, attached are the three (3) missing Reference nos. A74, A75, and A76."

A reduction is appropriate under 37 C.F.R. § 1.704(c)(8) unless the papers were "expressly requested by the examiner." The transmittal sheet only indicates the examiner and the attorney spoke about the references and does not indicate the examiner expressly requested the references. Therefore, a reduction is proper.

The number of days beginning on the day after April 18, 2007, the date the initial reply was filed, and ending on July 2, 2007, the date the IDS was filed, is 75 days.

In view of the prior discussion, the Office has entered a reduction of 75 days for delay under 37 C.F.R. § 1.704(c)(8).

Conclusion

The Office has entered a 77-day reduction for delay under 37 C.F.R. § 1.704(c)(8). The Office has also entered a 75-day reduction for delay under 37 C.F.R. § 1.704(c)(8).

The patent term adjustment as of the time of mailing of the notice of allowance is 218 days, which is 431 days of Office delay reduced by 213 (61 + 77 + 75) days of Applicant delay.

Submission of the $200.00 fee set forth in 37 C.F.R. § 1.18(e) is acknowledged. No additional fee is required.

Applicants are reminded that any delays by the Office pursuant to 37 C.F.R. §§ 1.702(a)(4) and 1.702(b) and any applicant delays under 37 C.F.R. § 1.704(c)(10) will be calculated at the time of the issuance of the patent and applicants will be notified of the revised patent term adjustment to be indicated on the patent in the Issue Notification letter that is mailed to applicants approximately three weeks prior to issuance.

The Office of Data Management has been advised of this decision. This matter is being referred to the Office of Data Management for issuance of the patent.

Telephone inquiries specific to this decision should be directed to Senior Petitions Attorney Steven Brantley at (571) 272-3203.

Anthony Knight
Director
Office of Petitions

Enclosure: Copy of REVISED PALM screen

Day : Monday
Date: 4/12/2010

PALM INTRANET

Time: 06:38:00

PTA Calculations for Application: 10/855416			
Application Filing Date:	05/28/2004	PTO Delay (PTO):	431
Issue Date of Patent:		Three Years:	0
Pre-Issue Petitions:	0	Applicant Delay (APPL):	61
Post-Issue Petitions:	0	Total PTA (days):	218
PTO Delay Adjustment:	-152		

File Contents History

Number	Date	Contents Description	PTO	APPL	START
87	04/12/2010	ADJUSTMENT OF PTA CALCULATION BY PTO		152	
77	09/09/2009	MAIL NOTICE OF ALLOWANCE			
76	08/31/2009	ISSUE REVISION COMPLETED			
75	08/31/2009	NOTICE OF ALLOWANCE DATA VERIFICATION COMPLETED			
74	08/31/2009	DOCUMENT VERIFICATION			
73	08/31/2009	EXAMINER'S AMENDMENT COMMUNICATION			
72	08/31/2009	NOTICE OF ALLOWABILITY			
71	08/12/2009	INFORMATION DISCLOSURE STATEMENT CONSIDERED			
70	08/12/2009	INFORMATION DISCLOSURE STATEMENT (IDS) FILED			
69	05/27/2009	OATH OR DECLARATION FILED (INCLUDING SUPPLEMENTAL)			
68	06/17/2009	DATE FORWARDED TO EXAMINER			
67	05/27/2009	RESPONSE AFTER NON-FINAL ACTION			
66	03/04/2009	MAIL NON-FINAL REJECTION			
65	03/02/2009	NON-FINAL REJECTION			
64	12/10/2008	INFORMATION DISCLOSURE STATEMENT CONSIDERED			
63	12/10/2008	INFORMATION DISCLOSURE STATEMENT (IDS) FILED		0	61
62	12/31/2008	DATE FORWARDED TO EXAMINER			
61	12/10/2008	RESPONSE AFTER NON-FINAL ACTION			
60	12/10/2008	INFORMATION DISCLOSURE STATEMENT (IDS) FILED			
59	09/22/2008	MAIL NON-FINAL REJECTION			
58	09/15/2008	NON-FINAL REJECTION			

57	07/01/2008	APPEAL BRIEF REVIEW COMPLETE			
56	07/01/2008	DATE FORWARDED TO EXAMINER			
55	06/20/2008	APPEAL BRIEF FILED			
54	04/22/2008	NOTICE OF APPEAL FILED			
53	12/12/2007	INFORMATION DISCLOSURE STATEMENT (IDS) FILED			
52	01/23/2008	MAIL FINAL REJECTION (PTOL - 326)			
51	01/22/2008	FINAL REJECTION			
49	12/12/2007	INFORMATION DISCLOSURE STATEMENT CONSIDERED			
48	12/27/2007	CASE DOCKETED TO EXAMINER IN GAU			
47	12/12/2007	OATH OR DECLARATION FILED (INCLUDING SUPPLEMENTAL)			
46	12/12/2007	INFORMATION DISCLOSURE STATEMENT (IDS) FILED			
45	12/22/2007	DATE FORWARDED TO EXAMINER			
44	12/12/2007	AMENDMENT SUBMITTED/ENTERED WITH FILING OF CPA/RCE			
43	12/22/2007	DATE FORWARDED TO EXAMINER			
42	12/12/2007	REQUEST FOR CONTINUED EXAMINATION (RCE)		61	35
41	12/22/2007	DISPOSAL FOR A RCE / CPA / R129			
40	12/12/2007	REQUEST FOR EXTENSION OF TIME - GRANTED			
39	12/12/2007	INFORMATION DISCLOSURE STATEMENT (IDS) FILED			
38	12/12/2007	WORKFLOW - REQUEST FOR RCE - BEGIN			
37	08/28/2007	CASE DOCKETED TO EXAMINER IN GAU			
36	07/02/2007	MISCELLANEOUS INCOMING LETTER			
35	07/12/2007	MAIL FINAL REJECTION (PTOL - 326)			
34	07/06/2007	FINAL REJECTION			
33	04/18/2007	AFFIDAVIT(S) (RULE 131 OR 132) OR EXHIBIT(S) RECEIVED			
32	05/06/2007	DATE FORWARDED TO EXAMINER			
31	04/18/2007	RESPONSE AFTER NON-FINAL ACTION			
30	01/22/2007	MAIL NON-FINAL REJECTION			
29	01/17/2007	NON-FINAL REJECTION			
28	05/28/2004	INFORMATION DISCLOSURE STATEMENT CONSIDERED			
27	11/02/2006	DATE FORWARDED TO EXAMINER			

26	10/31/2006	RESPONSE TO ELECTION / RESTRICTION FILED			
25	10/02/2006	MAIL RESTRICTION REQUIREMENT	431		-1
24	09/28/2006	REQUIREMENT FOR RESTRICTION / ELECTION			
23	09/10/2004	IFW TSS PROCESSING BY TECH CENTER COMPLETE			
22	09/10/2004	CASE DOCKETED TO EXAMINER IN GAU			
21	09/10/2004	REFERENCE CAPTURE ON IDS			
20.7	05/28/2004	INFORMATION DISCLOSURE STATEMENT (IDS) FILED			
20	05/28/2004	INFORMATION DISCLOSURE STATEMENT (IDS) FILED			
19	05/28/2004	PRELIMINARY AMENDMENT			
18	07/28/2004	APPLICATION RETURN FROM OIPE			
17	07/28/2004	APPLICATION RETURN TO OIPE			
16	07/28/2004	APPLICATION RETURN FROM OIPE			
15	07/28/2004	APPLICATION IS NOW COMPLETE			
14	07/28/2004	APPLICATION RETURN TO OIPE			
13	07/27/2004	APPLICATION RETURN FROM OIPE			
12	07/28/2004	APPLICATION IS NOW COMPLETE			
11	07/27/2004	PRE-EXAM OFFICE ACTION WITHDRAWN			
10	07/27/2004	APPLICATION RETURN TO OIPE			
9	07/27/2004	APPLICATION DISPATCHED FROM OIPE			
8	07/27/2004	APPLICATION IS NOW COMPLETE			
7	07/12/2004	CLEARED BY L&R (LARS)			
6	07/02/2004	REFERRED TO LEVEL 2 (LARS) BY OIPE CSR			
5	07/02/2004	CASE CLASSIFIED BY OIPE			
4	06/16/2004	IFW SCAN & PACR AUTO SECURITY REVIEW			
3	06/07/2004	CRF IS GOOD TECHNICALLY / ENTERED INTO DATABASE			
2	05/28/2004	CRF DISK HAS BEEN RECEIVED BY PREEXAM / GROUP / PCT			
1	05/28/2004	INITIAL EXAM TEAM NN			

Search Another: Application# Search

EXPLANATION OF PTA CALCULATION

EXPLANATION OF PTE CALCULATION

To go back, right click here and select Back. To go forward, right click here and select Forward. To refresh, right click here and select Refresh.

UNITED STATES PATENT AND TRADEMARK OFFICE

COMMISSIONER FOR PATENTS
UNITED STATES PATENT AND TRADEMARK OFFICE
P.O. BOX 1450
ALEXANDRIA, VA 22313-1450
www.uspto.gov

MAIL

JUL 1 3 2005

DIRECTOR OFFICE
TECHNOLOGY CENTER 2100

MATTINGLY, STANGER, MALUR & BRUNDIDGE, P.C.
1800 DIAGONAL ROAD
SUITE 370
ALEXANDRIA VA 22314

In re Application of: NAGATA
Application No. 10/855,421
Filed: May 28, 2004
For: DISK ARRAY APPARATUS AND CONTROL METHOD FOR DISK ARRAY APPARATUS

DECISION ON PETITION
TO MAKE SPECIAL
(ACCELERATED EXAMINATION)
UNDER M.P.E.P. §708.02 (VIII)

This is a response to the petition filed 18 May 2005 and supplemented by the further submission of 10 June 2005 under 37 C.F.R. §1.102(d) and M.P.E.P. §708.02 (VIII): Accelerated Examination, to make the above-identified application special.

The Petition is **DISMISSED**.

M.P.E.P. §708.02, Section VIII which sets out the prerequisites for a grantable petition for Accelerated Examination under 37 C.F.R. §1.102(d) states in relevant part:

A new application (one which has not received any examination by the examiner) may be granted special status provided that applicant (and this term includes applicant's attorney or agent) complies with each of the following items:

(a) Submits a petition to make special accompanied by the fee set forth in **37 CFR 1.17(h)**;

(b) Presents all claims directed to a single invention, or if the Office determines that all the claims presented are not obviously directed to a single invention, will make an election without traverse as a prerequisite to the grant of special status;

(c) Submits a statement(s) that a pre-examination search was made, listing the field of search by class and subclass, publication, Chemical Abstracts, foreign patents, etc. The pre-examination search must be directed to the invention as claimed in the application for which special status is requested. A search made by a foreign patent office satisfies this requirement;

(d) Submits one copy each of the references deemed most closely related to the subject matter encompassed by the claims if said references are not already of record; and

(e) Submits a detailed discussion of the references, which discussion points out, with the particularity required by 37 CFR 1.111 (b) and (c), how the claimed subject matter is patentable over the references.

In those instances where the request for this special status does not meet all the prerequisites set forth above, **applicant will be notified and the defects in the request will be stated**. The application will remain in the status of a new application awaiting action in its regular turn. In those instances where a request is defective in one or more respects, applicant will be given one opportunity to perfect the request in a renewed petition to make special. If perfected, the request will then be granted. If not perfected in the first renewed petition, any additional renewed petitions to make special may or may not be considered at the discretion of the Technology Center (TC) Special Program Examiner.

The petition filed 18 May 2005 and supplemented on 10 June 2005 fails to adequately meet requirement (e) of the criteria set forth above. The discussion of the references does not point out with the particularity required by 37 CFR 1.111(b) and (c) how the claimed subject matter is patentable over the references.

The petition identifies a feature of each independent claim (i.e., a first feature of independent claim 1, . . ., a third feature of independent claim 13). However, in identifying this feature, the discussion states that the references "fail to disclose or suggest [the identified feature] *in combination* with the other limitations recited in the claims" (emphasis added). It is also stated in the discussion of each reference that the reference "does not disclose or suggest" the identified feature for each independent claim "*in combination* with the other limitations recited in each of the independent claims" (emphasis added). In effect, the discussion states that the *entirety* of the three independent claims is not disclosed by the nine references purported to be most closely related. Such a statement is not a sufficient detailed description. Applicants may wish to consider deleting the portions of the discussion that indicate that the identified features *in combination* with the other limitations are not disclosed by the references. Also, it is suggested that if the identical statement is being made to distinguish each reference from the claims, as in the supplemental petition, then the statement should simply be made once in the petition. (E.g., "None of the references disclose . . . .")

The discussion also states that, for each of the nine references deemed most closely related, the reference fails to disclose a "control processor that manages . . . of the second logical volume." However, it is unclear what is intended by the discussion of this particular feature when this feature does not even appear in all of the independent claims. (The feature is recited in claims 1 and 13 but does not appear in claim 3.)

Petition to Make Special **DISMISSED**.

Petitioner is given one opportunity to perfect the petition. Any request for reconsideration must be filed within TWO MONTHS of the mail date of this decision.

Until the renewed petition is submitted, the application will be returned to the examiner's docket to await treatment on the merits in the normal order of examination.

Pinchus M. Laufer

Pinchus M. Laufer
Special Program Examiner
Technology Center 2100
Computer Architecture, Software and Information Security
571-272-3599

UNITED STATES PATENT AND TRADEMARK OFFICE

COMMISSIONER FOR PATENTS
UNITED STATES PATENT AND TRADEMARK OFFICE
P.O. BOX 1450
ALEXANDRIA, VA 22313-1450
www.uspto.gov

MAILED

NOV - 8 2005

Technology Center 2100

MATTINGLY, STANGER, MALUR & BRUNDIDGE, P.C.
1800 DIAGONAL ROAD
SUITE 370
ALEXANDRIA VA 22314

In re Application of: NAGATA
Application No. 10/855,421
Filed: May 28, 2004
For: DISK ARRAY APPARATUS AND CONTROL METHOD FOR DISK ARRAY APPARATUS

DECISION ON PETITION
TO MAKE SPECIAL
(ACCELERATED EXAMINATION)
UNDER M.P.E.P. §708.02 (VIII)

This is a response to the renewed petition filed 24 August 2005, under 37 C.F.R. §1.102(d) and M.P.E.P. §708.02 (VIII): Accelerated Examination, to make the above-identified application special.

The renewed petition was filed in response to a dismissal of the original petition filed 18 May 2005 and supplemented by the further submission of 10 June 2005. The petition was dismissed for failure to provide a detailed discussion of the references, which discussion points out with the particularity required by 37 CFR 1.111(b) and (c), how the claimed subject matter is patentable over the references.

Applicants' submission filed 24 August 2005 corrects the deficiency noted in the original decision. The combined submissions meet all the criteria set out above. Accordingly, the petition is **GRANTED**.

The application file is being forwarded to the Examiner of Record for accelerated examination according to the procedures set forth in MPEP § 708.02, Section VIII.

Pinchus M. Laufer
Special Program Examiner
Technology Center 2100
Computer Architecture, Software and Information Security
571-272-3599

ds

UNITED STATES PATENT AND TRADEMARK OFFICE

Commissioner for Patents
United States Patent and Trademark Office
P.O. Box 1450
Alexandria, VA 22313-1450
www.uspto.gov

COPY MAILED

MAR 24 2006

OFFICE OF PETITIONS

KNOBBE MARTENS OLSON & BEAR LLP
2040 MAIN STREET
FOURTEEN FLOOR
IRVINE, CA 92614

In re Application of	:	
Werner Juengling	:	
Application No. 10/855,429	:	ON PETITION
Filed: May 26, 2004	:	
Attorney Docket No. MI22-2456		

This is a decision on the petition filed, March 20, 2006 under 37 CFR 1.313(c)(2) to withdraw the above-identified application from issue after payment of the issue fee.

The petition is **GRANTED**.

The above-identified application is withdrawn from issue for consideration of a submission under 37 CFR 1.114 (request for continued examination). See 37 CFR 1.313(c)(2).

Petitioner is advised that the issue fee paid on February 23, 2006 in the above-identified application cannot be refunded. If, however, the above-identified application is again allowed, petitioner may request that it be applied towards the issue fee required by the new Notice of Allowance.[1]

Telephone inquiries should be directed to Irvin Dingle at (571) 272-3210.

This matter is being referred to Technology Center AU 2818 for processing of the request for continued examination under 37 CFR 1.114 and for consideration of the concurrently filed Information Disclosure Statement.

Irvin Dingle
Petitions Examiner
Office of Petitions

---

[1] The request to apply the issue fee to the new Notice may be satisfied by completing and returning the new Issue Fee Transmittal Form PTOL-85(b), which includes the following language thereon: Commissioner for Patents is requested to apply the Issue Fee and Publication Fee (if any) or re-apply any previously paid issue fee to the application identified above. Petitioner is advised that, whether a fee is indicated as being due or not, the Issue Fee Transmittal Form **must** be completed and timely submitted to avoid abandonment. Note the language in bold text on the first page of the Notice of Allowance and Fee(s) Due (PTOL-85).

UNITED STATES PATENT AND TRADEMARK OFFICE

Commissioner for Patents
United States Patent and Trademark Office
P.O. Box 1450
Alexandria, VA 22313-1450
www.uspto.gov

WENDEROTH, LIND & PONACK, L.L.P.
2033 K STREET N.W.
SUITE 800
WASHINGTON DC 20006-1021

COPY MAILED

FEB 05 2007

OFFICE OF PETITIONS

In re Application of	:	
Takuya Nakada et al	:	
Application No. 10/855,442	:	DECISION GRANTING PETITION
Filed: May 28, 2004	:	UNDER 37 CFR 1.137(b)
Attorney Docket No. 2004-0835A	:	

This is a decision on the petition under 37 CFR 1.137(b), filed October 4, 2006, to revive the above-identified application.

The petition is **GRANTED**.

The petition satisfies the conditions for revival pursuant to the provisions of 37 CFR 1.137(b) in that (1) the reply in the form of an RCE and an amendment; (2) the petition fee; and (3) the required statement of unintentional delay have been received. Accordingly, the reply to the Final Rejection of March 20, 2006 and the Notice of August 15, 2006 is accepted as having been unintentionally delayed.

An extension of time under 37 CFR 1.136 must be filed prior to the expiration of the maximum extendable period for reply. See In re Application of S., 8 USPQ2d 1630, 1631 (Comm'r Pats. 1988). Accordingly, since the $570 extension of time submitted with the petition on October 4, 2006 was subsequent to the maximum extendable period for reply, petitioner may request a refund of this fee by writing to the Office of Finance, Refund Section. A copy of this decision should accompany petitioner's request.

Telephone inquiries concerning this decision should be directed to the undersigned at (571) 272-3208.

This matter is being referred to Technology Center AU 3618.

Karen Creasy

Karen Creasy
Petitions Examiner
Office of Petitions

UNITED STATES PATENT AND TRADEMARK OFFICE

UNITED STATES DEPARTMENT OF COMMERCE
United States Patent and Trademark Office
Address: COMMISSIONER FOR PATENTS
P.O. Box 1450
Alexandria, Virginia 22313-1450
www.uspto.gov

OGILVY RENAULT LLP
1, Place Ville Marie
SUITE 2500
MONTREAL, QC H3B 1R1
CANADA

Mail Date: 04/21/2010

Applicant	: Therese Di Paolo	: DECISION ON REQUEST FOR
Patent Number	: 7576073	: RECALCULATION of PATENT
Issue Date	: 08/18/2009	: TERM ADJUSTMENT IN VIEW
Appliction No	: 10/855,493	: OF WYETH AND NOTICE OF INTENT TO
Filed	: 05/28/2004	: ISSUE CERTIFICATE OF CORRECTION
		:

The Request for Recalculation is **GRANTED** to the extent indicated.

The patent term adjustment has been determined to be **1131** days. The USPTO will *sua sponte* issue a certificate of correction reflecting the amount of PTA days determined by the recalculation.

Prior to the issuance of the certificate of correction, the USPTO will afford patentee an opportunity to be heard and request reconsideration. Accordingly, patentee has **one month or thirty (30) days**, whichever is longer, to file a request for reconsideration of this patent term adjustment calculation. See 35 U.S.C. 154(b)(3)(B)(ii) and 37 CFR 1.322(a)(4). No extensions of time will be granted under 37 CFR 1.136.

Patentee should use document code PET.OP if electronically filing a request for reconsideration of this patent term adjustment calculation. The patentee must also include the information required by 37 CFR 1.705(b)(2) and the fee required by 37 CFR 1.18(e). If patentee does not file a timely request for reconsideration of this patent term adjustment calculation including the information required by 37 CFR 1.705(b)(2) and the fee required by 37 CFR 1.18(e), the USPTO will issue a certificate of correction reflecting the PTA determination noted above.

Patentee should be aware that in order to preserve the right to review in the United States District Court for the District of Columbia of the USPTO patent term adjustment determination, patentee must ensure that he or she also take the steps required under 35 U.S.C. 154(b)(4)(A) in a timely manner. Nothing in the request for recalculation should be construed as providing an alternative time frame for commencing a civil action under 35 U.S.C. 154(b)(4)(A).

Any questions concerning this decision should be directed to the Office of Patent Legal Administration at 571-272-7702.

UNITED STATES PATENT AND TRADEMARK OFFICE

Commissioner for Patents
United States Patent and Trademark Office
P.O. Box 1450
Alexandria, VA 22313-1450
www.uspto.gov

ROBERT W.B BAILEY
BOX 2
STATION L
WINNIPEG MB R3H 0Z4 CA CANADA

COPY MAILED
MAY 12 2006
OFFICE OF PETITIONS

In re Application of	:	
Robertson, Reginald R.	:	
Application No. 10/855,498	:	ON PETITION
Filed: May 28, 2004	:	
Attorney Docket No. 416-1US	:	

This is a decision on the petition under 37 CFR 1.102(c)(1), filed April 17, 2006, to make the above-identified application special based on applicant's age as set forth in M.P.E.P. § 708.02, Section IV.

The petition is **GRANTED**.

A grantable petition to make an application special under 37 CFR 1.102(c)(1) and MPEP § 708.02, Section IV: Applicant's Age must be accompanied by evidence showing that at least one of the applicants is 65 years of age, or more, such as a birth certificate or a statement by applicant. No fee is required.

The instant petition includes a copy of the applicant's birth certificate. Accordingly, the above-identified application has been accorded "special" status.

Telephone inquiries concerning this decision should be directed to the undersigned at 571-272-3206.

All other inquiries concerning either the examination or status of the application should be directed to the Technology Center.

This matter is being referred to the Technology Center Art Unit 2836 for action on the merits commensurate with this decision.

Liana Chase
Petitions Examiner
Office of Petitions

UNITED STATES PATENT AND TRADEMARK OFFICE

UNITED STATES DEPARTMENT OF COMMERCE
United States Patent and Trademark Office
Address: COMMISSIONER FOR PATENTS
P.O. Box 1450
Alexandria, Virginia 22313-1450
www.uspto.gov

KENYON & KENYON LLP
1500 K STREET N.W.
SUITE 700
WASHINGTON, DC 20005

Mail Date: 04/21/2010

Applicant	: Takeuchi Yasutaka	: DECISION ON REQUEST FOR
Patent Number	: 7617600	: RECALCULATION of PATENT
Issue Date	: 11/17/2009	: TERM ADJUSTMENT IN VIEW
Appliction No	: 10/855,510	: OF WYETH AND NOTICE OF INTENT TO
Filed	: 05/28/2004	: ISSUE CERTIFICATE OF CORRECTION
		:

The Request for Recalculation is **GRANTED** to the extent indicated.

The patent term adjustment has been determined to be **1217** days. The USPTO will *sua sponte* issue a certificate of correction reflecting the amount of PTA days determined by the recalculation.

Prior to the issuance of the certificate of correction, the USPTO will afford patentee an opportunity to be heard and request reconsideration. Accordingly, patentee has **one month or thirty (30) days**, whichever is longer, to file a request for reconsideration of this patent term adjustment calculation. See 35 U.S.C. 154(b)(3)(B)(ii) and 37 CFR 1.322(a)(4). No extensions of time will be granted under 37 CFR 1.136.

Patentee should use document code PET.OP if electronically filing a request for reconsideration of this patent term adjustment calculation. The patentee must also include the information required by 37 CFR 1.705(b)(2) and the fee required by 37 CFR 1.18(e). If patentee does not file a timely request for reconsideration of this patent term adjustment calculation including the information required by 37 CFR 1.705(b)(2) and the fee required by 37 CFR 1.18(e), the USPTO will issue a certificate of correction reflecting the PTA determination noted above.

Patentee should be aware that in order to preserve the right to review in the United States District Court for the District of Columbia of the USPTO patent term adjustment determination, patentee must ensure that he or she also take the steps required under 35 U.S.C. 154(b)(4)(A) in a timely manner. Nothing in the request for recalculation should be construed as providing an alternative time frame for commencing a civil action under 35 U.S.C. 154(b)(4)(A).

Any questions concerning this decision should be directed to the Office of Patent Legal Administration at 571-272-7702.

UNITED STATES PATENT AND TRADEMARK OFFICE

Commissioner for Patents
United States Patent and Trademark Office
P.O. Box 1450
Alexandria, VA 22313-1450
www.uspto.gov

Patent No. : 7,647,212 B2
Ser. No. : 10/855,515
Inventor(s) : Andreoli et al.
Issued : Jan. 12, 2010
Title : GRAPH-BASED NEGOTIATION SYSTEM WITH ENCAPSULATED CONSTRAINT SOLVER
Docket No. : A3356-US-NP

Re: Request for Certificate of Correction

Consideration has been given your request for the issuance of a certificate of correction for the above-identified patent under the provisions of Rule(s) 1.322 and/or 1.323.

Assignees' names and addresses (assignment data) printed in a patent, are based *solely* on information supplied in the appropriate space for identifying the assignment data, i.e., item 3 of the Issue Fee Transmittal Form PTOL-85B. Granting of a request under 37 CFR 3.81(b) is required to correct applicant's error providing ***incorrect or erroneous*** assignment data, *before* issuance of a Certificate of Correction, under 37 CFR 1.323 *(see Manual of Patent Examining Procedures (M.P.E.P) Chp.1400, sect. 1481).* This procedure is required *at any time after the issue fee is paid*, including after issuance of the patent.

In view of the foregoing, your request, in this mater, is hereby denied.

A request to correct the Assignee under 37 CFR 3.81(b) should include:

A. **the processing fee set forth in 37 CFR 1.117(h) (currently $130);**
B. a statement that the failure to include the correct assignee name on the PTOL-85B was inadvertent; and
C. a copy of the Notice of Recordation of Assignment Document, reflecting the reel and frame number where the assignment(s) is recorded and/or reflecting proof of *the date* the assignment was submitted for recordation.

In the Request, Applicant(s) may request that the file be forwarded to Certificates of Correction Branch, for issuance of a Certificate of Correction, if the Request is granted.

Any request under 37 CFR 3.81(b) should be directed to the following address or facsimile number:

By mail: Mail Stop PETITIONS
Commissioner for Patents
Post Office Box 1450
Alexandria, VA 22313-1450

By hand: Customer Service Window
Mail Stop Petitions
Randolph Building
401 Dulany Street
Alexandria, VA 22314

By fax: (571) 273-0025
ATTN: Office of Petitions

If a fee (currently $100) was previously submitted for consideration of a Request for Certificate of Correction, under CFR 1.323, to correct assignment data, , no additional fee is required.

Ennis Young
For Mary Diggs
Decisions & Certificates
of Correction Branch
(703) **756-1542** or (703) 756-1814

UNITED STATES PATENT AND TRADEMARK OFFICE

Commissioner for Patents
United States Patent and Trademark Office
P.O. Box 1450
Alexandria, VA 22313-1450
www.uspto.gov

MAILED

MAY 11 2010

OFFICE OF PETITIONS

FAY SHARPE LLP / XEROX - PARC
1228 EUCLID AVENUE, 5TH FLOOR
THE HALLE BUILDING
CLEVELAND OH 44115

In re Patent No. 7,647,212 :
Issue Date: January 12, 2010 :
Application No. 10/855,515 : DECISION ON PETITION
Filed: May 28, 2004 :
Attorney Docket No. A3356-US-NP :

This is a decision on the Request For Certificate Of Correction Of Patent For Applicants' Mistake To Correct The Name Of The Assignee (37 C.F.R. §1.323 and 37 C.F.R. §3.81(b)), filed January 18, 2010; the Second Request For Certificate Of Correction Of Patent For Applicants' Mistake To Correct The Name Of The Assignee (37 C.F.R. §1.323 and 37 C.F.R. §3.81(b)), filed April 1, 2010; requesting correction on the Title Page of the subject patent to identify the correct assignee's name and residence. The Requests are being treated as a Petition. A completed Certificate of Correction Form (PTO/SB/44) was submitted.

The petition under 37 CFR 3.81 is **GRANTED**.

Petitioner urges that the present Petition was submitted to correct the error in the assignee's name and residence on the previously submitted PTOL 85B and that such error to be corrected was inadvertent. Accordingly, petitioner requests, in effect, that the Title Page of the above-identified patent be corrected, via issuance of a Certificate of Correction, to correct the name of the assignee identified thereon from:

"Palo Alto Research Center Incorporated, Palo Alto, CA (US)"

to:

-- Xerox Corporation, Norwalk, CT (US) --

37 CFR 3.81(b), effective June 25, 2004, reads:

> *After payment of the issue fee:* Any request for issuance of an application in the name of the assignee submitted after the date of payment of the issue fee, and any request for a patent to be corrected to state the name of the assignee, must state that the assignment was submitted for recordation as set forth in

> § 3.11 before issuance of the patent, and must include a request for a certificate of correction under § 1.323 of this chapter (accompanied by the fee set forth in § 1.20(a) and the processing fee set forth in § 1.17(i) of this chapter.

The requisite $100.00 fee (Fee Code 1811) and the $130.00 processing fee (Fee Code 1464) as set forth under 37 CFR 1.20(a) were submitted. Further, Office assignment records are consistent with the requested correction. Accordingly, since the Petition complies with the provisions of 37 CFR 3.81(b), it is appropriate for the Office may have to issue a Certificate of Correction in accordance with the content of the Form (PTO/SB/44) that was submitted.

Inquiries related this communication should be directed to Cheryl Gibson-Baylor at (571)272-3213.

Any questions concerning the issuance of a Certificate of Correction should be directed to the Certificates of Correction Branch at (571) 272-4200.

This matter is being referred to the Certificates of Correction Branch for processing of a Certificate of Correction in U.S. Patent No. 7,647,212.

Brian W. Brown
Petitions Examiner
Office of Petitions

UNITED STATES PATENT AND TRADEMARK OFFICE

UNITED STATES DEPARTMENT OF COMMERCE
United States Patent and Trademark Office
Address: COMMISSIONER FOR PATENTS
P.O. Box 1450
Alexandria, Virginia 22313-1450
www.uspto.gov

SAP / FINNEGAN, HENDERSON LLP
901 NEW YORK AVENUE, NW
WASHINGTON, DC 20001-4413

Mail Date: 04/21/2010

Applicant	: Achim Clemens	: DECISION ON REQUEST FOR
Patent Number	: 7603361	: RECALCULATION of PATENT
Issue Date	: 10/13/2009	: TERM ADJUSTMENT IN VIEW
Appliction No	: 10/855,522	: OF WYETH AND NOTICE OF INTENT TO
Filed	: 05/28/2004	: ISSUE CERTIFICATE OF CORRECTION
		:

The Request for Recalculation is **GRANTED** to the extent indicated.

The patent term adjustment has been determined to be **531** days. The USPTO will *sua sponte* issue a certificate of correction reflecting the amount of PTA days determined by the recalculation.

Prior to the issuance of the certificate of correction, the USPTO will afford patentee an opportunity to be heard and request reconsideration. Accordingly, patentee has **one month or thirty (30) days**, whichever is longer, to file a request for reconsideration of this patent term adjustment calculation. See 35 U.S.C. 154(b)(3)(B)(ii) and 37 CFR 1.322(a)(4). No extensions of time will be granted under 37 CFR 1.136.

Patentee should use document code PET.OP if electronically filing a request for reconsideration of this patent term adjustment calculation. The patentee must also include the information required by 37 CFR 1.705(b)(2) and the fee required by 37 CFR 1.18(e). If patentee does not file a timely request for reconsideration of this patent term adjustment calculation including the information required by 37 CFR 1.705(b)(2) and the fee required by 37 CFR 1.18(e), the USPTO will issue a certificate of correction reflecting the PTA determination noted above.

Patentee should be aware that in order to preserve the right to review in the United States District Court for the District of Columbia of the USPTO patent term adjustment determination, patentee must ensure that he or she also take the steps required under 35 U.S.C. 154(b)(4)(A) in a timely manner. Nothing in the request for recalculation should be construed as providing an alternative time frame for commencing a civil action under 35 U.S.C. 154(b)(4)(A).

Any questions concerning this decision should be directed to the Office of Patent Legal Administration at 571-272-7702.

UNITED STATES PATENT AND TRADEMARK OFFICE

Commissioner for Patents
United States Patent and Trademark Office
P.O. Box 1450
Alexandria, VA 22313-1450
www.uspto.gov

In re Application of
P. Martin PETKOVICH et al
Serial No. 10/855,532
Filed: May 28, 2004
For: RETINOID METABOLIZING PROTEIN

DECISION ON PETITION

This is a decision on the petition to request acceptance of color drawings under 37 C.F.R. §1.84(a) filed May 28, 2004.

The petition has been reviewed and is found to be in compliance with the requirements as set forth in 37 C.F.R. § 1.84 (a). A black and white copy of the color drawing is enclosed in accordance with § 37 C.F.R. 1.84(a) (2) (iii). The brief description of the drawings section of the specification has been amended to indicate that the patent application file contains at least one color drawing excuted in color, and that copies of the color drawings will be provided by the Office upon request and payment of the necessary fee.

The required fee for the petition has been paid.

PETITION GRANTED.

Ponnathapu N. Achutamurthy
Supervisory Patent Examiner
Art Unit 1652.

John C. Hunt
Torys LLP (Customer Number 33,721)
Suite 3000
79 Wellington Street West
Box 270, TD Center
Toronto, Ontario
M5K 1N2, Canada

UNITED STATES PATENT AND TRADEMARK OFFICE

Commissioner for Patents
United States Patent and Trademark Office
P.O. Box 1450
Alexandria, VA 22313-1450
www.uspto.gov

FOLEY & LARDNER LLP
P.O. BOX 80278
SAN DIEGO CA 92138-0278

COPY MAILED

AUG 1 8 2008

In re Application of	:	
CHATRATH	:	
Application No. 10/855,551	:	DECISION ON PETITION
Filed: May 26, 2004	:	TO WITHDRAW
Attorney Docket No. 037145-2501	:	FROM RECORD
	:	

This is a decision on the Request to Withdraw as attorney or agent of record under 37 C.F.R. § 1.36(b), filed July 11, 2008.

The request is **NOT APPROVED.**

A grantable request to withdraw as attorney/agent of record must be signed by every attorney/agent seeking to withdraw or contain a clear indication that one attorney is signing on behalf of another/others. The Office requires the practitioner(s) requesting withdrawal to certify that he, she, or they have: (1) given reasonable notice to the client, prior to the expiration of the response period, that the practitioner(s) intends to withdraw from employment; (2) delivered to the client or a duly authorized representative of the client all papers and property (including funds) to which the client is entitled; and (3) notified the client of any responses that may be due and the time frame within which the client must respond, pursuant 37 CFR 10.40(c).

The request cannot be approved because there is no indication that the acts noted in the above-identified certifications have been performed.

All future communications from the Office will continue to be directed to the above-listed address until otherwise notified by applicant.

Telephone inquiries concerning this decision should be directed to the undersigned at 571-272-6735.

Diane Goodwyn
Petitions Examiner
Office of Petitions

cc: MR. BRADLEY C. WRIGHT
BANNER & WITCOFF LLP
1100 13TH STREET, NW, SUITE 1200
WASHINGTON, DC 20005

UNITED STATES PATENT AND TRADEMARK OFFICE

Commissioner for Patents
United States Patent and Trademark Office
P.O. Box 1450
Alexandria, VA 22313-1450
www.uspto.gov

FOLEY & LARDNER LLP
321 NORTH CLARK STREET,
SUITE 2800
CHICAGO, IL 60610-4764

COPY MAILED

OCT 23 2008

OFFICE OF PETITIONS

In re Application of	:	
Vishal CHATRATH	:	
Application No. 10/855,551	:	DECISION ON PETITION
Filed: May 26, 2004	:	TO WITHDRAW
Attorney Docket No. 037145-2501	:	FROM RECORD
	:	

This is a decision on the Request to Withdraw as attorney or agent of record under 37 C.F.R. § 1.36(b), filed September 22, 2008.

The request is **NOT APPROVED** as moot.

A review of the file record indicates that the power of attorney to Foley & Lardner, LLP, has been revoked by the assignee of the patent application on October 3, 2008. Accordingly, the request to withdraw under 37 C.F.R. § 1.36(b) is moot.

All future communication from the Office will be directed to the address indicated below until otherwise properly notified by the applicant.

Telephone inquires concerning this decision should be directed to undersigned at 571-272- 6735.

Diane Goodwyn
Petitions Examiner
Office of Petitions

cc: BANNER & WITCOFF, LTD.
1100 13TH STREET, N.W., SUITE 1200
WASHINGTON, DC 20005-4051

UNITED STATES PATENT AND TRADEMARK OFFICE

Commissioner for Patents
United States Patent and Trademark Office
P.O. Box 1450
Alexandria, VA 22313-1450
www.uspto.gov

NOV 08 2005

George W. Luckhardt
Law Office of Park & Associates
3600 Wilshire Blvd., Suite 1722
Los Angeles, CA 90010

In re Application of:
Tae Hyeon Kim
Serial No.: 10/855,554
Filed: May 27, 2004
Attorney Docket No.: **1802.05**

DECISION ON REQUEST TO WITHDRAW FROM RECORD

This is a decision on the request to withdraw as attorney of record under 37 C.F.R. § 1.36, filed January 05, 2005.

The request is **DISMISSED** as moot.

A review of the application file record reveals a proper revocation and power of attorney to the attorneys of Park & Sutton LLP was filed on May 04, 2005. As such, the power of attorney for the attorneys and agents requesting withdrawal has already been revoked. Accordingly, the present request is moot, and must be dismissed.

All future communications form the Office will continue to be directed to the below-listed address until otherwise notified by applicant.

Inquiries related to this decision should be directed to Clayton E. LaBalle at (571) 272-1594.

Clayton E. LaBalle, Special Programs Examiner
Technology Center 2800
Semiconductors, Electrical and Optical
Systems and Components

cc: PARK & SUTTON LLP
3255 Wilshire Blvd, Suite 1110
Los Angeles CA 90010

UNITED STATES PATENT AND TRADEMARK OFFICE

Commissioner for Patents
United States Patent and Trademark Office
P.O. Box 1450
Alexandria, VA 22313-1450
www.uspto.gov

BANNER & WITCOFF
1001 G Street N.W.
Suite 1100
Washington DC 20001

MAILED
APR 2 6 2005
Technology Center 2100

In re Application of:
Jack E. MYERS, et al.
Application No. 10/855,572
Filed: May 28, 2004
For: DEFINING A DATA DEPENDENCY PATH THROUGH A BODY OF RELATED DATA

DECISION ON PETITION TO MAKE SPECIAL

This is a decision on the petition under 37 C.F.R. § 1.102(c) and M.P.E.P. § 708.02, Section IV: Applicant's Age, filed June 23, 2004 to make the above-identified application special.

A grantable petition to make special under 37 C.F.R. § 1.102(c) and in accordance with M.P.E.P. § 708.02, Section IV must include a showing, as by a birth certificate or the applicant's statement, that the applicant is sixty five (65) years of age or more. No fee is required for this petition.

The petition includes a statement that the applicant, Jack E. Myers, is over sixty five (65) years of age.

Accordingly, the petition is GRANTED. The application is being forwarded to the examiner for expedite prosecution.

For Vincent N. Trans
Special Program Examiner
Technology Center 2100
Computer Architecture, Software, and Information Security
571-272-3613

UNITED STATES PATENT AND TRADEMARK OFFICE

COMMISSIONER FOR PATENTS
UNITED STATES PATENT AND TRADEMARK OFFICE
P.O. BOX 1450
ALEXANDRIA, VA 22313-1450
www.uspto.gov

MAILED

Paper No.

MAR 17 2010

OFFICE OF PETITIONS

MCCARTER & ENGLISH, LLP BOSTON
265 Franklin Street
Boston MA 02110

In re Patent No. 7,601,505	: DECISION ON REQUEST FOR
Monahan et al.	: RECONSIDERATION OF
Issue Date: October 13, 2009	: PATENT TERM ADJUSTMENT
Application No. 10/855,588	: and
Filed: May 26, 2004	: NOTICE OF INTENT TO ISSUE
Atty Docket No.: 117742-06401	: CERTIFICATE OF CORRECTION

This is a decision on the petition filed on December 4, 2009, which is being treated as a petition under 37 CFR 1.705(d) requesting that the patent term adjustment indicated on the above-identified patent be corrected to indicate that the term of the above-identified patent is extended or adjusted by one thousand, one hundred and thirty-one (1131) days.

The petition to correct the patent term adjustment indicated on the above-identified patent to indicate that the term of the above-identified patent is extended or adjusted by one thousand, one hundred and thirty-one (1131) days is **GRANTED**.

The Office acknowledges submission of the $200.00 fee set forth in 37 CFR 1.18(e). No additional fees are required.

The application is being forwarded to the Certificates of Branch for issuance of a certificate of correction. The Office will issue a certificate of correction indicating that the term of the above-identified patent is extended or adjusted by **one thousand, one hundred and thirty-one (1131) days.**

Telephone inquiries specific to this matter should be directed to Senior Attorney Paul Shanoski at (571) 272-3225.

Nancy Johnson
Senior Petitions Attorney
Office of Petitions

Enclosure: Copy of DRAFT Certificate of Correction

UNITED STATES PATENT AND TRADEMARK OFFICE

CERTIFICATE OF CORRECTION

PATENT : 7,601,505 B2

DATED : **October 13, 2009** **DRAFT**

INVENTOR(S) : **Monahan et al.**

It is certified that error appears in the above-identified patent and that said Letters Patent is hereby corrected as shown below:

On the cover page,

[*] Notice: Subject to any disclaimer, the term of this patent is extended or adjusted under 35 USC 154(b) by 753 days

Delete the phrase "by 753 days" and insert – by 1131 days --

UNITED STATES PATENT AND TRADEMARK OFFICE

UNITED STATES DEPARTMENT OF COMMERCE
United States Patent and Trademark Office
Address: COMMISSIONER FOR PATENTS
P.O. Box 1450
Alexandria, Virginia 22313-1450
www.uspto.gov

MCCARTER & ENGLISH, LLP BOSTON
265 Franklin Street
Boston, MA 02110

Mail Date: 04/21/2010

Applicant	: John E. Monahan	: DECISION ON REQUEST FOR
Patent Number	: 7601505	: RECALCULATION of PATENT
Issue Date	: 10/13/2009	: TERM ADJUSTMENT IN VIEW
Appliction No	: 10/855,588	: OF WYETH AND NOTICE OF INTENT TO
Filed	: 05/26/2004	: ISSUE CERTIFICATE OF CORRECTION
		:

The Request for Recalculation is **GRANTED** to the extent indicated.

The patent term adjustment has been determined to be **1509** days. The USPTO will *sua sponte* issue a certificate of correction reflecting the amount of PTA days determined by the recalculation.

Prior to the issuance of the certificate of correction, the USPTO will afford patentee an opportunity to be heard and request reconsideration. Accordingly, patentee has **one month or thirty (30) days**, whichever is longer, to file a request for reconsideration of this patent term adjustment calculation. See 35 U.S.C. 154(b)(3)(B)(ii) and 37 CFR 1.322(a)(4). No extensions of time will be granted under 37 CFR 1.136.

Patentee should use document code PET.OP if electronically filing a request for reconsideration of this patent term adjustment calculation. The patentee must also include the information required by 37 CFR 1.705(b)(2) and the fee required by 37 CFR 1.18(e). If patentee does not file a timely request for reconsideration of this patent term adjustment calculation including the information required by 37 CFR 1.705(b)(2) and the fee required by 37 CFR 1.18(e), the USPTO will issue a certificate of correction reflecting the PTA determination noted above.

Patentee should be aware that in order to preserve the right to review in the United States District Court for the District of Columbia of the USPTO patent term adjustment determination, patentee must ensure that he or she also take the steps required under 35 U.S.C. 154(b)(4)(A) in a timely manner. Nothing in the request for recalculation should be construed as providing an alternative time frame for commencing a civil action under 35 U.S.C. 154(b)(4)(A).

Any questions concerning this decision should be directed to the Office of Patent Legal Administration at 571-272-7702.

UNITED STATES PATENT AND TRADEMARK OFFICE

COMMISSIONER FOR PATENTS
UNITED STATES PATENT AND TRADEMARK OFFICE
P.O. BOX 1450
ALEXANDRIA, VA 22313-1450
www.uspto.gov

MATTINGLY, STANGER, MALUR & BRUNDIDGE, P.C.
1800 DIAGONAL ROAD
SUITE 370
ALEXANDRIA, VA 22314

MAILED

NOV - 8 2005

Technology Center 2100

In re Application of SERIZAWA et al	:	
Application No.: 10/855,589	:	DECISION ON PETITION
Filing Date: May 28, 2004	:	FOR ACCELERATED
For: METHOD FOR DATA ACCESSING IN	:	EXAMINATION UNDER
A COMPUTER SYSTEM INCLUDING A	:	M.P.E.P. §708.02(VIII)
STORAGE SYSTEM	:	

This is a decision on the petition filed September 15, 2005 under 37 CFR §1.102(d) and M.P.E.P. §708.02(VIII): Accelerated Examination, to make the above-identified application special.

The petition is **GRANTED**.

M.P.E.P. §708.02, Section VIII, which sets out the prerequisites for a grantable petition for Accelerated Examination under 37 CFR §1.102(d), states in relevant part:

> A new application (one which has not received any examination by the examiner) may be granted special status provided that applicant (and this term includes applicant's attorney or agent) complies with each of the following items:
>
> (A) Submits a petition to make special accompanied by the fee set forth in 37 CFR 1.17(h);
>
> (B) Presents all claims directed to a single invention, or if the Office determines that all the claims presented are not obviously directed to a single invention, will make an election without traverse as a prerequisite to the grant of special status. The election may be made by applicant at the time of filing the petition for special status. Should applicant fail to include an election with the original papers or petition and the Office determines that a requirement should be made, the established telephone restriction practice will be followed. If otherwise proper, examination on the merits will proceed on claims drawn to the elected invention. If applicant refuses to make an election without traverse, the application will not be further examined at that time. The petition will be denied on the ground that the claims are not directed to a single invention, and the application will await action in its regular turn. Divisional applications directed to the nonelected inventions will not automatically be given special status based on papers filed with the petition in the parent application. Each such application must meet on its own all requirements for the new special status;

(C) Submits a statement(s) that a pre-examination search was made, listing the field of search by class and subclass, publication, Chemical Abstracts, foreign patents, etc. >The pre-examination search must be directed to the invention as claimed in the application for which special status is requested.< A search made by a foreign patent office satisfies this requirement >if the claims in the corresponding foreign application are of the same or similar scope to the claims in the U.S. application for which special status is requested<;

(D) Submits one copy each of the references deemed most closely related to the subject matter encompassed by the claims if said references are not already of record; and

(E) Submits a detailed discussion of the references, which discussion points out, with the particularity required by 37 CFR 1.111 (b) and (c), how the claimed subject matter is patentable over the references.

Because the petition filed September 15, 2005 meets the criteria set forth above, the petition to make special is **GRANTED**.

The application file is being forwarded to the Examiner for accelerated examination in accordance with M.P.E.P. §708.02, Section VIII. If the application is subsequently allowed, it will be given priority for printing. See M.P.E.P. §1309.

Pinchus M. Laufer
Special Programs Examiner
Technology Center 2100
Computer Architecture, Software, and Information Security
571-272-3599

UNITED STATES PATENT AND TRADEMARK OFFICE

Commissioner for Patents
United States Patent and Trademark Office
P.O. Box 1450
Alexandria, VA 22313-1450
www.uspto.gov

LITMAN LAW OFFICES, LTD.
P.O. BOX 15035
CRYSTAL CITY STATION
ARLINGTON VA 22215

COPY MAILED

OCT 18 2007

OFFICE OF PETITIONS

In re Application of :
Ortiz :
Application No. 10/855,613 : ON PETITION
Filed: May 28, 2004 :
Attorney Docket No. 24794.00 :
For: TOILET ASSEMBLY

This is a decision on the petition, filed July 13, 2007, under 37 CFR 1.137(b) to revive the above-identified application.

The above-identified application became abandoned for failure to timely submit a reply within three (3) months of the mailing of the October 13, 2006 final Office action. No response being received and no extensions of time being obtained, this application became abandoned on January 14, 2007. A Notice of Abandonment was mailed on June 11, 2007.

Applicant has submitted an amendment in reply to the October 13, 2006 final Office action that *prima facie* places this application in condition for allowance, a proper statement of the unintentional nature of the delay in responding to the October 13, 2006 final Office action, and the $750.00 petition fee.

The petition is **GRANTED**.

After the mailing of this decision the application will be forwarded to Technology Center AU 3751 for consideration of the amendment filed on July 13, 2007.

Telephone inquiries should be directed to the undersigned at (571) 272-3230.

Shirene Willis Brantley

Shirene Willis Brantley
Senior Petitions Attorney
Office of Petitions
Office of the Deputy Commissioner
for Patent Examination Policy

UNITED STATES PATENT AND TRADEMARK OFFICE

Commissioner for Patents
United States Patent and Trademark Office
P.O. Box 1450
Alexandria, VA 22313-1450
www.uspto.gov

NIXON & VANDERHYE, PC
901 NORTH GLEBE ROAD, 11TH FLOOR
ARLINGTON VA 22203

COPY MAILED

MAR 2 3 2007

OFFICE OF PETITIONS

In re Application of	:	
Maldonado et al.	:	DECISION ON PETITION
Application No. 10/855,628	:	TO WITHDRAW
Filed: May 28, 2004	:	FROM RECORD
Attorney Docket No. 2766-15	:	

This is a decision on the request to withdraw as attorney of record under 37 C.F.R. § 1.36, filed August 8, 2006.

The request is **NOT APPROVED**.

A grantable request to withdraw as attorney of record must be signed by every attorney seeking to withdraw or contain a clear indication that one attorney is signing on behalf of another/others. A request to withdraw will not be approved unless at least 30 (thirty) days would remain between the date of approval and the later of the expiration date of a time to file a response or the expiration date of the maximum time period which can be extended under 37 C.F.R. § 1.136(a).

The Office cannot approve the request at this time since the reason provided do not meet any of the conditions under the mandatory or permissive categories enumerated in 37 CFR 10.40. Section 10.40 of Title 37 of the Code of Federal Regulation states, "[a] practitioner shall not withdraw from employment in a proceeding before the Office without permission from the Office[.]" More specifically, 37 CFR 10.40 states, "[i]f paragraph (b) of this section is not applicable, a practitioner may not request permission to withdraw in matter pending before the Office unless such request or such withdrawal is" for one the permissive reasons listed in 37 CFR 10.40(c). The reason set forth in the request, "Representation has ended," does not meet any the conditions set forth in 37 CFR 10.40.

All future communications from the Office will continue to be directed to the above-listed address until otherwise notified by applicants.

Telephone inquires concerning this decision should be directed to the undersigned at 571-272-3206.

Liana Walsh
Petitions Examiner
Office of Petitions

Cc:

NICOLE FIORI
IGLOO PRODUCTS CORPORATION
777 IGLOO ROAD
KATY, TX 77494

UNITED STATES PATENT AND TRADEMARK OFFICE

Commissioner for Patents
United States Patent and Trademark Office
P.O. Box 1450
Alexandria, VA 22313-1450
www.uspto.gov

NIXON & VANDERHYE, PC
901 NORTH GLEBE ROAD, 11TH FLOOR
ARLINGTON VA 22203

COPY MAILED

JUN 0 4 2007

OFFICE OF PETITIONS

In re Application of	:	DECISION ON PETITION
Maldonado et al.	:	TO WITHDRAW
Application No. 10/855,628	:	FROM RECORD
Filed: May 28, 2004	:	
Attorney Docket No. 2766-15	:	

This is a decision on the renewed Request to Withdraw as attorney or agent of record under 37 C.F.R. § 1.36(b), filed March 26, 2007.

The request is **APPROVED**.

A grantable request to withdraw as attorney/agent of record must be signed by every attorney/agent seeking to withdraw or contain a clear indication that one attorney is signing on behalf of another/others. A request to withdraw will not be approved unless at least 30 (thirty) days would remain between the date of approval and the later of the expiration date of a time to file a response or the expiration date of the maximum time period which can be extended under 37 C.F.R. § 1.136(a).

The request was signed by Michelle N. Lester on behalf of all attorneys of record who are associated with Customer Number 23117. All attorneys/agents associated with that customer number have been withdrawn. Applicants are reminded that there is no attorney of record at this time.

The request to change the correspondence of record is not acceptable as the requested correspondence address is not that of: (1) the first named inventor; or (2) the assignee of the entire interest who has previously taken action in the application. All future communications from the Office will continue to be directed to the first named inventor at the first below-listed address until otherwise properly notified.

There is an outstanding Office action mailed April 13, 2007 that requires a reply.

Telephone inquires concerning this decision should be directed to the undersigned at (571) 272-3206. All other inquires concerning either the examination or status of the application should be directed to the Technology Center.

Liana Walsh
Petitions Examiner
Office of Petitions

Cc:

JOHN MALDONADO
1603 MONARCH BEACH DRIVE
KATY, TX 77494

NICOLE FIORI
IGLOO PRODUCTS CORPORATION
777 IGLOO ROAD
KATY, TX 77494

UNITED STATES PATENT AND TRADEMARK OFFICE

COMMISSIONER FOR PATENTS
UNITED STATES PATENT AND TRADEMARK OFFICE
P.O. BOX 1450
ALEXANDRIA, VA 22313-1450
www.uspto.gov

MAILED
FROM DIRECTORS OFFICE

MAR 16 2005

TECHNOLOGY CENTER 3600

YOUNG & THOMPSON
745 South 23rd Street
2nd Floor
Arlington, VA 22202

In re application of	:	**DECISION ON PETITION**
Christian Thoma	:	**TO MAKE SPECIAL**
Application No. 10/855,629	:	**(ACCELERATED**
Filed: May 28, 2004	:	**EXAMINATION)**
For: HEAT GENERATOR		

This is in response to the petition filed on May 28, 2004 to make the above-identified application special on the basis of special examining procedure for certain new applications - accelerated examination as set forth in MPEP § 708.02 VIII.

The requirements for granting special status under this section are: (A) a petition to make special accompanied by the fee set forth in 37 CFR 1.17(i); (B) all claims being directed to a single invention, or an election without traverse if the Office determines that all the claims are not directed to a single invention; (C) a statement that a pre-examination search was made listing the field of search; (D) one copy of each of the references deemed most closely related to the subject matter encompassed by the claims if said references are not already of record; and (E) a detailed discussion of how the claimed subject matter is patentable over the references in accordance with 37 CFR 1.111 (b) and (c).

The petition fails to adequately meet requirement (B) above.

With regard to condition (B) the petition has failed to include an election without traverse or a statement that applicant will elect without traverse should a restriction or election be required.

For the above stated reason, the petition is **DISMISSED**.

Petitioner is given one more opportunity to perfect the petition. Any request for reconsideration must be filed within TWO MONTHS of the date of this decision. Extensions of time under 37 CFR 1.136(a) are permitted.

Applicant should promptly submit a renewed petition to the Commissioner of Patents and Trademarks, Washington, D.C. 20231. The envelope should indicate that the correspondence be brought to the attention of Technology Center 3600.

Until the renewed petition is submitted, the application will be returned to the examiner's docket to await treatment on the merits in the normal order of examination.

Kenneth J. Dorner
Special Programs Examiner
Technology Center 3600
(703) 308-0866

KJD/jwk: 2/8/05

UNITED STATES PATENT AND TRADEMARK OFFICE

UNITED STATES DEPARTMENT OF COMMERCE
United States Patent and Trademark Office
Address: COMMISSIONER FOR PATENTS
P.O. Box 1450
Alexandria, Virginia 22313-1450
www.uspto.gov

MICROSOFT CORPORATION
ONE MICROSOFT WAY
REDMOND, WA 98052

Mail Date: 04/21/2010

Applicant	: Jerry K. Koh	: DECISION ON REQUEST FOR
Patent Number	: 7660871	: RECALCULATION of PATENT
Issue Date	: 02/09/2010	: TERM ADJUSTMENT IN VIEW
Appliction No	: 10/855,631	: OF WYETH AND NOTICE OF INTENT TO
Filed	: 05/28/2004	: ISSUE CERTIFICATE OF CORRECTION
		:

The Request for Recalculation is **GRANTED** to the extent indicated.

The patent term adjustment has been determined to be **1312** days. The USPTO will *sua sponte* issue a certificate of correction reflecting the amount of PTA days determined by the recalculation.

Prior to the issuance of the certificate of correction, the USPTO will afford patentee an opportunity to be heard and request reconsideration. Accordingly, patentee has **one month or thirty (30) days**, whichever is longer, to file a request for reconsideration of this patent term adjustment calculation. See 35 U.S.C. 154(b)(3)(B)(ii) and 37 CFR 1.322(a)(4). No extensions of time will be granted under 37 CFR 1.136.

Patentee should use document code PET.OP if electronically filing a request for reconsideration of this patent term adjustment calculation. The patentee must also include the information required by 37 CFR 1.705(b)(2) and the fee required by 37 CFR 1.18(e). If patentee does not file a timely request for reconsideration of this patent term adjustment calculation including the information required by 37 CFR 1.705(b)(2) and the fee required by 37 CFR 1.18(e), the USPTO will issue a certificate of correction reflecting the PTA determination noted above.

Patentee should be aware that in order to preserve the right to review in the United States District Court for the District of Columbia of the USPTO patent term adjustment determination, patentee must ensure that he or she also take the steps required under 35 U.S.C. 154(b)(4)(A) in a timely manner. Nothing in the request for recalculation should be construed as providing an alternative time frame for commencing a civil action under 35 U.S.C. 154(b)(4)(A).

Any questions concerning this decision should be directed to the Office of Patent Legal Administration at 571-272-7702.

UNITED STATES PATENT AND TRADEMARK OFFICE

Commissioner for Patents
United States Patent and Trademark Office
P.O. Box 1450
Alexandria, VA 22313-1450
www.uspto.gov

COPY MAILED
NOV 2 0 2006
OFFICE OF PETITIONS

NIXON & VANDERHYE, PC
901 NORTH GLEBE ROAD, 11TH FLOOR
ARLINGTON VA 22203

In re Application of

Ann Hanson
Application No. 10/855,632
Filed: May 28, 2004
Attorney Docket No. 2766-13

DECISION ON PETITION
TO WITHDRAW
FROM RECORD

This is a decision on the Request to Withdraw as attorney or agent of record under 37 C.F.R. § 1.36(b), filed August 8, 2006.

The request is **NOT APPROVED**.

A grantable request to withdraw as attorney/agent of record must be signed by every attorney/agent seeking to withdraw or contain a clear indication that one attorney is signing on behalf of another/others. A request to withdraw will not be approved unless at least 30 (thirty) days would remain between the date of approval and the later of the expiration date of a time to file a response or the expiration date of the maximum time period which can be extended under 37 C.F.R. § 1.136(a).

The Office cannot approve the request at this time since the reasons provided do not meet any of the conditions under the mandatory or permissive categories enumerated in 37 CFR 10.40. Section 10.40 of Title 37 of the Code of Federal Regulation states, "[a] practitioner shall not withdraw from employment in a proceeding before the Office without permission from the Office[.]" More specifically, 37 CFR 10.40 states, "[i]f paragraph (b) of this section is not applicable, a practitioner may not request permission to withdraw in matter pending before the Office unless such request or such withdrawal is" for one the permissive reasons listed in 37 CFR 10.40(c). The reasons set forth in the request, ***representation has ended***, do not meet any the conditions set forth in 37 CFR 10.40.

All future communications from the Office will continue to be directed to the above-listed address until otherwise notified by applicant.

Telephone inquiries concerning this decision should be directed to Terri Williams at 571-272- 571-272-2991.

Terri Williams
Petitions Examiner
Office of Petitions

cc: **Nicole Fiori**
Igloo Products Corporation
777 Igloo Road
Katy, TX 77494

UNITED STATES PATENT AND TRADEMARK OFFICE

Commissioner for Patents
United States Patent and Trademark Office
P.O. Box 1450
Alexandria, VA 22313-1450
www.uspto.gov

Nixon & Vanderhye, PC
901 North Glebe Road, 11th Floor
Arlington, VA 22203

COPY MAILED

JUL 19 2007

OFFICE OF PETITIONS

In re Application of	:	
Ann Hanson	:	
Application No. 10/855,632	:	DECISION ON PETITION
Filed: May 28, 2004	:	TO WITHDRAW
Attorney Docket No. 2766-13	:	FROM RECORD
	:	

This is a decision on the Request to Withdraw as attorney or agent of record under 37 C.F.R. § 1.36(b), filed November 22, 2006.

The request is **APPROVED**.

A grantable request to withdraw as attorney/agent of record must be signed by every attorney/agent seeking to withdraw or contain a clear indication that one attorney is signing on behalf of another/others. A request to withdraw will not be approved unless at least 30 (thirty) days would remain between the date of approval and the later of the expiration date of a time to file a response or the expiration date of the maximum time period which can be extended under 37 C.F.R. § 1.136(a).

The request was signed by Michelle N. Lester on behalf of all attorneys of record.

All attorneys/agents have been withdrawn.

Applicant is reminded that there is no attorney of record at this time.

The request to change the correspondence of record is not acceptable as the requested correspondence address is not that of: (1) the first named signing inventor; or (2) an intervening assignee of the entire interest under 37 C.F.R 3.71. All future communications from the Office will be directed to the first named signing inventor at the first copied address below until otherwise properly notified by the applicant.

There is no outstanding Office action at this time.

Telephone inquiries concerning this decision should be directed to Terri Williams at 571-272-2991.

T. Williams

Terri Williams
Petitions Examiner
Office of Petitions

cc: **Ann Hanson**
935 North State Road
Ionia, MI 48846

cc: **Nicole Fiori**
Igloo Products Corporation
777 Igloo Road
Katy, TX 77494

UNITED STATES PATENT AND TRADEMARK OFFICE

Commissioner for Patents
United States Patent and Trademark Office
P.O. Box 1450
Alexandria, VA 22313-1450
www.uspto.gov

JJGJR.: 08-06

Paper No: __

WAGNER, MURABITO
& HAO, LLP
TWO NORTH MARKET STREET
/THIRD FLOOR
SAN JOSE CA 95113

COPY MAILED

AUG 17 2006

OFFICE OF PETITIONS

In re Application of	:	
Segal, et al.	:	
Application No. 10/855,667	:	DECISION
Filing Date: 26 May, 2004	:	
Attorney Docket No.: RESH-P010	:	

This is a decision on the petition filed on 6 April, 2006, alleging unintentional delay under 37 C.F.R. §1.137(b).

For the reasons set forth below, the petition under 37 C.F.R.§1.137(b) is **GRANTED**.

BACKGROUND

The record reflects that:

- Petitioner failed to reply timely and properly to the Notice of Allowance/Allowability and Fees Due and Notice of Allowability mailed on 4 November, 2005, with reply due under a non-extendable deadline on or before 6 February, 2006;

- the instant application went abandoned after midnight 6 February, 2006;

- the Office mailed a Notice of Abandonment on 28 March, 2006;
- on 6 April, 2006, Petitioner filed the instant petition (with fee) and the reply in the form of fees due, and made the statement of unintentional delay.

Out of an abundance of caution, Petitioners always are reminded that those registered to practice *and* all others who make representations before the Office are reminded to inquire into the underlying facts of representations made to the Office and support averments with the appropriate documentation–since all owe to the Office the continuing duty to disclose.[1]

---

[1] See supplement of 17 June, 1999. The Patent and Trademark Office is relying on petitioner's duty of candor and good faith and accepting a statement made by Petitioner. See Changes to Patent Practice and Procedure, 62 Fed. Reg. at 53160 and 53178, 1203 Off. Gaz. Pat. Office at 88 and 103 (responses to comments 64 and 109)(applicant obligated under 37 C.F.R. §10.18 to inquire into the underlying facts and circumstances when providing statements to the Patent and Trademark Office).

Specifically, the regulations at 37 C.F.R. §10.18 provide:

§ 10.18 Signature and certificate for correspondence filed in the Patent and Trademark Office.
(a) For all documents filed in the Office in patent, trademark, and other non-patent matters, except for correspondence that is required to be signed by the applicant or party, each piece of correspondence filed by a practitioner in the Patent and Trademark Office must bear a signature by such practitioner complying with the provisions of §1.4(d), §1.4(e), or § 2.193(c)(1) of this chapter.
(b) By presenting to the Office (whether by signing, filing, submitting, or later advocating) any paper, the party presenting such paper, whether a practitioner or non-practitioner, is certifying that—

(1) All statements made therein of the party's own knowledge are true, all statements made therein on information and belief are believed to be true, and all statements made therein are made with the knowledge that whoever, in any matter within the jurisdiction of the Patent and Trademark Office, knowingly and willfully falsifies, conceals, or covers up by any trick, scheme, or device a material fact, or makes any false, fictitious or fraudulent statements or representations, or makes or uses any false writing or document knowing the same to contain any false, fictitious or fraudulent statement or entry, shall be subject to the penalties set forth under 18 U.S.C. 1001, and that violations of this paragraph may jeopardize the validity of the application or document, or the validity or enforceability of any patent, trademark registration, or certificate resulting therefrom; and

(2) To the best of the party's knowledge, information and belief, formed after an inquiry reasonable under the circumstances, that —

(i) The paper is not being presented for any improper purpose, such as to harass someone or to cause unnecessary delay or needless increase in the cost of prosecution before the Office;

(ii) The claims and other legal contentions therein are warranted by existing law or by a nonfrivolous argument for the extension, modification, or reversal of existing law or the establishment of new law;

(iii) The allegations and other factual contentions have evidentiary support or, if specifically so identified, are likely to have evidentiary support after a reasonable opportunity for further investigation or discovery; and

(iv) The denials of factual contentions are warranted on the evidence, or if specifically so identified, are reasonably based on a lack of information or belief.

(c) Violations of paragraph (b)(1) of this section by a practitioner or non-practitioner may jeopardize the validity of the application or document, or the validity or enforceability of any patent, trademark registration, or certificate resulting therefrom. Violations of any of paragraphs (b)(2)(i) through (iv) of this section are, after notice and reasonable opportunity to respond, subject to such sanctions as deemed appropriate by the Commissioner, or the Commissioner's designee, which may include, but are not limited to, any combination of —

(1) Holding certain facts to have been established;
(2) Returning papers;
(3) Precluding a party from filing a paper, or presenting or contesting an issue;
(4) Imposing a monetary sanction;
(5) Requiring a terminal disclaimer for the period of the delay; or
(6) Terminating the proceedings in the Patent and Trademark Office.

(d) Any practitioner violating the provisions of this section may also be subject to disciplinary action. See § 10.23(c)(15).
[Added 50 FR 5175, Feb. 6, 1985, effective Mar. 8, 1985; para. (a) revised, 58 FR 54494, Oct. 22, 1993, effective Nov. 22, 1993; paras. (a) & (b) revised, paras. (c) & (d) added, 62 FR 53131, Oct. 10, 1997, effective Dec. 1, 1997; para. (a) revised, 69 FR 56481, Sept. 21, 2004, effective Oct. 21, 2004]

STATUTES, REGULATIONS AND ANALYSIS

Congress has authorized the Commissioner to "revive an application if the delay is shown to the satisfaction of the Commissioner to have been "unavoidable." 35 U.S.C. §133 (1994).[2]

The regulations at 37 C.F.R. §1.137(a) and (b) set forth the requirements for a petitioner to revive a previously unavoidably or unintentionally, respectively, abandoned application under this congressional grant of authority. The language of 35 U.S.C. §133 and 37 C.F.R. §1.137(a) is clear, unambiguous, and without qualification: the delay in tendering the reply to the outstanding Office action, as well as filing the first petition seeking revival, must have been unavoidable for the reply now to be accepted on petition.[3]

Delays in responding properly raise the question whether delays are unavoidable.[4] Where there is a question whether the delay was unavoidable, Petitioners must meet the burden of establishing that the delay was unavoidable within the meaning of 35 U.S.C. §133 and 37 C.F.R. §1.137(a).[5] And the Petitioner must be diligent in attending to the matter.[6] Failure to do so does not constitute the care required under Pratt,[7] and so cannot satisfy the test for diligence and due care.

(By contrast, unintentional delays are those that do not satisfy the very strict statutory and regulatory requirements of unavoidable delay, and also, by definition, are not intentional.[8]))

---

[2] 35 U.S.C. §133 provides:
35 U.S.C. §133 Time for prosecuting application.
Upon failure of the applicant to prosecute the application within six months after any action therein, of which notice has been given or mailed to the applicant, or within such shorter time, not less than thirty days, as fixed by the Commissioner in such action, the application shall be regarded as abandoned by the parties thereto, unless it be shown to the satisfaction of the Commissioner that such delay was unavoidable.

[3] Therefore, by example, an unavoidable delay in the payment of the Filing Fee might occur if a reply is shipped by the US Postal Service, but due to catastrophic accident, the delivery is not made.

[4] See: *Changes to Patent Practice and Procedure*; *Final Rule Notice*, 62 *Fed. Reg.* at 53158-59 (October 10, 1997), 1203 *Off. Gaz. Pat. Office* at 86-87 (October 21, 1997).

[5] See: In re Application of G, 11 USPQ2d 1378, 1380 (Comm'r Pats. 1989).

[6] See: Diligence in Filing Petitions to Revive and Petitions to Withdraw the Holding of Abandonment, 1124 Off. Gaz. Pat. Office 33 (March 19, 1991). It was and is Petitioner's burden to exercise diligence in seeking either to have the holding of abandonment withdrawn or the application revived. See 1124 Off. Gaz. Pat. Office supra.

[7] The test of diligence in the prosecution of an application before the Commissioner is, in the context of ordinary human affairs, the test is such care as is generally used and observed by prudent and careful persons in relation to their most important business. Ex parte Pratt, 1887 Dec. Comm'r Pat. 31 (Comm'r Pat. 1887); Ex parte Henrich, 1913 Dec. Comm'r Pat. 139, 141 (Comm'r. Pat. 1913).

[8] Therefore, by example, an unintentional delay in the reply might occur if the reply and transmittal form are to be prepared for shipment by the US Postal Service, but other pressing matters distract one's attention and the mail is not timely deposited for shipment.

As to the Allegation
of Unintentional Delay

The requirements for a grantable petition under 37 C.F.R. §1.137(b) are the petition and fee, a statement/showing of unintentional delay, a proper reply, and–where appropriate--a terminal disclaimer and fee.

It appears that Petitioner has satisfied the requirements of the regulation.

CONCLUSION

The petition under 37 C.F.R. §1.137(b) hereby is **granted**.

The instant application is released to Publications Branch to be processed into a patent in due course.

While telephone inquiries regarding this decision may be directed to the undersigned at (571) 272-3214, it is noted that all practice before the Office is in writing (see: 37 C.F.R. §1.2[9]) and the proper authority for action on any matter in this regard are the statutes (35 U.S.C.), regulations (37 C.F.R.) and the commentary on policy (MPEP). Therefore, no telephone discussion may be controlling or considered authority for Petitioner's action(s).

John J. Gillon, Jr.
Senior Attorney
Office of Petitions

---

[9] The regulations at 37 C.F.R. §1.2 provide:
§1.2 Business to be transacted in writing.
All business with the Patent and Trademark Office should be transacted in writing.The personal attendance of applicants or their attorneys or agents at the Patent and Trademark Office is unnecessary. The action of the Patent and Trademark Office will be based exclusively on the written record in the Office. No attention will be paid to any alleged oral promise, stipulation,or understanding in relation to which there is disagreement or doubt.

UNITED STATES PATENT AND TRADEMARK OFFICE

UNITED STATES DEPARTMENT OF COMMERCE
United States Patent and Trademark Office
Address: COMMISSIONER FOR PATENTS
P.O. Box 1450
Alexandria, Virginia 22313-1450
www.uspto.gov

APPL NO.	FILING OR 371 (c) DATE	ART UNIT	FIL FEE REC'D	ATTY.DOCKET NO	DRAWINGS	TOT CLMS	IND CLMS
10/855,696	05/26/2004	2121	450	SENS.014US0	7	20	3

CONFIRMATION NO. 8907

CORRECTED FILING RECEIPT

OC000000017306978

36257
PARSONS HSUE & DE RUNTZ LLP
595 MARKET STREET
SUITE 1900
SAN FRANCISCO, CA 94105

Date Mailed: 10/21/2005

Receipt is acknowledged of this regular Patent Application. It will be considered in its order and you will be notified as to the results of the examination. Be sure to provide the U.S. APPLICATION NUMBER, FILING DATE, NAME OF APPLICANT, and TITLE OF INVENTION when inquiring about this application. Fees transmitted by check or draft are subject to collection. Please verify the accuracy of the data presented on this receipt. **If an error is noted on this Filing Receipt, please mail to the Commissioner for Patents P.O. Box 1450 Alexandria Va 22313-1450. Please provide a copy of this Filing Receipt with the changes noted thereon. If you received a "Notice to File Missing Parts" for this application, please submit any corrections to this Filing Receipt with your reply to the Notice. When the USPTO processes the reply to the Notice, the USPTO will generate another Filing Receipt incorporating the requested corrections (if appropriate).**

Applicant(s)

James R. Barnett JR., Austin, TX;
Mark K. Ekblad, San Jose, CA;
Jeffrey M. Parker, Cedar Park, TX;

Power of Attorney: The patent practitioners associated with Customer Number **36257**.

Domestic Priority data as claimed by applicant

Foreign Applications

If Required, Foreign Filing License Granted: 07/28/2004

The country code and number of your priority application, to be used for filing abroad under the Paris Convention, is US10/855,696

Projected Publication Date: 12/01/2005

Non-Publication Request: No

Early Publication Request: No

**** SMALL ENTITY ****

Title

Process module tuning

Preliminary Class

700

PROTECTING YOUR INVENTION OUTSIDE THE UNITED STATES

Since the rights granted by a U.S. patent extend only throughout the territory of the United States and have no effect in a foreign country, an inventor who wishes patent protection in another country must apply for a patent in a specific country or in regional patent offices. Applicants may wish to consider the filing of an international application under the Patent Cooperation Treaty (PCT). An international (PCT) application generally has the same effect as a regular national patent application in each PCT-member country. The PCT process **simplifies** the filing of patent applications on the same invention in member countries, but **does not result** in a grant of "an international patent" and does not eliminate the need of applicants to file additional documents and fees in countries where patent protection is desired.

Almost every country has its own patent law, and a person desiring a patent in a particular country must make an application for patent in that country in accordance with its particular laws. Since the laws of many countries differ in various respects from the patent law of the United States, applicants are advised to seek guidance from specific foreign countries to ensure that patent rights are not lost prematurely.

Applicants also are advised that in the case of inventions made in the United States, the Director of the USPTO must issue a license before applicants can apply for a patent in a foreign country. The filing of a U.S. patent application serves as a request for a foreign filing license. The application's filing receipt contains further information and guidance as to the status of applicant's license for foreign filing.

Applicants may wish to consult the USPTO booklet, "General Information Concerning Patents" (specifically, the section entitled "Treaties and Foreign Patents") for more information on timeframes and deadlines for filing foreign patent applications. The guide is available either by contacting the USPTO Contact Center at 800-786-9199, or it can be viewed on the USPTO website at http://www.uspto.gov/web/offices/pac/doc/general/index.html.

For information on preventing theft of your intellectual property (patents, trademarks and copyrights), you may wish to consult the U.S. Government website, http://www.stopfakes.gov. Part of a Department of Commerce initiative, this website includes self-help "toolkits" giving innovators guidance on how to protect intellectual property in specific countries such as China, Korea and Mexico. For questions regarding patent enforcement issues, applicants may call the U.S. Government hotline at 1-866-999-HALT (1-866-999-4158).

LICENSE FOR FOREIGN FILING UNDER
Title 35, United States Code, Section 184
Title 37, Code of Federal Regulations, 5.11 & 5.15

GRANTED

The applicant has been granted a license under 35 U.S.C. 184, if the phrase "IF REQUIRED, FOREIGN FILING LICENSE GRANTED" followed by a date appears on this form. Such licenses are issued in all applications where the conditions for issuance of a license have been met, regardless of whether or not a license may be required as set forth in 37 CFR 5.15. The scope and limitations of this license are set forth in 37 CFR 5.15(a) unless an earlier license has been issued under 37 CFR 5.15(b). The license is subject to revocation upon written notification. The date indicated is the effective date of the license, unless an earlier license of similar scope has been granted under 37 CFR 5.13 or 5.14.

This license is to be retained by the licensee and may be used at any time on or after the effective date thereof unless it is revoked. This license is automatically transferred to any related applications(s) filed under 37 CFR 1.53(d). This license is not retroactive.

The grant of a license does not in any way lessen the responsibility of a licensee for the security of the subject matter as imposed by any Government contract or the provisions of existing laws relating to espionage and the national security or the export of technical data. Licensees should apprise themselves of current regulations especially with respect to certain countries, of other agencies, particularly the Office of Defense Trade Controls, Department of State (with respect to Arms, Munitions and Implements of War (22 CFR 121-128)); the Bureau of Industry and Security, Department of Commerce (15 CFR parts 730-774); the Office of Foreign Assets Control, Department of Treasury (31 CFR Parts 500+) and the Department of Energy.

NOT GRANTED

No license under 35 U.S.C. 184 has been granted at this time, if the phrase "IF REQUIRED, FOREIGN FILING LICENSE GRANTED" DOES NOT appear on this form. Applicant may still petition for a license under 37 CFR 5.12, if a license is desired before the expiration of 6 months from the filing date of the application. If 6 months has lapsed from the filing date of this application and the licensee has not received any indication of a secrecy order under 35 U.S.C. 181, the licensee may foreign file the application pursuant to 37 CFR 5.15(b).

UNITED STATES PATENT AND TRADEMARK OFFICE

Commissioner for Patents
United States Patent and Trademark Office
P.O. Box 1450
Alexandria, VA 22313-1450
www.uspto.gov

VERTEX PHARMACEUTICALS INC.
130 WAVERLY STREET
CAMBRIDGE, MA 02139-4242

COPY MAILED

SEP 0 4 2007

OFFICE OF PETITIONS

In re Application of	:	
Guy Brenchley, et al.	:	
Application No. 10/855,699	:	DECISION ON PETITION
Filed: May 27, 2004	:	
Attorney Docket No. VPI/03-121 US	:	

This is a decision on the petition under the unintentional provisions of 37 CFR 1.137(b), filed May 1, 2007, to revive the above-identified application.

The petition is **GRANTED**.

The application became abandoned for failure to reply in a timely manner to the Restriction Requirement, mailed September 27, 2006, which set a shortened statutory period for reply of one (1) month or thirty (30) days (whichever is later). No extensions of time under the provisions of 37 CFR 1.136(a) were obtained. Accordingly, the application became abandoned on October 28, 2007.

The petition satisfies the requirements of 37 CFR 1.137(b) in that petitioner has supplied (1) the reply in the form of an election with an amendment, (2) the petition fee of $1500; and (3) a proper statement of unintentional delay.

Telephone inquiries concerning this decision should be directed to undersigned at (571) 272-1642.

This application is being referred to Technology Center AU 1625 for appropriate action by the Examiner in the normal course of business on the reply received May 1, 2007.

April M. Wise
Petitions Examiner
Office of Petitions

UNITED STATES PATENT AND TRADEMARK OFFICE

Commissioner for Patents
United States Patent and Trademark Office
P.O. Box 1450
Alexandria, VA 22313-1450
www.uspto.gov

NATH & ASSOCIATES
1030 15th STREET, NW
6TH FLOOR
WASHINGTON, DC 20005

COPY MAILED

FEB 1 6 2005

OFFICE OF PETITIONS

In re Application of
Capote et al.
Application No. 10/855,708
Filed: May 28, 2004
Attorney Docket No. 90034YY

Decision on Petition

This is a decision on the petition filed November 16, 2004, which is being treated as a petition under 37 CFR 1.53(e)(2), to establish that pages 32 and 33 of the specification were part of the originally filed application.

The application was filed on May 28, 2004. On October 18, 2004, a Notice was mailed stating that pages 32 and 33 of the specification did not appear to be included as part of the application filed.

The present petition alleges that pages 32 and 33 were deposited on May 28, 2004. In support, petitioner has submitted a postcard receipt which acknowledges receipt of 39 pages of textual specification on May 28, 2004.[1]

The USPTO file for this application includes only 37 pages of specification and does not include pages 32 or 33. Based on a review of all the evidence, the Office concludes the missing pageswere part of the application but were later misplaced. Therefore, the petition is **granted**.

The petition fee of $130 will be credited to petitioner's deposit account.

The Notice mailed October 18, 2004 was sent in error and is hereby vacated.

The Office of Initial Patent Examination will further process the application with a filing date of May 28, 2004, using the application papers filed on May 28, 2004, and the copy of pages 32 and 33 of the specification filed on November 16, 2004.

Telephone inquiries should be directed to Petitions Attorney Steven Brantley at (571) 272-3203.

Charles Steven Brantley
Petitions Attorney
Office of Petitions

---

[1] Evidence of receipt of any correspondence filed in the Patent and Trademark Office can be obtained by submitting a self addressed post card properly itemizing and identifying the paper or papers being filed. Upon receipt of the correspondence, the Patent and Trademark Office will check the listing on the post card against the papers submitted, making sure that all items listed are present and will then stamp the postcard with an Official date stamp and place the post card in the outgoing mail. "A post card receipt which itemizes and properly identifies the papers which are being filed serves as *prima facie* evidence of receipt in the PTO of all items listed thereon by the PTO." M.P.E.P. § 503.

UNITED STATES PATENT AND TRADEMARK OFFICE

Commissioner for Patents
United States Patent and Trademark Office
P.O. Box 1450
Alexandria, VA 22313-1450
www.uspto.gov

BANNER & WITCOFF
1001 G STREET N W
SUITE 1100
WASHINGTON DC 20001

COPY MAILED

MAY 0 2 2006

OFFICE OF PETITIONS

In re Application of	:	
Shaw et al.	:	DECISION ON PETITION
Application No. 10/855,717	:	TO WITHDRAW
Filed: May 28, 2004	:	FROM RECORD
Attorney Docket No. 003150.00007	:	

This is a decision on the Request to Withdraw as attorney or agent of record under 37 C.F.R. § 1.36(b), filed July 8, 2005.

The request is **NOT APPROVED** as moot.

A review of the file record indicates that Customer Number 22907 has been updated and Brian E. Hanlon has been removed as attorney of record. Accordingly, the request to withdraw under 37 C.F.R. § 1.36(b) is moot.

All future communications from the Office will continue to be directed to the above-listed address until otherwise notified by applicant.

Telephone inquires concerning this decision should be directed to Petitions Examiner Liana Chase at 571-272- 3206.

David Bucci
Petitions Examiner
Office of Petitions

UNITED STATES PATENT AND TRADEMARK OFFICE

Commissioner for Patents
United States Patent and Trademark Office
P.O. Box 1450
Alexandria, VA 22313-1450
www.uspto.gov

COPY MAILED

JUL 20 2009

OFFICE OF PETITIONS

FINNEGAN, HENDERSON, FARABOW,
GARRETT & DUNNER LLP
901 NEW YORK AVENUE, NW
WASHINGTON DC 20001-4413

In re Patent No. 7,419,664
Issued: September 2, 2008
Application No. 10/855,745
Filed: May 27, 2004
Dkt. No.: 08702.0140-00000

: ON PETITIONS under
: 37 CFR 1.183 and ON REQUEST
: FOR RECONSIDERATION OF
: PATENT TERM ADJUSTMENT
:

This is a decision on the 1) Petition under 37 C.F.R. 1.183, requesting that the Office suspend the rules and consider on the merits a Request for Reconsideration of Patent Term Adjustment under 37 C.F.R. 1.705(d) filed more than two months from the date the above-referenced patent issued; and on the 2) Request for Determination of Patent Term Adjustment – Post Grant, both filed on November 7, 2008.

The petition under 37 CFR 1.183 is **dismissed**.

The request for reconsideration of patent term adjustment under 37 CFR 1.705(d) is **dismissed as untimely filed**.

Any request for reconsideration, whether directed to the decision on petition under 37 CFR 1.183 or to the decision on application for patent term adjustment under 37 CFR 1.705(d), must be filed within two months of the mailing date of this decision. Extensions of time under 37 CFR 1.136 are not permitted. See § 1.181(f).

BACKGROUND

On September 2, 2008, the above-identified application matured into U.S. Patent No. 7,419,664, with a revised patent term adjustment of 526 days. No request for reconsideration of the patent term adjustment indicated in the patent was filed within two months of the date the patent issued. Patentee now petitions under 37 C.F.R. § 1.183 to (i) suspend or waive the requirement of 37 C.F.R. § 1.705(d) that a Request for Reconsideration of Patent Term Adjustment be filed within two months of the date the patent issued; and (ii) consider the enclosed Request for Reconsideration of Patent Term Adjustment. Patentee references the recent decision in Wyeth v. Dudas, No. 07-1492 (D.D.C. Sept. 30, 2008) as the basis for the petition.

ON PETITION UNDER 37 CFR 1.183
TO WAIVE THE TWO-MONTH REQUIREMENT OF 37 CFR 1.705(d)

The above-referenced patent issued on September 2, 2008. A request for reconsideration of the patent term adjustment indicated in the patent was not filed until November 7, 2008. Petitioner requests that the Office suspend the rules and consider on the merits the Request for Reconsideration of Patent Term Adjustment under 37 C.F.R. 1.705(d) even though it was untimely filed more than two months from the date the patent issued.

The relevant regulation, 37 CFR 1.705(d), provides that:

> If there is a revision to the patent term adjustment indicated in the notice of allowance, the patent will indicate the revised patent term adjustment. If the patent indicates or should have indicated a revised patent term adjustment, *any request for reconsideration of the patent term adjustment indicated in the patent must be filed within two months of the date the patent issued* and must comply with the requirements of paragraphs (b)(1) and (b)(2) of this section. Any request for reconsideration under this section that raises issues that were raised, or could have been raised, in an application for patent term adjustment under paragraph (b) of this section shall be dismissed as untimely as to those issues. (*emphasis* added).

By the express provisions of 37 CFR 1.705(d), a request for reconsideration of patent term adjustment must be filed within two months of the date the patent issued. It is undisputed that no such request for reconsideration was filed by November 2, 2008, the date two months from the date this patent issued, September 2, 2008. Rather, on November 7, 2008, after the issuance of a decision in Wyeth v. Dudas on September 30, 2008, petitioner filed the instant request for waiver of the two-month requirement.

37 CFR 1.183 provides that:

> In an extraordinary situation, when justice requires, any requirement of the regulations in this part which is not a requirement of the statutes may be suspended or waived by the Director or the Director's designee, *sua sponte*, or on petition of the interested party, subject to such other requirements as may be imposed. Any petition under this section must be accompanied by the petition fee set forth in § 1.17(f).

35 U.S.C. 154, which requires the Office to provide the applicant one opportunity to request reconsideration of any patent term adjustment determination made by the Director, authorizes the Director to establish the procedures for requesting such reconsideration. Those procedures[1]

---

[1] 35 U.S.C. § 154(b)(3) provides that the USPTO shall: (1) prescribe regulations establishing procedures for the application for and determination of patent term adjustments under 35 U.S.C. § 154(b); (2) make a determination of any patent term adjustment under 35 U.S.C. § 154(b) and

include, pursuant to 37 CFR 1.705(d), setting a two-month period for filing a request for reconsideration of the revised patent term adjustment indicated in the patent.

Having considered petitioner's arguments, it is concluded that waiver of the two-month requirement is not warranted. The primary basis for requesting waiver set forth by petitioner is "the extraordinary situation presented by the recent decision in Wyeth v. Dudas, No. 07-1492 (D.D.C. Sept. 30, 2008)." Specifically, petitioner states that in Wyeth, the U.S. District Court for the District of Columbia held that contrary to USPTO practice, a patentee is entitled to Patent Term Adjustment credit for examination delay under 37 CFR 1.702(b) in addition to any examination delay under 37 CFR 1.702(a), to the extent that the two periods of delay "do not occur on the same calendar day or days."

Petitioner has not explained why it could not have filed a Request for Reconsideration of Patent Term Adjustment within two months of the date the above-referenced patent issued. Apparently, petitioner's argument is that the basis for the Request for Reconsideration of Patent Term Adjustment is the Wyeth decision, which was entered after the issuance of their patent.

The fact that any relief ultimately granted in Wyeth would benefit patentee had they timely filed a request for reconsideration does not make the situation extraordinary. Wyeth followed the procedure set forth in 37 CFR 1.705 for requesting reconsideration of the patent term adjustment determination. Then, pursuant to 35 U.S.C. 154(b)(4)(A), Wyeth timely filed a complaint in District Court seeking judicial review of the Office's decision. A Memorandum Opinion and Order, the Wyeth decision of September 30, 2008, directed to the parties involved was issued.

Petitioner chose not to challenge their revised patent term adjustment within the two-month period. Petitioner's argument that they could not have filed a Request for Reconsideration of Patent Term Adjustment within two months of the date the above-referenced patent issued because the basis for the Request for Reconsideration of Patent Term Adjustment is the Wyeth decision, which was entered more than two months after the issuance of their patent, is not persuasive.

---

transmit a notice of that determination with the notice of allowance under 35 U.S.C. § 151; and (3) provide the applicant one opportunity to request reconsideration of any patent term adjustment determination. Pursuant to the mandate and authority in 35 U.S.C. § 154(b)(3), the USPTO promulgated 37 C.F.R. § 1.705, which provides that: (1) the notice of allowance will include notification of any patent term adjustment under 35 U.S.C. § 154(b)(37 C.F.R. § 1.705(a)); (2) any request for reconsideration of the patent term adjustment indicated in the notice of allowance (except as provided in 37 C.F.R. § 1.705(d)) must be by way of an application for patent term adjustment filed no later than the payment of the issue fee and accompanied by (inter alia) the fee set forth in 37 C.F.R. § 1.18(e)(37 C.F.R. § 1.705(b)); and (3) if the patent indicates or should have indicated a revised patent term adjustment, any request for reconsideration of the patent term adjustment indicated in the patent must be filed within two months of the date the patent issued.

Petitioner could have filed a Request for Reconsideration of Patent Term Adjustment as Wyeth did. It is acknowledged that petitioner may have chosen not to file a request for reconsideration based on a conclusion that the Office's interpretation of 35 U.S.C. § 154(b)(2)(A) was correct. Nonetheless, the fact that the District Court has now issued an Opinion contrary to the Office's interpretation does not make the situation extraordinary. This is not unlike any other situation where a patentee (or applicant) challenges a final agency decision and the decision upon judicial review could have had applicability to another patentee (or applicant) had they taken such action. In fact, many patentees may be in the same situation as petitioner with respect to the Wyeth decision. In addition, given that the law only allows 180 days for both the filing of a petition and for the Office's consideration of that petition, petitioner's unexplained delay in filing the petition weighs against them.

Petitioner simply fails to articulate how their failure to file a request for reconsideration of patent term adjustment within two months of the issue date of the patent was due to an extraordinary situation. Petitioner cannot rely on Wyeth's actions or the Wyeth decision to establish that their situation was extraordinary.

The contention that a decision is in error is a basis for a timely request for review of the decision but does not justify a delay in seeking review of such decision.

The Office provided notice that petitions under 37 CFR 1.182 and 1.183 or requests for certificate of corrections under 35 USC 354 and Sec. 1.323 or 35 U.S.C. 255 and Sec. 1.324 are not substitute *fora* to obtain reconsideration of a patent term adjustment determination indicated in a notice of allowance if applicant fails to submit a request for reconsideration within the time period specified in Sec. 1.705(b) or to obtain reconsideration of a patent term adjustment determination indicated in a patent if a patentee fails to submit a request for reconsideration within the time period specified in Sec. 1.705. See 69 Fed. Reg. 21704, 21707 (April, 22, 2004).

In view thereof, the petition under 37 CFR 1.183 for waiver of the two-month requirement of 37 CFR 1.705(d) is **dismissed**.

Accordingly, consideration now turns to the Request for Reconsideration of Patent Term Adjustment under 37 CFR 1.705(d).

ON REQUEST FOR RECONSIDERATION OF PATENT TERM ADJUSTMENT UNDER 37 CFR 1.705(d)

This is a decision on the "DETERMINATION OF PATENT TERM ADJUSTMENT – POST GRANT," filed November 7, 2008. Therein, patentee requests correction of the patent term adjustment (PTA) indicated in the patent to 990 days.

On September 2, 2008, the above-identified application matured into U.S. Patent No. 7,419,664 with a revised patent term adjustment of 526 days. The instant request for reconsideration was filed more than two months after the issuance of the patent, on November 7, 2008.

No error in the printing of the patent has been shown. The patent term adjustment indicated on the patent reflects the Office's determination of patent term adjustment shown in the PAIR system for this application. 37 CFR 1.705(d) provides the sole avenue before the Office for requesting reconsideration of the Office's determination of patent term adjustment indicated in the patent. Moreover, § 1.705(d) states that "any request for reconsideration of the patent term adjustment indicated in the patent must be filed within two months of the date the patent issued and must comply with the requirements of paragraphs (b)(1) and (b)(2) of this section." Since the request was not filed within two months of the issue date of the patent, the request is properly **dismissed as untimely filed**.

CONCLUSION

It is determined that waiver of the requirement pursuant to 37 CFR 1.183 is not warranted. Accordingly, the request for reconsideration of the patent term adjustment under 37 CFR 1.705(d) filed more than two months after the issue date of the patent is dismissed as untimely filed.

Receipt of the fees required for the petition under 37 CFR 1.183 and the application for patent term adjustment is acknowledged.

Telephone inquiries specific to this matter should be directed to the undersigned at (571) 272-3205.

Alesia M. Brown
Petitions Attorney
Office of Petitions

UNITED STATES PATENT AND TRADEMARK OFFICE

Commissioner for Patents
United States Patent and Trademark Office
P.O. Box 1450
Alexandria, VA 22313-1450
www.uspto.gov
DIW Jan-06

EPSTEIN DRANGEL BAZERMAN & JAMES, LLP
60 EAST 42ND STREET
SUITE 820
NEW YORK NY 10165

COPY MAILED

JAN 09 2006

OFFICE OF PETITIONS

In re Application of	:	
Eric Scheirer	:	
Application No. 10/855,776	:	DECISION ON PETITION
Filed: 27 May, 2004	:	
Attorney Docket No.LOJM-8739	:	

This is a decision on the petition filed on 4 August, 2005, under 37 CFR 1.137(b),[1] to revive the above-identified application.

The petition is **DISMISSED**.

Any request for reconsideration of this decision must be submitted within TWO (2) MONTHS from the mail date of this decision. Extensions of time under 37 CFR 1.136(a) are permitted. The reconsideration request should include a cover letter entitled "Renewed Petition Under 37 CFR 1.137(b)." This is not a final agency decision.

The application became abandoned on 27 September, 2004, for failure to timely file a response to the Notice to File Missing

---

[1] Effective December 1, 1997, the provisions of 37 CFR 1.137(b) now provide that where the delay in reply was unintentional, a petition may be filed to revive an abandoned application or a lapsed patent pursuant to 37 CFR 1.137(b). A grantable petition filed under the provisions of 37 CFR 1.137(b) must be accompanied by:

(1) the required reply, unless previously filed. In a nonprovisional application abandoned for failure to prosecute, the required reply may be met by the filing of a continuing application. In a nonprovisional utility or plant application filed on or after June 8, 1995, and abandoned for failure to prosecute, the required reply may also be met by the filing of a request for continuing examination in compliance with § 1.114. In an application or patent, abandoned or lapsed for failure to pay the issue fee or any portion thereof, the required reply must be the payment of the issue fee or any outstanding balance thereof. In an application, abandoned for failure to pay the publication fee, the required reply must include payment of the publication fee.

(2) the petition fee as set forth in 37 CFR 1.17(m);

(3) a statement that the entire delay in filing the required reply from the due date for the reply until the filing of a grantable petition pursuant to 37 CFR 1.137(b) was unintentional. The Commissioner may required additional information where there is a question whether the delay was unintentional; and

(4) any terminal disclaimer (and fee as set forth in 37 CFR 1.20(d)) required pursuant to 37 CFR 1.137(c)).

Parts of Nonprovisional Application mailed on 26 July, 2004, which set a two (2) month shortened period for reply. No extensions of time in accordance with 37 CFR 1.136(a) were obtained. Notice of Abandonment was mailed on 18 April, 2005.

The petition is dismissed because the required reply has not been submitted. While petitioner has submitted the statutory basic filing fee, declaration, and surcharge for their late filing, the Notice mailed on 26 July, 2004, additionally required a substitute specification in compliance with 37 CFR 1.52, 1.121(b)(3), and 1.125. No substitute specification is located among the papers received with the petition on 4 August, 2005.

Petitioner should submit the substitute specification with a renewed petition.

Further correspondence with respect to this matter should be addressed as follows:

By mail: Mail Stop Petition
Commissioner for Patents
P.O. Box 1450
Alexandria, VA 22313-1450

By FAX: (571) 273-8300
Attn: Office of Petitions

By hand: Customer Service Window
Mail Stop Petition
Randolph Building
401 Dulany Street
Alexandria, VA 22314

Receipt of the revocation and power of attorney is acknowledged. The correspondence address has been changed as requested.

Telephone inquiries concerning this matter may be directed to the undersigned at (571) 272-3231.

D Wood

Douglas I. Wood
Senior Petitions Attorney
Office of Petitions

cf: Notice Regarding Change of Power of Attorney

UNITED STATES PATENT AND TRADEMARK OFFICE

Commissioner for Patents
United States Patent and Trademark Office
P.O. Box 1450
Alexandria, VA 22313-1450
www.uspto.gov
DIW Jun-06

EPSTEIN DRANGEL BAZERMAN & JAMES, LLP
60 EAST 42ND STREET
SUITE 820
NEW YORK NY 10165

COPY MAILED
JUN 16 2006
OFFICE OF PETITIONS

In re Application of	:	
Eric Scheirer	:	
Application No. 10/855,776	:	DECISION ON PETITION
Filed: 27 May, 2004	:	
Attorney Docket No.LOJM-8739	:	

This is a decision on the renewed petition filed on 10 April, 2006, under 37 CFR 1.137(b),[1] to revive the above-identified application.

The petition is **GRANTED**.

The application became abandoned on 27 September, 2004, for failure to timely file a response to the Notice to File Missing Parts of Nonprovisional Application mailed on 26 July, 2004, which set a two (2) month shortened period for reply. No extensions of time in accordance with 37 CFR 1.136(a) were obtained. Notice of Abandonment was mailed on 18 April, 2005. The petition filed on 4 August, 2005, was dismissed on 9 January, 2006.

---

[1] Effective December 1, 1997, the provisions of 37 CFR 1.137(b) now provide that where the delay in reply was unintentional, a petition may be filed to revive an abandoned application or a lapsed patent pursuant to 37 CFR 1.137(b). A grantable petition filed under the provisions of 37 CFR 1.137(b) must be accompanied by:

(1) the required reply, unless previously filed. In a nonprovisional application abandoned for failure to prosecute, the required reply may be met by the filing of a continuing application. In a nonprovisional utility or plant application filed on or after June 8, 1995, and abandoned for failure to prosecute, the required reply may also be met by the filing of a request for continuing examination in compliance with § 1.114. In an application or patent, abandoned or lapsed for failure to pay the issue fee or any portion thereof, the required reply must be the payment of the issue fee or any outstanding balance thereof. In an application, abandoned for failure to pay the publication fee, the required reply must include payment of the publication fee.

(2) the petition fee as set forth in 37 CFR 1.17(m);

(3) a statement that the entire delay in filing the required reply from the due date for the reply until the filing of a grantable petition pursuant to 37 CFR 1.137(b) was unintentional. The Commissioner may required additional information where there is a question whether the delay was unintentional; and

(4) any terminal disclaimer (and fee as set forth in 37 CFR 1.20(d)) required pursuant to 37 CFR 1.137(c)).

Receipt of the substitute specification and one (1) month extension of time is acknowledged.

The application will be referred to the Office of Initial Patent Examination for further processing.

Telephone inquiries concerning this matter may be directed to the undersigned at (571) 272-3231.

D Wood

Douglas I. Wood
Senior Petitions Attorney
Office of Petitions

UNITED STATES PATENT AND TRADEMARK OFFICE

Commissioner for Patents
United States Patent and Trademark Office
P.O. Box 1450
Alexandria, VA 22313-1450
www.uspto.gov

MORGAN LEWIS & BOCKIUS LLP
1111 PENNSYLVANIA AVENUE NW
WASHINGTON, DC 20004

COPY MAILED

JUN 0 3 2008

OFFICE OF PETITIONS

In re Application of
Robert K. O'LEARY et al.
Application No. 10/855,797
Filed: May 28, 2004
Attorney Docket No. **105916.166/2 / 95176562-0**

DECISION ON PETITION

This is a decision on the petition under the unintentional provisions of 37 CFR 1.137(b), filed May 30, 2007, to revive the above-identified application.

The petition is **DISMISSED**.

Any request for reconsideration of this decision must be submitted within TWO (2) MONTHS from the mail date of this decision. Extensions of time under 37 CFR 1.136(a) are permitted. The reconsideration request should include a cover letter entitled "Renewed Petition under 37 CFR 1.137(b)." This is **not** a final agency action within the meaning of 5 U.S.C. § 704.

The application became abandoned for failure to reply in a timely manner to the Restriction Requirement, mailed September 13, 2006, which set a shortened statutory period for reply of one (1) month or thirty (30) days (whichever is later). No extensions of time under the provisions of 37 CFR 1.136(a) were obtained. Accordingly, the application became abandoned on October 14, 2006.

A grantable petition under 37 CFR 1.137(b) must be accompanied by: (1) the required reply, unless previously filed; (2) the petition fee as set forth in 37 CFR 1.17(m); (3) a statement that the entire delay in filing the required reply from the due date for the reply until the filing of a grantable petition pursuant to 37 CFR 1.137(b) was unintentional; and (4) any terminal disclaimer (and fee as set forth in 37 CFR 1.20(d)) required by 37 CFR 1.137(d). Where there is a question as to whether either the abandonment or the delay in filing a petition under 37 CFR 1.137 was unintentional, the Director may require additional information. See MPEP 711.03(c)(II)(C) and (D). The instant petition lacks item(s) (3) in that there is no statement about the delay being unintentional. A copy of the form PTO/SB/64 is attached for petitioner's use.

It is not apparent whether the person signing the statement of unintentional delay was in a position to have firsthand or direct knowledge of the facts and circumstances of the delay at issue. Nevertheless, such statement is being treated as having been made as the result of a reasonable inquiry into the facts and circumstances of such delay. See 37 CFR 10.18(b) and Changes to Patent Practice and Procedure; Final Rule Notice, 62 Fed. Reg. 53131, 53178 (October 10, 1997), 1203 Off. Gaz. Pat. Office 63, 103 (October 21, 1997). In the event that such an inquiry has not been made, petitioner must make such an inquiry. If such inquiry results in the discovery that it is not correct that the entire delay in filing the required reply from the due date for the reply until the filing of a grantable petition pursuant to 37 CFR 1.137(b) was unintentional, petitioner must notify the Office.

There is no indication that the person signing the petition was ever given a power of attorney to prosecute the application. If the person signing the petition desires to receive future correspondence regarding this application, the appropriate power of attorney document must be submitted. While a courtesy copy of this decision is being mailed to the person signing the petition, all future correspondence will be directed to the address currently of record until appropriate instructions are received.

Further correspondence with respect to this matter should be addressed as follows:

By Mail: Mail Stop PETITION
Commissioner for Patents
P. O. Box 1450
Alexandria, VA 22313-1450

By hand: U. S. Patent and Trademark Office
Customer Service Window, Mail Stop Petitions
Randolph Building
401 Dulany Street
Alexandria, VA 22314

The centralized facsimile number is **(571) 273-8300.**

Telephone inquiries concerning this decision should be directed to Tredelle Jackson at (571) 272-2783.

Ramesh Krishnamurthy

Ramesh Krishnamurthy
Petitions Examiner
Office of Petitions

Encl: PTO/SB/64

PTO/SB/64 (01-08)
Approved for use through 05/31/2008. OMB 0651-0031
U.S. Patent and Trademark Office; U.S. DEPARTMENT OF COMMERCE
Under the Paperwork Reduction Act of 1995, no persons are required to respond to a collection of information unless it displays a valid OMB control number.

PETITION FOR REVIVAL OF AN APPLICATION FOR PATENT ABANDONED UNINTENTIONALLY UNDER 37 CFR 1.137(b)

Docket Number (Optional)

First named inventor:

Application No.: Art Unit:

Filed: Examiner:

Title:

Attention: Office of Petitions
Mail Stop Petition
Commissioner for Patents
P.O. Box 1450
Alexandria, VA 22313-1450
FAX (571) 273-8300

NOTE: If information or assistance is needed in completing this form, please contact Petitions Information at (571) 272-3282.

The above-identified application became abandoned for failure to file a timely and proper reply to a notice or action by the United States Patent and Trademark Office. The date of abandonment is the day after the expiration date of the period set for reply in the office notice or action plus an extensions of time actually obtained.

APPLICANT HEREBY PETITIONS FOR REVIVAL OF THIS APPLICATION

NOTE: A grantable petition requires the following items:
(1) Petition fee;
(2) Reply and/or issue fee;
(3) Terminal disclaimer with disclaimer fee - required for all utility and plant applications filed before June 8, 1995; and for all design applications; and
(4) Statement that the entire delay was unintentional.

1. Petition fee

☐ Small entity-fee $ _____ (37 CFR 1.17(m)). Applicant claims small entity status. See 37 CFR 1.27.

☐ Other than small entity – fee $ _____ (37 CFR 1.17(m))

2. Reply and/or fee

A. The reply and/or fee to the above-noted Office action in the form of _____(identify type of reply):

☐ has been filed previously on _____.
☐ is enclosed herewith.

B. The issue fee and publication fee (if applicable) of $ _____.

☐ has been paid previously on _____.
☐ is enclosed herewith.

This collection of information is required by 37 CFR 1.137(b). The information is required to obtain or retain a benefit by the public which is to file (and by the USPTO to process) an application. Confidentiality is governed by 35 U.S.C. 122 and 37 CFR 1.11 and 1.14. This collection is estimated to take 1.0 hour to complete, including gathering, preparing, and submitting the completed application form to the USPTO. Time will vary depending upon the individual case. Any comments on the amount of time you require to complete this form and/or suggestions for reducing this burden, should be sent to the Chief Information Officer, U.S. Patent and Trademark Office, U.S. Department of Commerce, P.O. Box 1450, Alexandria, VA 22313-1450. DO NOT SEND FEES OR COMPLETED FORMS TO THIS ADDRESS. **SEND TO: Mail Stop Petition, Commissioner for Patents, P.O. Box 1450, Alexandria, VA 22313-1450.**

If you need assistance in completing the form, call 1-800-PTO-9199 and select option 2.

Under the Paperwork Reduction Act of 1995, no persons are required to respond to a collection of information unless it displays a valid OMB control number.

3. Terminal disclaimer with disclaimer fee

☐ Since this utility/plant application was filed on or after June 8, 1995, no terminal disclaimer is required.

☐ A terminal disclaimer (and disclaimer fee (37 CFR 1.20(d)) of $ _____ for a small entity or $ _____ for other than a small entity) disclaiming the required period of time is enclosed herewith (see PTO/SB/63).

4. STATEMENT: The entire delay in filing the required reply from the due date for the required reply until the filing of a grantable petition under 37 CFR 1.137(b) was unintentional. [NOTE: The United States Patent and Trademark Office may require additional information if there is a question as to whether either the abandonment or the delay in filing a petition under 37 CFR 1.137(b) was unintentional (MPEP 711.03(c), subsections (III)(C) and (D)).]

WARNING:

Petitioner/applicant is cautioned to avoid submitting personal information in documents filed in a patent application that may contribute to identity theft. Personal information such as social security numbers, bank account numbers, or credit card numbers (other than a check or credit card authorization form PTO-2038 submitted for payment purposes) is never required by the USPTO to support a petition or an application. If this type of personal information is included in documents submitted to the USPTO, petitioners/applicants should consider redacting such personal information from the documents before submitting them to the USPTO. Petitioner/applicant is advised that the record of a patent application is available to the public after publication of the application (unless a non-publication request in compliance with 37 CFR 1.213(a) is made in the application) or issuance of a patent. Furthermore, the record from an abandoned application may also be available to the public if the application is referenced in a published application or an issued patent (see 37 CFR 1.14). Checks and credit card authorization forms PTO-2038 submitted for payment purposes are not retained in the application file and therefore are not publicly available.

Signature	Date
Typed or printed name	Registration Number, if applicable
Address	Telephone Number
Address	

Enclosures:
- ☐ Fee Payment
- ☐ Reply
- ☐ Terminal Disclaimer Form
- ☐ Additional sheets containing statements establishing unintentional delay
- ☐ Other: _____

CERTIFICATE OF MAILING OR TRANSMISSION [37 CFR 1.8(a)]

I hereby certify that this correspondence is being:

☐ Deposited with the United States Postal Service on the date shown below with sufficient postage as first class mail in an envelope addressed to: Mail Stop Petition, Commissioner for Patents, P. O. Box 1450, Alexandria, VA 22313-1450.

☐ Transmitted by facsimile on the date shown below to the United States Patent and Trademark Office at (571) 273-8300.

Date	Signature
	Typed or printed name of person signing certificate

Privacy Act Statement

The **Privacy Act of 1974 (P.L. 93-579)** requires that you be given certain information in connection with your submission of the attached form related to a patent application or patent. Accordingly, pursuant to the requirements of the Act, please be advised that: (1) the general authority for the collection of this information is 35 U.S.C. 2(b)(2); (2) furnishing of the information solicited is voluntary; and (3) the principal purpose for which the information is used by the U.S. Patent and Trademark Office is to process and/or examine your submission related to a patent application or patent. If you do not furnish the requested information, the U.S. Patent and Trademark Office may not be able to process and/or examine your submission, which may result in termination of proceedings or abandonment of the application or expiration of the patent.

The information provided by you in this form will be subject to the following routine uses:

1. The information on this form will be treated confidentially to the extent allowed under the Freedom of Information Act (5 U.S.C. 552) and the Privacy Act (5 U.S.C 552a). Records from this system of records may be disclosed to the Department of Justice to determine whether disclosure of these records is required by the Freedom of Information Act.
2. A record from this system of records may be disclosed, as a routine use, in the course of presenting evidence to a court, magistrate, or administrative tribunal, including disclosures to opposing counsel in the course of settlement negotiations.
3. A record in this system of records may be disclosed, as a routine use, to a Member of Congress submitting a request involving an individual, to whom the record pertains, when the individual has requested assistance from the Member with respect to the subject matter of the record.
4. A record in this system of records may be disclosed, as a routine use, to a contractor of the Agency having need for the information in order to perform a contract. Recipients of information shall be required to comply with the requirements of the Privacy Act of 1974, as amended, pursuant to 5 U.S.C. 552a(m).
5. A record related to an International Application filed under the Patent Cooperation Treaty in this system of records may be disclosed, as a routine use, to the International Bureau of the World Intellectual Property Organization, pursuant to the Patent Cooperation Treaty.
6. A record in this system of records may be disclosed, as a routine use, to another federal agency for purposes of National Security review (35 U.S.C. 181) and for review pursuant to the Atomic Energy Act (42 U.S.C. 218(c)).
7. A record from this system of records may be disclosed, as a routine use, to the Administrator, General Services, or his/her designee, during an inspection of records conducted by GSA as part of that agency's responsibility to recommend improvements in records management practices and programs, under authority of 44 U.S.C. 2904 and 2906. Such disclosure shall be made in accordance with the GSA regulations governing inspection of records for this purpose, and any other relevant (*i.e.*, GSA or Commerce) directive. Such disclosure shall not be used to make determinations about individuals.
8. A record from this system of records may be disclosed, as a routine use, to the public after either publication of the application pursuant to 35 U.S.C. 122(b) or issuance of a patent pursuant to 35 U.S.C. 151. Further, a record may be disclosed, subject to the limitations of 37 CFR 1.14, as a routine use, to the public if the record was filed in an application which became abandoned or in which the proceedings were terminated and which application is referenced by either a published application, an application open to public inspection or an issued patent.
9. A record from this system of records may be disclosed, as a routine use, to a Federal, State, or local law enforcement agency, if the USPTO becomes aware of a violation or potential violation of law or regulation.

UNITED STATES PATENT AND TRADEMARK OFFICE

Commissioner for Patents
United States Patent and Trademark Office
P.O. Box 1450
Alexandria, VA 22313-1450
www.uspto.gov

MORGAN LEWIS & BOCKIUS LLP
1111 PENNSYLVANIA AVENUE NW
WASHINGTON DC 20004

COPY MAILED

JUL 31 2008

In re Application of
Application No. 10/855,797
Filed: May 28, 2004
Attorney Docket No. **067949-5010-01**

DECISION ON PETITION

This is a decision on the renewed petition under the unintentional provisions of 37 CFR 1.137(b), filed June 05, 2008, to revive the above-identified application.

The petition is **GRANTED**.

The application became abandoned for failure to reply in a timely manner to the Restriction Requirement, mailed September 13, 2006, which set a shortened statutory period for reply of one (1) month or thirty (30) days (whichever is later). No extensions of time under the provisions of 37 CFR 1.136(a) were obtained. Accordingly, the application became abandoned on October 14, 2006.

The petition satisfies the requirements of 37 CFR 1.137(b) in that petitioner has supplied (1) the reply in the form of an election, (2) the petition fee of $1500, and (3) a proper statement of unintentional delay. Accordingly, the reply to the restriction requirement of September 13, 2006 is accepted as having been unintentionally delayed.

Telephone inquiries concerning this decision should be directed to Tredelle Jackson at (571) 272-2783.

This application is being referred to Technology Center AU 1655 for appropriate action on the concurrently filed election.

Ramesh Krishnamurthy

Ramesh Krishnamurthy
Petitions Examiner
Office of Petitions

PATENT
Attorney Docket No. 067949-5010-01

IN THE UNITED STATES PATENT AND TRADEMARK OFFICE

In re Application of:	)
	)
Robert K. O'Leary, *et al.*	) Confirmation No.: 8330
	)
Application No.: 10/855,797	) Group Art Unit: 1655
	)
Filed: May 28, 2004	) Examiner: Christopher R. Tate
	)
For: PULSATILE ACIDIFICATION WAVE DEMINERALIZATION PROCESS FOR PRODUCING OSTEOINDUCTIVE BONE; AND BONE PRODUCED THEREBY	)

Mail Stop Petition
Commissioner for Patents
Alexandria, VA 22314

RENEWED PETITION UNDER 37 C.F.R. 1.137(b)

and

Statement Establishing Unintentional Delay

Applicants submit a renewed petition under 37 C.F.R. 1.137(b) to request reconsideration of the Decision on Petition, dated June 3, 2008, dismissing Applicants' petition filed on May 30, 2007.

The Decision on Petition stated that the petition filed on May 30, 2007, lacked item (3), the statement that the entire delay in filing the required reply from the due date for reply until the filing of a grantable petition pursuant to 37 C.F.R. 1.137(b) was unintentional. In the attached Petition for Revival of an Application for Patent Abandoned Unintentionally under 37 C.F.R. 1.137(b), Applicants submit the required statement that the entire delay in filing the required reply from the due date for the required reply until the filing of a grantable petition under 37 C.F.R. 1.137(b) was unintentional.

The Decision on Petition also stated that the Director may require additional information if there is a question as to whether either the abandonment or the delay in filing a petition under 37 C.F.R. 1.137(b) was unintentional. Applicants submit that the reason for the delay in filing

the required reply was that in the process of transferring the application from Baker & Mackenzie to Morgan, Lewis & Bockius in February of 2007, Applicants unintentionally failed to respond to the Restriction Requirement mailed on September 13, 2006. Applicants did not realize that the application was abandoned until Applicants received the Notice of Abandonment, dated May 15, 2007. In response to the Notice of Abandonment, Applicants submitted to the U.S. Patent & Trademark Office on May 30, 2007, a Petition for Revival of an Application for Patent Abandoned Unintentionally under 37 C.F.R. 1.137(b) accompanied by the required fee. Applicants also filed the attached response to the Restriction Requirement on November 30, 2007.

Conclusion

In view of the foregoing, Applicants respectfully request the withdrawal of the holding of abandonment and the re-opening of the prosecution of this application. Applicants are filing this renewed petition within two months of the Decision dated June 3, 2008. Accordingly, this renewed petition is timely filed.

Applicants respectfully submit that no fees are due with the filing of this renewed petition. However, if there are any additional fees due in connection with the filing of this response, please charge the fees to our Deposit Account No. 50-0310. If a fee is required for an extension of time under 37 C.F.R. §1.136 not accounted for above, such an extension is requested and the fee should also be charged to our Deposit Account.

Respectfully submitted,
Morgan, Lewis & Bockius LLP

Sally P. Teng
Registration No. 45,397

Date: June 5, 2008
Morgan, Lewis & Bockius LLP
Customer No. **09629**
1111 Pennsylvania Avenue, N.W.
Washington, D.C. 20004
Tel: 202-739-3000
Fax: 202-739-5734

PTO/SB/64 (01-08)
Approved for use through 06/30/2008. OMB 0651-0031
U.S. Patent and Trademark Office; U.S. DEPARTMENT OF COMMERCE
Under the Paperwork Reduction Act of 1995, no persons are required to respond to a collection of information unless it displays a valid OMB control number.

PETITION FOR REVIVAL OF AN APPLICATION FOR PATENT ABANDONED UNINTENTIONALLY UNDER 37 CFR 1.137(b)

Docket Number (Optional)
67949-5010-01

First named inventor: Robert K. O'Leary

Application No.: 10/855,797 Art Unit: 1655

Filed: May 28, 2004 Examiner: Christopher R. Tate

Title: Pulsatile Acidification Wave Demineralization Process for Producing Osteoinductive Bone; and Bone Produced Thereby

Attention: Office of Petitions
Mail Stop Petition
Commissioner for Patents
P.O. Box 1450
Alexandria, VA 22313-1450
FAX (571) 273-8300

NOTE: If information or assistance is needed in completing this form, please contact Petitions Information at (571) 272-3282.

The above-identified application became abandoned for failure to file a timely and proper reply to a notice or action by the United States Patent and Trademark Office. The date of abandonment is the day after the expiration date of the period set for reply in the office notice or action plus an extensions of time actually obtained.

APPLICANT HEREBY PETITIONS FOR REVIVAL OF THIS APPLICATION

NOTE: A grantable petition requires the following items:
(1) Petition fee;
(2) Reply and/or issue fee;
(3) Terminal disclaimer with disclaimer fee - required for all utility and plant applications filed before June 8, 1995; and for all design applications; and
(4) Statement that the entire delay was unintentional.

1. Petition fee

☐ Small entity-fee $ _____ (37 CFR 1.17(m)). Applicant claims small entity status. See 37 CFR 1.27.

☐ Other than small entity – fee $ _____ (37 CFR 1.17(m))

2. Reply and/or fee

A. The reply and/or fee to the above-noted Office action in the form of _____(identify type of reply):

☑ has been filed previously on November 30, 2007.
☐ is enclosed herewith.

B. The issue fee and publication fee (if applicable) of $ _____.
☐ has been paid previously on _____.
☐ is enclosed herewith.

This collection of information is required by 37 CFR 1.137(b). The information is required to obtain or retain a benefit by the public which is to file (and by the USPTO to process) an application. Confidentiality is governed by 35 U.S.C. 122 and 37 CFR 1.11 and 1.14. This collection is estimated to take 1.0 hour to complete, including gathering, preparing, and submitting the completed application form to the USPTO. Time will vary depending upon the individual case. Any comments on the amount of time you require to complete this form and/or suggestions for reducing this burden, should be sent to the Chief Information Officer, U.S. Patent and Trademark Office, U.S. Department of Commerce, P.O. Box 1450, Alexandria, VA 22313-1450. DO NOT SEND FEES OR COMPLETED FORMS TO THIS ADDRESS. **SEND TO: Mail Stop Petition, Commissioner for Patents, P.O. Box 1450, Alexandria, VA 22313-1450.**

If you need assistance in completing the form, call 1-800-PTO-9199 and select option 2.

Under the Paperwork Reduction Act of 1995, no persons are required to respond to a collection of information unless it displays a valid OMB control number.

3. Terminal disclaimer with disclaimer fee

☐ Since this utility/plant application was filed on or after June 8, 1995, no terminal disclaimer is required.

☐ A terminal disclaimer (and disclaimer fee (37 CFR 1.20(d)) of $ _____ for a small entity or $ _____ for other than a small entity) disclaiming the required period of time is enclosed herewith (see PTO/SB/63).

4. STATEMENT: The entire delay in filing the required reply from the due date for the required reply until the filing of a grantable petition under 37 CFR 1.137(b) was unintentional. [NOTE: The United States Patent and Trademark Office may require additional information if there is a question as to whether either the abandonment or the delay in filing a petition under 37 CFR 1.137(b) was unintentional (MPEP 711.03(c), subsections (III)(C) and (D)).]

WARNING:

Petitioner/applicant is cautioned to avoid submitting personal information in documents filed in a patent application that may contribute to identity theft. Personal information such as social security numbers, bank account numbers, or credit card numbers (other than a check or credit card authorization form PTO-2038 submitted for payment purposes) is never required by the USPTO to support a petition or an application. If this type of personal information is included in documents submitted to the USPTO, petitioners/applicants should consider redacting such personal information from the documents before submitting them to the USPTO. Petitioner/applicant is advised that the record of a patent application is available to the public after publication of the application (unless a non-publication request in compliance with 37 CFR 1.213(a) is made in the application) or issuance of a patent. Furthermore, the record from an abandoned application may also be available to the public if the application is referenced in a published application or an issued patent (see 37 CFR 1.14). Checks and credit card authorization forms PTO-2038 submitted for payment purposes are not retained in the application file and therefore are not publicly available.

Signature	June 5, 2008 Date
Sally P. Teng Typed or printed name	45,397 Registration Number, if applicable
Morgan, Lewis & Bocklus Address	202.739.5734 Telephone Number
1111 Pennsylvania Avenue, N.W., Washington, D.C. 20004 Address	

Enclosures:
- ☐ Fee Payment
- ☐ Reply
- ☐ Terminal Disclaimer Form
- ☑ Additional sheets containing statements establishing unintentional delay
- ☑ Other: Renewed Petition Under 37 C.F.R. 1.137(b)

CERTIFICATE OF MAILING OR TRANSMISSION [37 CFR 1.8(a)]

I hereby certify that this correspondence is being:

☐ Deposited with the United States Postal Service on the date shown below with sufficient postage as first class mail in an envelope addressed to: Mail Stop Petition, Commissioner for Patents, P. O. Box 1450, Alexandria, VA 22313-1450.

☐ Transmitted by facsimile on the date shown below to the United States Patent and Trademark Office at (571) 273-8300.

Date	Signature
	Typed or printed name of person signing certificate

UNITED STATES PATENT AND TRADEMARK OFFICE

Commissioner for Patents
United States Patent and Trademark Office
P.O. Box 1450
Alexandria, VA 22313-1450
www.uspto.gov

FOLEY AND LARDNER LLP
SUITE 500
3000 K STREET NW
WASHINGTON DC 20007

COPY MAILED
MAR 30 2007
OFFICE OF PETITIONS

RECEIVED
MAR 30 2007
OFFICE OF PETITIONS
CANCELLED

In re Application of	:	
White et al.	:	DECISION ON PETITION
Application No. 10/855,809	:	TO WITHDRAW
Filed: May 28, 2004	:	FROM RECORD
Attorney Docket No. 046121-0107	:	

This is a decision on the Request to Withdraw as attorney or agent of record under 37 C.F.R.§ 1.36(b), filed January 23, 2007.

The request is **APPROVED**.

A grantable request to withdraw as attorney/agent of record must be signed by every attorney/agent seeking to withdraw or contain a clear indication that one attorney is signing on behalf of another/others. A request to withdraw will not be approved unless at least 30 (thirty) days would remain between the date of approval and the later of the expiration date of a time to file a response or the expiration date of the maximum time period which can be extended under 37 C.F.R. § 1.136(a).

The request was signed by Beth A. Burrous on behalf of all attorneys of record who are associated with Customer Number 22428. All attorneys/agents associated with said customer number have been withdrawn. Applicants are reminded that there is no attorney of record at this time.

The request to change the correspondence of record is not acceptable as the requested correspondence address is not that of: (1) the first named inventor; or (2) the assignee of the entire interest who has previously taken action in the instant application. All future communications from the Office will continue to be directed to the first named inventor at the first below-listed address until otherwise properly notified by the applicants.

There is an outstanding Office action mailed December 11, 2006 that requires a reply from the applicants.

Telephone inquires concerning this decision should be directed to the undersigned at (571) 272-3206. All other inquires concerning either the examination or status of the application should be directed to the Technology Center.

Liana Walsh
Petitions Examiner
Office of Petitions

Cc:

DAVID P. WHITE
4119-D BREEZEWOOD DRIVE
WILMINGTON, NC 28412

STEVEN A. FONTANA, ESQUIRE
GENERAL PATENT COUNSEL
AAIPHARMA
2320 SCIENTIFIC PARK DRIVE
WILMINGTON, NC 28405

UNITED STATES PATENT AND TRADEMARK OFFICE

UNITED STATES DEPARTMENT OF COMMERCE
United States Patent and Trademark Office
Address: COMMISSIONER FOR PATENTS
P.O. Box 1450
Alexandria, Virginia 22313-1450
www.uspto.gov

COATS & BENNETT, PLLC
1400 Crescent Green, Suite 300
Cary, NC 27518

Mail Date: 04/21/2010

Applicant	: Robin C. Baneth	: DECISION ON REQUEST FOR
Patent Number	: 7624355	: RECALCULATION of PATENT
Issue Date	: 11/24/2009	: TERM ADJUSTMENT IN VIEW
Appliction No	: 10/855,812	: OF WYETH AND NOTICE OF INTENT TO
Filed	: 05/27/2004	: ISSUE CERTIFICATE OF CORRECTION
		:

The Request for Recalculation is **GRANTED** to the extent indicated.

The patent term adjustment has been determined to be **1286** days. The USPTO will *sua sponte* issue a certificate of correction reflecting the amount of PTA days determined by the recalculation.

Prior to the issuance of the certificate of correction, the USPTO will afford patentee an opportunity to be heard and request reconsideration. Accordingly, patentee has **one month or thirty (30) days**, whichever is longer, to file a request for reconsideration of this patent term adjustment calculation. See 35 U.S.C. 154(b)(3)(B)(ii) and 37 CFR 1.322(a)(4). No extensions of time will be granted under 37 CFR 1.136.

Patentee should use document code PET.OP if electronically filing a request for reconsideration of this patent term adjustment calculation. The patentee must also include the information required by 37 CFR 1.705(b)(2) and the fee required by 37 CFR 1.18(e). If patentee does not file a timely request for reconsideration of this patent term adjustment calculation including the information required by 37 CFR 1.705(b)(2) and the fee required by 37 CFR 1.18(e), the USPTO will issue a certificate of correction reflecting the PTA determination noted above.

Patentee should be aware that in order to preserve the right to review in the United States District Court for the District of Columbia of the USPTO patent term adjustment determination, patentee must ensure that he or she also take the steps required under 35 U.S.C. 154(b)(4)(A) in a timely manner. Nothing in the request for recalculation should be construed as providing an alternative time frame for commencing a civil action under 35 U.S.C. 154(b)(4)(A).

Any questions concerning this decision should be directed to the Office of Patent Legal Administration at 571-272-7702.

UNITED STATES PATENT AND TRADEMARK OFFICE

Commissioner for Patents
United States Patent and Trademark Office
P.O. Box 1450
Alexandria, VA 22313-1450
www.uspto.gov

AMGEN INC.
MAIL STOP 28-2-C
ONE AMGEN CENTER DRIVE
THOUSAND OAKS CA 91320-1799

COPY MAILED

SEP 2 8 2009

OFFICE OF PETITIONS

In re Application of	:	
Shaw-Fen Sylvia Hu	:	
Application No. 10/855820	:	ON REQUEST FOR
Filing or 371(c) Date: 05/26/2004	:	RECONSIDERATION OF
Attorney Docket No.	:	PATENT TERM ADJUSTMENT
A-357F	:	

This is in response to the REQUEST FOR RECONSIDERATION OF PATENT TERM ADJUSTMENT PURSUANT TO 37 CFR 1.702, filed July 16, 2009. Applicant submits that the correct patent term adjustment to be indicated on the patent is 851 days, not 393 days as calculated by the Office as of the mailing of the initial determination of patent term adjustment. Applicant requests this correction solely on the basis that the Office will take in excess of three years to issue this patent. The request is properly treated under 37 CFR 1.705(b).

As the instant application for patent term adjustment requests reconsideration of the patent term adjustment as it relates to the Office's failure to issue the patent within 3 years of the filing date, the application for patent term adjustment under 37 CFR 1.705(b) is **DISMISSED as PREMATURE**.

Knowledge of the actual date the patent issues is required to calculate the amount, if any, of additional patent term patentee is entitled to for Office failure to issue the patent within 3 years. See § 1.702(b). (This is true even where a request for continued examination (RCE) was filed). The computer will not undertake the § 1.702(b) calculation until the actual date of issuance of the patent has been determined. Likewise, the computer will not calculate any further Office delay under § 1.702(a)(4) or applicant delay under § 1.704(c)(10) until the actual date of issuance of the patent has been determined. As such, the Office can not make a determination on the correctness of the patent term adjustment until the patent has issued.

Requesting reconsideration of the patent term adjustment to be indicated on the patent under 37 CFR 1.705(b) based on the initial determination of patent term adjustment and a projected issuance date of the patent (or even the filing date of the request for continued examination) is premature. Accordingly, it is appropriate to dismiss as premature such a request.

Rather than file an application for patent term adjustment under 37 CFR 1.705(b) contesting the 37 CFR 1.702(b) calculation at the time of the mailing of the notice of allowance, applicant is

advised that they may wait until the time of the issuance of the patent and file a request for reconsideration of the patent term adjustment pursuant to 37 CFR 1.705(d). As the USPTO does not calculate the amount of time earned pursuant to 37 CFR 1.702(b) until the time of the issuance of the patent, the Office will consider any request for reconsideration of the patent term adjustment due to an error in the calculation of 37 CFR 1.702(b) to be timely if the request for reconsideration is filed within two months of the issuance of the patent. However, as to all other bases for contesting the initial determination of patent term adjustment received with the notice of allowance, applicant must timely file an application for patent term adjustment prior to the payment of the issue fee[1].

The Office acknowledges submission of the $200.00 fee set forth in 37 CFR 1.18(e) for consideration of the application for patent term adjustment under 37 CFR 1.705(b).

Any request for reconsideration of the patent term adjustment indicated on the patent must be timely filed within 2 months after issuance pursuant to 37 CFR 1.705(d) and must include payment of the required fee under 37 CFR 1.18(e).

The Office of Data Management has been advised of this decision. This application is being referred to the Office of Data Management for issuance of the patent.

Telephone inquiries specific to this decision should be directed to Attorney Derek Woods at (571) 272-3232.

Alesia Brown
Senior Petitions Attorney
Office of Petitions
Office of the Deputy Commissioner
for Patent Examination Policy

[1] For example, if applicant disputes both the calculation of patent term adjustment under 37 CFR 1.702(a)(1) for Office failure to mail a first Office action or notice of allowance not later than fourteen months after the date on which the application was filed and under 37 CFR 1.702(b) for Office failure to issue a patent within three years of the actual filing date of the application, then applicant must still timely file an application for patent term adjustment prior to the payment of the issue fee to contest the calculation of Office delay in issuing a first Office action or notice of allowance. See 37 CFR 1.705(b) and 35 U.S.C. 154(b)(3)(B). A dispute as to the calculation of the §1.702(a)(1) period raised on request for reconsideration of patent term adjustment under 37 CFR 1.705(d) will be dismissed as untimely filed.

UNITED STATES PATENT AND TRADEMARK OFFICE

Commissioner for Patents
United States Patent and Trademark Office
P.O. Box 1450
Alexandria, VA 22313-1450
www.uspto.gov

MICHAEL N. HAYNES
1341 HUNTERSFIELD CLOSE
KESWICK VA 22947

MAILED

JAN 1 1 2010

OFFICE OF PETITIONS

In re Patent No. 7,250,734	:	
Issue Date: July 31, 2007	:	
Application No. 10/855,821	:	NOTICE
Filed: May 27, 2004	:	
Attorney Docket No. 1024-004	:	

This is a notice regarding your request for acceptance of a fee deficiency submission under 37 CFR 1.28. On September 1, 1998, the Court of Appeals for the Federal Circuit held that 37 CFR 1.28(c) is the sole provision governing the time for correction of the erroneous payment of the issue fee as a small entity. **See DH Technology v. Synergystex International, Inc. 154 F.3d 1333, 47 USPQ2d 1865 (Fed. Cir. Sept. 1, 1998).**

The Office no longer investigates or rejects original or reissue applications under 37 CFR 1.56. **1098 Off. Gaz. Pat. Office 502 (January 3, 1989)**. Therefore, nothing in this Notice is intended to imply that an investigation was done.

Your fee deficiency submission under 37 CFR 1.28 is hereby **ACCEPTED**.

This application is no longer entitled to small entity status. Accordingly, all future fees paid in this application must be paid at the large entity rate.

Inquiries related to this communication should be directed to Diane C. Goodwyn at (571) 272-6735.

for Thurman K. Page
Petitions Examiner
Office of Petitions

UNITED STATES PATENT AND TRADEMARK OFFICE

Commissioner for Patents
United States Patent and Trademark Office
P.O. Box 1450
Alexandria, VA 22313-1450
www.uspto.gov

NIKOLAI & MERSEREAU PA
900 SECOND AVE SOUTH
SUITE 820
MINNEAPOLIS MN 55402-3325

COPY MAILED

APR 0 4 2005

OFFICE OF PETITIONS

In re Application of	:	
Arne Lahti	:	
Application No. 10/855,825	:	DECISION ON PETITION
Filed: May 27, 2004	:	
Attorney Docket No. 20040079.ORI	:	

This is a decision on the "PETITION TO AWARD PATENT APPLICATION FILING DATE", filed October 25, 2004 (re-filed on December 20, 2004), which is being treated as a petition under 37 C.F.R. § 1.53 to accord the above-identified application a filing date of May 27, 2004, with 3 sheets of drawings as part of the original disclosure.

The petition is **GRANTED**.

Application papers in the above-identified application were filed on May 27, 2004. However, on October 18, 2004, the Initial Patent Examination Division mailed applicant a "Notice of Incomplete NonProvisional Application." Applicant was notified that the application papers had not been accorded a filing date because the application was deposited without drawings.

In response, applicant filed the instant petition. Accompanying the petition was a copy of 3 drawing sheets. Applicant maintains that the application as originally filed included 3 pages of drawings. In support thereof, applicant submitted a postcard receipt identifying this application, itemizing "one copy of three (3) sheets of formal patent drawings" as enclosed, bearing a United States Patent and Trademark Office date-stamp of May 27, 2004, and lacking any notation of non-receipt of any item listed.

A postcard receipt which itemizes and properly identifies the items which are being filed serves as *prima facie* evidence of receipt in the Office of all items listed thereon on the date stamped thereon by the Office. See MPEP 503.

Given the basis for granting the petition, the $130 petition fee has been refunded to Deposit Account No. 08-1265.

The application is being forwarded to the Office of Initial Patent Examination (OIPE) for further processing with a filing date of May 27, 2004, using the application papers received in the Office on that date and the 3 pages of drawings as resupplied on petition filed October 25, 2004, and for indication in Office records that 3 sheets of drawings was present on filing.

Telephone inquiries related to this decision should be directed to the undersigned at 571-272-3207.

Cliff Congo
Petitions Attorney
Office of Petitions

UNITED STATES PATENT AND TRADEMARK OFFICE

COMMISSIONER FOR PATENTS
UNITED STATES PATENT AND TRADEMARK OFFICE
P.O. BOX 1450
ALEXANDRIA, VA 22313-1450
WWW.USPTO.GOV

Paper No. None

TOWNSEND AND TOWNSEND AND CREW, LLP
TWO EMBARCADERO CENTER
EIGHTH FLOOR
SAN FRANCISCO CA 94111-3834

COPY MAILED

MAR 3 1 2005

OFFICE OF PETITIONS

In re Application of
John Turner, John Cavacuiti, David G. Pike,
and Richard James Elgie
Application No. 10/855,860
Filed: May 26, 2004
Attorney Docket No. 14572P-069710US
Title: SYSTEMS AND METHODS FOR A
WIRELESS NETWORK CONNECTION
POINT LOCATOR

DECISION ON PETITION
UNDER 37 C.F.R. §1.47(a)

This is in response to the renewed petition under 37 C.F.R. §1.47(a)[1] filed December 28, 2004.

On May 26, 2004, the application was deposited, identifying John Turner, John Cavacuiti, David G. Pike, and Richard James Elgie as joint inventors. On July 29, 2004, applicant was mailed a "Notice to File Missing Parts of Nonprovisional Application - Filing Date Granted" (Notice), requiring an executed oath or declaration in compliance with 37 C.F.R. §1.63, as well as the surcharge associated with the late submission of an oath or declaration, the basic filing fee, and fees for additional claims. This Notice set a two-month period for reply.

1A grantable petition under 37 C.F.R. §1.47(a) requires:

(1) the petition fee of $130;
(2) a surcharge of either $65 or $130 if the petition is not filed at the time of filing the application;
(3) a statement of the last known address of the non-signing inventors;
(4) proof that a copy of the entire application (specification, claims, drawings, and the oath or declaration) was sent or given to the non-signing inventor for review;
(5) proof that the non-signing inventor refuses to sign the oath or declaration after having been presented with the application papers if the inventor refuses to sign, or proof that diligent efforts have been made to locate the non-signing inventor if he or she cannot be found, and;
(6) a declaration which complies with 37 CFR §1.63.

With the instant petition, Petitioner has submitted a declaration executed by each of the non-singing inventors save Mr. Pike, the petition fee, the surcharge associated with the late submission of an oath or declaration, the basic filing fee, fees for additional claims, a statement of facts, the last known address for the non-signing inventor, a copy of a letter, and a three-month extension of time to make timely this submission.

Petitioner has met requirements (1) – (6) above.

The petition is **GRANTED** and this application is hereby accorded Rule §1.47(a) status.

As provided in Rule 1.47(a), this Office will forward notice of this application's filing to the non-signing inventor at the addresses given in the petition. Notice of the filing of this application will also be published in the Official Gazette.

After this decision is mailed, the application will be forwarded to Technology Center 2600 for further processing.

The general phone number for the Office of Petitions which should be used for status requests is (571) 272-3282. Telephone inquiries regarding *this decision* should be directed to the undersigned at (571) 272-3225.

Paul Shanoski
Senior Attorney
Office of Petitions
United States Patent and Trademark Office

UNITED STATES PATENT AND TRADEMARK OFFICE

COMMISSIONER FOR PATENTS
UNITED STATES PATENT AND TRADEMARK OFFICE
P.O. BOX 1450
ALEXANDRIA, VA 22313-1450
WWW.USPTO.GOV

David G. Pike
5774 Broadway Road
Nanaimo, B.C. V9V 1E9
CANADA

COPY MAILED

MAR 3 1 2005

OFFICE OF PETITIONS

In re Application of
John Turner, John Cavacuiti, David G. Pike, and Richard James Elgie
Application No. 10/855,860
Filed: May 26, 2004
Attorney Docket No. 14572P-069710US
Title: SYSTEMS AND METHODS FOR A WIRELESS NETWORK CONNECTION POINT LOCATOR

DECISION ON PETITION
UNDER 37 C.F.R. §1.47(a)

Dear Mr. Pike:

You are named as a joint inventor in the above-identified United States patent application filed under the provisions of 35 U.S.C. 116 (United States Code) and 37 CFR 1.47(a), Rules of Practice in Patent Cases. Should a patent be granted on the application you will be designated therein as a joint inventor.

As a named inventor you are entitled to inspect any paper in the file wrapper of the application, order copies of all or any part thereof (at a prepaid cost per 37 CFR 1.19) or make your position of record in the application. Alternatively, you may arrange to do any of the preceding through a registered patent attorney or agent presenting written authorization from you. If you care to join the application, the attorney of record below would presumably assist you. Joining in the application would entail the filing of an appropriate oath or declaration by you pursuant to 37 CFR 1.63.

Telephone inquiries regarding this communication should be directed to the undersigned at (571) 272-3225. Requests for information regarding your application should be directed to the File Information Unit at (703) 308-2733. Information regarding how to pay for and order a copy of the application, or a specific paper in the application, should be directed to the Certification Division at (703) 308-9726 or 1-800-972-6382 (outside the Washington D.C. area).

Paul Shanoski

Paul Shanoski
Senior Attorney
Office of Petitions
United States Patent and Trademark Office

cc: TOWNSEND AND TOWNSEND AND CREW, LLP
TWO EMBARCADERO CENTER
EIGHTH FLOOR
SAN FRANCISCO CA 94111-3834

SPE RESPONSE FOR CERTIFICATE OF CORRECTION

DATE : 5-25-07

Paper No.: _____

TO SPE OF : **Technology Center** 2612

10/855865

SUBJECT : Request for Certificate of Correction on Patent No.: 7158010 B2

A response is requested with respect to the accompanying request for a certificate of correction.

Please complete this form and return with file, within **7** days to:

Palm location **7580, Certificates of Correction Branch – South Tower – 9A22**

If response is for an IFW, **return to employee (named below) via PUBSCofC Team in MADRAS.**

With respect to the change(s) requested, correcting Office and/or Applicant's errors, should the patent read as shown in the certificate of correction (COCIN)? No new matter should be introduced, nor should the scope or meaning of the claims be changed.

Elisha Evans

Thank You For Your Assistance

Certificates of Correction Branch

Tel. No. 703-308-9390 EXT 110

The request for issuing the above-identified correction(s) is hereby:

Note your decision on the appropriate box.

- ☒ **Approved** — **All** changes apply.
- ☐ **Approved in Part** — Specify below which changes **do not** apply.
- ☐ **Denied** — State the reasons for denial below.

Comments:

_____

_____

_____

_____

_____

SPE

2612

Art Unit

SPE RESPONSE FOR CERTIFICATE OF CORRECTION

Paper No.: _____

DATE : August 17, 2006

TO SPE OF : ART UNIT 3651

SUBJECT : Request for Certificate of Correction for Appl. No.: 10/855878 Patent No.: 7,032,741

Please respond to this request for a certificate of correction within 7 days.

Please review the requested changes/corrections as shown in the **COCIN** document(s) in the IFW application image. No new matter should be introduced, nor should the scope or meaning of the claims be changed.

Please complete the response (see below) and forward the completed response to scanning using document code **COCX**.

Magdalene Talley

Certificates of Correction Branch

703-308-9390 ext. 116

Thank You For Your Assistance

The request for issuing the above-identified correction(s) is hereby:

Note your decision on the appropriate box.

- ☐ **Approved** — **All** changes apply.
- ☐ **Approved in Part** — Specify below which changes **do not** apply.
- ☑ **Denied** — State the reasons for denial below.

Comments: No IDS was submitted in this case

GENE O. CRAWFORD
SUPERVISORY PATENT EXAMINER

SPE

3651
Art Unit

PTOL-306 (REV. 7/03)

U.S. DEPARTMENT OF COMMERCE Patent and Trademark Office

Response to Rule 312 Communication	Application No.	Applicant(s)	
	10/855,878	FORTENBERY ET AL.	
	Examiner	Art Unit	
	Joseph A. Dillon, Jr.	3651	

-- The MAILING DATE of this communication appears on the cover sheet with the correspondence address --

1. ☒ The amendment filed on *13 July 2006* under 37 CFR 1.312 has been considered, and has been:

a) ☐ entered.

b) ☐ entered as directed to matters of form not affecting the scope of the invention.

c) ☐ disapproved because the amendment was filed after the payment of the issue fee.
Any amendment filed after the date the issue fee is paid must be accompanied by a petition under 37 CFR 1.313(c)(1) and the required fee to withdraw the application from issue.

d) ☒ disapproved. See explanation below.

e) ☐ entered in part. See explanation below.

No IDS was submitted in this case.

JOE DILLON, JR.
PRIMARY PATENT EXAMINER

SPE RESPONSE FOR CERTIFICATE OF CORRECTION

Paper No.: _____

DATE : August 17, 2006

TO SPE OF : ART UNIT 3651

SUBJECT : Request for Certificate of Correction for Appl. No.: 10/855878 Patent No.: 7,032,741

Please respond to this request for a certificate of correction within 7 days.

Please review the requested changes/corrections as shown in the **COCIN** document(s) in the IFW application image. No new matter should be introduced, nor should the scope or meaning of the claims be changed.

Please complete the response (see below) and forward the completed response to scanning using document code **COCX**.

Magdalene Talley

Certificates of Correction Branch

703-308-9390 ext. 116

Thank You For Your Assistance

The request for issuing the above-identified correction(s) is hereby:

Note your decision on the appropriate box.

- ☐ **Approved** — **All** changes apply.
- ☐ **Approved in Part** — Specify below which changes **do not** apply.
- ☑ **Denied** — State the reasons for denial below.

Comments: It changes the scope of the claims.

GENE O. CRAWFORD
SUPERVISORY PATENT EXAMINER

SPE

3657
Art Unit

PTOL-306 (REV. 7/03)

U.S. DEPARTMENT OF COMMERCE Patent and Trademark Office

Response to Rule 312 Communication	Application No.	Applicant(s)	
	10/855,878	FORTENBERY ET AL.	
	Examiner	Art Unit	
	Joseph A. Dillon, Jr.	3651	

-- The MAILING DATE of this communication appears on the cover sheet with the correspondence address --

1. ☒ The amendment filed on *24 July 2006* under 37 CFR 1.312 has been considered, and has been:

a) ☐ entered.

b) ☐ entered as directed to matters of form not affecting the scope of the invention.

c) ☐ disapproved because the amendment was filed after the payment of the issue fee.
Any amendment filed after the date the issue fee is paid must be accompanied by a petition under 37 CFR 1.313(c)(1) and the required fee to withdraw the application from issue.

d) ☒ disapproved. See explanation below.

e) ☐ entered in part. See explanation below.

Changing apparatus to device changes the scope of the claims; prohibited in a 312 amendment(s). Further, it fails to conform to current US practice as the invention(s) is termed an apparatus by the applicant; the device being a part of the apparatus. It is therfore is not the first reference in a dependent claim. It should say "the apparatus ...wherein the device....

JOE DILLON, JR.
PRIMARY PATENT EXAMINER

SPE RESPONSE FOR CERTIFICATE OF CORRECTION

Paper No.: _____

DATE : March 13, 2007

TO SPE OF : ART UNIT 3651

SUBJECT : Request for Certificate of Correction for Appl. No. 10/855878 patent No.: 7032741

Please respond to this request for a certificate of correction within 7 days.

Please review the requested changes/corrections as shown in the **COCIN** document(s) in the IFW application image. No new matter should be introduced, nor should the scope or meaning of the claims be changed.

Please complete the response (see below) and forward the completed response to scanning using document code **COCX**.

Magdalene Talley

Certificates of Correction Branch

703-308-9390 ext. 116

Thank You For Your Assistance

The request for issuing the above-identified correction(s) is hereby:

Note your decision on the appropriate box.

- ☐ **Approved** — **All** changes apply.
- ☐ **Approved in Part** — Specify below which changes **do not** apply.
- ☑ **Denied** — State the reasons for denial below.

Comments:

No IDS has been submitted in this case according to systems accessible to the examiner.

Further inquiries should be directed to COC Branch

Ex Dellon

GENE O. CRAWFORD

~~SUPERVISORY PATENT EXAMINER~~ SPE

3651

Art Unit

PTOL-306 (REV. 7/03)

U.S. DEPARTMENT OF COMMERCE Patent and Trademark Office

UNITED STATES PATENT AND TRADEMARK OFFICE

Commissioner for Patents
United States Patent and Trademark Office
P.O. Box 1450
Alexandria, VA 22313-1450
www.uspto.gov

Date Mailed : August 1, 2007
Serial No. : 10/855878
Patent No. :7,032,741 B1
Patent Issued : May 27, 2004
Inventor(s) : J. David Fortenbery
Title :CONVEYOR SYSTEM HAVING A SPEED CONTROL CHUTE

Re: Request for Certificate of Correction

Consideration has been given your request for the issuance of a certificate of correction for the above-identified patent.

Respecting the alleged error noted in your request, no IDS have been submitted in this case according to systems accessible to re-examine.

Further consideration will be given upon receipt of a Request for Reconsideration, which should be directed to Decisions and Certificate of Correction Branch. Requests for Reconsideration should be accompanied by additional support (e.g. copy of amendments, post card receipts. PTOL 1449 or 892, etc.), containing requested data or changes) and/or brief statements of facts, as requested.

In view of the foregoing your request is hereby denied.

Magdalene Talley
For Cecelia B. Newman, Supervisor
Decision and Certificate
Of Correction Branch
(703)308-9390 ext. 116
Fax (571) 270-9942

Wood, Herron & Evans, L.L.P.
2700 Carew Tower
Cincinnati, OH 45202

CBN/mt

UNITED STATES PATENT AND TRADEMARK OFFICE

Commissioner for Patents
United States Patent and Trademark Office
P.O. Box 1450
Alexandria, VA 22313-1450
www.uspto.gov

COPY MAILED

NOV 29 2007

OFFICE OF PETITIONS

KRATZ QUINTOS & HANSON LLP
1420 K STREET, NW
SUITE 400
WASHINGTON DC 20005

In re Application of	:	
Numakami, et al.	:	
Application No. 10/855,883	:	ON PETITION
Filed: May 28, 2004	:	
Attorney Docket No. 040260	:	

This is a decision on the petition under 37 CFR 1.137(b), filed August 10, 2007, to revive the above-identified application.

The petition under 37 CFR 1.137(b) is **GRANTED**.

The above-identified application became abandoned for failure to timely file a response to the non-final Office action mailed July 20, 2006. This Office action set a shortened statutory period for reply of three (3) months. No reply having been received, the application became abandoned on October 21, 2006. The Office mailed a Notice of Abandonment on January 31, 2007.

With the instant petition, applicants paid the petition fee, made the proper statement of unintentional delay, and submitted the required reply in the form of an Amendment.

Pursuant to 37 CFR 1.136, an extension of time must be filed prior to the expiration of the maximum period obtainable for reply to avoid abandonment. Accordingly, since the $1020 extension of time fee submitted with the petition on August 10, 2007 was subsequent to the maximum period obtainable for reply (January 20, 2007), this fee has been refunded to petitioner's Deposit Account No. 01-2340.

The matter is being forwarded to Group Art Unit 2182 for consideration of the Amendment filed August 10, 2007.

Telephone inquiries concerning this decision should be directed to the undersigned at (571)272-3207.

Cliff Congo
Petitions Attorney
Office of Petitions

UNITED STATES PATENT AND TRADEMARK OFFICE

Commissioner for Patents
United States Patent and Trademark Office
P.O. Box 1450
Alexandria, VA 22313-1450
www.uspto.gov

Paper No.

PATENT DEPARTMENT (51851)
KILPATRICK STOCKTON LLP
1001 WEST FOURTH STREET
WINSTON-SALEM NC 27101

MAILED

MAR 16 2009

OFFICE OF PETITIONS

In re Application of :
Olien et al. :
Application No. 10/855,902 :
Filed: May 27, 2004 :
Atty Docket No. IMM209 :

ON APPLICATION FOR
PATENT TERM ADJUSTMENT

This is in response to the Petition Regarding Patent Term Adjustment (PTA) Indicated in Notice of Allowance filed February 6, 2009. Applicants request that the patent term adjustment should be increased from eight hundred sixty-four (864) to (at least) one thousand four hundred two (1402) days, but no less than one thousand two hundred eighty-six (1286) days. Referring to Wyeth v. Dudas, No. 07-1492 (D.D.C. September 30, 2008), applicants request this correction on the basis that the Office will take in excess of three years to issue this patent.

As the instant application for patent term adjustment requests reconsideration of the patent term adjustment as it relates to the Office's failure to issue the patent within 3 years of the filing date, a decision is being **held in abeyance** until after the actual patent date. Knowledge of the actual date the patent issues is required to calculate the amount, if any, of additional patent term patentee is entitled to for Office failure to issue the patent within 3 years. See § 1.703(b).

Applicant is given TWO (2) MONTHS from the issue date of the patent to file a written request for reconsideration of the patent term adjustment for Office failure to issue the patent within 3 years. A copy of this decision should accompany the request. Applicant may seek such consideration without payment of an additional fee. However, as to all other bases for seeking reconsideration of the patent term adjustment indicated in the patent, all requirements of § 1.705(d) must be met.

Requests for reconsideration on other bases must be timely filed and must include payment of the required fee.

Rather than file the request for reconsideration of Patent Term Adjustment at the time of the mailing of the notice of allowance, applicant is advised that they may wait until the time of the issuance of the patent and file a request for reconsideration of the patent term pursuant to 37 CFR 1.705(d). The USPTO notes that it does not calculate the amount of time earned pursuant to 37 CFR 1.702(b) until the time of the issuance of the patent and accordingly, the Office will consider any request for reconsideration of the patent term adjustment due to an error in the calculation of 37 CFR 1.702(b) to be timely if the request for reconsideration is filed within two months of the issuance of the patent.

The Office acknowledges submission of the $200.00 fee set forth in 37 CFR 1.18(e). No additional fees are required.

The application is being forwarded to the Office of Data Management for issuance of the patent. The revised patent term adjustment indicated on the patent (as shown on the Issue Notification mailed about three weeks prior to patent issuance) will include any additional adjustment accrued both for Office delay in issuing the patent more than four months after payment of the issue fee and satisfaction of all outstanding requirements, and for the Office taking in excess of three years to issue the patent (to the extent that the three-year period does not overlap with periods already accorded).

Telephone inquiries specific to this decision should be directed to the undersigned at (571) 272-3219.

Nancy Johnson
Senior Petitions Attorney
Office of Petitions

UNITED STATES PATENT AND TRADEMARK OFFICE

COMMISSIONER FOR PATENTS
UNITED STATES PATENT AND TRADEMARK OFFICE
P.O. BOX 1450
ALEXANDRIA, VA 22313-1450
www.uspto.gov

Paper No.

COPY MAILED
FEB 18 2010

PATENT DEPARTMENT (51851)
KILPATRICK STOCKTON LLP
1001 WEST FOURTH STREET
WINSTON-SALEM NC 27101

In re Patent No. 7,522,152	:	DECISION ON REQUEST
Olien et al.	:	FOR
Issue Date: April 21, 2009	:	RECONSIDERATION OF
Application No. 10/855,902	:	PATENT TERM ADJUSTMENT
Filed: May 27, 2004	:	and
Atty Docket No. IMM209	:	NOTICE OF INTENT TO ISSUE
	:	CERTIFICATE OF CORRECTION

This is a decision on the petition filed on June 2, 2009, which is being treated as a petition under 37 CFR 1.705(d) requesting that the patent term adjustment indicated on the above-identified patent be corrected to indicate that the term of the above-identified patent is extended or adjusted by one thousand three hundred fifty-two (1352) days.

The petition to correct the patent term adjustment indicated on the above-identified patent to indicated that the term of the above-identified patent is extended or adjusted by one thousand three hundred fifty-two (1352) days is **GRANTED**.

The application is being forwarded to the Certificates of Branch for issuance of a certificate of correction. The Office will issue a certificate of correction indicating that the term of the above-identified patent is extended or adjusted by **one thousand three hundred fifty-two (1352)** days.

Telephone inquiries specific to this matter should be directed to the undersigned at (571) 272-3219.

Nancy Johnson
Senior Petitions Attorney
Office of Petitions

Enclosure: Copy of DRAFT Certificate of Correction

UNITED STATES PATENT AND TRADEMARK OFFICE

CERTIFICATE OF CORRECTION

PATENT : 7,522,152

DATED : **April 21, 2009** **DRAFT**

INVENTOR(S) : Olien et al.

It is certified that error appears in the above-identified patent and that said Letters Patent is hereby
corrected as shown below:

On the cover page,

[*] Notice: Subject to any disclaimer, the term of this patent is extended or adjusted under 35 USC 154(b) by 856 days

Delete the phrase "by 856 days" and insert – by 1352 days--

UNITED STATES PATENT AND TRADEMARK OFFICE

UNITED STATES DEPARTMENT OF COMMERCE
United States Patent and Trademark Office
Address: COMMISSIONER FOR PATENTS
P.O. Box 1450
Alexandria, Virginia 22313-1450
www.uspto.gov

APPL NO.	FILING OR 371 (c) DATE	ART UNIT	FIL FEE REC'D	ATTY.DOCKET NO	DRAWINGS	TOT CLMS	IND CLMS
10/855,920	05/27/2004	1744	448	DALS-001AX	6	27	3

CONFIRMATION NO. 8412

CORRECTED FILING RECEIPT

OC000000013695629

207
WEINGARTEN, SCHURGIN, GAGNEBIN & LEBOVICI LLP
TEN POST OFFICE SQUARE
BOSTON, MA 02109

Date Mailed: 09/02/2004

Receipt is acknowledged of this regular Patent Application. It will be considered in its order and you will be notified as to the results of the examination. Be sure to provide the U.S. APPLICATION NUMBER, FILING DATE, NAME OF APPLICANT, and TITLE OF INVENTION when inquiring about this application. Fees transmitted by check or draft are subject to collection. Please verify the accuracy of the data presented on this receipt. **If an error is noted on this Filing Receipt, please write to the Office of Initial Patent Examination's Filing Receipt Corrections, facsimile number 703-746-9195. Please provide a copy of this Filing Receipt with the changes noted thereon. If you received a "Notice to File Missing Parts" for this application, please submit any corrections to this Filing Receipt with your reply to the Notice. When the USPTO processes the reply to the Notice, the USPTO will generate another Filing Receipt incorporating the requested corrections (if appropriate).**

Applicant(s)

Robert J. Dalias, Salem, NH;

Power of Attorney:

Stanley Schurgin–20979
Charles Gagnebin III–25467
Victor Lebovici–30864
Beverly E. Hjorth–32033
Holliday C. Heine–34346
James F. Thompson Jr.–36699
Gordon Moriarty–38973

Domestic Priority data as claimed by applicant

This application is a CIP of 10/692,341 10/23/2003

Foreign Applications

If Required, Foreign Filing License Granted: 07/23/2004

The number of your priority application, to be used for filing abroad under the Paris Convention is,
US10/855,920

Projected Publication Date: 04/28/2005

Non-Publication Request: No

Early Publication Request: No

**** SMALL ENTITY ****

Title

Grill brush and grill cleaning system

Preliminary Class

015

LICENSE FOR FOREIGN FILING UNDER
Title 35, United States Code, Section 184
Title 37, Code of Federal Regulations, 5.11 & 5.15

GRANTED

The applicant has been granted a license under 35 U.S.C. 184, if the phrase "IF REQUIRED, FOREIGN FILING LICENSE GRANTED" followed by a date appears on this form. Such licenses are issued in all applications where the conditions for issuance of a license have been met, regardless of whether or not a license may be required as set forth in 37 CFR 5.15. The scope and limitations of this license are set forth in 37 CFR 5.15(a) unless an earlier license has been issued under 37 CFR 5.15(b). The license is subject to revocation upon written notification. The date indicated is the effective date of the license, unless an earlier license of similar scope has been granted under 37 CFR 5.13 or 5.14.

This license is to be retained by the licensee and may be used at any time on or after the effective date thereof unless it is revoked. This license is automatically transferred to any related applications(s) filed under 37 CFR 1.53(d). This license is not retroactive.

The grant of a license does not in any way lessen the responsibility of a licensee for the security of the subject matter as imposed by any Government contract or the provisions of existing laws relating to espionage and the national security or the export of technical data. Licensees should apprise themselves of current regulations especially with respect to certain countries, of other agencies, particularly the Office of Defense Trade Controls, Department of State (with respect to Arms, Munitions and Implements of War (22 CFR 121-128)); the Office of Export Administration, Department of Commerce (15 CFR 370.10 (j)); the Office of Foreign Assets Control, Department of Treasury (31 CFR Parts 500+) and the Department of Energy.

NOT GRANTED

No license under 35 U.S.C. 184 has been granted at this time, if the phrase "IF REQUIRED, FOREIGN FILING LICENSE GRANTED" DOES NOT appear on this form. Applicant may still petition for a license under 37 CFR 5.12, if a license is desired before the expiration of 6 months from the filing date of the application. If 6 months has lapsed from the filing date of this application and the licensee has not received any indication of a secrecy order under 35 U.S.C. 181, the licensee may foreign file the application pursuant to 37 CFR 5.15(b).

UNITED STATES POSTAL SERVICE

Track & Confirm

Shipment Details

You entered EV00 9952 746U S

Your item was delivered at 9:34 am on May 28, 2004 in ALEXANDRIA, VA 22313 to PATENT OFFICE. The item was signed for by M BOSTON.

Here is what happened earlier:

- ARRIVAL AT UNIT, May 28, 2004, 8:18 am, DULLES, VA 20102
- ACCEPTANCE, May 27, 2004, 3:34 pm, BOSTON, MA 02109

Track & Confirm

Enter label number:

Track & Confirm FAQs Go >

Notification Options

- **Track & Confirm by email** What is this? Go >
- **Request Proof of Delivery** What is this? Go >

POSTAL INSPECTORS
Preserving the Trust

site map contact us government services

Copyright © 1999-2002 USPS. All Rights Reserved. Terms of Use Privacy Policy

UNITED STATES PATENT AND TRADEMARK OFFICE

Commissioner for Patents
United States Patent and Trademark Office
P.O. Box 1450
Alexandria, VA 22313-1450
www.uspto.gov

MAR 16 2007

LADAS & PARRY LLP
224 SOUTH MICHIGAN AVENUE
SUITE 1600
CHICAGO IL 60604

In re Application of	:
Jong-In Hong et al	:
Serial No.: 10/855,940	: PETITION DECISION
Filed: May 27, 2004	:
Attorney Docket No.: CU-3754	:

This is a decision on the PETITION FOR ACCEPTANCE OF COLOR DRAWINGS UNDER 37 CFR 1.84(a)(2). The petition was filed May 27, 2004. Entry of color drawings requires: 1) three sets of the color drawings, 2) a proper amendment to the specification indicating color photographs or drawings are present in the file, and 3) the required fee under 37 CFR 1.17(h).

A review of the application record indicates that the petition meets all of the requirements for acceptance of color drawings. This is not to be construed that all of the drawings are accepted, only that the color drawings are acceptable.

The petition is **GRANTED**.

Should there be any questions with respect to this decision, please contact William R. Dixon, Jr., by mail addressed to: Director, Technology Center 1600, Washington, D.C. 20231, or by telephone at 571-272-0519 or by facsimile transmission at 571-273-8300.

William R. Dixon, Jr.
Special Program Examiner
Technology Center 1600

UNITED STATES PATENT AND TRADEMARK OFFICE

Commissioner for Patents
United States Patent and Trademark Office
P.O. Box 1450
Alexandria, VA 22313-1450
www.uspto.gov

COPY MAILED

JUL 06 2007

OFFICE OF PETITIONS

MORRISON & FOERSTER LLP
1650 TYSONS BOULEVARD
SUITE 400
MCLEAN, VA 22102

In re Application of
Rolf NEUBERT
Application No. 10/855,946
Filed: May 28, 2004
Attorney Docket No. 54822007400

DECISION ON PETITION
TO WITHDRAW
FROM RECORD

This is a decision on the Request to Withdraw as attorney or agent of record under 37 C.F.R. § 1.36(b), filed May 2, 2007.

The request is **APPROVED**.

A grantable request to withdraw as attorney/agent of record must be signed by every attorney/agent seeking to withdraw or contain a clear indication that one attorney is signing on behalf of another/others. A request to withdraw will not be approved unless at least 30 (thirty) days would remain between the date of approval and the later of the expiration date of a time to file a response or the expiration date of the maximum time period which can be extended under 37 C.F.R. § 1.136(a).

The request was signed by Deborah S. Gladstein on behalf of all attorneys of record who are associated with customer No. 25227.

All attorneys/agents associated with Customer Number 25227 have been withdrawn.

Applicant is reminded that there is no attorney of record at this time.

The request to change the correspondence of record is not acceptable as the requested correspondence address is not that of: (1) the first named signing inventor; or (2) an intervening assignee of the entire interest under 37 C.F.R 3.71. All future communications from the Office will be directed to the first named signing inventor at the first copied address below until otherwise properly notified by the applicant.

In order to request or take action in a patent matter, the assignee must establish its ownership of the patent to the satisfaction of the Director. In this regard, a Statement under 37 CFR 3.73(b) must have either: (i) documentary evidence of a chain of title from the original owner to the assignee (*e.g.*, copy of an executed assignment), and a statement affirming that the documentary evidence of the chain of title from the original owner to the assignee was or concurrently is being submitted for recordation pursuant to § 3.11; or (ii) a statement specifying where documentary evidence of a chain of title from the original owner to the assignee is recorded in the assignment records of the Office (*e.g.*, reel and frame number).

There are no pending Office actions at the present time.

Telephone inquiries concerning this decision should be directed to Diane Goodwyn at 571-272-6735.

April Wise
Petitions Examiner
Office of Petitions

cc: ROLF NEUBERT
ROMERWEG 4
UNTERHACHING, GERMANY

cc: SLATER & MATSIL L.L.P.
17950 PRESTON ROAD,
SUITE 1000
DALLAS, TX 75252

UNITED STATES PATENT AND TRADEMARK OFFICE

UNITED STATES DEPARTMENT OF COMMERCE
United States Patent and Trademark Office
Address: COMMISSIONER FOR PATENTS
P.O. Box 1450
Alexandria, Virginia 22313-1450
www.uspto.gov

APPLICATION NUMBER	FILING OR 371 (c) DATE	FIRST NAMED APPLICANT	ATTY. DOCKET NO./TITLE
10/855,946	05/28/2004	Rolf Neubert	543822007400

CONFIRMATION NO. 9030

OC000000024337429

25227
MORRISON & FOERSTER LLP
1650 TYSONS BOULEVARD
SUITE 400
MCLEAN, VA 22102

Date Mailed: 06/13/2007

NOTICE REGARDING CHANGE OF POWER OF ATTORNEY

This is in response to the Power of Attorney filed 05/02/2007.

- The withdrawal as attorney in this application has been accepted. Future correspondence will be mailed to the new address of record. 37 CFR 1.33.

Diane Goodwyn

Office of Initial Patent Examination (571) 272-4000 or 1-800-PTO-9199
FORMER ATTORNEY/AGENT COPY

UNITED STATES PATENT AND TRADEMARK OFFICE

Commissioner for Patents
United States Patent and Trademark Office
P.O. Box 1450
Alexandria, VA 22313-1450
www.uspto.gov

ROBERTS MLOTKOWSKI
SAFRAN & COLE, P.C.
P.O. BOX 10064
MCLEAN, VA 22102-8064

COPY MAILED

MAY 08 2008

OFFICE OF PETITIONS

In re Patent No. 6,991,476	:	
Issue Date: January 31, 2006	:	
Application No. 10/855,956	:	ON PETITION
Filed: May 28, 2004	:	
Attorney Docket No. 740116-515	:	

This is a decision on the petition under 37 CFR 1.182, filed January 3, 2008, requesting issuance of a duplicate Letters Patent for the above-identified application.

The petition is **DISMISSED AS MOOT**.

The January 9, 2008 request that the petition for issuance of a duplicated ribboned Letters Patent to be withdrawn. The petitioner states, the owner of the patent has decided that he does not wish to incur any costs in connection with this patent.

Upon petitioner's request, the petition under 37 CFR 1.182 is hereby withdrawn.

Telephone inquiries concerning this decision should be directed to Irvin Dingle at (571) 272-3210.

Irvin Dingle
Petitions Examiner
Office of Petitions

UNITED STATES PATENT AND TRADEMARK OFFICE

COMMISSIONER FOR PATENTS
UNITED STATES PATENT AND TRADEMARK OFFICE
P.O. BOX 1450
ALEXANDRIA, VA 22313-1450
WWW.USPTO.GOV

Paper No. None

OBLON, SPIVAK, MCCLELLAND, MAIER & NEUSTADT, P.C.
1940 DUKE STREET
ALEXANDRIA VA 22314

COPY MAILED

SEP 24 2004

OFFICE OF PETITIONS

In re Application of
Yutaka Minami et al.
Application No. 10/855,964
Filed: May 28, 2004
Attorney Docket No.:
253677US0DIV
Title: PROPYLENE POLYMER AND COMPOSITION CONTAINING THE SAME, MOLDED OBJECT AND LAMINATE COMPRISING THESE, AND PROCESSES FOR PRODUCING PROPYLENE POLYMER AND COMPOSITION CONTAINING THE SAME

DECISION ON PETITION

This is a decision on the petition filed August 18, 2004, requesting that the above-identified application, including page 233 of the specification, be accorded a filing date of May 28, 2004 as part of the original disclosure.

The application was deposited on May 28, 2004. However, on July 26, 2004, the Office of Initial Patent Examination (OIPE) mailed a "Notice to File Missing Parts of Nonprovisional Application" (notice), stating that the application had been accorded a filing date, and advising applicants that page 233 of the specification appeared to have been omitted. The notice set a two-month period of reply, and further indicated that the filing fee, fees for the submission of additional claims, and a surcharge for the late submission of an oath or declaration would be required.

In response, on August 18, 2004, applicants filed the present petition. The petition is further accompanied by a copy of page 233 of the specification, along with a copy of applicants' postcard receipt acknowledging receipt of "419 pp. Specification/ 64 Claims/ Drawings 0 Sheets and 6 Pages Application Data Sheet" in the United

States Patent and Trademark Office (Office) on May 28, 2004. Applicants request that page 233 of the specification be accorded a filing date of May 28, 2004.

Receipt of the filing fee, a declaration, the surcharge associated with the late submission of an oath or declaration, and the excess claim fees is acknowledged.

It is noted that 390 pages of specification, 27 pages of claims (containing 64 claims), and a 1 page abstract have been located in the electronic file.

Upon review of the record, the above-mentioned page has not been located among the application papers. However, the evidence is convincing that the application papers deposited on May 28, 2004 included page 233 of the specification, and this sheet was subsequently misplaced in the Office.

Therefore, the application, including page 233 of the specification, was complete on filing and entitled to a filing date of May 28, 2004 as part of the original disclosure.

Accordingly, the petition is **GRANTED**.

The portion of the notice mailed July 26, 2004 pertaining to the missing page of specification was sent in error, and this portion is hereby **VACATED**. Therefore, no petition fee is necessary. The petition fee of $130 has been refunded to Petitioner's Deposit Account, as authorized in the petition.

The application file is being returned to OIPE for further processing with a filing date of May 28, 2004, using the original application papers filed on that date, as well as page 233 of the specification submitted on May 28, 2004, and for noting in Office records that this sheet was present on filing.

Telephone inquiries regarding this decision should be directed to the undersigned at (703) 305-0011. Please note that on approximately September 28, 2004, the Office of Petitions will relocate to the new PTO location in Alexandria. Although the mailing address will remain the same, the general phone number for the Office of Petitions which should be used for status requests will change to 571-272-3282, and the telephone number for the undersigned will change to 571-272-3225.

Paul Shanoski
Senior Attorney
Office of Petitions
United States Patent and Trademark Office

OIPE IAP44
AUG 30 2007
PATENT & TRADEMARK OFFICE

Attorney Docket No. 081468-0309798
Client Reference: P-1567.010-US

PATENT

IN THE UNITED STATES PATENT AND TRADEMARK OFFICE

In re application of: ANTOINE HENDRIK VERWEIJ, et al.

Application No.: 10/855,976 Group Art Unit: 2851

Filed: May 28, 2004 Examiner: MICHAEL LIU

Confirmation No.: 9351

For: MASKING DEVICE, LITHOGRAPHIC APPARATUS, AND DEVICE MANUFACTURING METHOD

LETTER REQUESTING DECISION ON PETITION

Commissioner for Patents
P. O. Box 1450
Alexandria, VA 22313-1450

Sir:

Applicants submit that on January 13, 2005, a Petition to Correct Inventorship along with the required documents were filed to add inventor **Jan VAN EIJK** to the above-referenced application. A response to the Petition was never received. Attached is a copy of the filed documents along with the stamped receipt.

Applicants respectfully request that a Decision on Petition be issued in the above-referenced application.

Respectfully submitted,

PILLSBURY WINTHROP SHAW PITTMAN LLP

By _____
Christophe F. Lair
Registration No. 54248
Telephone: (703) 770.7797

Date: August 30, 2007
P.O. Box 10500
McLean, VA 22102
Customer No.: 00909

22

OIPE TAP44
AUG 30 2007
PATENT & TRADEMARK OFFICE

RECEIPT FROM PTO FOR INDICATED ITEMS

OIPE JC25
JAN 13 2005
PATENT & TRADEMARK OFFICE

(Do NOT Use for New or Continuing Applications of Any Kind)
Use 2 postcards for all New Applications (including cont/Div/CIP)
Use this sheet when filing CPA or RCE

Appln. No: 10/855,976	Atty: E. Hernandez/PARRA_RS
First Inventor: ANTOINE HENDRIK VERWEIJ	Date: January 13, 2005
Title: MASKING DEVICE, LITHOGRAPHIC APPARATUS, AND DEVICE MANUFACTURING METHOD	Attorney Docket No: 081468-0309798

ENCLOSED:

- ☒ PETITION TO CORRECT INVENTORSHIP UNDER 37 CFR §1.48(a)
- ☒ AFFIDAVIT OF JAN VAN EIJK
- ☒ STATEMENT OF OWNERSHIP PER §3.73 AND CONSENT OF ASSIGNEE
- ☒ NEWLY EXECUTED DECLARATION (6 PAGES)
- ☒ FEE TRANSMITTAL

$ 130.00 Total Fee Charged to Deposit Account

CURRENT DUE DATE:

30504900_1.DOC

OIPE IAP44
AUG 30 2007
PATENT & TRADEMARK OFFICE

COPY

PTO/SB/17 (12-04)
Approved for use through 07/31/2006. OMB 0651-0032
U.S. Patent and Trademark Office; U.S. DEPARTMENT OF COMMERCE
Under the Paperwork Reduction Act of 1995, no persons are required to respond to a collection of information unless it displays a valid OMB control number.

Effective on 12/08/2004.
Fees pursuant to the Consolidated Approriations Act. 2005 (H.R. 4818).

FEE TRANSMITTAL for FY 2005

☐ Applicant claims small entity status. See 37 CFR 1.27

TOTAL AMOUNT OF PAYMENT ($) 130

Complete if Known	
Application Number	10/855,976
Filing Date	May 28, 2004
First Named Inventor	ANTOINE HENDRIK VERWEIJ
Examiner Name	
Art Unit	1756
Attorney Docket No.	081468-0309798

METHOD OF PAYMENT (check all that apply)

☐ Check ☐ Credit Card ☐ Money Order ☐ None ☐ Other (please identify):_____

☒ Deposit Account Deposit Account Number: 033975 Deposit Account Name: PILLSBURY WINTHROP LLP

For the above-identified deposit account, the Director is hereby authorized to: (check all that apply)

☒ Charge fee(s) indicated below ☐ Charge fee(s) indicated below, **except for the filing fee**

☒ Charge any additional fee(s) or underpayment of fees(s) under 37 CFR 1.16 and 1.17 ☒ Credit any overpayments

WARNING: Information on this form may become public. Credit Card Information should not be included on this form. Provide credit card information and authorization on PTO-2038.

FEE CALCULATION

1. BASIC FILING, SEARCH, AND EXAMINATION FEES

	FILING FEES		SEARCH FEES		EXAMINATION FEES		
Application Type	**Fee ($)**	**Small Entity Fee ($)**	**Fee ($)**	**Small Entity Fee ($)**	**Fee ($)**	**Small Entity Fee ($)**	**Fee Paid ($)**
Utility	300	150	500	250	200	150	_____
Design	200	100	100	50	130	65	_____
Plant	200	100	300	150	160	80	_____
Reissue	300	150	500	250	600	300	_____
Provisional	200	100	0	0	0	0	_____

2. EXCESS CLAIM FEES

Fee Description	**Fee ($)**	**Small Entity Fee ($)**
Each claim over 20 or, for Reissues, each claim over 20 and more than in the original patent	50	25
Each independent claim over 3 or, for Reissues, each independent claim more than in the original patent	200	100
Multiple dependent claims	360	180

Total Claims _____ - 20 or HP = _____ **Extra Claims** X **Fee ($)** _____ = **Fee Paid ($)** _____

HP = highest number of total claims paid for, if greater than 20

Multiple Dependent Claims **Fee ($)** _____ **Fee Paid ($)** _____

Indep. Claims _____ - 3 or HP = _____ **Extra Claims** X **Fee ($)** _____ = **Fee Paid ($)** _____

HP = highest number of independent claims paid for, if greater than 3

3. APPLICATION SIZE FEE

If the specification and drawings exceed 100 sheets of paper, the application size fee due is $250 ($125 for small entity) for each additional 50 sheets or fraction thereof. See 35 U.S.C. 41(a)(1)(G) and 37 CFR 1.16(s).

Total Sheets _____ - 100 = _____ **Extra Sheets** /50= _____ **Number of each additional 50 or fraction thereof** (round up to a whole number) x **Fee ($)** 250.00 = **Fee Paid ($)** _____

4. OTHER FEE(S)

Fee Paid ($)

Non-English Specification, 130 fee (no small entity discount) _____

Other: PETITION FEE 130.00

SUBMITTED BY

Signature	[signature]	Registration No. (Attorney/Agent) 47641	Telephone 703.905.2088
Name (Print/Type)	E. Rico Hernandez		Date January 13, 2005

This collection of information is required by 37 CFR 1.136. The information is required to obtain or retain a benefit by the public which is to file (and by the USPTO to process) an application. Confidentiality is governed by 35 U.S.C. 122 and 37 CFR 1.14. This collection is estimated to take 30 minutes to complete, including gathering, preparing, and submitting the completed application form to the USPTO. Time will vary depending upon the individual case. Any comments on the amount of time you require to complete this form and/or suggestions for reducing this burden, should be sent to the Chief Information Officer, U.S. Patent and Trademark Office, U.S. Department of Commerce, P.O. Box 1450, Alexandria, VA 22313-1450. DO NOT SEND FEES OR COMPLETED FORMS TO THIS ADDRESS. **SEND TO: Commissioner for Patents, P.O. Box 1450, Alexandria, VA 22313-1450.**

If you need assistance in completing the form, call 1-800-PTO-9199 and select option 2.

OIPE IAP44
AUG 30 2007
PATENT & TRADEMARK OFFICE

IN THE UNITED STATES PATENT AND TRADEMARK OFFICE

In re PATENT APPLICATION of: Confirmation No.: 9351

Antoine Hendrik VERWEIJ,
Jacobus Frederik MOLENAAR,
Gerbrand Petrus Johannes VAN DEN HOVEN,
Michael Johannes VERVOORDELDONK,
Michel Gerardus PARDOEL,
Gerardus Johannes VERDOES, and
Jan VAN EIJK **(As Amended)**

Application No. 10/855,976 Group Art Unit: 1756

Filed: May 28, 2004 Examiner: UNKNOWN

Title: MASKING DEVICE, LITHOGRAPHIC APPARATUS, AND DEVICE MANUFACTURING METHOD

* * * * *

PETITION TO CORRECT INVENTORSHIP UNDER 37 CFR § 1.48(a)

Hon. Commissioner for Patents
PO Box 1450
Alexandria, VA 22313-1450

Sir:

It is respectfully requested that the inventorship of the above-captioned application be amended to add **Jan VAN EIJK**, who was omitted from the inventorship of the executed §1.63 declaration and assignment without any deceptive intention on their part.

As a result of this correction, the inventive entity will consist of:

Antoine Hendrik VERWEIJ,
Jacobus Frederik MOLENAAR,
Gerbrand Petrus Johannes VAN DEN HOVEN,
Michael Johannes VERVOORDELDONK,
Michel Gerardus PARDOEL,
Gerardus Johannes VERDOES, and
Jan VAN EIJK.

Applicants respectfully request that the inventorship of the above-identified application be changed in accordance with MPEP §§ 201.03 and 605.04(g) and that the file wrapper be duly marked and/or amended to accurately reflect the corrected inventorship.

In accordance with the requirements of 37 CFR § 1.48(a), the following documents are attached hereto:

a) Attached is a statement from the person being added that the error in the inventorship occurred without deceptive intention on his part.

b) Also attached is a new declaration executed by the actual inventors as required by Rule 63 (or if necessary as permitted by Rule 42, 43 or 47).

c) This application has been assigned by at least one of the original named inventors and consequently the written consent of the assignee is attached.

d) Also an Assignment executed by the actual inventors is being filed concurrently herewith.

As required by 37 CFR § 1.48(a)(4), this petition is accompanied by the requisite fee of $130.00 according to § 1.17(i). Should that fee be missing or inadequate, please charge the deficiency to our Deposit Account No. 03-3975, under Order No. 81468/309798 and proceed to consider this Petition.

Date: January 13, 2005

Respectfully submitted,
PILLSBURY WINTHROP LLP

By: _____

E. Rico Hernandez
Reg. No.: 47,641
Tel. No.: (703) 905-2088
Fax No.: (703) 905-2500

P.O. BOX 10500
McLean, VA 22102
703.905.2000

OIPE IAP44
AUG 30 2007
PATENT & TRADEMARK OFFICE

IN THE UNITED STATES PATENT AND TRADEMARK OFFICE

In re PATENT APPLICATION of: Confirmation No.: 9351

Antoine Hendrik VERWEIJ,
Jacobus Frederik MOLENAAR,
Gerbrand Petrus Johannes VAN DEN HOVEN,
Michael Johannes VERVOORDELDONK,
Michel Gerardus PARDOEL,
Gerardus Johannes VERDOES, and
Jan VAN EIJK **(As Amended)**

Application No. 10/855,976 Group Art Unit: 1756

Filed: May 28, 2004 Examiner: UNKNOWN

Title: MASKING DEVICE, LITHOGRAPHIC APPARATUS, AND DEVICE MANUFACTURING METHOD

* * * * *

AFFIDAVIT OF JAN VAN EIJK

I, **Jan VAN EIJK**, aver:

1. that I am an inventor of the above-identified patent application, relating to a Masking Device, Lithographic Apparatus, and Device Manufacturing Method;

2. that I was inadvertently and without deceptive intent on my part excluded from inventorship of this application when this application, the original declaration, and the original assignment were filed; and

3. I hereby declare that all statements made herein of my knowledge are true and that all statements made on information and belief are believed true; and further that these statements were made with knowledge that willful false statement and the like so made are punishable by fine or imprisonment, or both, under Section 1001 of the Title 18 of the United States Code and that such willful false statement may jeopardize the validity of this application or any patents issued from it.

Signature _____ Date 17-12-2009

Name: JAN VAN EIJK

OIPE IAP44
AUG 30 2007
PATENT & TRADEMARK OFFICE

IN THE UNITED STATES PATENT AND TRADEMARK OFFICE

IN RE PATENT APPLICATION

OF INVENTOR(S): Antoine Hendrik VERWEIJ,
Jacobus Frederik MOLENAAR,
Gerbrand Petrus Johannes VAN DEN HOVEN,
Michael Johannes VERVOORDELDONK,
Michel Gerardus PARDOEL,
Gerardus Johannes VERDOES, and
Jan VAN EIJK **(As Amended)**

No.	10/855,976	GROUP ART UNIT:	1756
FILED:	May 28, 2004	EXAMINER:	UNKNOWN
TITLE:	MASKING DEVICE, LITHOGRAPHIC APPARATUS, AND DEVICE MANUFACTURING METHOD		

STATEMENT OF OWNER SHIP PER § 3.73 AND CONSENT OF ASSIGNEE

Hon. Commissioner for Patents
PO Box 1450
Alexandria, VA 22313-1450

Sir:

The undersigned, being the 100% assignee of record of all rights, title and interest in the above-mentioned application, as evidenced by the attached copy of an Assignment filed on September 28, 2004 for recordation in the U.S. Patent and Trademark Office, hereby consents to amend the statement of inventorship of the subject application by the addition of **JAN VAN EIJK**, as inventor.

The undersigned person hereby states that he is empowered to sign this document on behalf of assignee.

ASML NETHERLANDS B.V.

By: _____
Name: Ton van Hoef
Title: VP and Chief IP Counsel

Date: 21 December 2004

UNITED STATES PATENT AND TRADEMARK OFFICE

COMMISSIONER FOR PATENTS
UNITED STATES PATENT AND TRADEMARK OFFICE
P.O. BOX 1450
ALEXANDRIA, VA 22313-1450
www.uspto.gov

Colin G. Sandercock, Esquire
Heller Ehrman White & McAuliffe, LLP
1717 Rhode Island Avenue, N.W.
Washington, DC 20036

COPY MAILED
JUL 21 2006
OFFICE OF PETITIONS

In re Application of	:	
Loomis, et. al.	:	DECISION ON REQUEST
Application No. 10/855,978	:	TO WITHDRAW FROM
Filed: May 28, 2004	:	RECORD
Attorney Docket No. 38228-0123	:	

This is a decision on the Request to Withdraw as attorney or agent of record under 37 CFR § 1.36(b) or 37 CFR § 10.40, filed on July 6, 2005.

The request is **NOT APPROVED**.

A review of the record shows that Colin G. Sandercock signed the request on behalf of all attorneys/agents associated with Customer No. 26633. However, Paul M. Booth, John P. Isacson, Marvin A. Motsenbocker, and Susan E. Shaw McBee currently have power of attorney in this application, but are not listed as attorneys/agents under Customer No. 26633. Since they were omitted, it is unclear whether or not the individuals listed above should be withdrawn or retain power.

All future communications from the Office will continue to be directed to the above-listed address until otherwise notified by applicant.

Telephone inquiries concerning this decision should be directed to Andrea Smith at (571) 272-3226.

Andrea Smith
Petitions Examiner
Office of Petitions

cc: Larry Lomis
New Horizons Diagnostics Corporation
9110 Red Branch Road
Columbia, MD 21045

UNITED STATES PATENT AND TRADEMARK OFFICE

Commissioner for Patents
United States Patent and Trademark Office
P.O. Box 1450
Alexandria, VA 22313-1450
www.uspto.gov

COLIN G. SANDERCOCK, ESQUIRE
HELLER EHRMAN WHITE & MCAULIFFE LLP
1717 RHODE ISLAND AVENUE, N.W.
WASHINGTON DC 20036

COPY MAILED

MAY 10 2007

OFFICE OF PETITIONS

In re Application of :
LOOMIS, Lawrence et al. :
Application No. 10/855,978 : DECISION ON PETITION
Filed: May 28, 2004 : TO WITHDRAW
Attorney Docket No. **38228-0123** : FROM RECORD

This is a decision on the Request to Withdraw as attorney or agent of record under 37 C.F.R. § 1.36(b), filed December 01, 2006.

The request is **NOT APPROVED**.

A grantable request to withdraw as attorney/agent of record must be signed by every attorney/agent seeking to withdraw or contain a clear indication that one attorney is signing on behalf of another/others. A request to withdraw will not be approved unless at least 30 (thirty) days would remain between the date of approval and the later of the expiration date of a time to file a response or the expiration date of the maximum time period which can be extended under 37 C.F.R. § 1.136(a).

The Office cannot approve the request at this time since the reasons provided do not meet any of the conditions under the mandatory or permissive categories enumerated in 37 CFR 10.40. Section 10.40 of Title 37 of the Code of Federal Regulation states, "[a] practitioner shall not withdraw from employment in a proceeding before the Office without permission from the Office[.]" More specifically, 37 CFR 10.40 states, "[i]f paragraph (b) of this section is not applicable, a practitioner may not request permission to withdraw in matter pending before the Office unless such request or such withdrawal is" for one the permissive reasons listed in 37 CFR 10.40(c). The reasons set forth in the request, client/assignee requested transfer, does not meet any of the conditions set forth in 37 CFR 10.40.

In order to request or take action in a patent matter, the assignee must establish its ownership of the patent to the satisfaction of the Director. In this regard, a Statement under 37 CFR 3.73(b) must have either: (i) documentary evidence of a chain of title from the original owner to the assignee (*e.g.*, copy of an executed assignment), and a statement affirming that the documentary evidence of the chain of title from the original owner to the assignee was or concurrently is being

submitted for recordation pursuant to § 3.11; or (ii) a statement specifying where documentary evidence of a chain of title from the original owner to the assignee is recorded in the assignment records of the Office (*e.g.*, reel and frame number).

All future communications from the Office will continue to be directed to the above-listed address until otherwise notified by applicant.

Telephone inquiries concerning this decision should be directed to Tredelle Jackson at 571-272-2783.

Monica A. Graves
Petitions Examiner
Office of Petitions

cc: **LARRY LOOMIS**
NEW HORIZONS DIAGNOSTICS CORPORATION
9110 RED BRANCH ROAD
COLUMBIA, MD 21045

UNITED STATES PATENT AND TRADEMARK OFFICE

Commissioner for Patents
United States Patent and Trademark Office
P.O. Box 1450
Alexandria, VA 22313-1450
www.uspto.gov

GRANT PATENT SERVICE
2107 HOUNDS RUN PLACE
SILVER SPRING MD 20906

COPY MAILED

OCT 1 2 2007

OFFICE OF PETITIONS

In re Application of :
Loomis, et al. :
Application No. 10/855,978 : ON PETITION
Filed: May 28, 2004 :
Attorney Docket No. N/A :
For: USE OF BACTERIAL PHAGE ASSOCIATED LYSING ENZYMES FOR TREATING VARIOUS ILLNESSES

This is a decision on the petition, filed May 31, 2007, under 37 CFR 1.137(b) to revive the above-identified application.

The petition is **dismissed** and the merits of the petition will not be addressed because the petition is not signed by a proper party. No additional petition fee will be due when petitioners file a reconsideration petition. Petitioners should file a reconsideration petition within two (2) months of the mailing of this decision.

37 CFR 1.33(b) states that any amendments and other papers filed in an application must be signed by (1) an appointed registered attorney or agent; (2) a registered attorney or agent not appointed, but acting in a representative capacity, (3) an assignee under 3.71(b); or (4) all of the named inventors.

The petition is signed by Lawrence Loomis. Lawrence Loomis has not provided an attorney registration number and a review of Office records does not reveal that a person named Lawrence Loomis has been assigned a registration number. Lawrence Loomis has not shown that he is an authorized representative of an assignee who has right to take action.

In short, Lawrence Loomis has not established that he is permitted to file amendments and other papers in this application <u>on his own</u>. It is noted that he is one of two joint inventors.

In any reconsideration petition, applicants are encouraged to file a reconsideration petition selecting **one** of the following courses of action: Either (a) submit Lawrence Loomis's registration number; (b) submit an appropriate 3.73(b) statement on behalf of the assignee (if there is one) establishing ownership of the invention signed by a person authorized to act on behalf of the assignee (the person authorized to act on behalf of the assignee should be Lawrence

Loomis and in this manner, the signature on instant petition will be ratified); or (c) submit another copy of the petition signed by both inventors OR by a registered practitioner.

It is noted on the election that Jonathan E. Grant has not provided a registration number.

A courtesy copy of this decision will be mailed to the address listed on the petition.

Pursuant to 37 CFR 1.136, an extension of time must be filed prior to the expiration of the maximum period obtainable for reply to avoid abandonment. Accordingly, since the $1,080.00 extension of time submitted with the petition on May 31, 2007 was submitted subsequent to the maximum period obtainable for reply, this fee is unnecessary and will be refunded to the credit card used to make the payment.

Further correspondence with respect to this matter should be addressed as follows:

By mail: Mail Stop PETITION
Commissioner for Patents
Post Office Box 1450
Alexandria, VA 22313-1450

By hand: U.S. Patent and Trademark Office
Customer Service Window, Mail Stop Petition
Randolph Building
401 Dulany Street
Alexandria, VA 22314

By FAX: (571) 273-8300 – ATTN: Office of Petitions

Telephone inquiries concerning this decision should be directed to the undersigned at (571) 272-3230.

Shirene Willis Brantley

Shirene Willis Brantley
Senior Petitions Attorney
Office of Petitions

CC: LAWRENCE LOOMIS
9110 RED BRANCH ROAD
COLUMBIA, MD 21045

UNITED STATES PATENT AND TRADEMARK OFFICE

Commissioner for Patents
United States Patent and Trademark Office
P.O. Box 1450
Alexandria, VA 22313-1450
www.uspto.gov

GRANT PATENT SERVICE
2107 HOUNDS RUN PLACE
SILVER SPRING MD 20906

COPY MAILED

JAN 29 2008

OFFICE OF PETITIONS

In re Application of
Loomis, et al.
Application No. 10/855,978
Filed: May 28, 2004
Attorney Docket No. N/A
For: USE OF BACTERIAL PHAGE ASSOCIATED LYSING ENZYMES FOR TREATING VARIOUS ILLNESSES

ON PETITION

This is a decision on the petition under 37 CFR 1.137(b), filed November 15, 2007, to revive the above-identified application.

The petition under 37 CFR 1.137(b) is **GRANTED**.

This application became abandoned for failure to timely reply to the Restriction Requirement, mailed September 25, 2006, which set a one month/30 day period, whichever was longer, for reply. No proper extensions of time having been obtained pursuant to 37 CFR 1.136(a) and no reply being received in the Office, this application became abandoned on October 26, 2006. A Notice of Abandonment was mailed on May 18, 2007.

Applicants have submitted a proper reply to the Restriction Requirement in the form of an election, an acceptable statement of the unintentional nature of the delay in responding to the Restriction Requirement, and the petition fee.

Regarding the statement of delay: It is not apparent whether the person signing the statement of unintentional delay was in a position to have firsthand or direct knowledge of the facts and circumstances of the delay at issue. Nevertheless, such statement is being treated as having been made as the result of a reasonable inquiry into the facts and circumstances of such delay. See 37 CFR 10.18(b) and Changes to Patent Practice and Procedure; Final Rule Notice, 62 Fed. Reg. 53131, 53178 (October 10, 1997), 1203 Off. Gaz. Pat. Office 63, 103 (October 21, 1997). In the event that such an inquiry has not been made, petitioner must make such an inquiry. If such inquiry results in the discovery that it is not correct that the entire delay in filing the required reply from the due date for the reply until the filing of a grantable petition pursuant to 37 CFR 1.137(b) was unintentional, petitioner must notify the Office.

Accordingly, the petition under 37 CFR 1.137(b) is granted.

After the mailing of this decision, the file will be returned to Technology Center AU 1657 for consideration of the election filed on November 15, 2007.

Telephone inquiries concerning this matter may be directed to the undersigned at (571) 272-3230.

Shirene Willis Brantley

Shirene Willis Brantley
Senior Petitions Attorney
Office of Petitions

SPE RESPONSE FOR CERTIFICATE OF CORRECTION

Paper No.: ——

DATE : 3/20/07

TO SPE OF : ART UNIT 1755

SUBJECT : Request for Certificate of Correction for Appl. No.: 10/855988 Patent No.: 7008612 B2

Please respond to this request for a certificate of correction within 7 days.

Please review the requested changes/corrections as shown in the **COCIN** document(s) in the IFW application image. No new matter should be introduced, nor should the scope or meaning of the claims be changed.

Please complete the response (see below) and forward the completed response to scanning using document code **COCX**.

Virginia Tolbert
Certificates of Correction Branch

703-308-9390 ext. 113

Thank You For Your Assistance

The request for issuing the above-identified correction(s) is hereby:
Note your decision on the appropriate box.

- ☑ **Approved** — **All** changes apply.
- ☐ **Approved in Part** — Specify below which changes **do not** apply.
- ☐ **Denied** — State the reasons for denial below.

Comments: _____

J. A. LORENGO
SUPERVISORY PATENT EXAMINER
SPE

1755
Art Unit

UNITED STATES PATENT AND TRADEMARK OFFICE

Commissioner for Patents
United States Patent and Trademark Office
P.O. Box 1450
Alexandria, VA 22313-1450
www.uspto.gov

MAILED
FROM DIRECTOR'S OFFICE

MAR 1 2 2007

TECHNOLOGY CENTER 3600

In re Patent No. LIPSCOMB ET AL.
Issue Date: February 6, 2007
Appl. No.: 10/856,041
Filed: May 30, 2004
For: CAT SCRATCHING POST

DECISION DISMISSING PETITION
37 CFR 1.324

This is a decision on the petition under 37 CFR 1.48, filed January 30, 2007. In view of the fact that the patent has already issued, the request under 37 CFR 1.48 has been treated as a petition to correct inventorship under 37 CFR 1.324.

The petition is dismissed.

A petition to correct inventorship as provided by 37 CFR 1.324 requires (1) a statement from each person who is being added as an inventor that the inventorship error occurred without any deceptive intention on their part, (2) a statement from the current named inventors (including any "inventor" being deleted) who have not submitted a statement as per "(1)" either agreeing to the change of inventorship or stating that they have no disagreement in regard to the requested change, (3) a statement from all assignees of the parties submitting a statement under "(1)" and "(2)" agreeing to the change of inventorship in the patent; such statement must comply with the requirements of 37 CFR 3.73(b); and (4) the fee set forth in 37 CFR 1.20(b).

This petition lacks the statement from the current named inventors. Furthermore, the statement from the assignee does not comply with the requirements of 37 CFR § 3.73(b) as assignee has not established the rights of assignee to take action.

Teri P. Luu
Supervisory Patent Examiner
Art Unit 3644

BOYLE FREDRICKSON NEWHOLM STEIN & GRATZ, S.C.
250 E. WISCONSIN AVENUE
SUITE 1030
MILWAUKEE, WI 53202

UNITED STATES DEPARTMENT OF COMMERCE
Patent and Trademark Office
ASSISTANT SECRETARY OF COMMERCE AND
COMMISSIONER OF PATENTS AND TRADEMARKS
Washington, DC 20231

9/4/08

Patent No. :7171922
Inventor(s) : John M. LIPSCOMB et al.
Issued : 2/6/2007
Title : CAT SCRATCHING
Atty.doc./File No.

Request for Certificates of Correction

Consideration has been given to your request for the issuance of a Certificate of Correction, for the above – identified patent under the provisions of CFR 1.322.

Inspection of the application for the patent reveals that item [75] is printed in accordance with the record and the claims. Therefore being no fault on the Patent and Trademark Office, It has no authority to issue a certificate of correction under the provision of 1.322.

In view of the forgoing, your request in this matter, is hereby denied.

Future written correspondence concerning this matter should be filed and directed to Decisions & Certificates of Correction Branch.

Henry Randall
Cecelia Newman
Decisions & Certificates
of Correction Branch
(703) 308-9390 Ext. 108

BOYLE FREDRICKSON, S.C.
840 NORTH PLANKINTON AVENUE
MILWAUKEE, WI 53203

HR/CBN

UNITED STATES PATENT AND TRADEMARK OFFICE

Commissioner for Patents
United States Patent and Trademark Office
P.O. Box 1450
Alexandria, VA 22313-1450
www.uspto.gov

April 11, 2007

Eric S. Hyman
BLAKELY, SOKOLOFF, TAYLOR & ZAFMAN LLP
12400 Wilshire Blvd. 7th Floor
Los Angeles, CA 90025-1030

Patent No.: 7084414 B2
Application No.: 10/856050
Inventor(s): Wieland, et al.
Issued: August 1, 2006
Title: **CHARGED PARTICLE BEAMLET EXPOSURE SYSTEM**

Re: Request for Certificate of Correction

Consideration has been given your request for the issuance of a certificate of correction for the above-identified patent under the provisions of Rule(s) 1.322 and/or 1.323.

Assignees' names and addresses (assignment data) printed in a patent, are based *solely* on information supplied in the appropriate space for identifying the assignment data, i.e., item 3 of the Issue Fee Transmittal Form PTOL-85B. Granting of a request under 37 CFR 3.81(b) is required to correct applicant's error providing ***incorrect or erroneous*** assignment data, *before* issuance of a Certificate of Correction, under 37 CFR 1.323 *(see Manual of Patent Examining Procedures (M.P.E.P) Chp.1400, sect. 1481).* This procedure is required *at any time after the issue fee is paid*, including after issuance of the patent.

In view of the foregoing, your request, in this mater, is hereby denied.

A request to correct the Assignee under 37 CFR 3.81(b) should include:

A. **the processing fee set forth in 37 CFR 1.117(h) (currently $130);**
B. a statement that the failure to include the correct assignee name on the PTOL-85B was inadvertent; and
C. a copy of the Notice of Recordation of Assignment Document, reflecting the reel and frame number where the assignment(s) is recorded and/or reflecting proof of *the date* the assignment was submitted for recordation.

In the Request, Applicant(s) may request that the file be forwarded to Certificates of Correction Branch, for issuance of a Certificate of Correction, if the Request is granted.

Any request under 37 CFR 3.81(b) should be directed to the following address or facsimile number:

By mail:	Mail Stop PETITIONS Commissioner for Patents Post Office Box 1450 Alexandria, VA 22313-1450
By hand:	Customer Service Window Mail Stop Petitions Randolph Building 401 Dulany Street Alexandria, VA 22314
By fax:	(571) 273-0025 ATTN: Office of Petitions

Virginia Tolbert
For Cecelia Newman
Decisions & Certificate of Correction Branch
(703) 305-8309 or (703) **308-9390 ext 113**

vt

UNITED STATES PATENT AND TRADEMARK OFFICE

Commissioner for Patents
United States Patent and Trademark Office
P.O. Box 1450
Alexandria, VA 22313-1450
www.uspto.gov

James D. Stevens
Reising, Ethington, Barnes, Kisselle, P.C.
P.O. Box 4390
Troy, MI 48099

COPY MAILED

SEP 07 2006

OFFICE OF PETITIONS

In re Application of	:	
Roger A. Murrell	:	
Application No. 10/856,061	:	DECISION ON PETITION
Filed: May 28, 2004	:	TO WITHDRAW
Attorney Docket No. ARM P-3003-3	:	FROM RECORD
	:	

This is a decision on the Request to Withdraw as attorney or agent of record under 37 C.F.R. § 1.36(b), filed February 21, 2006.

The request is **APPROVED**.

A grantable request to withdraw as attorney/agent of record must be signed by every attorney/agent seeking to withdraw or contain a clear indication that one attorney is signing on behalf of another/others. A request to withdraw will not be approved unless at least 30 (thirty) days would remain between the date of approval and the later of the expiration date of a time to file a response or the expiration date of the maximum time period which can be extended under 37 C.F.R. § 1.136(a).

The request was signed by James D. Steven on behalf of all attorneys of record who are associated with Customer No. 23399.

All attorneys/agents associated with the Customer No. 23399 have been withdrawn.

Applicant is reminded that there is no attorney of record at this time.

All future correspondence will be directed to the first named inventor Roger A. Murrell at the address indicated below.

There is an outstanding Office action mailed July 18, 2006 that requires a reply from the applicant.

Telephone inquiries concerning this decision should be directed to Terri Williams at 571-272-2991.

David Bucci
Petitions Examiner
Office of Petitions

cc: Roger A. Murrell
Arm Tooling, Inc.
P.O. Box 180148
Sterling, MI 38314

UNITED STATES PATENT AND TRADEMARK OFFICE

UNITED STATES DEPARTMENT OF COMMERCE
United States Patent and Trademark Office
Address: COMMISSIONER FOR PATENTS
P.O. Box 1450
Alexandria, Virginia 22313-1450
www.uspto.gov

APPLICATION NUMBER	FILING OR 371 (c) DATE	FIRST NAMED APPLICANT	ATTY. DOCKET NO./TITLE
10/856,061	05/28/2004	Roger A. Murrell	ARM P-3003-3

CONFIRMATION NO. 1927

OC000000020195595

OC000000020195595

29318
JAMES D. STEVENS
REISING, ETHINGTON, BARNES, KISSELLE, P.C.
P.O. BOX 4390
TROY, MI 48099

Date Mailed: 08/25/2006

NOTICE REGARDING CHANGE OF POWER OF ATTORNEY

This is in response to the Power of Attorney filed 02/21/2006.

- The withdrawal as attorney in this application has been accepted. Future correspondence will be mailed to the new address of record. 37 CFR 1.33.

T. Williams

TERRI S WILLIAMS
OP (571) 272-2991

FORMER ATTORNEY/AGENT COPY

UNITED STATES PATENT AND TRADEMARK OFFICE

Commissioner for Patents
United States Patent and Trademark Office
P.O. Box 1450
Alexandria, VA 22313-1450
www.uspto.gov

GATES & COOPER LLP
HOWARD HUGHES CENTER
6701 CENTER DRIVE WEST, SUITE 1050
LOS ANGELES CA 90045

COPY MAILED

JUN 0 2 2008

OFFICE OF PETITIONS

In re Application of	:	
Vahid et al.	:	
Application No. 10/856062	:	
Filing or 371(c) Date: 05/28/2004	:	ON PETITION
Pat. Num.: 7356672	:	
Issue Date: 04/08/2008	:	
Attorney Docket Number:	:	
G&C 30448.123-US-01	:	

This is a notice regarding request for acceptance of a fee deficiency submission under 37 CFR 1.28. On September 1, 1998, the Court of Appeals for the Federal Circuit held that 37 CFR 1.28(c) is the sole provision governing the time for correction of the erroneous payment of the issue fee as a small entity. **See DH Technology v. Synergystex International, Inc. 154 F.3d 1333, 47 USPQ2d 1865 (Fed. Cir. Sept. 1, 1998).**

The Office no longer investigates or rejects original or reissue applications under 37 CFR 1.56. **1098 Off. Gaz. Pat. Office 502 (January 3, 1989)**. Therefore, nothing in this Notice is intended to imply that an investigation was done.

Your fee deficiency submission under 37 CFR 1.28 is hereby **ACCEPTED**.

This application is no longer entitled to small entity status. Accordingly, all future fees paid in this patent must be paid at the large entity rate.

Telephone inquiries concerning this matter should be directed to the undersigned at (571) 272-3232.

Derek L. Woods
Attorney
Office of Petitions

UNITED STATES PATENT AND TRADEMARK OFFICE

UNITED STATES DEPARTMENT OF COMMERCE
United States Patent and Trademark Office
Address: COMMISSIONER FOR PATENTS
P.O. Box 1450
Alexandria, Virginia 22313-1450
www.uspto.gov

SAP/BSTZ
BLAKELY SOKOLOFF TAYLOR & ZAFMAN LLP
1279 OAKMEAD PARKWAY
SUNNYVALE, CA 94085-4040

Mail Date: 04/21/2010

Applicant	: Timm Falter	: DECISION ON REQUEST FOR
Patent Number	: 7620934	: RECALCULATION of PATENT
Issue Date	: 11/17/2009	: TERM ADJUSTMENT IN VIEW
Appliction No	: 10/856,073	: OF WYETH AND NOTICE OF INTENT TO
Filed	: 05/28/2004	: ISSUE CERTIFICATE OF CORRECTION
		:

The Request for Recalculation is **GRANTED** to the extent indicated.

The patent term adjustment has been determined to be **485** days. The USPTO will *sua sponte* issue a certificate of correction reflecting the amount of PTA days determined by the recalculation.

Prior to the issuance of the certificate of correction, the USPTO will afford patentee an opportunity to be heard and request reconsideration. Accordingly, patentee has **one month or thirty (30) days**, whichever is longer, to file a request for reconsideration of this patent term adjustment calculation. See 35 U.S.C. 154(b)(3)(B)(ii) and 37 CFR 1.322(a)(4). No extensions of time will be granted under 37 CFR 1.136.

Patentee should use document code PET.OP if electronically filing a request for reconsideration of this patent term adjustment calculation. The patentee must also include the information required by 37 CFR 1.705(b)(2) and the fee required by 37 CFR 1.18(e). If patentee does not file a timely request for reconsideration of this patent term adjustment calculation including the information required by 37 CFR 1.705(b)(2) and the fee required by 37 CFR 1.18(e), the USPTO will issue a certificate of correction reflecting the PTA determination noted above.

Patentee should be aware that in order to preserve the right to review in the United States District Court for the District of Columbia of the USPTO patent term adjustment determination, patentee must ensure that he or she also take the steps required under 35 U.S.C. 154(b)(4)(A) in a timely manner. Nothing in the request for recalculation should be construed as providing an alternative time frame for commencing a civil action under 35 U.S.C. 154(b)(4)(A).

Any questions concerning this decision should be directed to the Office of Patent Legal Administration at 571-272-7702.

UNITED STATES PATENT AND TRADEMARK OFFICE

Commissioner for Patents
United States Patent and Trademark Office
P.O. Box 1450
Alexandria, VA 22313-1450
www.uspto.gov

COPY MAILED

FEB 19 2008

RICHARD P. BERG, ESQ.
C/O LADAS & PARRY
SUITE 2100
5670 WILSHIRE BOULEVARD
LOS ANGELES CA 90036-5679

In re Application of	:	
Choudhury, et al.	:	
Application No. 10/856,106	:	DECISION
Filed: 28 May, 2004	:	
Attorney Docket No. B-5349 621641-3	:	

This is a decision on the petition filed on 11 April, 2007, to revive an application under 37 C.F.R. §1.137(b) as having been abandoned due to unintentional delay.

The Office regrets the delay in addressing the instant matter, however, the petition was presented to the attorneys in the Office of Petitions only at this writing.

The petition as considered under 37 C.F.R. §1.137(b) is **GRANTED**.

BACKGROUND

The record reflects that:

- Petitioner failed to reply timely and properly to the Notice of Allowance/Allowability and Fees Due (as to drawings requirement) mailed on 1 December, 2006, with reply due under a non-extendable deadline on or before 1 March, 2007;
- the application went abandoned by operation of law after midnight 1 March, 2007;
- the Office mailed the Notice of Abandonment 27 March, 2007;

- on 11 April, 2007, Petitioner submitted the instant petition with fee, the reply in the form of drawings requirement due, and made the statement of unintentional delay—Petitioenr Robert Popa (Reg. No. 43,010) is and has been of record herein, and is presumed for the purposes of this petition to be in a position to make the statement of unintentional delay, and if this presumption is incorrect, Petitioner must (under his duty of candor) so notify the Office.

The availability of applications and application papers online to applicants/practitioners who diligently associate their Customer Number with the respective application(s) now provides an applicant/practitioner on-demand information as to events/transactions in an application.

Out of an abundance of caution, Petitioners always should note that those registered to practice *and* all others who make representations before the Office are reminded to inquire into the underlying facts of representations made to the Office and support averments with the appropriate documentation–since all owe to the Office the continuing duty to disclose.[1]

STATUTES, REGULATIONS AND ANALYSIS

Congress has authorized the Commissioner to "revive an application if the delay is shown to the satisfaction of the Commissioner to have been "unavoidable." 35 U.S.C. §133 (1994).[2]

The regulations at 37 C.F.R. §1.137(a) and (b) set forth the requirements for a petitioner to revive a previously unavoidably or unintentionally, respectively, abandoned application under this congressional grant of authority. The language of 35 U.S.C. §133 and 37 C.F.R. §1.137(a) is clear, unambiguous, and without qualification: the delay in tendering the reply to the outstanding Office action, as well as filing the first petition seeking revival, must have been unavoidable for the reply now to be accepted on petition.

Delays in responding properly raise the question whether delays are unavoidable. Where there is a question whether the delay was unavoidable, Petitioners must meet the burden of establishing that the delay was unavoidable within the meaning of 35 U.S.C. §133 and 37 C.F.R. §1.137(a).[3]

And the Petitioner must be diligent in attending to the matter.[4] Failure to do so does not constitute the care required under Pratt, and so cannot satisfy the test for diligence and due care.

---

[1] See supplement of 17 June, 1999. The Patent and Trademark Office is relying on petitioner's duty of candor and good faith and accepting a statement made by Petitioner. See Changes to Patent Practice and Procedure, 62 Fed. Reg. at 53160 and 53178, 1203 Off. Gaz. Pat. Office at 88 and 103 (responses to comments 64 and 109)(applicant obligated under 37 C.F.R. §10.18 to inquire into the underlying facts and circumstances when providing statements to the Patent and Trademark Office).

[2] See: In re Application of G, 11 USPQ2d 1378, 1380 (Comm'r Pats. 1989).

[3] See: *Changes to Patent Practice and Procedure*; *Final Rule Notice*, 62 *Fed. Reg.* at 53158-59 (October 10, 1997), 1203 *Off. Gaz. Pat. Office* at 86-87 (October 21, 1997).

[4] See: Diligence in Filing Petitions to Revive and Petitions to Withdraw the Holding of Abandonment, 1124 Off. Gaz. Pat. Office 33 (March 19, 1991). It was and is Petitioner's burden to exercise diligence in seeking either to have the holding of abandonment withdrawn or the application revived. See 1124 Off. Gaz. Pat. Office supra.

(By contrast, unintentional delays are those that do not satisfy the very strict statutory and regulatory requirements of unavoidable delay, and also, by definition, are not intentional.[5]))

As to Allegations
of Unintentional Delay

The requirements for a grantable petition under 37 C.F.R. §1.137(b) are the petition and fee, a proper reply, a statement/showing of unintentional delay, and—where appropriate—a terminal disclaimer and fee.

Petitioner appears to have satisfied the requirements under the regulation.

CONCLUSION

The instant petition under 37 C.F.R. §1.137(b) is **granted**.

The instant application is released to Publications Branch to be processed into a patent in due course.

Petitioner may find it beneficial to view Private PAIR within a fortnight of the instant decision to ensure that the revival has been acknowledged by the Technology Center/Publications Branch in response to this decision—and it is noted that all inquiries with regard to any failure of that change in status should be directed to the Technology Center/Art Unit/Publications Branch where that change of status must be effected.

While telephone inquiries regarding this decision may be directed to the undersigned at (571) 272-3214, it is noted that all practice before the Office is in writing (see: 37 C.F.R. §1.2[6]) and the proper authority for action on any matter in this regard are the statutes (35 U.S.C.), regulations (37 C.F.R.) and the commentary on policy (MPEP). Therefore, no telephone discussion may be controlling or considered authority for Petitioner's action(s).

John J. Gillon, Jr.
Senior Attorney
Office of Petitions

---

[5] Therefore, by example, an unintentional delay in the reply might occur if the reply and transmittal form are to be prepared for shipment by the US Postal Service, but other pressing matters distract one's attention and the mail is not timely deposited for shipment.

[6] The regulations at 37 C.F.R. §1.2 provide:

§1.2 Business to be transacted in writing.
All business with the Patent and Trademark Office should be transacted in writing. The personal attendance of applicants or their attorneys or agents at the Patent and Trademark Office is unnecessary. The action of the Patent and Trademark Office will be based exclusively on the written record in the Office. No attention will be paid to any alleged oral promise, stipulation, or understanding in relation to which there is disagreement or doubt.

UNITED STATES PATENT AND TRADEMARK OFFICE

Commissioner for Patents
United States Patent and Trademark Office
P.O. Box 1450
Alexandria, VA 22313-1450
www.uspto.gov

KIRKPATRICK & LOCKHART NICHOLSON GRAHAM LLP
STATE STREET FINANCIAL CENTER
ONE LINCOLN STREET
BOSTON, MA 02111-2950

COPY MAILED

MAY 2 2 2006

OFFICE OF PETITIONS

In re Application of	:	
Rosen et al.	:	
Application No. 10/856,108	:	DECISION ON PETITION
Filed: May 28, 2004	:	UNDER 37 CFR 1.78(a)(3)
Attorney Docket No. INL-044DV1	:	

This is a decision on the petition under 37 CFR § 1.78(a)(3), filed February 14, 2006, to accept an unintentionally delayed claim under 35 U.S.C. §120 for the benefit of priority to prior-filed application Nos. 10/331,731 and 10/050,441, set forth in the concurrently filed amendment.

The petition is **GRANTED**.

A petition for acceptance of a claim for late priority under 37 CFR § 1.78(a)(3) is only applicable to those applications filed on or after November 29, 2000. Further, the petition is appropriate only after the expiration of the period specified in 37 CFR §§ 1.78(a)(2)(ii). In addition, the petition under 37 CFR § 1.78(a)(3) must be accompanied by:

(1) the reference required by 35 U.S.C. § 120 and 37 CFR § 1.78(a)(2)(i) of the prior-filed application, unless previously submitted;
(2) the surcharge set forth in § 1.17(t); and
(3) a statement that the entire delay between the date the claim was due under 37 CFR §§ 1.78(a)(2)(ii) and the date the claim was filed was unintentional. The Director may require additional where there is a question whether the delay was unintentional.

A reference to the prior-filed nonprovisional applications has been included in an amendment to the first sentence of the specification following the title, as required by 37 CFR 1.78(a)(2)(iii). However, a Notice of Allowance was mailed in this application on November 15, 2005. To reopen prosecution for consideration of this amendment, petitioner has submitted a Request for Continued Examination (RCE) and fee. (It is noted that the RCE and submission serve as a timely and complete response to the Notice of Allowance).

All of the above requirements having been satisfied, the late claim for benefit of priority to the prior-filed applications under 35 U.S.C. § 120 is accepted as being unintentionally delayed.

The granting of the petition to accept the delayed benefit claim to the prior-filed applications under 37 CFR §§ 1.78(a)(3) should not be construed as meaning that this application is entitled to the benefit of the filing date of the prior-filed applications. In order for this application to be entitled to the benefit of the prior-filed applications, all other requirements under 35 U.S.C. §§120 and 1.78(a)(1) and (a)(2) must be met. Similarly, the fact that the corrected Filing Receipt accompanying this decision on petition includes the prior-filed applications should not be construed as meaning that applicant is entitled to the claim for benefit of priority to the prior-filed applications noted thereon. Accordingly, the examiner will, in due course, consider this benefit claim and determine whether the application is entitled to the benefit of the earlier filing date.

A corrected Filing Receipt, which includes the priority claim to the prior-filed applications, accompanies this decision on petition.

Any questions concerning this matter may be directed to Nancy Johnson, Senior Petitions Attorney, at (571) 272-3219. All other inquiries concerning either the examination procedures or status of the application should be directed to the Technology Center.

This application is being referred to Technology Center Art Unit 1655 for consideration by the examiner of the claim for benefit of priority under 35 U.S.C. § 120 to the prior-filed nonprovisional applications.

Frances Hicks for
Charles Pearson
Director
Office of Petitions

ATTACHMENT : Corrected Filing Receipt

The granting of the petition to accept the delayed benefit claim to the prior-filed application under 37 CFR 1.78(a)(6) should not be construed as meaning that this application is entitled to the benefit of the filing date of the prior-filed application. In order for this application to be entitled to the benefit of the prior-filed application, all other requirements under 35 U.S.C. §119(e) and 37 CFR 1.78(a)(4) and (a)(5) must be met. Similarly, the fact that the corrected Filing Receipt accompanying this decision on petition includes the prior-filed application should not be construed as meaning that applicant is entitled to the claim for benefit of priority to the prior-filed application noted thereon. Accordingly, the examiner will, in due course, consider this benefit claim and determine whether the application is entitled to the benefit of the earlier filing date.

A corrected Filing Receipt, which includes the priority claim to the prior-filed provisional application, accompanies this decision on petition.

Any inquiries concerning this decision may be directed to the undersigned at (571) 272-3218. All other inquiries concerning either the examination procedures or status of the application should be directed to the Technology Center.

The application is being forwarded to Technology Center AU 2131 for examination in due course and for consideration by the examiner of the claim under 35 U.S.C. §119(e) for the benefit of priority to the prior-filed provisional application.

Frances Hicks
Frances Hicks
Petitions Examiner
Office of Petitions

ATTACHMENT: Corrected Filing Receipt

UNITED STATES PATENT AND TRADEMARK OFFICE

UNITED STATES DEPARTMENT OF COMMERCE
United States Patent and Trademark Office
Address: COMMISSIONER FOR PATENTS
P.O. Box 1450
Alexandria, Virginia 22313-1450
www.uspto.gov

HAMILTON, BROOK, SMITH & REYNOLDS, P.C.
530 VIRGINIA ROAD
P.O. BOX 9133
CONCORD, MA 01742-9133

Mail Date: 04/21/2010

Applicant	: Norbert Leser	: DECISION ON REQUEST FOR
Patent Number	: 7587749	: RECALCULATION of PATENT
Issue Date	: 09/08/2009	: TERM ADJUSTMENT IN VIEW
Appliction No	: 10/856,112	: OF WYETH AND NOTICE OF INTENT TO
Filed	: 05/28/2004	: ISSUE CERTIFICATE OF CORRECTION
		:

The Request for Recalculation is **GRANTED** to the extent indicated.

The patent term adjustment has been determined to be **1026** days. The USPTO will *sua sponte* issue a certificate of correction reflecting the amount of PTA days determined by the recalculation.

Prior to the issuance of the certificate of correction, the USPTO will afford patentee an opportunity to be heard and request reconsideration. Accordingly, patentee has **one month or thirty (30) days**, whichever is longer, to file a request for reconsideration of this patent term adjustment calculation. See 35 U.S.C. 154(b)(3)(B)(ii) and 37 CFR 1.322(a)(4). No extensions of time will be granted under 37 CFR 1.136.

Patentee should use document code PET.OP if electronically filing a request for reconsideration of this patent term adjustment calculation. The patentee must also include the information required by 37 CFR 1.705(b)(2) and the fee required by 37 CFR 1.18(e). If patentee does not file a timely request for reconsideration of this patent term adjustment calculation including the information required by 37 CFR 1.705(b)(2) and the fee required by 37 CFR 1.18(e), the USPTO will issue a certificate of correction reflecting the PTA determination noted above.

Patentee should be aware that in order to preserve the right to review in the United States District Court for the District of Columbia of the USPTO patent term adjustment determination, patentee must ensure that he or she also take the steps required under 35 U.S.C. 154(b)(4)(A) in a timely manner. Nothing in the request for recalculation should be construed as providing an alternative time frame for commencing a civil action under 35 U.S.C. 154(b)(4)(A).

Any questions concerning this decision should be directed to the Office of Patent Legal Administration at 571-272-7702.

United States
Patent And
Trademark Office

P.O. Box 1450, Alexandria, Virginia 22313-1450 – www.uspto.gov

PETITION DECISION

08/18/04

Eric L. Prahl
Wilmer Cutler Pickering Hale and Dorr LLP
60 State Street
Boston, MA 02109

Dear Applicant:

The Box PG Pub replacement drawings for application number 10/856120 received on 07/26/04 by the U. S. Patent and Trademark Office will be included for patent publication.

Telephone inquiries should be directed to Kaletus King, Office of Pre-Grant Publication 703 605-4283.

Kaletus King

Signature of Reviewer, Office of Pre-Grant Publication

UNITED STATES PATENT AND TRADEMARK OFFICE

COMMISSIONER FOR PATENTS
UNITED STATES PATENT AND TRADEMARK OFFICE
P.O. BOX 1450
ALEXANDRIA, VA 22313-1450
www.uspto.gov

Kirkpatrick & Lockhart Preston Gates Ellis LLP
(FORMERLY KIRKPATRICK & LOCKHART NICHOLSON GRAHAM)
STATE STREET FINANCIAL CENTER
One Lincoln Street
BOSTON MA 02111-2950

COPY MAILED

SEP 17 2007

OFFICE OF PETITIONS

In re Application of	:	
Leblanc, et al.	:	
Application No. 10/856,121	:	DECISION ON PETITION
Filed: May 28, 2004	:	
Docket No.: BKP-015	:	

This is a decision on the petition under 37 CFR 1.181, filed August 6, 2007, to withdraw the holding of abandonment.

The petition is **GRANTED**.

The application was held abandoned for failure to timely submit a properly reply to the Office action mailed September 21, 2006. The non-final Office action set a one month shortened statutory period of time for reply. Notice of Abandonment was mailed July 30, 2007.

Petitioners assert non-receipt of the Office action.

In the absence of any irregularity in the mailing of an Office communication, there is a strong presumption that the Office communication was properly mailed to practitioner at the correspondence address of record. This presumption may be overcome by a showing that the Office communication was not in fact received. The showing required to establish non-receipt of an Office communication must include a statement from the practitioner stating that the Office communication was not received by the practitioner and attesting to the fact that a search of the file jacket and docket records indicates that the Office communication was not received. A copy of the docket record where the non-received Office communication would have been entered had it been received and docketed must be attached to and referenced in practitioner's statement. *See*, MPEP 711.03(c). The showing outlined above may not be sufficient if there are circumstances that point to a conclusion that the Office communication may have been lost after receipt rather than a conclusion that the Office communication was lost in the mail.

The arguments and supporting documentation presented have been carefully considered and support the conclusion that the non-final Office was not received.

In view thereof the Notice of Abandonment is hereby **VACATED** and the holding of abandonment is **WITHDRAWN**.

The application file is being forwarded to Technology Center 3600 for further processing.

Telephone inquiries concerning this matter may be directed to the undersigned at 571-272-3205.

Alesia M. Brown
Petitions Attorney
Office of Petitions

United States
Patent And
Trademark Office

P.O. Box 1450, Alexandria, Virginia 22313-1450 – www.uspto.gov

PETITION DECISION

08/18/04

Eric L. Prahl
Wilmer Cutler Pickering Hale and Dorr LLP
60 State Street
Boston, MA 02109

Dear Applicant:

The Box PG Pub replacement drawings for application number 10/856127 received on 07/26/04 by the U. S. Patent and Trademark Office will be included for patent publication.

Telephone inquiries should be directed to Kaletus King, Office of Pre-Grant Publication 703 605-4283.

Kaletus King
Signature of Reviewer, Office of Pre-Grant Publication

UNITED STATES PATENT AND TRADEMARK OFFICE

Commissioner for Patents
United States Patent and Trademark Office
P.O. Box 1450
Alexandria, VA 22313-1450
www.uspto.gov

December 1, 2009

Mollybeth Kocialski
Qwest Communications International Inc.
1801 California Street. #900
Denver, CO 80202

Patent No: 7,596,216 B2
Application No: 10/856,129
Applicant: Joseph E. Vance, et al.
Issued: September 29, 2009
Title: **SYSTEM AND METHOD FOR TELECONFERENCE PASS CODE SECURITY AT A TELECOMMUNICATIONS SWITCH**

Request for Certificate of Correction:

Consideration has been given to your request for the issuance of a certificate of correction for the above- identified patent under the provisions of Rule 1.322.

Inspection of the application reveals that figure 2, column 5 line 7 and Column 6 line 30, are printed in accordance with the record in the Patent and Trademark Office, as passed to issue by the examiner. There being no fault on the part of the Patent and Trademark Office, it has no authority to issue a certificate of correction under the provision of 1.322.

In view of the foregoing your request in these matters are hereby **denied**.

However, further consideration will be given to this matter, upon receipt of a request for certificate of correction under the provision of 1.323, accompanied by the appropriate fee which is presently $100.

/Virginia Tolbert/
Virginia Tolbert
For Mary Diggs, Supervisor
Decisions and Certificate of Correction
(571) 272-0460 (voice)
(571) 270-9892 (fax)

vt

UNITED STATES PATENT AND TRADEMARK OFFICE

UNITED STATES DEPARTMENT OF COMMERCE
United States Patent and Trademark Office
Address: COMMISSIONER FOR PATENTS
P.O. Box 1450
Alexandria, Virginia 22313-1450
www.uspto.gov

SAP AG
3410 HILLVIEW AVENUE
PALO ALTO, CA 94304

Mail Date: 04/20/2010

Applicant	: Dimitar P. Kostadinov	: DECISION ON REQUEST FOR
Patent Number	: 7653828	: RECALCULATION of PATENT
Issue Date	: 01/26/2010	: TERM ADJUSTMENT IN VIEW
Appliction No	: 10/856,135	: OF WYETH AND NOTICE OF INTENT TO
Filed	: 05/28/2004	: ISSUE CERTIFICATE OF CORRECTION
		:

The Request for Recalculation is **GRANTED** to the extent indicated.

The patent term adjustment has been determined to be **1160** days. The USPTO will *sua sponte* issue a certificate of correction reflecting the amount of PTA days determined by the recalculation.

Prior to the issuance of the certificate of correction, the USPTO will afford patentee an opportunity to be heard and request reconsideration. Accordingly, patentee has **one month or thirty (30) days**, whichever is longer, to file a request for reconsideration of this patent term adjustment calculation. See 35 U.S.C. 154(b)(3)(B)(ii) and 37 CFR 1.322(a)(4). No extensions of time will be granted under 37 CFR 1.136.

Patentee should use document code PET.OP if electronically filing a request for reconsideration of this patent term adjustment calculation. The patentee must also include the information required by 37 CFR 1.705(b)(2) and the fee required by 37 CFR 1.18(e). If patentee does not file a timely request for reconsideration of this patent term adjustment calculation including the information required by 37 CFR 1.705(b)(2) and the fee required by 37 CFR 1.18(e), the USPTO will issue a certificate of correction reflecting the PTA determination noted above.

Patentee should be aware that in order to preserve the right to review in the United States District Court for the District of Columbia of the USPTO patent term adjustment determination, patentee must ensure that he or she also take the steps required under 35 U.S.C. 154(b)(4)(A) in a timely manner. Nothing in the request for recalculation should be construed as providing an alternative time frame for commencing a civil action under 35 U.S.C. 154(b)(4)(A).

Any questions concerning this decision should be directed to the Office of Patent Legal Administration at 571-272-7702.

UNITED STATES PATENT AND TRADEMARK OFFICE

UNITED STATES DEPARTMENT OF COMMERCE
United States Patent and Trademark Office
Address: COMMISSIONER FOR PATENTS
P.O. Box 1450
Alexandria, Virginia 22313-1450
www.uspto.gov

SAP AG
3410 HILLVIEW AVENUE
PALO ALTO, CA 94304

Mail Date: 05/17/2010

Applicant : Dimitar P. Kostadinov
Patent Number : 7653828
Issue Date : 01/26/2010
Application No : 10/856,135
Filed : 05/28/2004

: NOTICE CONCERNING IMPROPER
: CALCULATION OF PATENT TERM
: ADJUSTMENT BASED UPON USPTO
: IMPROPERLY MEASURING REDUCTION
: PERIOD UNDER 37 CFR 1.704(c)(10).

The United States Patent and Trademark Office (USPTO) discovered that in processing the recent recalculation decisions mailed in response to patentee's filed Request for Recalculation of Patent Term Adjustment in view of Wyeth, the USPTO improperly measured the reduction period for reductions under 37 CFR 1.704(c)(10). Pursuant to 37 CFR 1.704(c)(10), patentee's reduction begins on the date of filing the amendment under 37 CFR 1.312 ("1.312 amendment") or other related paper and ends on the date that the Office mails a response to the filing of the 1.312 amendment or other paper. It has been discovered that during the recalculation, the calculation failed to the limit the reduction to the mail date of the response to the 1.312 amendment or other paper. Accordingly, patentee's reductions were greater than warranted.

This notice **VACATES** the previous GRANTED request for recalculation and provides patentee with a revised GRANTED recalculation.

The patent term adjustment has been determined to be **1228** days. The USPTO will *sua sponte* issue a certificate of correction reflecting the amount of patent term adjustment (PTA) days determined by the recalculation.

Prior to the issuance of the certificate of correction, the USPTO will afford patentee an opportunity to be heard and request reconsideration. Accordingly, patentee has **one month or thirty (30) days** from the mail date of this notice, whichever is longer, to file a request for reconsideration of this PTA calculation. See 35 U.S.C. § 154(b)(3)(B)(ii) and 37 CFR 1.322(a)(4).

Patentee should use document code PET.OP if electronically filing a request for reconsideration of this PTA calculation. The patentee must also include the information required by 37 CFR 1.705(b)(2), and the fee required by 37 CFR 1.18(e). If patentee does not file a timely request for reconsideration of this PTA calculation, including the information required by 37 CFR 1.705(b)(2) and the fee required by 37 CFR 1.18(e), the USPTO will issue a certificate of correction reflecting the PTA determination noted above.

Patentee should be aware that in order to preserve the right of review of the USPTO's PTA determination in the United States District Court for the District of Columbia, patentee must ensure that the steps required under 35 U.S.C. § 154 (b)(4) are taken in a timely manner. Nothing in the request for recalculation should be construed as providing an alternative time frame for commencing a civil action under 35 U.S.C. § 154(b)(4).

United States
Patent And
Trademark Office

P.O. Box 1450, Alexandria, Virginia 22313-1450 – www.uspto.gov

PETITION DECISION

07/30/04

Richard E. Gamache
Weingarten, Schurgin, Gagnebin & Lebovici LLP
Ten Post Office Square
Boston, MA 02109

Dear Applicant:

The Box PG Pub replacement drawings for application number 10/856140 received on 07/06/04 by the U. S. Patent and Trademark Office will be included for patent publication.

Telephone inquiries should be directed to Kaletus King, Office of Pre-Grant Publication 703 605-4283.

Kaletus King

Signature of Reviewer, Office of Pre-Grant Publication

BEST AVAILABLE COPY

UNITED STATES PATENT AND TRADEMARK OFFICE

Commissioner for Patents
United States Patent and Trademark Office
P.O. Box 1450
Alexandria, VA 22313-1450
www.uspto.gov

JOHN C. MALLOY
100 EDGEWATER DR.,116
MIAMI FL 33133

COPY MAILED

APR 1 8 2005

OFFICE OF PETITIONS

ON PETITION

In re Application of :
Thomas G. Kent et al :
Application No. 10/856,146 :
Filed: May 27, 2004 :
Attorney Docket No. None :

This is a decision on the petition under 37 CFR 1.137(b), filed December 13, 2004, to revive the above-identified application.

The petition is **DISMISSED**.

Any request for reconsideration of this decision must be submitted within TWO (2) MONTHS from the mail date of this decision. Extensions of time under 37 CFR 1.136(a) are permitted. The reconsideration request should include a cover letter entitled "Renewed Petition under 37 CFR 1.137(b)." This is **not** final agency action within the meaning of 5 U.S.C. § 704.

A grantable petition under 37 CFR 1.137(b)[1] must be accompanied by: (1) the required reply,[2] unless previously filed; (2) the petition fee as set forth in 37 CFR 1.17(m); (3) a statement that the entire delay in filing the required reply from the due date for the reply until the filing of a grantable petition pursuant to 37 CFR 1.137(b) was unintentional; and (4) any terminal disclaimer (and fee as set forth in 37 CFR 1.20(d)) required by 37 CFR 1.137©). Where there is a question as to whether either the abandonment or the delay in filing a petition under 37 CFR 1.137 was unintentional, the Commissioner may require additional information. See MPEP 711.03(c)(III)©) and (D). The instant petition lack(s) item(s) (1).

In the Notice To File Corrected Application Papers mailed July 26, 2004, applicant was informed of an additional fee of $43 for one (1) independent claim fee in excess of three. However, the USPTO fee increase was effective on December 8, 2004. Therefore, a total of $45 ($100-($55 previously paid)), for one (1) independent claim fee in excess of three is required.

---

[1] As amended effective December 1, 1997. See Changes to Patent Practice and Procedure; Final Rule Notice, 62 Fed. Reg. 53131, 53194-95 (October 10, 1997), 1203 Off. Gaz. Pat. Office 63, 119-20 (October 21, 1997).

[2] In a nonprovisional application abandoned for failure to prosecute, the required reply may be met by the filing of a continuing application. In an application or patent, abandoned or lapsed for failure to pay the issue fee or any portion thereof, the required reply must be the payment of the issue fee or any outstanding balance thereof.

Further correspondence with respect to this matter should be addressed as follows:

By mail: Mail Stop PETITIONS
Commissioner for Patents
Post Office Box 1450
Alexandria, VA 22313-1450

By hand: Customer Window located at:

Randolph Building
401 Dulany Street
Alexandria, VA 22314

By fax: (703) 872-9306
ATTN: Office of Petitions

Telephone inquiries concerning this decision should be directed to Karen Creasy at (571) 272-3208.

Karen Creasy

Karen Creasy
Petitions Examiner
Office of Petitions
Office of the Deputy Commissioner
for Patent Examination Policy

UNITED STATES PATENT AND TRADEMARK OFFICE

Commissioner for Patents
United States Patent and Trademark Office
P.O. Box 1450
Alexandria, VA 22313-1450
www.uspto.gov

MALLOY & MALLOY
2800 S.W. THIRD AVENUE
HISTORIC CORAL WAY
MIAMI, FL 33129

COPY MAILED

JUN 28 2005

OFFICE OF PETITIONS

In re Application of	:
Thomas G. Kent et al	:
Application No. 10/856,146	: DECISION GRANTING PETITION
Filed: May 27, 2004	: UNDER 37 CFR 1.137(b)
Attorney Docket No. None	:

This is a decision on the renewed petition under 37 CFR 1.137(b), filed May 23, 2005, to revive the above-identified application.

The petition is **GRANTED**.

The above-identified application became abandoned for failure to reply in a timely manner to the Notice Of Incomplete Reply (Nonprovisional) mailed May 13, 2005.

Telephone inquiries concerning this decision should be directed to the undersigned at (571) 272-3208.

This matter is being referred to the Office of Initial Patent Examination.

Karen Creasy

Karen Creasy
Petitions Examiner
Office of Petitions
Office of the Deputy Commissioner
for Patent Examination Policy

UNITED STATES PATENT AND TRADEMARK OFFICE

Commissioner for Patents
United States Patent and Trademark Office
P.O. Box 1450
Alexandria, VA 22313-1450
www.uspto.gov

OCT 19 2005

MALLOY & MALLOY
2800 S.W. THIRD AVENUE
HISTORIC CORAL WAY
MIAMI FL 33129

In re Application of	:	
Thomas G. Kent, et al	:	DECISION PETITION
Serial No.: 10/856,146	:	
Filed: May 27, 2004	:	
For: Apparatus and Process for Servicing	:	
Underground Electrical Power	:	
Distribution Cables	:	

This is in response to applicants' petition filed July 18, 2005, to make the above-identified application special under the provisions of 37 CFR 1.102(c), based on the age of the applicant.

Applicant has satisfied the provisions set forth in M.P.E.P. 708.02, IV. Therefore the petition is **GRANTED**.

The application will be forwarded to the examiner for action on the merits commensurate with this decision.

Should there be any questions with regard to this letter please contact Frederick Schmidt by letter addressed to the Director, Technology Center 3700, P.O. Box 1450 Alexandria, VA 22313-1450, or by telephone at (571) 272-2975 or by facsimile transmission at (571) 273-8300.

Frederick R. Schmidt, Director
Technology Center 3700

UNITED STATES PATENT AND TRADEMARK OFFICE

UNITED STATES DEPARTMENT OF COMMERCE
United States Patent and Trademark Office
Address: COMMISSIONER FOR PATENTS
P.O. Box 1450
Alexandria, Virginia 22313-1450
www.uspto.gov

JACKSON WALKER, L.L.P.
112 E. PECAN, SUITE 2400
SAN ANTONIO, TX 78205

Mail Date: 04/20/2010

Applicant	: Rachel Sapyta	: DECISION ON REQUEST FOR
Patent Number	: 7600619	: RECALCULATION of PATENT
Issue Date	: 10/13/2009	: TERM ADJUSTMENT IN VIEW
Appliction No	: 10/856,148	: OF WYETH AND NOTICE OF INTENT TO
Filed	: 05/28/2004	: ISSUE CERTIFICATE OF CORRECTION
		:

The Request for Recalculation is **GRANTED** to the extent indicated.

The patent term adjustment has been determined to be **1097** days. The USPTO will *sua sponte* issue a certificate of correction reflecting the amount of PTA days determined by the recalculation.

Prior to the issuance of the certificate of correction, the USPTO will afford patentee an opportunity to be heard and request reconsideration. Accordingly, patentee has **one month or thirty (30) days**, whichever is longer, to file a request for reconsideration of this patent term adjustment calculation. See 35 U.S.C. 154(b)(3)(B)(ii) and 37 CFR 1.322(a)(4). No extensions of time will be granted under 37 CFR 1.136.

Patentee should use document code PET.OP if electronically filing a request for reconsideration of this patent term adjustment calculation. The patentee must also include the information required by 37 CFR 1.705(b)(2) and the fee required by 37 CFR 1.18(e). If patentee does not file a timely request for reconsideration of this patent term adjustment calculation including the information required by 37 CFR 1.705(b)(2) and the fee required by 37 CFR 1.18(e), the USPTO will issue a certificate of correction reflecting the PTA determination noted above.

Patentee should be aware that in order to preserve the right to review in the United States District Court for the District of Columbia of the USPTO patent term adjustment determination, patentee must ensure that he or she also take the steps required under 35 U.S.C. 154(b)(4)(A) in a timely manner. Nothing in the request for recalculation should be construed as providing an alternative time frame for commencing a civil action under 35 U.S.C. 154(b)(4)(A).

Any questions concerning this decision should be directed to the Office of Patent Legal Administration at 571-272-7702.

UNITED STATES PATENT AND TRADEMARK OFFICE

Commissioner for Patents
United States Patent and Trademark Office
P.O. Box 1450
Alexandria, VA 22313-1450
www.uspto.gov

COPY MAILED

FEB 0 2 2005

OFFICE OF PETITIONS

BAKER & BOTTS
30 ROCKEFELLER PLAZA
NEW YORK, NY 10112

In re Application of
James, Klein, and Beach
Application No. 10/856,157
Filed: May 28, 2004
Attorney Docket No. AP35063-072797.0143
For: WIRELESS NETWORK CELL CONTROLLER

: DECISION REFUSING STATUS
: UNDER 37 CFR 1.47(a)

This is a decision on the petition under 37 CFR 1.47(a) November 26, 2004

The petition under 37 CFR 1.47(a) is **dismissed.**

Any request for reconsideration under this decision must be submitted within TWO (2) MONTHS from the mail date of this decision. Extensions of time under 37 CFR 1.136(a) are permitted. Failure to respond will result in the abandonment of this application. Any response should be titled "Request for Reconsideration of Petition Under 37 CFR 1.47(a).

The above-identified application was filed on May 28, 2004, and was not accompanied by a properly executed oath or declaration. On July 26, 2004, a Notice to File Missing Parts of Nonprovisional Application was mailed requiring an executed oath or declaration and payment of the surcharge. The notice allowed an extendable period for reply of two months from its mailing date. The instant petition was filed on November 26, 2004.

A grantable petition under 37 CFR 1.47(a) requires:

(1) proof that the non-signing inventor(s) cannot be reached or refuses to sign the oath or declaration after having been presented with the application papers (specification, claims, and drawings);

(2) an acceptable oath or declaration in compliance with 35 U.S.C. §§ 115 and 116;

(3) the petition fee,

(4) a statement of the last known address of the non-signing inventor,

The instant petition lacks item (1) above.

As to item (1) sufficient proof was not provided that the entire application was sent to the non-signing inventor, not just the declaration and power of attorney. Guidance as to what is required to be sent to the non-signing before a refusal to join the prosecution of the application, constructive or express, can be alleged is found in the *Manual of Patent Examining Procedure*, Section 409.03(d) which reads, in pertinent part:

> [b]efore a refusal can be alleged, it must be demonstrated that a bona fide attempt was made to present a copy of the application papers (specification, including claims, drawings, and oath or declaration) to the non-signing inventor.

It is not apparent from the instant petition whether petitioner sent the non-signing inventor the entire application for his review and signature. Further, the copy of the cover letter for the correspondence petitioner sent to the non-signing inventor makes no mention of the entire application being enclosed. It is, therefore, concluded that item (1) above has not been satisfied. Any renewed petition filed must demonstrate that a copy of the entire application, including the specification, claims, and drawings, were sent to the non-signing inventor.

Further correspondence with respect to this matter should be addressed as follows:

By mail: Mail Stop Petitions
Commissioner for Patents,
PO Box 1450
Alexandria, VA 22313-1450

By FAX: (703) 872-9306
Attn: Office of Petitions

Telephone inquiries should be directed to the undersigned (571) 272-3222.

Kenya A. McLaughlin

Kenya A. McLaughlin
Petitions Attorney
Office of Petitions

UNITED STATES PATENT AND TRADEMARK OFFICE

Commissioner for Patents
United States Patent and Trademark Office
P.O. Box 1450
Alexandria, VA 22313-1450
www.uspto.gov

Baker & Botts
30 Rockefeller Plaza
New York, NY 10112

COPY MAILED

APR 07 2005

OFFICE OF PETITIONS

In re Application of
James, Klein, and Beach
Application No.: 10/856,157
Filed: May 28, 2004
Attorney Docket No: AP35063-072797.0143
For: WIRELESS NETWORK CELL CONTROLLER

: DECISION ACCORDING
: RULE 47(a) STATUS

This is in response to the renewed petition under 37 CFR 1.47(a), filed March 25, 2005.

The renewed petition is **GRANTED**.

The above-identified application and papers have been reviewed and found in compliance with 37 CFR 1.47(a). This application is hereby accorded Rule 1.47(a) status.

The above-cited application was filed on May 28, 2004, and was not accompanied by a proper oath or declaration. A Notice to File Missing Parts of Non-provisional Application was mailed on July 26, 2004, requiring a properly executed declaration and $130.00 surcharge. The notice allowed an extendable period for reply of two months from its mailing date. On November 26, 2004, the instant petition was filed, and was dismissed by a decision mailed February 2, 2005. The instant renewed petition was filed on March 25, 2005.

Petitioner has shown that inventor James is unavailable to join the filing of the above-identified application after having been presented with the application papers. The above-identified application and papers have been reviewed and found in compliance with 37 CFR 1.47(a). This application is hereby accorded Rule 1.47(a) status.

As provided in Rule 1.47(c), this Office will forward notice of this application's filing to the non-signing inventor at the addresses given in the petition. Notice of the filing of this application will also be published in the Official Gazette.

It is noted that the declaration for the above-cited application lists the name of the first joint inventor as "Frank James", however; petitioner refers to the first joint inventor as "James Frank". Petitioner should verify the name of the first joint inventor and correct the application record, if necessary.

This application will be forwarded to the Office of Initial Patent Examination for further processing.

Telephone inquiries should be directed to the undersigned at (571) 272-3222.

Kenya A. McLaughlin

Kenya A. McLaughlin
Petitions Attorney
Office of Petitions

UNITED STATES PATENT AND TRADEMARK OFFICE

Commissioner for Patents
United States Patent and Trademark Office
P.O. Box 1450
Alexandria, VA 22313-1450
www.uspto.gov

FINNEGAN, HENDERSON, FARABOW, GARRETT & DUNNER
LLP
1300 I STREET, NW
WASHINGTON DC 20005

COPY MAILED

OCT 14 2004

OFFICE OF PETITIONS

ON PETITION

In re Application of
Ernest Beutler et al.
Application No. 10/856,167
Filed: May 27, 2004
Attorney Docket No. A1592Q-US-DIV

This is a decision on the petition under 37 CFR 1.10 (c) filed August 30, 2004 to correct the filing date to May 27, 2004, rather than the presently accorded filing date of May 28, 2004.

Petitioner alleges that the application was deposited in Express Mail service on May 27, 2004. In support, on August 30, 2004, petitioner supplied a copy of Express Mail Label No. EV533070762US (the same Express Mail number found on the transmittal sheet accompanying the original application papers located in the official file). The "date-in" on the Express Mail Label is May 27, 2004.

In view of the above, the petition is granted and since no fee is due, none will be charged to petitioner's deposit account.

The application is being forwarded to the Office of Initial Patent Examination for correction of the **filing date to May 27, 2004** and for issuance of a corrected filing receipt.

Telephone inquiries related to this matter should be directed to the undersigned Petitions Attorney at (571) 272-3212.

Patricia Faison-Ball

Patricia Faison-Ball
Senior Petitions Attorney
Office of Petitions

UNITED STATES PATENT AND TRADEMARK OFFICE

UNITED STATES DEPARTMENT OF COMMERCE
United States Patent and Trademark Office
Address: COMMISSIONER FOR PATENTS
P.O. Box 1450
Alexandria, Virginia 22313-1450
www.uspto.gov

APPL NO.	FILING OR 371 (c) DATE	ART UNIT	FIL FEE REC'D	ATTY.DOCKET NO	DRAWINGS	TOT CLMS	IND CLMS
10/856,167	05/27/2004	1634	770	A1592Q-US-DIV	10	14	2

CONFIRMATION NO. 7497

CORRECTED FILING RECEIPT

OC000000014157975

22852
FINNEGAN, HENDERSON, FARABOW, GARRETT & DUNNER LLP
1300 I STREET, NW
WASHINGTON, DC 20005

Date Mailed: 10/21/2004

Receipt is acknowledged of this regular Patent Application. It will be considered in its order and you will be notified as to the results of the examination. Be sure to provide the U.S. APPLICATION NUMBER, FILING DATE, NAME OF APPLICANT, and TITLE OF INVENTION when inquiring about this application. Fees transmitted by check or draft are subject to collection. Please verify the accuracy of the data presented on this receipt. **If an error is noted on this Filing Receipt, please write to the Office of Initial Patent Examination's Filing Receipt Corrections, facsimile number 703-746-9195. Please provide a copy of this Filing Receipt with the changes noted thereon. If you received a "Notice to File Missing Parts" for this application, please submit any corrections to this Filing Receipt with your reply to the Notice. When the USPTO processes the reply to the Notice, the USPTO will generate another Filing Receipt incorporating the requested corrections (if appropriate).**

Applicant(s)

Ernest Beutler, La Jolla, CA;
Richard Bruce, Los Altos, CA;
Scott A. Elrod, La Honda, CA;
John Stuart Fitch, Los Altos, CA;
Huangpin Ben Hsieh, Palo Alto, CA;
Eric Peeters, Fremont, CA;
Richard A. Lerner, La Jolla, CA;

Assignment For Published Patent Application

Xerox Corporation
The Scripps Research Institute

Power of Attorney: The patent practitioners associated with Customer Number **22852**.

Domestic Priority data as claimed by applicant

This application is a DIV of 10/121,264 04/12/2002
which claims benefit of 60/329,277 10/11/2001

Foreign Applications

If Required, Foreign Filing License Granted: 08/16/2004

The country code and number of your priority application, to be used for filing abroad under the Paris

Convention, is US10/856,167

Projected Publication Date: 11/25/2004

Non-Publication Request: No

Early Publication Request: No

Title

Devices and methods for detecting genetic sequences

Preliminary Class

435

LICENSE FOR FOREIGN FILING UNDER
Title 35, United States Code, Section 184
Title 37, Code of Federal Regulations, 5.11 & 5.15

GRANTED

The applicant has been granted a license under 35 U.S.C. 184, if the phrase "IF REQUIRED, FOREIGN FILING LICENSE GRANTED" followed by a date appears on this form. Such licenses are issued in all applications where the conditions for issuance of a license have been met, regardless of whether or not a license may be required as set forth in 37 CFR 5.15. The scope and limitations of this license are set forth in 37 CFR 5.15(a) unless an earlier license has been issued under 37 CFR 5.15(b). The license is subject to revocation upon written notification. The date indicated is the effective date of the license, unless an earlier license of similar scope has been granted under 37 CFR 5.13 or 5.14.

This license is to be retained by the licensee and may be used at any time on or after the effective date thereof unless it is revoked. This license is automatically transferred to any related applications(s) filed under 37 CFR 1.53(d). This license is not retroactive.

The grant of a license does not in any way lessen the responsibility of a licensee for the security of the subject matter as imposed by any Government contract or the provisions of existing laws relating to espionage and the national security or the export of technical data. Licensees should apprise themselves of current regulations especially with respect to certain countries, of other agencies, particularly the Office of Defense Trade Controls, Department of State (with respect to Arms, Munitions and Implements of War (22 CFR 121-128)); the Office of Export Administration, Department of Commerce (15 CFR 370.10 (j)); the Office of Foreign Assets Control, Department of Treasury (31 CFR Parts 500+) and the Department of Energy.

NOT GRANTED

No license under 35 U.S.C. 184 has been granted at this time, if the phrase "IF REQUIRED, FOREIGN FILING LICENSE GRANTED" DOES NOT appear on this form. Applicant may still petition for a license under 37 CFR 5.12, if a license is desired before the expiration of 6 months from the filing date of the application. If 6 months has lapsed from the filing date of this application and the licensee has not received any indication of a secrecy order under 35 U.S.C. 181, the licensee may foreign file the application pursuant to 37 CFR 5.15(b).

UNITED STATES PATENT AND TRADEMARK OFFICE

JAN 15 2008

Commissioner for Patents
United States Patent and Trademark Office
P.O. Box 1450
Alexandria, VA 22313-1450
www.uspto.gov

BOZICEVIC, FIELD & FRANCIS LLP
1900 UNIVERSITY AVENUE
SUITE 200
EAST PALO ALTO CA 94303

In re Application of	:
Chen et al.	:
Serial No.: 10/856,185	: PETITION DECISION
Filed: May 27, 2004	:
Attorney Docket No.: STAN-298	:

This is in response to the petition under 37 CFR § 1.181, filed September 6, 2007 requesting that the after final amendment filed on July 20, 2007 be entered into the above referenced application. The delay in acting upon this petition is regretted.

BACKGROUND

A review of the file history shows that the examiner mailed a non-final Office action on March 22, 2006, setting forth a three-month shortened statutory period for reply. In this Office action, claim 1-11, 20-25 and 28-34 were rejected under 35 U.S.C. 112, second paragraph, as being indefinite for omitting a profiling step as recited in the preamble. Other indefinite issues were also raised. Claims 1-11, 20-25 and 28-34 were rejected under 35 U.S.C. 102 (e) as being anticipated by Schlom et al.

In response, applicants filed an amendment on June 22, 2006 arguing the merits of the Office action and amending the claims.

On September 25, 2006, setting forth a one-month shortened statutory period for reply, the examiner mailed a restriction requirement asking applicants to elect a single disclosed species for prosecution on the merits because the application contains claims directed to patentably distinct species.

In response thereto, on October 25, 2006, applicants elected the invention of Group b, an MHC multimer, with traverse and argued against making an election to Species 2.

The examiner mailed a non-responsive letter to applicants on January 24, 2007 indicating the claims submitted on October 25, 2006 were different from the claims submitted on June 22, 2006.

In response thereto on February 2, 2007, applicants filed a new claim set and responded to the restriction by electing the invention of Group b, an MHC multimer, with traverse. Applicants also argued that with respect to Species 2, an election cannot be made.

On April 20, 2007, the examiner mailed a final Office. In this Office action, claim 1-11, 20-25 and 28-34 were rejected under 35 U.S.C. 112, second paragraph, as being indefinite. The indefiniteness rejection made to claim 8 in the first Office action was maintained. The examiner also made new indefiniteness rejections based upon amendments to the claims. The 35 U.S.C. 102 (e) rejection over Schlom et al. was withdrawn. The restriction requirement was withdrawn. However, a new rejection was made to claims 1-11, 20-25 and 28-34 under 35 U.S.C. 103(a) over Albani, either alone, or in view of Brown et al.

In response, applicants filed an after final amendment on July 20, 2007 wherein the merits of the final Office action were argued, and the claims were amended.

On August 8, 2007, the examiner mailed an advisory action which stated that the amendment after final of July 20, 2007 would not be entered as the amendment raised new issues requiring further consideration and/or search; and the amendment did not simplify the issues for appeal.

In response thereto, applicants filed this petition on September 6, 2007 requesting that the amendment after final filed on July 20, 2007 be entered into the above referenced application.

DISCUSSION

Applicants request that the proposed amendments to the claims made in applicants response of July 20, 2007 be entered because the amendments put the claims in better form for appeal, and clarify issues under 35 U.S.C 112 that were newly raised in the final Office action of April 20, 2007.

Applicants also argue that the present claims were rejected in view of newly cited art, Albani et al., which raised new issues not previously considered.

There are two issues here, the first being whether the final was premature, and the second as to whether the after final amendment of July 20 2007 should have been entered.

As to finality, the base claim was amended significantly between the non-final and final. For example, the following language was added to claim one after the nonfinal rejection:" ...wherein an MHC-antigen binding complex comprises monomers or multimers of an alpha-MHC subunit, a Beta-MHC subunit, and a peptide antigen bound in the cleft formed by the Alpha and Beta subunits; and analyzing said cell population by evaluating phenotypic attributes."

Applicants have characterized this as merely setting forth a more complete definition of an MHC antigen binding complex. While this may be true, it also reasonably necessitates the citation of new art, since such new and specific limitations significantly narrow the scope of the claim in a manner that could not have been reasonably anticipated by the examiner, particularly since these new and specific limitations obviated the art of record, namely Schlom et al. Applicants'

argument that the scope of the claim was not changed is not persuasive, since clearly the limitation referenced above in claim one narrows what must be comprised within the MHC antigen binding complex.

Applicants have also argued that "the amendments were made in accordance with the examiner's specific request that a profiling step be added to claim 1..." The non-final rejection contains numerous 112 rejections, one of which rejects for lacking a profiling step. It is agreed that applicants have added a profiling step; however, the new 112 rejections (which are not 112 first rejections as stated by applicants, but are rather 112 second rejections) are raised against language contained within this newly added profiling limitation, and are issues that the examiner could not have anticipated, since such limitations were not previously recited. Therefore, the new rejections were properly made final, as was the new obviousness rejection over Albani either alone, or in view of Brown et al. for the same reasons supra.

Regarding the after final amendment of July 20, 2007, applicants' points are well taken that new issues are not raised. Thus, it is considered that these amendments clarify issues under 35 U.S.C 112 that were newly raised in the final Office action of April 20, 2007, and put the claims in better form for appeal.

DECISION

Applicants' argument that the after final amendment of July 20, 2007 should be entered is **GRANTED.**

This application will be forwarded to the examiner for an action not inconsistent with this decision.

Should there be any questions about this decision please contact Marianne C. Seidel, by letter addressed to Director, TC 1600, at the address listed above, or by telephone at 571-272-0584 or by facsimile sent to the general Office facsimile number, 703-872-9306.

Bruce Kisliuk
Director, Technology Center 1600

UNITED STATES PATENT AND TRADEMARK OFFICE

Commissioner for Patents
United States Patent and Trademark Office
P.O. Box 1450
Alexandria, VA 22313-1450
www.uspto.gov

SEAGATE TECHNOLOGY c/o MOFO NOVA
1650 TYSONS BOULEVARD
SUITE 300
MCLEAN VA 22102

COPY MAILED

JUN 08 2007

OFFICE OF PETITIONS

In re Application of

CHEN, Charles et al.
Application No. 10/856,209
Filed: March 27, 2004
Attorney Docket No. **STL 3334**

DECISION ON PETITION
TO WITHDRAW
FROM RECORD

This is a decision on the Request to Withdraw as attorney or agent of record under 37 C.F.R. § 1.36(b), filed March 30, 2007.

The request is **NOT APPROVED**.

A grantable request to withdraw as attorney/agent of record must be signed by every attorney/agent seeking to withdraw or contain a clear indication that one attorney is signing on behalf of another/others. A request to withdraw will not be approved unless at least 30 (thirty) days would remain between the date of approval and the later of the expiration date of a time to file a response or the expiration date of the maximum time period which can be extended under 37 C.F.R. § 1.136(a).

The request cannot be approved because the customer number 25227 is not associated with the case. Our records indicate customer number 50268 is associated with the case.

All future communications from the Office will continue to be directed to the above-listed address until otherwise notified by applicant.

Telephone inquiries concerning this decision should be directed to Tredelle Jackson at 571-272- 2783.

Monica A. Graves
Petitions Examiner
Office of Petitions

cc: **RAJ S. DAVE, PH.D.**
DARBY & DARBY P.C.
1500 K STREET, N.W.
SUITE 250
WASHINGTON, DC 20005-1714

UNITED STATES PATENT AND TRADEMARK OFFICE

UNITED STATES DEPARTMENT OF COMMERCE
United States Patent and Trademark Office
Address: COMMISSIONER FOR PATENTS
P.O. Box 1450
Alexandria, Virginia 22313-1450
www.uspto.gov

APPL NO.	FILING OR 371 (c) DATE	ART UNIT	FIL FEE REC'D	ATTY.DOCKET NO	DRAWINGS	TOT CLMS	IND CLMS
10/856,215	05/28/2004	1772	631	IGC-PT004.5	3	33	6

CONFIRMATION NO. 2471

CORRECTED FILING RECEIPT

OC000000014090553

3624
VOLPE AND KOENIG, P.C.
UNITED PLAZA, SUITE 1600
30 SOUTH 17TH STREET
PHILADELPHIA, PA 19103

Date Mailed: 10/14/2004

Receipt is acknowledged of this regular Patent Application. It will be considered in its order and you will be notified as to the results of the examination. Be sure to provide the U.S. APPLICATION NUMBER, FILING DATE, NAME OF APPLICANT, and TITLE OF INVENTION when inquiring about this application. Fees transmitted by check or draft are subject to collection. Please verify the accuracy of the data presented on this receipt. **If an error is noted on this Filing Receipt, please write to the Office of Initial Patent Examination's Filing Receipt Corrections, facsimile number 703-746-9195. Please provide a copy of this Filing Receipt with the changes noted thereon. If you received a "Notice to File Missing Parts" for this application, please submit any corrections to this Filing Receipt with your reply to the Notice. When the USPTO processes the reply to the Notice, the USPTO will generate another Filing Receipt incorporating the requested corrections (if appropriate).**

Applicant(s)

Thomas Falone, Mickelton, NJ;
Carmen DiMario, West Chester, PA;
Robert A. Vito, Berwyn, PA;

Assignment For Published Patent Application

Sting Free Company, Berwyn, PA

Power of Attorney: The patent practitioners associated with Customer Number **3624**.

Domestic Priority data as claimed by applicant

This application is a CON of 10/659,560 09/10/2003
which is a DIV of 09/939,319 08/27/2001 PAT 6,652,398

Foreign Applications

If Required, Foreign Filing License Granted: 07/24/2004

The number of your priority application, to be used for filing abroad under the Paris Convention is,
US10/856,215

Projected Publication Date: 11/04/2004

Non-Publication Request: No

Early Publication Request: No

**** SMALL ENTITY ****

Title

Vibration dampening grip cover for the handle of an implement

Preliminary Class

428

LICENSE FOR FOREIGN FILING UNDER
Title 35, United States Code, Section 184
Title 37, Code of Federal Regulations, 5.11 & 5.15

GRANTED

The applicant has been granted a license under 35 U.S.C. 184, if the phrase "IF REQUIRED, FOREIGN FILING LICENSE GRANTED" followed by a date appears on this form. Such licenses are issued in all applications where the conditions for issuance of a license have been met, regardless of whether or not a license may be required as set forth in 37 CFR 5.15. The scope and limitations of this license are set forth in 37 CFR 5.15(a) unless an earlier license has been issued under 37 CFR 5.15(b). The license is subject to revocation upon written notification. The date indicated is the effective date of the license, unless an earlier license of similar scope has been granted under 37 CFR 5.13 or 5.14.

This license is to be retained by the licensee and may be used at any time on or after the effective date thereof unless it is revoked. This license is automatically transferred to any related applications(s) filed under 37 CFR 1.53(d). This license is not retroactive.

The grant of a license does not in any way lessen the responsibility of a licensee for the security of the subject matter as imposed by any Government contract or the provisions of existing laws relating to espionage and the national security or the export of technical data. Licensees should apprise themselves of current regulations especially with respect to certain countries, of other agencies, particularly the Office of Defense Trade Controls, Department of State (with respect to Arms, Munitions and Implements of War (22 CFR 121-128)); the Office of Export Administration, Department of Commerce (15 CFR 370.10 (j)); the Office of Foreign Assets Control, Department of Treasury (31 CFR Parts 500+) and the Department of Energy.

NOT GRANTED

No license under 35 U.S.C. 184 has been granted at this time, if the phrase "IF REQUIRED, FOREIGN FILING LICENSE GRANTED" DOES NOT appear on this form. Applicant may still petition for a license under 37 CFR 5.12, if a license is desired before the expiration of 6 months from the filing date of the application. If 6 months has lapsed from the filing date of this application and the licensee has not received any indication of a secrecy order under 35 U.S.C. 181, the licensee may foreign file the application pursuant to 37 CFR 5.15(b).

UNITED STATES PATENT AND TRADEMARK OFFICE

Commissioner for Patents
United States Patent and Trademark Office
P.O. Box 1450
Alexandria, VA 22313-1450
www.uspto.gov

COPY MAILED
AUG 0 1 2006
OFFICE OF PETITIONS

Stephen S. Korniczky
Paul, Hastings, Janofsky & Walker
P.O. Box 919092
San Diego, CA 92191-9092

In re Application of	:	
Jayson Sakata	:	
Application No. 10/856,221	:	DECISION ON PETITION
Filed: May 28, 2004	:	TO WITHDRAW
Attorney Docket No. 39643.00003UTLU1	:	FROM RECORD
	:	

This is a decision on the Request to Withdraw as attorney or agent of record under 37 C.F.R. § 1.36(b), filed December 5, 2005.

The request is **NOT APPROVED** as moot.

A review of the file record indicates that the power of attorney to Stephen S. Korniczky and attorneys or agents associated with Customer Number 36183 has been revoked by the assignee of the patent application on May 20, 2005. Accordingly, the request to withdraw under 37 C.F.R. § 1.36(b) is moot.

All future communications from the Office will continue to be directed to the below-listed address until otherwise notified by applicant.

Telephone inquires concerning this decision should be directed to Terri Williams at 571-272-2991.

David Bucci
Petitions Examiner
Office of Petitions

cc: Noel C. Gillespie, Esq.
Baker & McKenzie
101 West Broadway, 12th floor
San Diego, CA 92101

UNITED STATES PATENT AND TRADEMARK OFFICE

COMMISSIONER FOR PATENTS
UNITED STATES PATENT AND TRADEMARK OFFICE
P.O. BOX 1450
ALEXANDRIA, VA 22313-1450
www.uspto.gov

SIEMENS CORPORATION
INTELLECTUAL PROPERTY DEPARTMENT
170 WOOD AVENUE SOUTH
ISELIN, NJ 08830

COPY MAILED

APR 05 2007

OFFICE OF PETITIONS

In re Application of	:	
James L. Corbeil, et al.	:	
Application No. 10/856,225	:	ON PETITION
Filed: May 28, 2004	:	
Attorney Docket No. 2003P88058 US01	:	

This is a decision in response to the petition under 37 CFR 1.137(b), filed December 1, 2006, to revive the above-identified application.

The petition is GRANTED.

This application became abandoned for failure to timely respond pursuant to 37 CFR 1.304 to a decision by the Board of Patent Appeals and Interferences mailed August 14, 2006. A Notice of Abandonment was mailed November 21, 2006. In response, the present petition was filed.

There is no indication that the person signing the instant petition was ever given a power of attorney or authorization of agent to prosecute the above-identified application. However, in accordance with 37 CFR 1.34(a), the signature of Vincent M. De Luca appearing on the petition shall constitute a representation to the United States Patent and Trademark Office that he is authorized to represent the particular party on whose behalf he acts. A courtesy copy of this decision is being mailed to petitioner. However, if Mr. De Luca desires to receive future correspondence regarding this application, the appropriate power of attorney or authorization of agent must be submitted. Until otherwise instructed, all future correspondence regarding this application will be directed solely to the address of record.

The petition satisfies the requirements of 37 CFR 1.137(b) in that petitioner has supplied (1) the reply in the form of a Request for Continued Examination (RCE) and fee of $790, and the submission required by 37 CFR 1.114; (2) the petition fee of $1,500; and (3) an adequate statement of unintentional delay.

This application is being referred to Technology Center AU 1732 for processing of the RCE and for appropriate action by the Examiner in the normal course of business on the amendment submitted in accordance with 37 CFR 1.114.

Telephone inquiries concerning this decision should be directed to the undersigned at (571) 272-3204. Inquiries relating to further prosecution should be directed to the Technology Center.

Sherry D. Brinkley
Petitions Examiner
Office of Petitions

cc: VINCENT DE LUCA
1300 I STREET, N.W.
WASHINGTON, DC 20005

UNITED STATES PATENT AND TRADEMARK OFFICE

Commissioner for Patents
United States Patent and Trademark Office
P.O. Box 1450
Alexandria, VA 22313-1450
www.uspto.gov

CHERNOFF, VILHAUER, MCCLUNG &
STENZEL
1600 ODS TOWER
601 SW SECOND AVENUE
PORTLAND OR 97204-3157

COPY MAILED
SEP 29 2006
OFFICE OF PETITIONS

In re Application of	:
John P. Dorscht	:
Application No. 10/856,246	: DECISION GRANTING PETITION
Filed: May 28, 2004	: UNDER 37 CFR 1.137(b)
Attorney Docket No. CDM/0779.9999	:

This is a decision on the petition under 37 CFR 1.137(b), filed May 5, 2006, to revive the above-identified application.

The petition is **GRANTED**.

The petition satisfies the conditions for revival pursuant to the provisions of 37 CFR 1.137(b) in that (1) the reply (2) the petition fee; and (3) the required statement of unintentional delay have been received. Accordingly, the reply to the Restriction Requirement of October 5, 2005, is accepted as having been unintentionally delayed.

Telephone inquiries concerning this decision should be directed to the undersigned at (571) 272-3208.

This matter is being referred to Technology Center AU 3725.

Karen Creasy

Karen Creasy
Petitions Examiner
Office of Petitions

SPE RESPONSE FOR CERTIFICATE OF CORRECTION

Paper No.:20100111

DATE : January 11, 2010

TO SPE OF : ART UNIT 3657

SUBJECT : Request for Certificate of Correction on Patent No.: 7597310

A response is requested with respect to the accompanying request for a certificate of correction.

Please complete this form and return with file, within **7** days to:
Certificates of Correction Branch - ST (South Tower) 9A22
Palm location **7590** - Tel. No. (703) 305-8309

With respect to the change(s) requested, correcting Office and/or Applicant's errors, should the patent read as shown in the certificate of correction? No new matter should be introduced, nor should the scope or meaning of the claims be changed.

Thank You For Your Assistance **Certificates of Correction Branch**

The request for issuing the above-identified correction(s) is hereby:

Note your decision on the appropriated box.

☒ **Approved** All changes apply.

☐ **Approved in Part** Specify below which changes **do not** apply.

☐ **Denied** State the reasons for denial below.

Comments:

/ROBERT A SICONOLFI/
Supervisory Patent Examiner.Art Unit 3657

UNITED STATES PATENT AND TRADEMARK OFFICE

UNITED STATES DEPARTMENT OF COMMERCE
United States Patent and Trademark Office
Address: COMMISSIONER FOR PATENTS
P.O. Box 1450
Alexandria, Virginia 22313-1450
www.uspto.gov

PACCAR Inc.
Attn: Law Department
P.O. Box 1518
Bellevue, WA 98009

Mail Date: 04/21/2010

Applicant	: Robert J. Solomon	: DECISION ON REQUEST FOR
Patent Number	: 7597310	: RECALCULATION of PATENT
Issue Date	: 10/06/2009	: TERM ADJUSTMENT IN VIEW
Appliction No	: 10/856,256	: OF WYETH AND NOTICE OF INTENT TO
Filed	: 05/27/2004	: ISSUE CERTIFICATE OF CORRECTION
		:

The Request for Recalculation is **GRANTED** to the extent indicated.

The patent term adjustment has been determined to be **175** days. The USPTO will *sua sponte* issue a certificate of correction reflecting the amount of PTA days determined by the recalculation.

Prior to the issuance of the certificate of correction, the USPTO will afford patentee an opportunity to be heard and request reconsideration. Accordingly, patentee has **one month or thirty (30) days**, whichever is longer, to file a request for reconsideration of this patent term adjustment calculation. See 35 U.S.C. 154(b)(3)(B)(ii) and 37 CFR 1.322(a)(4). No extensions of time will be granted under 37 CFR 1.136.

Patentee should use document code PET.OP if electronically filing a request for reconsideration of this patent term adjustment calculation. The patentee must also include the information required by 37 CFR 1.705(b)(2) and the fee required by 37 CFR 1.18(e). If patentee does not file a timely request for reconsideration of this patent term adjustment calculation including the information required by 37 CFR 1.705(b)(2) and the fee required by 37 CFR 1.18(e), the USPTO will issue a certificate of correction reflecting the PTA determination noted above.

Patentee should be aware that in order to preserve the right to review in the United States District Court for the District of Columbia of the USPTO patent term adjustment determination, patentee must ensure that he or she also take the steps required under 35 U.S.C. 154(b)(4)(A) in a timely manner. Nothing in the request for recalculation should be construed as providing an alternative time frame for commencing a civil action under 35 U.S.C. 154(b)(4)(A).

Any questions concerning this decision should be directed to the Office of Patent Legal Administration at 571-272-7702.

UNITED STATES PATENT AND TRADEMARK OFFICE

COMMISSIONER FOR PATENTS
UNITED STATES PATENT AND TRADEMARK OFFICE
P.O. BOX 1450
ALEXANDRIA, VA 22313-1450
www.uspto.gov

PERKINS COIE LLP/MSFT
P. O. BOX 1247
SEATTLE WA 98111-1247

MAILED

FEB 11 2009

OFFICE OF PETITIONS

In re Application of	:	
Buch et al.	:	
Application No. 10/856,259	:	ON APPLICATION FOR
Filed: 05/27/2004	:	PATENT TERM ADJUSTMENT
Atty Docket No. 418268034US	:	

This is in response to the "APPLICATION FOR PATENT TERM ADJUSTMENT RECONSIDERATION UNDER 37 C.F.R. §1.705(B)" filed January 9, 2009. Applicant requests that the determination of patent term adjustment be increased by 438 days to 1272 days assuming the patent issues on April 21, 2009. Applicant requests this correction on the basis that the Office will take in excess of three years to issue this patent and in light of the recent court decision in Wyeth v. Dudas, No. 07-1492 (D.D.C. September 30, 2008).

As the instant application for patent term adjustment requests reconsideration of the patent term adjustment as it relates to the Office's failure to issue the patent within three years of the filing date, a decision is being **held in abeyance** until after the actual patent date. Knowledge of the actual date the patent issues is required to calculate the amount, if any, of additional patent term patentee is entitled to for Office failure to issue the patent within three years. See 37 CFR 1.703(b).

Applicant is given **TWO (2) MONTHS** from the issue date of the patent to file a written request for reconsideration of the patent term adjustment for Office failure to issue the patent within three years. A copy of this decision should accompany

the request. Applicant may seek such consideration without payment of an additional fee. However, as to all other bases for seeking reconsideration of the patent term adjustment indicated in the patent, all requirements of 37 CFR 1.705(d) must be met. Requests for reconsideration on other bases must be timely filed and must include payment of the required fee.

Rather than file the request for reconsideration of Patent Term Adjustment at the time of the mailing of the notice of allowance, applicant is advised that they may wait until the time of the issuance of the patent and file a request for reconsideration of the patent term pursuant to 37 CFR 1.705(d). The USPTO notes that it does not calculate the amount of time earned pursuant to 37 CFR 1.702(b) until the time of the issuance of the patent and accordingly, the Office will consider any request for reconsideration of the patent term adjustment due to an error in the calculation of 37 CFR 1.702(b) to be timely if the request for reconsideration is filed within two months of the issuance of the patent.

The Office acknowledges submission of the $200.00 fee set forth in 37 CFR 1.18(e). No additional fees are required.

The application is being forwarded to the Office of Data Management for issuance of the patent. The patent term adjustment indicated on the patent (as shown on the Issue Notification mailed about three weeks prior to patent issuance) will include any additional adjustment accrued both for Office delay in issuing the patent more than four months after payment of the issue fee and satisfaction of all outstanding requirements, and for the Office taking in excess of three years to issue the patent (to the extent that the three-year period does not overlap with periods already accorded).

Telephone inquiries specific to this decision should be directed to Senior Petitions Attorney, Christina Tartera Donnell, at (571) 272-3211.

Kery A. Fries

Kery A. Fries
Senior Legal Advisor
Office Patent Legal Administration

UNITED STATES PATENT AND TRADEMARK OFFICE

Commissioner for Patents
United States Patent and Trademark Office
P.O. Box 1450
Alexandria, VA 22313-1450
www.uspto.gov

MERCHANT & GOULD
P.O. BOX 2903
MINNEAPOLIS MN 55402-0903

COPY MAILED

OCT 24 2005

OFFICE OF PETITIONS

ON PETITION

In re Application of	:	
Jonathan S. Goldick	:	
Application No. 10/856,266	:	
Filed: May 27, 2004	:	
Attorney Docket No. MS171157.2/40062.124USC1	:	

This is a decision on the petition, filed October 20, 2005, under 37 CFR 1.313(c)(2) to withdraw the above-identified application from issue after payment of the issue fee.

The petition is **GRANTED**.

The above-identified application is withdrawn from issue for consideration of a submission under 37 CFR 1.114 (request for continued examination). See 37 CFR 1.313(c)(2).

Petitioner is advised that the issue fee paid on August 23, 2005 in the above-identified application cannot be refunded. If, however, the above-identified application is again allowed, petitioner may request that it be applied towards the issue fee required by the new Notice of Allowance.[1]

Telephone inquiries should be directed to the undersigned at (571) 272-3208.

The examiner of Technology Center AU 2112 will consider the request for continued examination under 37 CFR 1.114.

Karen Creasy

Karen Creasy
Petitions Examiner
Office of Petitions
Office of the Deputy Commissioner
for Patent Examination Policy

---

[1] The request to apply the issue fee to the new Notice may be satisfied by completing and returning the new Issue Fee Transmittal Form PTOL-85(b), which includes the following language thereon: "Commissioner for Patents is requested to apply the Issue Fee and Publication Fee (if any) or re-apply any previously paid issue fee to the application identified above." Petitioner is advised that, whether a fee is indicated as being due or not, the Issue Fee Transmittal Form **must** be completed and timely submitted to avoid abandonment. Note the language in bold text on the first page of the Notice of Allowance and Fee(s) Due (PTOL-85).

UNITED STATES PATENT AND TRADEMARK OFFICE

UNITED STATES DEPARTMENT OF COMMERCE
United States Patent and Trademark Office
Address: COMMISSIONER FOR PATENTS
P.O. Box 1450
Alexandria, Virginia 22313-1450
www.uspto.gov

BLAKELY SOKOLOFF TAYLOR & ZAFMAN LLP
1279 OAKMEAD PARKWAY
SUNNYVALE, CA 94085-4040

Mail Date: 04/21/2010

Applicant	: Timm Falter	: DECISION ON REQUEST FOR
Patent Number	: 7617480	: RECALCULATION of PATENT
Issue Date	: 11/10/2009	: TERM ADJUSTMENT IN VIEW
Appliction No	: 10/856,287	: OF WYETH AND NOTICE OF INTENT TO
Filed	: 05/28/2004	: ISSUE CERTIFICATE OF CORRECTION
		:

The Request for Recalculation is **GRANTED** to the extent indicated.

The patent term adjustment has been determined to be **1226** days. The USPTO will *sua sponte* issue a certificate of correction reflecting the amount of PTA days determined by the recalculation.

Prior to the issuance of the certificate of correction, the USPTO will afford patentee an opportunity to be heard and request reconsideration. Accordingly, patentee has **one month or thirty (30) days**, whichever is longer, to file a request for reconsideration of this patent term adjustment calculation. See 35 U.S.C. 154(b)(3)(B)(ii) and 37 CFR 1.322(a)(4). No extensions of time will be granted under 37 CFR 1.136.

Patentee should use document code PET.OP if electronically filing a request for reconsideration of this patent term adjustment calculation. The patentee must also include the information required by 37 CFR 1.705(b)(2) and the fee required by 37 CFR 1.18(e). If patentee does not file a timely request for reconsideration of this patent term adjustment calculation including the information required by 37 CFR 1.705(b)(2) and the fee required by 37 CFR 1.18(e), the USPTO will issue a certificate of correction reflecting the PTA determination noted above.

Patentee should be aware that in order to preserve the right to review in the United States District Court for the District of Columbia of the USPTO patent term adjustment determination, patentee must ensure that he or she also take the steps required under 35 U.S.C. 154(b)(4)(A) in a timely manner. Nothing in the request for recalculation should be construed as providing an alternative time frame for commencing a civil action under 35 U.S.C. 154(b)(4)(A).

Any questions concerning this decision should be directed to the Office of Patent Legal Administration at 571-272-7702.

UNITED STATES PATENT AND TRADEMARK OFFICE

Commissioner for Patents
United States Patent and Trademark Office
P.O. Box 1450
Alexandria, VA 22313-1450
www.uspto.gov

KED & ASSOCIATES, LLP
P.O. Box 221200
Chantilly VA 20153-1200

MAILED

JUN 14 2010

OFFICE OF PETITIONS

In re Application of Lim et. al. :
Application No. 10/856,294 :
Filing Date: May 28, 2004 :
Attorney Docket No. K-1108 :

Decision on Petition

This is a decision on the petition under 37 CFR 1.137(b), filed February 26, 2010, to revive the application.

The petition is **granted**.

The application became abandoned for failure to reply in a timely manner to the final Office action issued December 26, 2008, which set a shortened statutory period for reply of three (3) months. An extension of time under the provisions of 37 CFR 1.136(a) was not obtained. Accordingly, the application became abandoned on March 27, 2009. A Notice of Abandonment was issued July 8, 2009.

The instant petition requests revival of the application.

A grantable petition under 37 CFR 1.137(b) must be accompanied by:

(1) The reply required to the outstanding Office action or notice, unless previously filed,
(2) The petition fee,
(3) A statement that the entire delay in filing the required reply from the due date for the reply until the filing of a grantable petition pursuant to 37 CFR 1.137(b) was unintentional, and
(4) A terminal disclaimer and fee if the application was filed on or before June 8, 1995 or if the application is a design application.

As to item (1), petitioner has submitted a reply to the final Office action in the form of an amendment, filed on February 26, 2010, and supplemented by a request for continued examination, filed on April 7, 2010.

As to item (2), petitioner has submitted the required petition fee of $810.

As to item (3), petitioner has stated the entire delay in filing the required reply from the due date for the reply until the filing of a grantable petition pursuant to 37 CFR 1.137(b) was unintentional.

Patent Agent Joanna Mason signed the petition. Agent Mason was not an attorney or agent of record at the time the application became abandoned. Therefore, it appears Agent Mason may not have been in a position to have firsthand or direct knowledge of the facts and circumstances of the delay. Nevertheless, the statement by Agent Mason that the entire delay was unintentional is being treated as having been made as the result of a reasonable inquiry into the facts and circumstances of such delay.[1] In the event that such an inquiry has not been made, petitioner must make such an inquiry. If such inquiry results in the discovery that a portion of the delay from the due date for the reply until the filing of a grantable petition pursuant to 37 CFR 1.137(b) was intentional, petitioner must notify the Office.

As to item (4), a terminal disclaimer is unnecessary.

The Petitioner has met the requirements to revive the above-identified application pursuant to 37 CFR 1.137(b). Therefore, the petition is granted and the application is revived.

Technology Center Art Unit 1792 will be informed of the instant decision and the application will be further examined in due course.

Telephone inquiries regarding this communication should be directed to Steven Brantley at (571) 272-3203 or in his absence to Amy Gandhi at (571) 272-6699.

Charles Steven Brantley
Senior Petitions Attorney
Office of Petitions

[1] *See* Changes to Patent Practice and Procedure, 62 *Fed. Reg.* at 53160 and 53178; 1203 *Off. Gaz. Pat. Office* at 88 and 103 (responses to comments 64 and 109) (applicant obligated under 37 CFR 10.18 to inquire into the underlying facts and circumstances when providing the statement required by 37 CFR 1.137(b) to the Patent and Trademark Office).

UNITED STATES PATENT AND TRADEMARK OFFICE

UNITED STATES DEPARTMENT OF COMMERCE
United States Patent and Trademark Office
Address: COMMISSIONER FOR PATENTS
P.O. Box 1450
Alexandria, Virginia 22313-1450
www.uspto.gov

FISH & RICHARDSON P.C.
P.O. BOX 1022
MINNEAPOLIS, MN 55440-1022

Mail Date: 04/20/2010

Applicant	: Billy S. Baker	: DECISION ON REQUEST FOR
Patent Number	: 7668407	: RECALCULATION of PATENT
Issue Date	: 02/23/2010	: TERM ADJUSTMENT IN VIEW
Appliction No	: 10/856,312	: OF WYETH AND NOTICE OF INTENT TO
Filed	: 05/28/2004	: ISSUE CERTIFICATE OF CORRECTION
		:

The Request for Recalculation is **GRANTED** to the extent indicated.

The patent term adjustment has been determined to be **1076** days. The USPTO will *sua sponte* issue a certificate of correction reflecting the amount of PTA days determined by the recalculation.

Prior to the issuance of the certificate of correction, the USPTO will afford patentee an opportunity to be heard and request reconsideration. Accordingly, patentee has **one month or thirty (30) days**, whichever is longer, to file a request for reconsideration of this patent term adjustment calculation. See 35 U.S.C. 154(b)(3)(B)(ii) and 37 CFR 1.322(a)(4). No extensions of time will be granted under 37 CFR 1.136.

Patentee should use document code PET.OP if electronically filing a request for reconsideration of this patent term adjustment calculation. The patentee must also include the information required by 37 CFR 1.705(b)(2) and the fee required by 37 CFR 1.18(e). If patentee does not file a timely request for reconsideration of this patent term adjustment calculation including the information required by 37 CFR 1.705(b)(2) and the fee required by 37 CFR 1.18(e), the USPTO will issue a certificate of correction reflecting the PTA determination noted above.

Patentee should be aware that in order to preserve the right to review in the United States District Court for the District of Columbia of the USPTO patent term adjustment determination, patentee must ensure that he or she also take the steps required under 35 U.S.C. 154(b)(4)(A) in a timely manner. Nothing in the request for recalculation should be construed as providing an alternative time frame for commencing a civil action under 35 U.S.C. 154(b)(4)(A).

Any questions concerning this decision should be directed to the Office of Patent Legal Administration at 571-272-7702.

UNITED STATES PATENT AND TRADEMARK OFFICE

Commissioner for Patents
United States Patent and Trademark Office
P.O. Box 1450
Alexandria, VA 22313-1450
www.uspto.gov

IPSG, P.C.
PO BOX 700640
SAN JOSE, CA 95170-0640

COPY MAILED

FEB 2 3 2005

OFFICE OF PETITIONS

In re Application of	:	
Albanese et al.	:	
Application No. 10/856,335	:	DECISION REFUSING STATUS
Filed: May 28, 2004	:	UNDER 37 CFR 1.47(a)
Attorney Docket No. VNDV-P001	:	

This is in response to the petition under 37 CFR 1.47(a), filed Monday, December 27, 2004. Applicants obtained a three-month extension of time to respond. Therefore, the petition is filed timely.

The petition is **dismissed**.

Applicants are given TWO (2) MONTHS from the mailing date of this decision to reply, correcting the below-noted deficiencies. Any reply should be entitled "Request for Reconsideration of Petition Under 37 CFR 1.47(a)," and should address the deficiencies noted below, except that the reply may include an oath or declaration executed by the non-signing inventor. Failure to respond will result in abandonment of the application. Any extensions of time will be governed by 37 CFR 1.136(a).

The above-identified application was filed on May 28, 2004, without an executed oath or declaration. Accordingly, on July 26, 2004, the Office mailed a "Notice to File Missing Parts of Nonprovisional Application," requiring, *inter alia*, an executed oath or declaration and a surcharge for its late filing.

In response, on Monday, December 27, 2004, applicants filed the present petition, a request for a three-month extension of time to reply, a declaration signed by 5 out of 6 inventors and a Statement of Facts of Damon K.I. Kalli.

A grantable petition under 37 CFR 1.47(a) requires: (1) proof that the non-signing inventor cannot be reached or refuses to sign the

oath or declaration after having been presented with the application papers (specification, claims and drawings); (2) an acceptable oath or declaration in compliance with 35 U.S.C. §§ 115 and 116; (3) the petition fee; and (4) a statement of the last known address of the non-signing inventor. Applicants lack item (2) as set forth above.

As to item (2), applicants failed to submit an oath or declaration for the patent application in compliance with 37 CFR 1.63 and 1.64. The declaration does not identify the residence, mailing address or country of citizenship of the nonsigning inventor, Hannes Marais. The Office notes that the oath or declaration must identify the country of citizenship of each inventor, as well as "[t]he mailing address, and the residence if an inventor lives at a location which is different from where the inventor customarily receives mail, of each inventor. . . ." 37 CFR 1.63(c)(1). Accordingly, to correct the deficiencies, applicants must submit an oath or declaration in compliance with 37 CFR 1.63 and 1.67, which identifies the entire inventive entity, the correct mailing address and citizenship of each inventor, and is signed by the 5 signing inventors on behalf of Hannes Marais, the nonsigning inventor.

The Manual of Patent Examining Procedure states: "The wording of an oath or declaration cannot be amended, altered or changed in any manner after it has been signed." MPEP 602.01. "If the wording is not correct or if all of the required affirmations have not been made, or if it has not been properly subscribed to, a new oath or declaration must be required." Id.

As stated above, applicants are not permitted to amend an executed declaration. Accordingly, applicants must submit a new declaration in compliance with 37 CFR 1.63 and 1.67.

Further correspondence with respect to this matter should be addressed as follows and **to the attention of Christina Tartera Donnell, Senior Petitions Attorney:**

By mail: Mail Stop Petition
Commissioner for Patents
P.O. Box 1450
Alexandria, VA 22313-1450

By FAX: (703) 872-9306
Attn: Office of Petitions

By hand: Customer Service Window
Randolph Building
401 Dulany Street
Alexandria, VA 22314

Telephone inquiries related to this decision may be directed to the undersigned at (571) 272-3211.

Christina Tartera Donnell

Christina Tartera Donnell
Senior Petitions Attorney
Office of Petitions

UNITED STATES PATENT AND TRADEMARK OFFICE

Commissioner for Patents
United States Patent and Trademark Office
P.O. Box 1450
Alexandria, VA 22313-1450
www.uspto.gov

IPSG, P.C.
PO BOX 700640
SAN JOSE, CA 95170-0640

COPY MAILED

JUN 24 2005

OFFICE OF PETITIONS

In re Application of
Albanese et al.
Application No. 10/856,335
Filed: May 28, 2004
Title: SYSTEM AND METHOD FOR GENERATING AND DISPLAYING INDEXED PRICE MODELING DATA

DECISION ACCORDING STATUS UNDER 37 CFR 1.47(a)

This is in response to the renewed petition under 37 CFR 1.47(a), filed on June 16, 2005. Petitioner obtained a two-month extension of time for filing a reply. Accordingly, the petition is filed timely.

The petition is granted.

Petitioner showed that Hannes Marais, the nonsigning inventor, refused to join in the filing of the above-identified application. Specifically, the petition included an email from Mr. Marais' counsel dated December 16, 2004, stating that Mr. Marais was unable to receive or review the application papers, as well as executed the declaration.

The Office review the above-identified application and papers and found them in compliance with 37 CFR 1.47(a). This application is hereby accorded Rule 1.47(a) status. As provided in Rule 1.47(c), this Office will forward notice of this application's filing to the non-signing inventor at the address given in the declaration. Notice of the filing of this application will also be published in the Official Gazette.

This matter is being referred to Technology Center 3624 for examination in due course.

Telephone inquiries regarding this decision should be directed to the undersigned at (571) 272-3211.

Christina Tartera Donnell

Christina Tartera Donnell
Senior Petitions Attorney
Office of Petitions

UNITED STATES PATENT AND TRADEMARK OFFICE

UNITED STATES DEPARTMENT OF COMMERCE
United States Patent and Trademark Office
Address: COMMISSIONER FOR PATENTS
P.O. Box 1450
Alexandria, Virginia 22313-1450
www.uspto.gov

KANG LIM
3494 CAMINO TASSAJARA ROAD #436
DANVILLE, CA 94506

Mail Date: 08/04/2010

Applicant	: Michael J. Albanese	: DECISION ON REQUEST FOR
Patent Number	: 7640198	: RECALCULATION of PATENT
Issue Date	: 12/29/2009	: TERM ADJUSTMENT IN VIEW
Application No	: 10/856,335	: OF WYETH AND NOTICE OF INTENT TO
Filed	: 05/28/2004	: ISSUE CERTIFICATE OF CORRECTION
		:

The Request for Recalculation is **GRANTED** to the extent indicated.

The patent term adjustment has been determined to be **1023** days. The USPTO will *sua sponte* issue a certificate of correction reflecting the amount of PTA days determined by the recalculation.

Prior to the issuance of the certificate of correction, the USPTO will afford patentee an opportunity to be heard and request reconsideration. Accordingly, patentee has **one month or thirty (30) days**, whichever is longer, to file a request for reconsideration of this patent term adjustment calculation. See 35 U.S.C. 154(b)(3)(B)(ii) and 37 CFR 1.322(a)(4). No extensions of time will be granted under 37 CFR 1.136.

Patentee should use document code PET.OP if electronically filing a request for reconsideration of this patent term adjustment calculation. The patentee must also include the information required by 37 CFR 1.705(b)(2) and the fee required by 37 CFR 1.18(e). If patentee does not file a timely request for reconsideration of this patent term adjustment calculation including the information required by 37 CFR 1.705(b)(2) and the fee required by 37 CFR 1.18(e), the USPTO will issue a certificate of correction reflecting the PTA determination noted above.

Patentee should be aware that in order to preserve the right to review in the United States District Court for the District of Columbia of the USPTO patent term adjustment determination, patentee must ensure that he or she also take the steps required under 35 U.S.C. 154(b)(4)(A) in a timely manner. Nothing in the request for recalculation should be construed as providing an alternative time frame for commencing a civil action under 35 U.S.C. 154(b)(4)(A).

Any questions concerning this decision should be directed to the Office of Patent Legal Administration at 571-272-7702.

UNITED STATES PATENT AND TRADEMARK OFFICE

Commissioner for Patents
United States Patent and Trademark Office
P.O. Box 1450
Alexandria, VA 22313-1450
www.uspto.gov

COPY MAILED

SEP 12 2006

OFFICE OF PETITIONS

Roger Pitt
Kirkpatrick & Lockhart Nicholson Graham, LLP
599 Lexington Avenue
33rd Floor
New York, NY 10022-6030

In re Application of	:	
David Schlossman et al.	:	
Application No. 10/856,336	:	DECISION ON PETITION
Filed: May 28, 2004	:	TO WITHDRAW
Attorney Docket No. DS500	:	FROM RECORD
	:	

This is a decision on the Request to Withdraw as attorney or agent of record under 37 C.F.R. § 1.36(b), filed April 27, 2006.

The request is **NOT APPROVED**.

A grantable request to withdraw as attorney/agent of record must be signed by every attorney/agent seeking to withdraw or contain a clear indication that one attorney is signing on behalf of another/others. A request to withdraw will not be approved unless at least 30 (thirty) days would remain between the date of approval and the later of the expiration date of a time to file a response or the expiration date of the maximum time period which can be extended under 37 C.F.R. § 1.136(a).

The Office cannot approve the request at this time since the reasons provided do not meet any of the conditions under the mandatory or permissive categories enumerated in 37 CFR 10.40. Section 10.40 of Title 37 of the Code of Federal Regulation states, "[a] practitioner shall not withdraw from employment in a proceeding before the Office without permission from the Office[.]" More specifically, 37 CFR 10.40 states, "[i]f paragraph (b) of this section is not applicable, a practitioner may not request permission to withdraw in matter pending before the Office unless such request or such withdrawal is" for one the permissive reasons listed in 37 CFR 10.40(c). The reasons set forth in the request, **written instructions from the assignee**, do not meet any of the conditions set forth in 37 CFR 10.40 because the assignee has not intervened in accordance with 37 CFR 3.71.

The Office cannot withdraw just three of the attorney(s) and/or agent(s) of record because a Customer Number originally appointed them.

All future communications from the Office will continue to be directed to the above-listed address until otherwise notified by applicant.

Telephone inquiries concerning this decision should be directed to Terri Williams at 571-272- 2991.

Amelia Au
Petitions Examiner
Office of Petitions

cc: Anthony H. Handal, Esq.
Brown Rudnick Berlack Israels LLP
Seven Times Square
New York, NY 10036

UNITED STATES PATENT AND TRADEMARK OFFICE

Commissioner for Patents
United States Patent and Trademark Office
P.O. Box 1450
Alexandria, VA 22313-1450
www.uspto.gov

JJGJr: 09-05

Paper No: __

PILLSBURY WINTHROP
SHAW PITTMAN LLP
P.O. BOX 10500
MCLEAN VA 22102

COPY MAILED
SEP 12 2005
OFFICE OF PETITIONS

In re Application of	:	
Bernard	:	
Application No. 10/856,339	:	ON PETITION
Filed: 27 May, 2004	:	
Attorney Docket No. 009584-0307529	:	

This is a decision on the petition filed on 31 March, 2005, and properly considered under 37 C.F.R. §1.53, to obtain a filing date of 27 May, 2004, for a non-publication request, and thus deem said request as timely filed.

For the reasons set forth below, the petition is **DISMISSED**.

BACKGROUND

After this application was deposited on 27 May, 2004:

- on 10 March, 2005, the Office mailed a Response to the Request for a Corrected Filing Receipt (as to the Request for Nonpublication), indicating that the Request for Nonpublication had not been filed timely;

- Petitioner filed the instant petition on 31 March, 2005, with a copy of a receipt card (see:

MPEP §503[1]), however, Petitioner failed to file with the petition a copy of the Request for Nonpublication that Petitioner avers was deposited on filing, and so there is no document of record averred to be a true copy of the missing document;

- notably, on 19 May, 2005, Petitioner filed Notice of Foreign Filing, and Rescission of Previous Nonpublication Request.

CONCLUSION

The petition is **dismissed**, and, the petition fee is waived.

This application is released to OIPE for further processing as necessary before being forwarded for substantive examination in due course.

---

[1] MPEP §503 provides in pertinent part:

§503 Application Number and Filing Receipt

* * *

A return postcard should be attached to *each* patent application for which a receipt is desired. It is important that the return postcard itemize all of the components of the application. If the postcard does not itemize each of the components of the application, it will not serve as evidence that any component which was not itemized was received by the United States Patent and Trademark Office (USPTO). It should be recognized that the identification of an application by application number does not necessarily signify that the USPTO has accepted the application as complete (37 C.F.R. §1.53(a)).

* * *

RETURN POSTCARD

If a receipt of any item (e.g., paper or fee) filed in the USPTO is desired, it may be obtained by enclosing with the paper a self-addressed postcard specifically identifying the item. The USPTO will stamp the receipt date on the postcard and place it in the outgoing mail. A postcard receipt which itemizes and properly identifies the items which are being filed serves as *prima facie* evidence of receipt in the USPTO of all the items listed thereon on the date stamped thereon by the USPTO.

The identifying data on the postcard should be so complete as to clearly identify the item for which receipt is requested. For example, the postcard should identify the applicant's name, application number (if known), confirmation number (if known), filing date, interference number, title of the invention, etc. The postcard should also identify the type of paper being filed, e.g., new application, affidavit, amendment, notice of appeal, appeal brief, drawings, fees, motions, supplemental oath or declaration, petition, etc., and the number of pages being submitted. If a new application is being filed, all parts of the application being submitted should be separately listed on the postcard, e.g., the number of pages of specification (including written description, claims and abstract), number of claims, number of sheets of drawings, number of pages of oath/declaration, number of pages of cover sheet (provisional application).

The postcard receipt will not serve as *prima facie* evidence of receipt of any item which is not adequately itemized on the postcard. For example, merely listing on the postcard "a complete application" or "patent application" will not serve as a proper receipt for each of the required components of an application (e.g., specification (including claims), drawings (if necessary), oath or declaration and the application filing fee) or missing portions (e.g., pages, sheets of drawings) of an application if one of the components or portion of a component is found to be missing by the USPTO. Each separate component should be specifically and properly itemized on the postcard. Furthermore, merely incorporating by reference in the postcard receipt, the items listed in a transmittal letter will not serve as *prima facie* evidence of receipt of those items.

The person receiving the item(s) in the USPTO will check the listing on the postcard against the item(s) being filed to be sure they are properly identified and that all the items listed on the postcard are presently being submitted to the USPTO. If any of the items listed on the postcard are not being submitted to the USPTO, those items will be crossed off and the post-card initialed by the person receiving the items. Upon return of a postcard receipt from the USPTO, the postcard receipt should be promptly reviewed by the person who filed the items to ensure that every item specifically denoted on the postcard was received by the USPTO. If the postcard receipt has been annotated to indicate that a particular item denoted on the postcard was not received by the USPTO, the postcard receipt will not serve as *prima facie* evidence of receipt of that item in the USPTO. (Emphasis supplied.)

Telephone inquiries specific to this decision should be directed to the undersigned at (571) 272-3214.

John J. Gillon, Jr.
Senior Attorney
Office of Petitions

UNITED STATES PATENT AND TRADEMARK OFFICE

Commissioner for Patents
United States Patent and Trademark Office
P.O. Box 1450
Alexandria, VA 22313-1450
www.uspto.gov

KOSAN BIOSCIENCES, INC.
3832 BAY CENTER PLACE
HAYWARD CA 94588

COPY MAILED

FEB 27 2007

OFFICE OF PETITIONS

In re Application of Robert Johnson Jr., et al Application No. 10/856,342 Filed: May 27, 2004 Attorney Docket No. 010114.01	DECISION GRANTING PETITION UNDER 37 CFR 1.137(b)

This is a decision on the petition under 37 CFR 1.137(b), filed October 19, 2006, to revive the above-identified application.

The petition is **GRANTED**.

The petition satisfies the conditions for revival pursuant to the provisions of 37 CFR 1.137(b) in that (1) the reply in the form of an amendment; (2) the petition fee; and (3) the required statement of unintentional delay have been received. Accordingly, the reply to the Nonfinal Rejection of January 24, 2006, is accepted as having been unintentionally delayed.

Telephone inquiries concerning this decision should be directed to the undersigned at (571) 272-3208.

This matter is being referred to Technology Center AU 1614.

Karen Creasy

Karen Creasy
Petitions Examiner
Office of Petitions

UNITED STATES PATENT AND TRADEMARK OFFICE

Commissioner for Patents
United States Patent and Trademark Office
P.O. Box 1450
Alexandria, VA 22313-1450
www.uspto.gov

KOSAN BIOSCIENCES, INC.
3832 BAY CENTER PLACE
HAYWARD CA 94588

COPY MAILED

FEB 27 2007

OFFICE OF PETITIONS

In re Application of :
Robert Johnson Jr., et al :
Application No. 10/856,344 : DECISION GRANTING PETITION
Filed: May 27, 2004 : UNDER 37 CFR 1.137(b)
Attorney Docket No. 010118.01 :

This is a decision on the petition under 37 CFR 1.137(b), filed October 19, 2006, to revive the above-identified application.

The petition is **GRANTED**.

The petition satisfies the conditions for revival pursuant to the provisions of 37 CFR 1.137(b) in that (1) the reply in the form of an amendment; (2) the petition fee; and (3) the required statement of unintentional delay have been received. Accordingly, the reply to the Nonfinal Rejection of January 25, 2006, is accepted as having been unintentionally delayed.

Telephone inquiries concerning this decision should be directed to the undersigned at (571) 272-3208.

This matter is being referred to Technology Center AU 1614.

Karen Creasy

Karen Creasy
Petitions Examiner
Office of Petitions

UNITED STATES PATENT AND TRADEMARK OFFICE

Commissioner for Patents
United States Patent and Trademark Office
P.O. Box 1450
Alexandria, VA 22313-1450
www.uspto.gov

OFFICE OF COUNSEL, CODE 004
NAVAL SURFACE WARFARE CENTER
CARDEROCK DIVISION
9500 MacARTHUR BOULEVARD
WEST BETHESDA, MD 20817

COPY MAILED

NOV 30 2006

OFFICE OF PETITIONS

In re Application of	:	
Jerry Rosson Smith, Jr.	:	
Application No. 10/856,359	:	DECISION GRANTING PETITION
Filed: May 27, 2004	:	UNDER 37 CFR 1.137(b)
Attorney Docket No. 84,736	:	

This is a decision on the petition under 37 CFR 1.137(b), filed May 17, 2006, to revive the above-identified application.

The petition is **GRANTED**.

This application became abandoned for failure to timely pay the issue fee on or before March 9, 2006, as required by the Notice of Allowance and Fee(s) Due mailed December 9, 2005. A Notice of Abandonment was mailed on May 4, 2006.

The petition satisfies the conditions for revival pursuant to the provisions of 37 CFR 1.137(b) in that (1) the reply in the form of payment of the issue fee; (2) the $1,500 petition fee; and (3) the required statement of unintentional delay have been received. Accordingly, the issue fee is accepted as having been unintentionally delayed.

Telephone inquiries concerning this decision should be directed to the undersigned at (571) 272-3218.

The application file is being referred to Publishing Division.

Frances Hicks
Petitions Examiner
Office of Petitions

UNITED STATES PATENT AND TRADEMARK OFFICE

Commissioner for Patents
United States Patent and Trademark Office
P.O. Box 1450
Alexandria, VA 22313-1450
www.uspto.gov

KAPRICE L. HARRIS
OFFICE OF CHIEF COUNSEL
NASA GLENN RESEARCH CTR
21000 BROOKPARK RD., MS 21-14
CLEVELAND OH 44135-3191

COPY MAILED

NOV 30 2007

OFFICE OF PETITIONS

In re Application of :
Gary J. Skoch et al :
Application No. 10/856,361 :
Filed: May 25, 2004 :
Atty Docket No. LEW 17,517-1 :

DECISION ON PETITION

This is a decision on the petition under 37 CFR 1.137(b), filed November 1, 2007, to revive the above-identified application.

The petition is **GRANTED**.

This application became abandoned for failure to timely pay the issue fee on or before September 24, 2007, as required by the Notice of Allowance and Fee(s) Due, mailed June 22, 2007. Accordingly, the date of abandonment of this application is September 25, 2007. A Notice of Abandonment was mailed on October 17, 2007.

The petition satisfies the requirements of 37 CFR 1.137(b) in that petitioner has supplied (1) the reply in the form of payment of the issue fee of $1,400, (2) the petition fee of $1,540, and (3) a proper statement of unintentional delay. Accordingly, the issue fee is accepted as having been unintentionally delayed.

Telephone inquiries concerning this decision should be directed to the undersigned at (571) 272-3218.

This application is being referred to the Office of Data Management for appropriate processing in accordance with this decision on petition.

Frances Hicks
Petitions Examiner
Office of Petitions

UNITED STATES PATENT AND TRADEMARK OFFICE

Commissioner for Patents
United States Patent and Trademark Office
P.O. Box 1450
Alexandria, VA 22313-1450
www.uspto.gov

SCHIFF HARDIN, LLP
PATENT DEPARTMENT
6600 SEARS TOWER
CHICAGO IL 60606-6473

COPY MAILED

OCT 01 2008

OFFICE OF PETITIONS

In re Application of	:	
Clemens HEINRICH	:	
Application No. 10/856,366	:	DECISION ON PETITION
Filed: May 28, 2004	:	
Attorney Docket No. P04,0234	:	

This is a decision on the petition under 37 CFR 1.137(b), filed May 09, 2008, to revive the above-identified application.

The petition is **DISMISSED**.

Any request for reconsideration of this decision must be submitted within TWO (2) MONTHS from the mail date of this decision. Extensions of time under 37 CFR 1.136(a) are permitted. The reconsideration request should include a cover letter entitled "Renewed Petition under 37 CFR 1.137(b)." This is **not** a final agency decision within the meaning of 5 U.S.C. § 704.

The above-identified application became abandoned in response to the petition under 37 CFR 1.138(c) filed May 09, 2008 requesting express abandonment to avoid publication of the above-identified application. The express abandonment was recognized on September 20, 2007. Accordingly, the above-identified application became abandoned on September 20, 2007.

A grantable petition under 37 CFR 1.137(b) must be accompanied by: (1) the required reply, unless previously filed; (2) the petition fee as set forth in 37 CFR 1.17(m); (3) a statement that the entire delay in filing the required reply from the due date for the reply until the filing of a grantable petition pursuant to 37 CFR 1.137(b) was unintentional; and (4) any terminal disclaimer (and fee as set forth in 37 CFR 1.20(d)) required by 37 CFR 1.137(d). Where there is a question as to whether either the abandonment or the delay in filing a petition under 37 CFR 1.137 was unintentional, the Commissioner may require additional information. See MPEP 711.03(c)(III)(C) and (D). This petition lacks item (3).

The showing of record raises questions as to whether the abandonment of this application was unintentional within the meaning of 35 USC 41(a)(7) and 37 CFR 1.137(b).

Petitioner asserts that the Notice of Express Abandonment was prepared and filed in error, and should have been prepared and filed for then co-pending application Serial No. 10/074,838. A petition to expressly abandon was prepared and filed for the above-identified application allegedly based upon a word processing error upon receipt of instructions from petitioner's client. Petitioner further asserts that the express abandonment was meant for application No. 10/074,838.

MPEP 711.01 states:

> The applicant (acquiesced in by an assignee of record), or the attorney/agent of record, if any, can sign an express abandonment. It is imperative that the attorney or agent of record exercise every precaution in ascertaining that the abandonment of the application is in accordance with the desires and best interests of the applicant prior to signing a letter of express abandonment of a patent application. Moreover, special care should be taken to ensure that the appropriate application is correctly identified in the letter of abandonment.

A thorough review of USPTO records shows that: (1) petitioner filed in the above-identified application, on September 20, 2007, a petition for express abandonment under 37 CFR 1.138(c) (2) the Office recognized the express abandonment in the above-identified application on September 27, 2007; (3) in application No. 10/074,838, the Office received a letter of express abandonment on July 26, 2007.

Initially it is noted that petitioner was notified by the Office of the abandoned status of this application on September 27, 2007. However, no petition to revive this application was filed until May 09, 2008. That is, while petitioner may not have been aware of the abandoned status of this application until a recent file audit, they were notified of the abandoned status of this application on September 27, 2007.

Petitioner has filed no evidence, which would lead one to reasonably believe that this application was unintentionally abandoned. In this regard, petitioner has failed to submit any evidence of the circumstances surrounding the abandonment of this application. For example, no copies of correspondence from petitioner's client regarding the abandonment of this application have been submitted. Additionally, no specific explanation has been given as to how and why the Notice of Express Abandonment was prepared and filed in error.

35 U.S.C. § 41(a)(7) applies to the situation of the above-identified application (i.e., to the revival of an abandoned application), however, it precludes the Director from reviving the above-identified application. This is because § 41(a)(7) only authorizes the Director to revive an

"unintentionally abandoned application." The legislative history of Public Law 97-247 reveals that the purpose of 35 U.S.C. § 41(a)(7) is to permit the Office to have more discretion than in 35 U.S.C. §§ 133 or 151 to revive abandoned applications in appropriate circumstances, but places a limit on this discretion, stating that "[u]nder this section a petition accompanied by either a fee of $500 or a fee of $50 would not be granted where the abandonment or the failure to pay the fee for issuing the patent was intentional as opposed to being unintentional or unavoidable." [emphasis added]. See H.R. Rep. No. 542, 97th Cong., 2d Sess. 6-7 (1982), reprinted in 1982 U.S.C.C.A.N. 770-71. The revival of an intentionally abandoned application, as this application was, is antithetical to the meaning and intent of the statute and regulation.

35 U.S.C. § 41(a)(7) authorizes the Commissioner to accept a petition "for the revival of an unintentionally abandoned application for a patent." As amended December 1, 1997, 37 CFR 1.137(b)(3) provides that a petition under 37 CFR 1.137(b) must be accompanied by a statement that the delay was unintentional, but provides that "[t]he Commissioner may require additional information where there is a question whether the delay was unintentional." Where there is a question whether the delay was unintentional, the petitioner must meet the burden of establishing that the delay was unintentional within the meaning of 35 U.S.C. § 41(a)(7) and 37 CFR 1.137(b). See In re Application of G, 11 USPQ2d 1378, 1380 (Comm'r Pats. 1989). Here in view of Express Abandonment of record, there is a question whether the entire delay was unintentional.

The Terminal Disclaimer filed concurrently with the instant petition has been placed in the file record. However, it has not been treated on its merits as it was not required in rendering the instant decision.

Further correspondence with respect to this matter should be addressed as follows:

By mail: Mail Stop PETITIONS
Commissioner for Patents
Post Office Box 1450
Alexandria, VA 22313-1450

By hand: Customer Service Window
Mail Stop Petitions
Randolph Building
401 Dulany Street
Alexandria, VA 22314

By fax: (571) 273-8300
ATTN: Office of Petitions

Telephone inquiries concerning this decision should be directed to Tredelle Jackson at (571) 272-2783.

Ramesh Krishnamurthy
Petitions Examiner
Office of Petitions

UNITED STATES PATENT AND TRADEMARK OFFICE

Commissioner for Patents
United States Patent and Trademark Office
P.O. Box 1450
Alexandria, VA 22313-1450
www.uspto.gov

SCHIFF HARDIN, LLP
PATENT DEPARTMENT
6600 SEARS TOWER
CHICAGO IL 60606-6473

MAILED

MAY 21 2010

OFFICE OF PETITIONS

In re Application of :
Clemens HEINRICH :
Application No. 10/856,366 : DECISION ON PETITION
Filed: May 28, 2004 :
Attorney Docket No. P04,0234 :

This is a decision on the renewed petition under 37 CFR 1.137(b), filed December 01, 2008, to revive the above-identified application.

The petition is **DISMISSED**.

Any request for reconsideration of this decision must be submitted within TWO (2) MONTHS from the mail date of this decision. Extensions of time under 37 CFR 1.136(a) are permitted. The reconsideration request should include a cover letter entitled "Renewed Petition under 37 CFR 1.137(b)." This is **not** a final agency decision within the meaning of 5 U.S.C. § 704.

The above-identified application became abandoned in response to the petition under 37 CFR 1.138 filed September 20, 2007, requesting express abandonment. The express abandonment was recognized on September 27, 2007. Accordingly, the above-identified application became abandoned on September 27, 2007.

A grantable petition under 37 CFR 1.137(b) must be accompanied by: (1) the required reply, unless previously filed; (2) the petition fee as set forth in 37 CFR 1.17(m); (3) a statement that the entire delay in filing the required reply from the due date for the reply until the filing of a grantable petition pursuant to 37 CFR 1.137(b) was unintentional; and (4) any terminal disclaimer (and fee as set forth in 37 CFR 1.20(d)) required by 37 CFR 1.137(d). Where there is a question as to whether either the abandonment or the delay in filing a petition under 37 CFR 1.137 was unintentional, the Commissioner may require additional information. See MPEP 711.03(c)(III)(C) and (D). This petition lacks item (3).

The showing of record raises questions as to whether the abandonment of this application was unintentional within the meaning of 35 USC 41(a)(7) and 37 CFR 1.137(b).

Petitioner asserts that the Notice of Express Abandonment was prepared and filed in error, and should have been prepared and filed for then co-pending application Serial No. 10/074,838. A petition to expressly abandon was prepared and filed for the above-identified application allegedly based upon a word processing error upon receipt of instructions from petitioner's client.

MPEP 711.01 states:

> The applicant (acquiesced in by an assignee of record), or the attorney/agent of record, if any, can sign an express abandonment. It is imperative that the attorney or agent of record exercise every precaution in ascertaining that the abandonment of the application is in accordance with the desires and best interests of the applicant prior to signing a letter of express abandonment of a patent application. Moreover, special care should be taken to ensure that the appropriate application is correctly identified in the letter of abandonment.

A thorough review of USPTO records shows that: (1) petitioner filed in the above-identified application, on September 20, 2007, a petition for express abandonment under 37 CFR 1.138; (2) the Office recognized the express abandonment in the above-identified application on September 27, 2007; (3) in application No. 10/074,838, the Office received a letter of express abandonment on July 26, 2007.

Initially it is noted that petitioner was notified by the Office of the abandoned status of this application on September 27, 2007. However, no petition to revive this application was filed until May 09, 2008. That is, while petitioner may not have been aware of the abandoned status of this application until a recent file audit, they were notified of the abandoned status of this application on September 27, 2007.

Petitioner's explanation of the circumstances surrounding the abandonment of the instant application has been reviewed. However, in view of the Express Abandonment of record, not withstanding the evidence included with the instant petition, the abandonment of the instant application cannot be regarded as unintentional.

35 U.S.C. § 41(a)(7) applies to the situation of the above-identified application (i.e., to the revival of an abandoned application), however, it precludes the Director from reviving the above-identified application. This is because § 41(a)(7) only authorizes the Director to revive an "unintentionally abandoned application." The legislative history of Public Law 97-247 reveals that the purpose of 35 U.S.C. § 41(a)(7) is to permit the Office to have more discretion than in 35 U.S.C. §§ 133 or 151 to revive abandoned applications in appropriate circumstances, but places a limit on this discretion, stating that "[u]nder this section a petition accompanied by either a fee of

$500 or a fee of $50 would not be granted where the abandonment or the failure to pay the fee for issuing the patent was intentional as opposed to being unintentional or unavoidable." [emphasis added]. See H.R. Rep. No. 542, 97th Cong., 2d Sess. 6-7 (1982), reprinted in 1982 U.S.C.C.A.N. 770-71. The revival of an intentionally abandoned application, as this application was, is antithetical to the meaning and intent of the statute and regulation.

35 U.S.C. § 41(a)(7) authorizes the Commissioner to accept a petition "for the revival of an unintentionally abandoned application for a patent." As amended December 1, 1997, 37 CFR 1.137(b)(3) provides that a petition under 37 CFR 1.137(b) must be accompanied by a statement that the delay was unintentional, but provides that "[t]he Commissioner may require additional information where there is a question whether the delay was unintentional." Where there is a question whether the delay was unintentional, the petitioner must meet the burden of establishing that the delay was unintentional within the meaning of 35 U.S.C. § 41(a)(7) and 37 CFR 1.137(b). See In re Application of G, 11 USPQ2d 1378, 1380 (Comm'r Pats. 1989). Here in view of Express Abandonment of record, there is a question whether the entire delay was unintentional.

The Terminal Disclaimer filed May 09, 2008, has been placed in the file record. However, it has not been treated on its merits as it was not required in rendering the instant decision.

Further correspondence with respect to this matter should be addressed as follows:

By mail: Mail Stop PETITIONS
Commissioner for Patents
Post Office Box 1450
Alexandria, VA 22313-1450

By hand: Customer Service Window
Mail Stop Petitions
Randolph Building
401 Dulany Street
Alexandria, VA 22314

By fax: (571) 273-8300
ATTN: Office of Petitions

Telephone inquiries concerning this decision should be directed to Tredelle Jackson at (571) 272-2783.

Ramesh Krishnamurthy

Ramesh Krishnamurthy
Petitions Examiner
Office of Petitions

UNITED STATES PATENT AND TRADEMARK OFFICE

Commissioner for Patents
United States Patent and Trademark Office
P.O. Box 1450
Alexandria, VA 22313-1450
www.uspto.gov

SCHIFF HARDIN LLP
PATENT DEPARTMENT
6600 SEARS TOWER
CHICAGO IL 60606-6473

COPY MAILED

NOV 29 2007

OFFICE OF PETITIONS

In re Application of	:	
Camus, et al.	:	
Application No. 10/856,367	:	ON PETITION
Filed: May 28, 2004	:	
Attorney Docket No. P04,0228	:	

This is a decision on the petition under 37 CFR 1.137(b), filed August 10, 2007, to revive the above-identified application.

The petition under 37 CFR 1.137(b) is **GRANTED**.

The above-identified application became abandoned for failure to timely file a response to the non-final Office action mailed November 17, 2006. This Office action set a shortened statutory period for reply of three (3) months. No reply having been received, the application became abandoned on February 18, 2007. The Office mailed a Notice of Abandonment on July 30, 2007.

With the instant petition, applicant paid the petition fee, made the proper statement of unintentional delay, and submitted the required reply in the form of an Amendment.

The matter is being forwarded to Group Art Unit 3737 for consideration of the Amendment filed August 10, 2007.

Telephone inquiries concerning this decision should be directed to the undersigned at (571)272-3207.

Cliff Congo
Petitions Attorney
Office of Petitions

UNITED STATES PATENT AND TRADEMARK OFFICE

Commissioner for Patents
United States Patent and Trademark Office
P.O. Box 1450
Alexandria, VA 22313-1450
www.uspto.gov

Raj. S Dave
Morrison & Foerster LLP
Suite 300
1650 Tysons Blvd.
McLean, VA 22102

COPY MAILED

AUG 0 6 2007

OFFICE OF PETITIONS

In re Application of

Mineo Yamakawa et al.
Application No. 10/856,372
Filed: May 27, 2004
Attorney Docket No. 070702008601

DECISION ON PETITION
TO WITHDRAW
FROM RECORD

This is a decision on the Request to Withdraw as attorney or agent of record under 37 C.F.R. § 1.36(b), filed March 23, 2007.

The request is **APPROVED**.

A grantable request to withdraw as attorney/agent of record must be signed by every attorney/agent seeking to withdraw or contain a clear indication that one attorney is signing on behalf of another/others. A request to withdraw will not be approved unless at least 30 (thirty) days would remain between the date of approval and the later of the expiration date of a time to file a response or the expiration date of the maximum time period which can be extended under 37 C.F.R. § 1.136(a).

The request was signed by Peter J. Davis on behalf of all attorneys of record. All attorneys/agents associated with the Customer Number 00000 have been withdrawn. Applicant is reminded that there is no attorney of record at this time.

The request to change the correspondence of record is not acceptable as the requested correspondence address is not that of: (1) the first named signing inventor; or (2) an intervening assignee of the entire interest under 37 C.F.R 3.71. All future communications from the Office will be directed to the first named signing inventor at the first copied address below until otherwise properly notified by the applicant.

There is an outstanding Office action mailed May 31, 2007 that requires a reply from the applicant.

Telephone inquiries concerning this decision should be directed to Terri Williams at 571-272-2991.

T. Williams

Terri Williams
Petitions Examiner
Office of Petitions

cc: **Mineo Yamakawa**
254 W. Rincon Ave., #B
Campbell, CA 95054

cc: **Raj S. Dave, Ph.D**
Darby & Darby P.C.
1500 K Street, N.W.
Suite 250
Washington DC 20005-1714

UNITED STATES PATENT AND TRADEMARK OFFICE

UNITED STATES DEPARTMENT OF COMMERCE
United States Patent and Trademark Office
Address: COMMISSIONER FOR PATENTS
P.O. Box 1450
Alexandria, Virginia 22313-1450
www.uspto.gov

APPLICATION NUMBER	FILING OR 371 (c) DATE	FIRST NAMED APPLICANT	ATTY. DOCKET NO./TITLE
10/856,372	05/27/2004	Mineo Yamakawa	070702008601

CONFIRMATION NO. 1718

OC000000025193482

Raj. S. Dave
Morrison & Foerster LLP
Suite 300
1650 Tysons Blvd.
McLean, VA 22102

Date Mailed: 08/03/2007

NOTICE REGARDING CHANGE OF POWER OF ATTORNEY

This is in response to the Power of Attorney filed 03/23/2007.

- The withdrawal as attorney in this application has been accepted. Future correspondence will be mailed to the new address of record. 37 CFR 1.33.

Jessi Williams

Office of Initial Patent Examination (571) 272-4000, or 1-800-PTO-9199
FORMER ATTORNEY/AGENT COPY

UNITED STATES PATENT AND TRADEMARK OFFICE

UNITED STATES DEPARTMENT OF COMMERCE
United States Patent and Trademark Office
Address: COMMISSIONER FOR PATENTS
P.O. Box 1450
Alexandria, Virginia 22313-1450
www.uspto.gov

SCHWEGMAN, LUNDBERG & WOESSNER, P.A.
P.O. BOX 2938
MINNEAPOLIS, MN 55402

Mail Date: 04/20/2010

Applicant	: Kelly Joseph Conlin	: DECISION ON REQUEST FOR
Patent Number	: 7591106	: RECALCULATION of PATENT
Issue Date	: 09/22/2009	: TERM ADJUSTMENT IN VIEW
Appliction No	: 10/856,380	: OF WYETH AND NOTICE OF INTENT TO
Filed	: 05/27/2004	: ISSUE CERTIFICATE OF CORRECTION
		:

The Request for Recalculation is **GRANTED** to the extent indicated.

The patent term adjustment has been determined to be **1469** days. The USPTO will *sua sponte* issue a certificate of correction reflecting the amount of PTA days determined by the recalculation.

Prior to the issuance of the certificate of correction, the USPTO will afford patentee an opportunity to be heard and request reconsideration. Accordingly, patentee has **one month or thirty (30) days**, whichever is longer, to file a request for reconsideration of this patent term adjustment calculation. See 35 U.S.C. 154(b)(3)(B)(ii) and 37 CFR 1.322(a)(4). No extensions of time will be granted under 37 CFR 1.136.

Patentee should use document code PET.OP if electronically filing a request for reconsideration of this patent term adjustment calculation. The patentee must also include the information required by 37 CFR 1.705(b)(2) and the fee required by 37 CFR 1.18(e). If patentee does not file a timely request for reconsideration of this patent term adjustment calculation including the information required by 37 CFR 1.705(b)(2) and the fee required by 37 CFR 1.18(e), the USPTO will issue a certificate of correction reflecting the PTA determination noted above.

Patentee should be aware that in order to preserve the right to review in the United States District Court for the District of Columbia of the USPTO patent term adjustment determination, patentee must ensure that he or she also take the steps required under 35 U.S.C. 154(b)(4)(A) in a timely manner. Nothing in the request for recalculation should be construed as providing an alternative time frame for commencing a civil action under 35 U.S.C. 154(b)(4)(A).

Any questions concerning this decision should be directed to the Office of Patent Legal Administration at 571-272-7702.

UNITED STATES PATENT AND TRADEMARK OFFICE

UNITED STATES DEPARTMENT OF COMMERCE
United States Patent and Trademark Office
Address: COMMISSIONER FOR PATENTS
P.O. Box 1450
Alexandria, Virginia 22313-1450
www.uspto.gov

SCHWEGMAN, LUNDBERG & WOESSNER, P.A.
P.O. BOX 2938
MINNEAPOLIS, MN 55402

Mail Date: 05/17/2010

Applicant : Kelly Joseph Conlin
Patent Number : 7591106
Issue Date : 09/22/2009
Application No : 10/856,380
Filed : 05/27/2004

: NOTICE CONCERNING IMPROPER
: CALCULATION OF PATENT TERM
: ADJUSTMENT BASED UPON USPTO
: IMPROPERLY MEASURING REDUCTION
: PERIOD UNDER 37 CFR 1.704(c)(10).

The United States Patent and Trademark Office (USPTO) discovered that in processing the recent recalculation decisions mailed in response to patentee's filed Request for Recalculation of Patent Term Adjustment in view of Wyeth, the USPTO improperly measured the reduction period for reductions under 37 CFR 1.704(c)(10). Pursuant to 37 CFR 1.704(c)(10), patentee's reduction begins on the date of filing the amendment under 37 CFR 1.312 ("1.312 amendment") or other related paper and ends on the date that the Office mails a response to the filing of the 1.312 amendment or other paper. It has been discovered that during the recalculation, the calculation failed to the limit the reduction to the mail date of the response to the 1.312 amendment or other paper. Accordingly, patentee's reductions were greater than warranted.

This notice **VACATES** the previous GRANTED request for recalculation and provides patentee with a revised GRANTED recalculation.

The patent term adjustment has been determined to be **1504** days. The USPTO will *sua sponte* issue a certificate of correction reflecting the amount of patent term adjustment (PTA) days determined by the recalculation.

Prior to the issuance of the certificate of correction, the USPTO will afford patentee an opportunity to be heard and request reconsideration. Accordingly, patentee has **one month or thirty (30) days** from the mail date of this notice, whichever is longer, to file a request for reconsideration of this PTA calculation. See 35 U.S.C. § 154(b)(3)(B)(ii) and 37 CFR 1.322(a)(4).

Patentee should use document code PET.OP if electronically filing a request for reconsideration of this PTA calculation. The patentee must also include the information required by 37 CFR 1.705(b)(2), and the fee required by 37 CFR 1.18(e). If patentee does not file a timely request for reconsideration of this PTA calculation, including the information required by 37 CFR 1.705(b)(2) and the fee required by 37 CFR 1.18(e), the USPTO will issue a certificate of correction reflecting the PTA determination noted above.

Patentee should be aware that in order to preserve the right of review of the USPTO's PTA determination in the United States District Court for the District of Columbia, patentee must ensure that the steps required under 35 U.S.C. § 154 (b)(4) are taken in a timely manner. Nothing in the request for recalculation should be construed as providing an alternative time frame for commencing a civil action under 35 U.S.C. § 154(b)(4).

UNITED STATES PATENT AND TRADEMARK OFFICE

Commissioner for Patents
United States Patent and Trademark Office
P.O. Box 1450
Alexandria, VA 22313-1450
www.uspto.gov

BENESCH, FRIEDLANDER, COPLAN & ARONOFF LLP
ATTN: IP DEPARTMENT DOCKET CLERK
200 PUBLIC SQUARE
SUITE 2300
CLEVELAND OH 44114-2378

MAILED

MAR 02 2009

OFFICE OF PETITIONS

In re Application of	:	
HANCOOK, Glenn	:	
Application No. 10/856,410	:	DECISION ON PETITION
Filed: May 28, 2004	:	TO WITHDRAW
Attorney Docket No. **26497.15**	:	FROM RECORD
	:	

This is a decision on the Request to Withdraw as attorney or agent of record under 37 C.F.R. § 1.36(b), filed January 08, 2009.

The request is **APPROVED**.

A grantable request to withdraw as attorney/agent of record must be signed by every attorney/agent seeking to withdraw or contain a clear indication that one attorney is signing on behalf of another/others. The Office requires the practitioner(s) requesting withdrawal to certify that he, she, or they have: (1) given reasonable notice to the client, prior to the expiration of the response period, that the practitioner(s) intends to withdraw from employment; (2) delivered to the client or a duly authorized representative of the client all papers and property (including funds) to which the client is entitled; and (3) notified the client of any responses that may be due and the time frame within which the client must respond, pursuant 37 CFR 10.40(c).

The request was signed by Luis A. Carrion on behalf of all attorneys of record who are associated with customer No. 21130. All attorneys/agents associated have been withdrawn. Applicant is reminded that there is no attorney of record at this time.

The request to change the correspondence address of record is not acceptable as the requested correspondence address is not that of: (1) the first named signing inventor; or (2) an intervening assignee of the entire interest under 37 C.F.R 3.71. All future communications from the Office will be directed to the first named signing inventor.

There is an outstanding Office action mailed October 01, 2008 that requires a reply from the applicant.

Telephone inquiries concerning this decision should be directed to Michelle R. Eason at 571-272-4231.

Michelle R. Eason

Michelle R. Eason
Paralegal Specialist
Office of Petitions

cc: **GLENN HANCOCK**
302 PONDEROSA TRAIL
JACKSON, GA 30233

cc: **JIM THOMSON**
c/o SOFTWARE INTERNATIONAL, INC.
24 FEDERAL PLAZA WEST
YOUNGSTOWN, OH 44503

UNITED STATES PATENT AND TRADEMARK OFFICE

Commissioner for Patents
United States Patent and Trademark Office
P.O. Box 1450
Alexandria, VA 22313-1450
www.uspto.gov

Merchant & Gould P.C.
P.O. Box 2903
Minneapolis, MN 55402-0903

COPY MAILED

JUN 0 5 2008

OFFICE OF PETITIONS

In re Application of :
Robert Steif :
Application No. 10/856,416 :
Filed: May 27, 2004 :
Attorney Docket No. 7542.222US01 :

ON PETITION

This is a decision on the petition under the unintentional provisions of 37 CFR 1.137(b), filed November 19, 2007, to revive the above-identified application.

The petition is **GRANTED**.

The application became abandoned for failure to reply in a timely manner to the final Office action mailed, May 10, 2007, which set a shortened statutory period for reply of three (3) months. No extensions of time under the provisions of 37 CFR 1.136(a) were obtained. Accordingly, the application became abandoned on August 11, 2007. A Notice of Abandonment was mailed on March 18, 2008.

The petition satisfies the requirements of 37 CFR 1.137(b) in that petitioner has supplied (1) the reply in the form of a Request for Continued Examination (RCE) and fee of $810 with the submission required by 37 CFR 1.114; (2) the petition fee of $1540; and (3) a proper statement of unintentional delay.

An extension of time under 37 CFR 1.136 must be filed prior to the expiration of the maximum extendable period for reply. *See* In re Application of S., 8 USPQ2d 1630, 1631 (Comm'r Pats. 1988). Since the $1,050 extension of time fee submitted on November 14, 2007 was subsequent to the maximum extendable period for reply, this fee is unnecessary and will be credited to petitioner's deposit account.

Telephone inquiries concerning this decision should be directed to Kimberly Inabinet at (571) 272-4618.

This application is being referred to Technology Center AU 1791 for processing of the RCE and for appropriate action by the Examiner in the normal course of business on the amendment submitted in accordance with 37 CFR 1.114.

Andrea Smith
Petitions Examiner
Office of Petitions

UNITED STATES PATENT AND TRADEMARK OFFICE

COMMISSIONER FOR PATENTS
UNITED STATES PATENT AND TRADEMARK OFFICE
P.O. BOX 1450
ALEXANDRIA, VA 22313-1450
www.uspto.gov

LEVINE & MANDELBAUM
444 MADISON AVENUE
35TH FLOOR
NEW YORK, NY 10022

COPY MAILED
FEB 18 2005
OFFICE OF PETITIONS

In re Application of :
Carli :
Filed: May 28, 2004 : ON PETITION
Application No. 10/856,419 :
Atty. Dkt. No.: METR0690US :

This decision is in response to the "PETITION CONTESTING NOTICE OF OMITTED(S) ITEMS IN A NONPROVISIONAL APPLICATION," filed November 17, 2004. This petition is being treated as a request for withdrawal of the Notice to File Omitted Items in a Nonprovisional Application and continued accordance of a filing date of May 28, 2004.

The petition is **GRANTED**.

The above-identified application was filed May 28, 2004. The Notice to File Missing Parts of Nonprovisional Application mailed October 5, 2004 indicated, *inter alia*, that the application had been accorded a filing date, but an English language translation and statement of accuracy of translation were required. Applicants timely responded by submitting the required translation and statement of accuracy on October 14, 2004. Thereafter, on November 8, 2004, a Notice to File Omitted Items in a Nonprovisional Application was mailed indicating that while the application had been accorded a filing date, page one of the specification appeared to have been omitted.

The Notice permits applicant to either: (1) establish prior receipt in the PTO of page 1 of the specification; (2) submit the omitted page of specification and accept the date of such submission as the application filing date. An assertion that the missing page of specification was in fact deposited in the PTO with the application papers must made by way of petition (and the appropriate petition fee) with evidence of such deposit. An applicant desiring to submit the omitted item in a nonprovisional application and accept the date of such submission as the application filing date must file any omitted item with an oath or declaration in compliance with 37 CFR 1.63 and 1.64 referring to such item and a petition under 37 CFR 1.182 (with the petition fee under 37 CFR 1.17(h)) requesting

the later filing date within two months of the date of the Notice (37 CFR 1.181(f)); or (3) take no action thereby constructively accepting the application filed as in the USPTO without the omitted item. Failure to take any action requires amendment of the specification to cancel reference to the omitted item.

The application was complete upon filing as indicated in the Notice to File Missing Parts of a Nonprovisional Application mailed October 5, 2004. Notwithstanding petitioner's argument that there were no pages missing from the specification, the English language translation submitted October 14, 2004 appeared on its face to have omitted page one from the specification. Petitioner's argument that the pages of the English language translation were merely misnumbered is found convincing. Nonetheless, the Notice to File Omitted Items in a Nonprovisional Application was improperly mailed given that the application as filed was in fact complete.

The Notice of Omitted Items in a Nonprovisional Application mailed November 8, 2004 was mailed in error and is hereby **WITHDRAWN**.

However, as petitioner indicates the English language translation of the pages of the specification submitted October 14, 2004 were misnumbered, petitioner is advised to promptly submit a preliminary amendment to the specification renumbering the pages of the specification prior to the issuance of the first Office action on the merits.

As the Notice to File Omitted Items in a Nonprovisional Application was mailed in error, the petition fee submitted herewith is unnecessary. Petitioner may request a refund by writing to the Finance Office, Refund Section. A copy of this decision should accompany any request for refund.

The application is being returned to Initial Patent Examination Division for further processing with a filing date of May 28, 2004.

Telephone inquiries related to this decision may be directed to the undersigned at (571) 272-3205.

Alesia M. Brown
Petitions Attorney
Office of Petitions

UNITED STATES PATENT AND TRADEMARK OFFICE

Commissioner for Patents
United States Patent and Trademark Office
P.O. Box 1450
Alexandria, VA 22313-1450
www.uspto.gov

KNOBBE MARTENS OLSON & BEAR LLP
2040 MAIN STREET
FOURTEENTH FLOOR
IRVINE CA 92614

MAILED

APR 0 1 2010

OFFICE OF PETITIONS

In re Patent No. 7,364,047	:	
Issued: April 29, 2008	:	
Application No. 10/856,421	:	ON PETITION
Filed: May 27, 2004	:	
Attorney Docket No. MEISS85.001AUS	:	

This is a decision on the petition, filed January 28, 2010, which is being treated as a request under 37 CFR 3.81(b)[1] to change the assignee on the issued patent.

The request is **DISMISSED**.

37 CFR 3.81(a) permits the patent to issue to the assignee, provided that, at the time the issue fee is paid, the name and correct address of an assignee is provided. 37 CFR 3.81(b) permits the patent to issue in the name and correct address of an assignee if the assignment was submitted after payment of the issue fee but ***prior to issuance of a patent***. Patent and Trademark Office assignment records disclose that an assignment correcting the assignee's name from "ZWEIGNIEDERLASSUNG DER HUHTAMAKI DEUTSCHLAND, GMBH & CO. KG" to "HUHTAMAKI RONSBERG, ZWEIGNIEDERLASSUNG DER HUHTAMAKI DEUTSCHLAND GMBH & CO. KG" was recorded on October 14, 2009, after the date of issuance of this patent.

Accordingly, since the assignment was not submitted for recordation until after issuance of this patent, issuance of a certificate of correction would not be proper. *See* MPEP Section 307.

Inquiries concerning this decision should be directed to the undersigned at (571) 272-7751.

Joan Olszewski

Joan Olszewski
Petitions Examiner
Office of Petitions

---

[1] *See* Official Gazette of June 22, 2004

UNITED STATES PATENT AND TRADEMARK OFFICE

Commissioner for Patents
United States Patent and Trademark Office
P.O. Box 1450
Alexandria, VA 22313-1450
www.uspto.gov

K&L GATES LLP
210 SIXTH AVENUE
PITTSBURGH PA 15222-2613

MAILED
JUN 24 2010
OFFICE OF PETITIONS

In re Application of	:	
Barry S. Hurewitz	:	
Application No. 10/856442	:	ON APPLICATION FOR
Filing or 371(c) Date: 05/28/2004	:	PATENT TERM ADJUSTMENT
Atty Docket No.:	:	
040064	:	

This is in response to the APPLICATION FOR PATENT TERM ADJUSTMENT, filed March 12, 2010. Applicant submits that the proper patent term adjustment to be indicated on the patent is at least 1361 days, not 830 days as calculated by the Office as of the mailing of the initial determination of patent term adjustment[1]. Applicant requests this correction solely on the basis that the Office will take in excess of three years to issue this patent. The application for patent term adjustment is properly treated under 37 C.F.R. § 1.705(b).

As the instant application for patent term adjustment requests reconsideration of the patent term adjustment as it relates to the Office's failure to issue the patent within 3 years of the filing date, the application for patent term adjustment under 37 CFR 1.705(b) is **DISMISSED as PREMATURE**.

Knowledge of the actual date the patent issues is required to calculate the amount, if any, of additional patent term patentee is entitled to for Office failure to issue the patent within 3 years. See § 1.702(b). (This is true even where a request for continued examination (RCE) was filed). The computer will not undertake the § 1.702(b) calculation until the actual date of issuance of the patent has been determined. Likewise, the computer will not calculate any further Office delay under § 1.702(a)(4) or applicant delay under § 1.704(c)(10) until the actual date of issuance of the patent has been determined. As such, the Office can not make a determination on the correctness of the patent term adjustment until the patent has issued.

Requesting reconsideration of the patent term adjustment to be indicated on the patent under 37 CFR 1.705(b) based on the initial determination of patent term adjustment and a projected issuance date of the patent (or even the filing date of the request for continued examination) is premature. Accordingly, it is appropriate to dismiss as premature such a request.

Rather than file an application for patent term adjustment under 37 CFR 1.705(b) contesting the 37 CFR 1.702(b) calculation at the time of the mailing of the notice of allowance, applicant is advised that they may wait until the time of the issuance of the patent and file a request for reconsideration of

[1] Applicant also requested a patent term adjustment of 1056 days. Petition at p.6.

the patent term adjustment pursuant to 37 CFR 1.705(d). As the USPTO does not calculate the amount of time earned pursuant to 37 CFR 1.702(b) until the time of the issuance of the patent, the Office will consider any request for reconsideration of the patent term adjustment due to an error in the calculation of 37 CFR 1.702(b) to be timely if the request for reconsideration is filed within two months of the issuance of the patent. However, as to all other bases for contesting the initial determination of patent term adjustment received with the notice of allowance, applicant must timely file an application for patent term adjustment prior to the payment of the issue fee[2].

The Office acknowledges submission of the $200.00 fee set forth in 37 CFR 1.18(e) for consideration of the application for patent term adjustment under 37 CFR 1.705(b).

Any request for reconsideration of the patent term adjustment indicated on the patent must be timely filed within 2 months after issuance pursuant to 37 CFR 1.705(d) and ***must*** include payment of the required fee under 37 CFR 1.18(e).

The application file does not indicate a change of address has been filed in this case, although the address given on the petition differs from the address of record. A change of address should be filed in this case in accordance with MPEP 601.03. A courtesy copy of this decision is being mailed to the address noted on the petition. However, until otherwise instructed, all future correspondence regarding this application will be mailed solely to the address of record.

The Office of Data Management has been advised of this decision. This application is being referred to the Office of Data Management for issuance of the patent.

Telephone inquiries specific to this decision should be directed to the undersigned at (571) 272-3232.

/Derek L. Woods/

Derek L. Woods
Attorney
Office of Petitions

CC: K & L GATES
HENRY S. OLIVER BLDG.
535 SMITHFIELD STREET
PITTSBURGH, PA 15222

---

[2] For example, if applicant disputes both the calculation of patent term adjustment under 37 CFR 1.702(a)(1) for Office failure to mail a first Office action or notice of allowance not later than fourteen months after the date on which the application was filed and under 37 CFR 1.702(b) for Office failure to issue a patent within three years of the actual filing date of the application, then applicant must still timely file an application for patent term adjustment prior to the payment of the issue fee to contest the calculation of Office delay in issuing a first Office action or notice of allowance. See 37 CFR 1.705(b) and 35 U.S.C. 154(b)(3)(B). A dispute as to the calculation of the §1.702(a)(1) period raised on request for reconsideration of patent term adjustment under 37 CFR 1.705(d) will be dismissed as untimely filed.

UNITED STATES PATENT AND TRADEMARK OFFICE

UNITED STATES DEPARTMENT OF COMMERCE
United States Patent and Trademark Office
Address: COMMISSIONER FOR PATENTS
P.O. Box 1450
Alexandria, Virginia 22313-1450
www.uspto.gov

Ryan, Mason & Lewis, LLP,
90 Forest Avenue
Locust Valley, NY 11560

Mail Date: 08/04/2010

Applicant	: Harsha S. Nagesh	: DECISION ON REQUEST FOR
Patent Number	: 7652986	: RECALCULATION of PATENT
Issue Date	: 01/26/2010	: TERM ADJUSTMENT IN VIEW
Application No	: 10/856,444	: OF WYETH AND NOTICE OF INTENT TO
Filed	: 05/28/2004	: ISSUE CERTIFICATE OF CORRECTION
		:

The Request for Recalculation is **GRANTED** to the extent indicated.

The patent term adjustment has been determined to be **1444** days. The USPTO will *sua sponte* issue a certificate of correction reflecting the amount of PTA days determined by the recalculation.

Prior to the issuance of the certificate of correction, the USPTO will afford patentee an opportunity to be heard and request reconsideration. Accordingly, patentee has **one month or thirty (30) days**, whichever is longer, to file a request for reconsideration of this patent term adjustment calculation. See 35 U.S.C. 154(b)(3)(B)(ii) and 37 CFR 1.322(a)(4). No extensions of time will be granted under 37 CFR 1.136.

Patentee should use document code PET.OP if electronically filing a request for reconsideration of this patent term adjustment calculation. The patentee must also include the information required by 37 CFR 1.705(b)(2) and the fee required by 37 CFR 1.18(e). If patentee does not file a timely request for reconsideration of this patent term adjustment calculation including the information required by 37 CFR 1.705(b)(2) and the fee required by 37 CFR 1.18(e), the USPTO will issue a certificate of correction reflecting the PTA determination noted above.

Patentee should be aware that in order to preserve the right to review in the United States District Court for the District of Columbia of the USPTO patent term adjustment determination, patentee must ensure that he or she also take the steps required under 35 U.S.C. 154(b)(4)(A) in a timely manner. Nothing in the request for recalculation should be construed as providing an alternative time frame for commencing a civil action under 35 U.S.C. 154(b)(4)(A).

Any questions concerning this decision should be directed to the Office of Patent Legal Administration at 571-272-7702.

UNITED STATES PATENT AND TRADEMARK OFFICE

Commissioner for Patents
United States Patent and Trademark Office
P.O. Box 1450
Alexandria, VA 22313-1450
www.uspto.gov

MAIL

AUG 14 2006

DIRECTOR OFFICE
TECHNOLOGY CENTER 2600

BIRCH STEWART KOLASCH & BIRCH
PO BOX 747
FALLS CHURCH VA 22040-0747

In re Application of
Thies SCHRADER, et al.
Application No. 10/856,472
Filed: May 28, 2004
For: **DISTRIBUTED MCU**

DECISION ON PETITION
TO MAKE SPECIAL

This is a decision on the petition filed July 19, 2006 under Manual of Patent Examination Procedure §708.02, VIII requesting accelerated examination.

The petition under Manual of Patent Examination Procedure §708.02, VIII, must:
(1) be filed prior to receiving any examination by the examiner,
(2) be accompanied by the required fee- $130,
(3) the claims should be directed to a single invention (if it is determined that the claims pertain to more than one invention, then applicant will have to make an election without traverse or forfeit accelerated examination status),
(4) state that a pre-examination search was made, and fully discuss the search method employed, such as classes and subclasses searched, publications, Chemical abstracts, patents, etc. A search made by a foreign patent office satisfies this requirement,
(5) be accompanied by a copy of each of the references most closely related to the subject matter encompassed by the claims if said references are not already of record,
(6) fully discuss the references, pointing out with the particularity required by 37 C.F.R. §1.111 (b) and (c), how the claimed subject matter is patentable over the references.

The petitioner meets all the above-listed requirements. Accordingly, the petition is **GRANTED**.

The application will retain its special status throughout its entire prosecution, including any appeal to the Board of Patent Appeals and Interferences, subject only to diligent prosecution by the applicant. The application file is being forwarded to the examiner for appropriate action in due course.

Krista Zele
Special Program Examiner
Technology Center 2600
Communications

UNITED STATES PATENT AND TRADEMARK OFFICE

COMMISSIONER FOR PATENTS
UNITED STATES PATENT AND TRADEMARK OFFICE
P.O. BOX 1450
ALEXANDRIA, VA 22313-1450
www.uspto.gov

PERKINS COIE LLP
PATENT-SEA
P.O. BOX 1247
SEATTLE, WA 98111-1247

COPY MAILED

MAR 08 2007

OFFICE OF PETITIONS

In re Application of	:	
AUTH et al	:	
Application No.: 10/856,475	:	DECISION ON PETITION
Filing Date: May 28, 2004	:	UNDER 37 CFR 1.78
Attorney Docket No.: 571208002US (CPTS-0002)	:	

This is a decision on the petitions under 37 CFR 1.78(a)(3) and 1.78(a)(6), filed September 21, 2006, to accept an unintentionally delayed claim under 35 U.S.C. 120, 365(c) and 119(e) for the benefit of the prior-filed applications set forth in the concurrently filed amendment.

The petitions are **GRANTED**.

The present nonprovisional application was filed after November 29, 2000, and the claim herein for the benefit of priority to the prior-filed nonprovisional applications is submitted after expiration of the period specified in 37 CFR 1.78(a)(2)(ii) and 1.78(a)(5)(ii). Therefore, this is a proper petition under 37 CFR 1.78(a)(3) and 1.78(a)(6).

A petition for acceptance of a claim for late priority under 37 CFR 1.78(a)(3) and 1.78(a)(6) is only applicable to those applications filed on or after November 29, 2000. Further, the petition is appropriate only after the expiration of the period specified in 37 CFR 1.78(a)(2)(ii) and 1.78(a)(5)(ii). In addition, the petition under 37 CFR 1.78(a)(3) and 1.78(a)(6) must be accompanied by:

(1) the reference required by 35 U.S.C. 120 and 119(e) and 37 CFR 1.78(a)(2)(i) and 1.78(a)(5)(i) of the prior-filed application, unless previously submitted;
(2) the surcharge set forth in 37 CFR 1.17(t); and
(3) a statement that the entire delay between the date the claim was due under 37 CFR 1.78(a)(2)(ii) and 1.78(a)(5)(ii) and the date the claim was filed was unintentional. The Director may require additional where there is a question whether the delay was unintentional.

The petition complies with the requirements for a grantable petition under 37 CFR 1.78(a)(3) and 1.78(a)(6) in that (1) a reference to the prior-filed applications has been included in an amendment to the first sentence of the specification following the title as provided by 37 CFR 1.78(a)(2)(iii) and 1.78(a)(5)(iii); (2) the surcharge fee required by 37 CFR 1.17(t) has been submitted; and (3) the petition contains a proper statement of unintentional delay. Accordingly, having found that the petition for acceptance of an unintentionally delayed claim for the benefit of priority under 35 U.S.C. 120 and 119(e) to the prior-filed applications satisfies the conditions of 37 CFR 1.78(a)(3) and 1.78(a)(6), the petition is granted.

The granting of the petition to accept the delayed benefit claim to the prior-filed applications under 37 CFR 1.78(a)(3) and 1.78(a)(6) should not be construed as meaning that this application is entitled to the benefit of the filing date of the prior-filed applications. In order for this application to be entitled to the benefit of the prior-filed applications, all other requirements under 35 U.S.C. 120 and 365(c) and 1.78(a)(1) and (a)(2) and under 35 U.S.C. 119(e) and 37 CFR 1.78(a)(4) and (a)(5) must be met. Similarly, the fact that the corrected Filing Receipt accompanying this decision on petition includes the prior-filed applications should not be construed as meaning that applicant is entitled to the claim for benefit of priority to the prior-filed applications noted thereon. Accordingly, the examiner will, in due course, consider this benefit claim and determine whether this application is entitled to the benefit of the earlier filing date.

A corrected Filing Receipt, which includes the priority claim to the prior-filed applications, accompanies this decision on petition.

Any questions concerning this matter may be directed to Bryan Lin at (571) 272-3303. All other inquiries concerning either the examination procedures or status of the application should be directed to the Technology Center.

This matter is being referred to Technology Center Art Unit 3739 for further action by the examiner as deemed appropriate in light of this decision.

Bryan Lin

Bryan Lin
Legal Examiner
Office of PCT Legal Administration

Boris Milef
Legal Examiner
Office of Petitions

ATTACHMENT: Corrected Filing Receipt

UNITED STATES PATENT AND TRADEMARK OFFICE

UNITED STATES DEPARTMENT OF COMMERCE
United States Patent and Trademark Office
Address: COMMISSIONER FOR PATENTS
P.O. Box 1450
Alexandria, Virginia 22313-1450
www.uspto.gov

APPL NO.	FILING OR 371 (c) DATE	ART UNIT	FIL FEE REC'D	ATTY.DOCKET NO	DRAWINGS	TOT CLMS	IND CLMS
10/856,475	05/28/2004	3739	1570	CPTS-0002	3	29	7

CONFIRMATION NO. 1086

CORRECTED FILING RECEIPT

OC000000021793371

25096
PERKINS COIE LLP
PATENT-SEA
P.O. BOX 1247
SEATTLE, WA 98111-1247

Date Mailed: 12/29/2006

Receipt is acknowledged of this regular Patent Application. It will be considered in its order and you will be notified as to the results of the examination. Be sure to provide the U.S. APPLICATION NUMBER, FILING DATE, NAME OF APPLICANT, and TITLE OF INVENTION when inquiring about this application. Fees transmitted by check or draft are subject to collection. Please verify the accuracy of the data presented on this receipt. **If an error is noted on this Filing Receipt, please mail to the Commissioner for Patents P.O. Box 1450 Alexandria Va 22313-1450. Please provide a copy of this Filing Receipt with the changes noted thereon. If you received a "Notice to File Missing Parts" for this application, please submit any corrections to this Filing Receipt with your reply to the Notice. When the USPTO processes the reply to the Notice, the USPTO will generate another Filing Receipt incorporating the requested corrections (if appropriate).**

Applicant(s)

David C. Auth, Kirkland, WA;
Robert L. Barry, Kirkland, WA;
Robert S. Schwartz, Rochester, MN;
Robert A. Van Tassel, Exelsior, MN;

Assignment For Published Patent Application

Coaptus Medical Corporation, Seattle, WA

Power of Attorney: The patent practitioners associated with Customer Number **25096**.

Domestic Priority data as claimed by applicant

This appln claims benefit of 60/474,055 05/28/2003
and is a CIP of 10/754,790 01/08/2004
which claims benefit of 60/447,760 02/13/2003
and claims benefit of 60/474,055 05/28/2003

Foreign Applications

If Required, Foreign Filing License Granted: 07/26/2004

The country code and number of your priority application, to be used for filing abroad under the Paris Convention, is US10/856,475

Projected Publication Date: Not Applicable

Non-Publication Request: No

Early Publication Request: No

Title

Transseptal left atrial access and septal closure

Preliminary Class

606

PROTECTING YOUR INVENTION OUTSIDE THE UNITED STATES

Since the rights granted by a U.S. patent extend only throughout the territory of the United States and have no effect in a foreign country, an inventor who wishes patent protection in another country must apply for a patent in a specific country or in regional patent offices. Applicants may wish to consider the filing of an international application under the Patent Cooperation Treaty (PCT). An international (PCT) application generally has the same effect as a regular national patent application in each PCT-member country. The PCT process **simplifies** the filing of patent applications on the same invention in member countries, but **does not result** in a grant of "an international patent" and does not eliminate the need of applicants to file additional documents and fees in countries where patent protection is desired.

Almost every country has its own patent law, and a person desiring a patent in a particular country must make an application for patent in that country in accordance with its particular laws. Since the laws of many countries differ in various respects from the patent law of the United States, applicants are advised to seek guidance from specific foreign countries to ensure that patent rights are not lost prematurely.

Applicants also are advised that in the case of inventions made in the United States, the Director of the USPTO must issue a license before applicants can apply for a patent in a foreign country. The filing of a U.S. patent application serves as a request for a foreign filing license. The application's filing receipt contains further information and guidance as to the status of applicant's license for foreign filing.

Applicants may wish to consult the USPTO booklet, "General Information Concerning Patents" (specifically, the section entitled "Treaties and Foreign Patents") for more information on timeframes and deadlines for filing foreign patent applications. The guide is available either by contacting the USPTO Contact Center at 800-786-9199, or it can be viewed on the USPTO website at http://www.uspto.gov/web/offices/pac/doc/general/index.html.

For information on preventing theft of your intellectual property (patents, trademarks and copyrights), you may wish to consult the U.S. Government website, http://www.stopfakes.gov. Part of a Department of Commerce initiative, this website includes self-help "toolkits" giving innovators guidance on how to protect intellectual property in specific countries such as China, Korea and Mexico. For questions regarding patent enforcement issues, applicants may call the U.S. Government hotline at 1-866-999-HALT (1-866-999-4158).

LICENSE FOR FOREIGN FILING UNDER
Title 35, United States Code, Section 184
Title 37, Code of Federal Regulations, 5.11 & 5.15

GRANTED

The applicant has been granted a license under 35 U.S.C. 184, if the phrase "IF REQUIRED, FOREIGN FILING LICENSE GRANTED" followed by a date appears on this form. Such licenses are issued in all applications where

the conditions for issuance of a license have been met, regardless of whether or not a license may be required as set forth in 37 CFR 5.15. The scope and limitations of this license are set forth in 37 CFR 5.15(a) unless an earlier license has been issued under 37 CFR 5.15(b). The license is subject to revocation upon written notification. The date indicated is the effective date of the license, unless an earlier license of similar scope has been granted under 37 CFR 5.13 or 5.14.

This license is to be retained by the licensee and may be used at any time on or after the effective date thereof unless it is revoked. This license is automatically transferred to any related applications(s) filed under 37 CFR 1.53(d). This license is not retroactive.

The grant of a license does not in any way lessen the responsibility of a licensee for the security of the subject matter as imposed by any Government contract or the provisions of existing laws relating to espionage and the national security or the export of technical data. Licensees should apprise themselves of current regulations especially with respect to certain countries, of other agencies, particularly the Office of Defense Trade Controls, Department of State (with respect to Arms, Munitions and Implements of War (22 CFR 121-128)); the Bureau of Industry and Security, Department of Commerce (15 CFR parts 730-774); the Office of Foreign Assets Control, Department of Treasury (31 CFR Parts 500+) and the Department of Energy.

NOT GRANTED

No license under 35 U.S.C. 184 has been granted at this time, if the phrase "IF REQUIRED, FOREIGN FILING LICENSE GRANTED" DOES NOT appear on this form. Applicant may still petition for a license under 37 CFR 5.12, if a license is desired before the expiration of 6 months from the filing date of the application. If 6 months has lapsed from the filing date of this application and the licensee has not received any indication of a secrecy order under 35 U.S.C. 181, the licensee may foreign file the application pursuant to 37 CFR 5.15(b).

UNITED STATES PATENT AND TRADEMARK OFFICE

Commissioner for Patents
United States Patent and Trademark Office
P.O. Box 1450
Alexandria, VA 22313-1450
www.uspto.gov

Juan J. Lizarraga
Suite 2300
909 Poydras Street
New Orleans, LA 70112-1010

COPY MAILED

AUG 0 6 2004

OFFICE OF PETITIONS

In re Application of	:	
Morgan Plaster	:	
Application No. 10/856,484	:	DECISION GRANTING PETITION
Filed: May 28, 2004	:	
Attorney Docket No. 82234A	:	

This is a decision on the petition filed by facsimile transmission on June 25, 2004, requesting that the above-identified application be accorded a filing date of May 28, 2004, instead of the presently accorded date of May 29, 2004.

The petition is **GRANTED**.

Applicant requests the later filing date on the basis that the application was purportedly deposited with the U.S. Postal Service (USPS) as Express Mail on May 28, 2004, pursuant to 37 CFR 1.10. In support, applicant has submitted a copy of the Express Mail label No. ER579032425US showing the 'date-in" of May 29, 2004, as well as a New Orleans, LA USPS date stamp of May 28, 2004, and a copy of the USPS Track/Confirm shipment details which shows that the Express Mail package in question was enroute on May 28, 2004 at 2:27 p.m. The same Express Mail receipt number appears on the original transmittal letter for the instant application.

The Office considers the date the paper or fee is shown to have been deposited as "Express Mail" to be the "Date-In" on the Express Mail label (See MPEP 513). That is the date that verifies that the package was actually mailed. However, the evidence herein is convincing that the application was deposited as "Express Mail" with the U.S. Postal Service on **May 28, 2004**. Accordingly, the application is entitled to a filing date of May 28, 2004 and has been so accorded.

The application is being returned to the Office of Initial Patent Examination (OIPE) for further processing with a filing date of **May 28, 2004**.

Telephone inquiries concerning this decision should be directed to Andrea Smith at (703) 308-6711. Questions related to OIPE processing should be directed to (703) 308-1202.

Andrea Smith
Petitions Examiner
Office of Petitions
Office of the Deputy Commissioner
for Patent Examination Policy

Brian Hearn
Petitions Examiner

UNITED STATES PATENT AND TRADEMARK OFFICE

Commissioner for Patents
United States Patent and Trademark Office
P.O. Box 1450
Alexandria, VA 22313-1450
www.uspto.gov

BAHRET & ASSOCIATES
320 NORTH MERIDIAN STREET
SUITE 510
INDIANAPOLIS, IN 46204

COPY MAILED

JUN 27 2005

OFFICE OF PETITIONS

In re Application of	:	
Daniel E. Leaird, et. al.	:	
Application No. 10/856,487	:	ON PETITION
Filed: May 28, 2004	:	
Attorney Docket No. 13054-221A	:	

This is a decision on the petition under 37 CFR 1.137(b), filed May 6, 2005, to revive the above-identified application.

In response to the Notice of Allowance mailed January 31, 2005, petitioner hereby submits $750 for the petition to revive fee, $700 for payment of the issue fee, and the statement of unintentional delay as required by 37 CFR 1.137(b).

Since petitioner has met the requirements to revive this application, pursuant to 37 CFR 1.137(b), the petition is **GRANTED**.

The application file is being referred to the Office of Publications for further processing into a patent.

Telephone inquiries concerning this decision should be directed to the undersigned at (571) 272-3226.

Andrea Smith
Petitions Examiner
Office of Petitions
Office of the Deputy Commissioner
for Patent Examination Policy

United States
Patent And
Trademark Office

P.O. Box 1450, Alexandria, Virginia 22313-1450 – www.uspto.gov

PETITION DECISION

09/08/04

Fay, Sharpe, Fagan, Minnich & McKee, LLP
1100 Superior Avenue
Seventh Floor
Cleveland, OH 44114-2518

Dear Applicant:

The Box PG Pub replacement drawings for application number 10/856495 received on 07/30/04 by the U. S. Patent and Trademark Office will be included for patent publication.

Telephone inquiries should be directed to Kaletus King, Office of Pre-Grant Publication 703 605-4283.

Kaletus King

Signature of Reviewer, Office of Pre-Grant Publication

UNITED STATES PATENT AND TRADEMARK OFFICE

Commissioner for Patents
United States Patent and Trademark Office
P.O. Box 1450
Alexandria, VA 22313-1450
www.uspto.gov

COPY MAILED
SEP 25 2006
OFFICE OF PETITIONS

Foley and Lardner LLP
Suite 500
3000 K Street NW
Washington, DC 20007

In re Application of	:	
Marion Wood et al.	:	
Application No. 10/856,499	:	DECISION ON PETITION
Filed: May 28, 2004	:	TO WITHDRAW
Attorney Docket No. 11000.1021c2	:	FROM RECORD

This is a decision on the Request to Withdraw as attorney or agent of record under 37 C.F.R. § 1.36(b), filed July 11, 2006.

The request is **APPROVED**.

A grantable request to withdraw as attorney/agent of record must be signed by every attorney/agent seeking to withdraw or contain a clear indication that one attorney is signing on behalf of another/others. A request to withdraw will not be approved unless at least 30 (thirty) days would remain between the date of approval and the later of the expiration date of a time to file a response or the expiration date of the maximum time period which can be extended under 37 C.F.R. § 1.136(a).

The request was signed by Richard C. Peet on behalf of all attorneys of record who are associated with Customer No. 22428.

All attorneys/agents associated with the Customer No. 22428 have been withdrawn.

Applicant is reminded that there is no attorney of record at this time.

The request to change the correspondence of record is not acceptable as the requested correspondence address is not that of: (1) the first named signing inventor; or (2) an intervening assignee of the entire interest under 37 C.F.R 3.71. All future communications from the Office will be directed to the first named signing inventor at the first copied address below until otherwise properly notified by the applicant.

There is no outstanding Office action at this time.

Telephone inquiries concerning this decision should be directed to Terri Williams at 571-272-2991.

David Bucci
Petitions Examiner
Office of Petitions

cc: **Marion Wood**
10 Tanekaha Road
Titrangi, Auckland
New Zealand

cc: **Cooley Godward LLP**
The Bowen Building
875 15th Street, NW
Washington, DC 20005-2221

UNITED STATES PATENT AND TRADEMARK OFFICE

UNITED STATES DEPARTMENT OF COMMERCE
United States Patent and Trademark Office
Address: COMMISSIONER FOR PATENTS
P.O. Box 1450
Alexandria, Virginia 22313-1450
www.uspto.gov

APPLICATION NUMBER	FILING OR 371 (c) DATE	FIRST NAMED APPLICANT	ATTY. DOCKET NO./TITLE
10/856,499	05/28/2004	Marion Wood	11000.1021c2

CONFIRMATION NO. 1047

OC000000020512719

OC000000020512719

22428
FOLEY AND LARDNER LLP
SUITE 500
3000 K STREET NW
WASHINGTON, DC 20007

Date Mailed: 09/20/2006

NOTICE REGARDING CHANGE OF POWER OF ATTORNEY

This is in response to the Power of Attorney filed 07/11/2006.

- The withdrawal as attorney in this application has been accepted. Future correspondence will be mailed to the new address of record. 37 CFR 1.33.

T. Williams

TERRI S WILLIAMS
OP (571) 272-2991

FORMER ATTORNEY/AGENT COPY

UNITED STATES PATENT AND TRADEMARK OFFICE

Commissioner for Patents
United States Patent and Trademark Office
P.O. Box 1450
Alexandria, VA 22313-1450
www.uspto.gov

COPY MAILED

JUL 29 2009

OFFICE OF PETITIONS

DAVID A. EINHORN, ESQ.
BAKER & HOSTETLER LLP
45 ROCKEFELLER PLAZA
NEW YORK, NY 10111

In re Application of	:	
Darryl Dougan	:	
Application No. 10/856,513	:	DECISION ON PETITION
Filed: May 28, 2004	:	
Attorney Docket No. 6208-046	:	

This is a decision in response to the petition, filed June 4, 2009, under 37 CFR 1.181 (no fee) requesting withdrawal of the holding of abandonment in the above-identified application. Petitioner has, alternatively, submitted a petition to revive under the provisions of 37 CFR 1.137(b).

The petitions are not signed by a registered patent attorney or patent agent of record. However, in accordance with 37 CFR 1.34, the signature of Ms. Isabel Cantallops appearing on the respective correspondences shall constitute a representation to the United States Patent and Trademark Office that she is authorized to represent the particular party on whose behalf she acts.

The petition under 37 CFR 1.181 is **GRANTED**.

This application was held abandoned for failure to reply in a timely manner to the non-final Office action, mailed March 21, 2008. A Notice of Abandonment was mailed on October 27, 2008. On June 4, 2009, the present petition was filed.

Petitioner asserts that the Office action dated March 21, 2008 was not received, as well as the Notice of Abandonment of October 27, 2008. Petitioner explains that the abandonment was recently discovered.

A review of the application file reveals no irregularities in the mailing of the Office action of March 21, 2008. Thus, there is a strong presumption that the correspondence was properly mailed to the applicant at the correspondence address of record. In the absence of demonstrated irregularities in mailing of this Office action, petitioner must submit evidence to overcome this presumption. The following showing is required:

> Practitioner must state that the Office action was not received at the correspondence address of record, and that a search of the practitioner's record(s), including any file jacket or the equivalent, and the application contents, indicates that the Office action was not received. A copy of the record(s) used by the practitioner where the non-received Office action would have been entered had it been received is required.
>
> A copy of the practitioner's record(s) required to show non-receipt of the Office action should include the master docket for the firm. That is, if a three month period for reply was set in the nonreceived Office action, a copy of the master docket report showing all replies docketed for a date three month from the mail date of the nonreceived Office action must be submitted as documentary proof of nonreceipt of the Office action. If no such master docket exists, the practitioner should so state and provide other evidence such as, but not limited to, the following: the application file jacket; incoming mail log; calendar; reminder system; or the individual docket record for the application in question.

Petitioner has adequately supported his claim of non-receipt with the evidence provided.

Accordingly, the Notice of Abandonment is hereby vacated and the holding of abandonment withdrawn.

In view of this decision and in accordance with petitioner's request, no consideration of the alternative petition to revive under 37 CFR 1.137(b) has been given.

This application is being referred to Technology Center AU 3693 for appropriate action in the normal course of business on the reply received June 4, 2009.

Telephone inquiries concerning this decision may be directed to the undersigned at (571) 272-3204. All other inquiries regarding this application should be directed to the Technology Center.

Sherry D. Brinkley
Petitions Examiner
Office of Petitions

UNITED STATES PATENT AND TRADEMARK OFFICE

Commissioner for Patents
United States Patent and Trademark Office
P.O. Box 1450
Alexandria, VA 22313-1450
www.uspto.gov

VENABLE LLP
P.O. BOX 34385
WASHINGTON DC 20043-9998

COPY MAILED

NOV 0 2 2007

OFFICE OF PETITIONS

In re Application of :
Robert E. HARMAN et al. :
Application No. 10/856,514 : DECISION ON PETITION
Filed: May 28, 2004 :
Attorney Docket No. 29953-209564 :

This is a decision on the petition under 37 CFR 1.137(b), filed July 19, 2007, to revive the above-identified application.

The petition is **DISMISSED**.

Any request for reconsideration of this decision must be submitted within TWO (2) MONTHS from the mail date of this decision. Extensions of time under 37 CFR 1.136(a) are permitted. The reconsideration request should include a cover letter entitled "Renewed Petition under 37 CFR 1.137(b)." This is **not** a final agency action within the meaning of 5 U.S.C. § 704.

The above-identified application became abandoned for failure to reply to the non-final Office action mailed August 8, 2006, which set a shortened statutory period for reply of three (3) months. No extensions of time under the provisions of 37 CFR 1.136(a) were obtained. Accordingly, the above-identified application became abandoned on November 9, 2006.

A grantable petition under 37 CFR 1.137(b) must be accompanied by: (1) the required reply, unless previously filed; (2) the petition fee as set forth in 37 CFR 1.17(m); (3) a statement that the entire delay in filing the required reply from the due date for the reply until the filing of a grantable petition pursuant to 37 CFR 1.137(b) was unintentional; and (4) any terminal disclaimer (and fee as set forth in 37 CFR 1.20(d)) required by 37 CFR 1.137(d). Where there is a question as to whether either the abandonment or the delay in filing a petition under 37 CFR 1.137 was unintentional, the Commissioner may require additional information. See MPEP 711.03(c)(III)(C) and (D). The instant petition lacks item(s) (1) and (3). Petitioner has submitted the petition fee of $1500; however, petitioner has failed to submit the required reply and a proper statement of unintentional delay. Neither a Continuation Application nor an affidavit was submitted as indicated by the petitioner.

Furthermore, the application file does not indicate a change of address has been filed in this case, although the address given on the petition differs from the address of record. A change of address should be filed in this case in accordance with MPEP 601.03. A courtesy copy of this decision is being mailed to the address noted on the petition. However, until otherwise instructed, all future correspondence regarding this application will be mailed solely to the address of record.

Further correspondence with respect to this matter should be addressed as follows:

By Mail: Mail Stop PETITION
Commissioner for Patents
P. O. Box 1450
Alexandria, VA 22313-1450

By hand: U. S. Patent and Trademark Office
Customer Service Window, Mail Stop Petitions
Randolph Building
401 Dulany Street
Alexandria, VA 22314

The centralized facsimile number is **(571) 273-8300.**

Telephone inquiries concerning this decision should be directed to Brian Sines at (571) 272-6051 or in his absence, the undersigned at (571) 272-7099.

David Bucci
Petitions Examiner
Office of Petitions

Cc: James T. Carmichael
Michael A. Minter
Miles & Stockbridge
1751 Pinnacle Drive
Suite 500
McLean, VA 22102-3833

UNITED STATES PATENT AND TRADEMARK OFFICE

Commissioner for Patents
United States Patent and Trademark Office
P.O. Box 1450
Alexandria, VA 22313-1450
www.uspto.gov

VENABLE LLP
P.O. BOX 34385
WASHINGTON DC 20043-9998

COPY MAILED

JAN 30 2008

OFFICE OF PETITIONS

In re Application of :
Robert E. Harman et al. :
Application No. 10/856,514 :
Filed: May 28, 2004 :
Attorney Docket No. 29953-209564 :

ON PETITION

This is a decision on a renewed petition under the unintentional provisions of 37 CFR 1.137(b), filed 15 November 2007, to revive the above-identified application.

The petition is **DISMISSED**.

Any request for reconsideration of this decision must be submitted within TWO (2) MONTHS from the mail date of this decision. Extensions of time under 37 CFR 1.136(a) are permitted. The reconsideration request should include a cover letter entitled "Renewed Petition under 37 CFR 1.137(b)." This is **not** a final agency action within the meaning of 5 U.S.C. § 704.

The application became abandoned for failure to timely file a reply to the non-final Office action of 08 August 2006. No extension of time pursuant to the provisions of 37 CFR 1.136(a) was obtained. Accordingly, the date of abandonment of this application is 09 November 2006.

A grantable petition under 37 CFR 1.137(b) must be accompanied by: (1) the required reply, unless previously filed; (2) the petition fee as set forth in 37 CFR 1.17(m); (3) a statement that the entire delay in filing the required reply from the due date for the reply until the filing of a grantable petition pursuant to 37 CFR 1.137(b) was unintentional; and (4) any terminal disclaimer (and fee as set forth in 37 CFR 1.20(d)) required by 37 CFR 1.137(d). Where there is a question as to whether either the abandonment or the delay in filing a petition under 37 CFR 1.137 was unintentional, the Director may require additional information. See MPEP 711.03(c)(II)(C) and (D). The instant petition lacks item(s) (3).

Petitioner, through the affidavit of Jodi L. Yingling (Yingling), asserts the delay was unintentional in that the patent owner had an obligation to notify the licensee if the patent owner declined to continue to prosecute the application and failed to do so. With respect to the affidavit of Yingling, it is noted Yingling does not appear to be the party having the right or authority to reply to avoid abandonment (or not reply) of the application as Yingling is neither an applicant for patent, an intervening assignee of the application, or other party in interest. While, Yingling states the patent owner had an obligation to notify the licensee if the patent owner declined to continue to prosecute the application and failed to do so, Yingling has provided no evidence of such an agreement. Accordingly, statements from all persons involved in the abandonment of the application including Keith G. Haddaway, John Denner, Theresa R. St. John, and Marina V. Schneller and what they knew with respect to assignments, license agreements, and abandonment with respect to the application are required. Petitioner should further explain why the decision to abandon the instant application should not be binding on all parties and why the decision to abandon the instant application was not an intentional delay.

Petitioner has not shown to the satisfaction of the Director that the entire delay herein was unintentional within the meaning of 35 U.S.C. § 41(a)(7) and 37 CFR 1.137(b).

35 U.S.C. § 41(a)(7) applies to the situation of the above-identified application (i.e., to the revival of an abandoned application), however, it precludes the Director from reviving the above-identified application. The patent statute at 35 U.S.C. § 41(a)(7) authorizes the Director to revive an "unintentionally abandoned application." The legislative history of Public Law 97-247 reveals that the purpose of 35 U.S.C. § 41(a)(7) is to permit the Office to have more discretion than in 35 U.S.C. §§ 133 or 151 to revive abandoned applications in appropriate circumstances, but places a limit on this discretion, stating that "[u]nder this section a petition accompanied by either a fee of $500 or a fee of $50 would not be granted where the abandonment or the failure to pay the fee for issuing the patent was intentional as opposed to being unintentional or unavoidable."[emphasis added]. See H.R. Rep. No. 542, 97th Cong., 2d Sess. 6-7 (1982), reprinted in 1982 U.S.C.C.A.N. 770-71. The revival of an intentionally abandoned application is antithetical to the meaning and intent of the statute and regulation.

35 U.S.C. § 41(a)(7) authorizes the Commissioner to accept a petition "for the revival of an unintentionally abandoned application for a patent." As amended December 1, 1997, 37 CFR 1.137(b)(3) provides that a petition under 37 CFR 1.137(b) must be accompanied by a statement that the delay was unintentional, but provides that "[t]he Commissioner may require additional information where there is a question whether the delay was unintentional." Where there is a question whether the delay was unintentional, the petitioner must meet the burden of establishing that the delay was unintentional within the meaning of 35 U.S.C. § 41(a)(7) and 37 CFR 1.137(b). See In re Application of G, 11 USPQ2d 1378, 1380 (Comm'r Pats. 1989). Here, the showing is that applicant intentionally discontinued prosecution and permitted the application to become abandoned, due to its own conclusion that the application was not worth pursuing.

The showing is further that applicant made no effort to seek revival until after becoming aware of what petitioner characterizes as an "error". The language of both 35 USC 41(a)(7) and 37 CFR 1.137(b) are clear and unambiguous, and furthermore, without qualification. That is, the delay in filing the reply during prosecution, as well as in filing the petition seeking revival, must have been, without qualification, "unintentional" for the reply to now be accepted on petition. The Office requires that the entire delay be at least unintentional as a prerequisite to revival of an abandoned application to prevent abuse and injury to the public. See H.R. Rep. No. 542, 97th Cong., 2d Sess. 7 (1982), reprinted in 1982 U.S.C.C.A.N. 771 ("[i]n order to prevent abuse and injury to the public the Commissioner . . . could require applicants to act promptly after becoming aware of the abandonment"). The December 1997 change to 37 CFR 1.137 did not create any new right to overcome an intentional delay in seeking revival, or in renewing an attempt at seeking revival, of an abandoned application. See Changes to Patent Practice and Procedure; Final Rule Notice, 62 Fed. Reg. 53131, 53160 (October 10, 1997), 1203 Off. Gaz. Pat. Office 63, 87 (October 21, 1997).

However, both the delay herein in filing the reply during prosecution, and in filing the petition after abandonment, are inconsistent with a finding that the entire delay herein was unintentional, such that revival is proper. Simply put, a course of conduct resulting in a delay that is, as here, purposefully chosen does not qualify as unintentional delay.

It is further noted that 35 U.S.C. § 41(a)(7) does not require an affirmative finding that the delay was intentional, but only an explanation as to why the petitioner has failed to carry his or her burden to establish that the delay was unintentional. Cf. Commissariat A. L'Energie Atomique v. Watson, 274 F.2d 594, 597, 124 USPQ 126, 128 (D.C. Cir. 1960)(35 U.S.C. § 133 does not require the Commissioner to affirmatively find that the delay was avoidable, but only to explain why the applicant's petition was unavailing); see also In re Application of G, supra (petition under 37 CFR 1.137(b) denied because the applicant failed to carry the burden of proof to establish that the delay was unintentional).

Here, while petitioner contends that the failure to reply during the pendency of the application was an "error", petitioner nevertheless did not even seek revival until there was a change in circumstance long after abandonment, i.e., until petitioner became aware that the licensee was not notified. However, a change in circumstances that occurred subsequent to the abandonment of an application does not render "unintentional" the delay resulting from a previous deliberate decision to permit an application to be abandoned. These matters simply confuse the question of whether there was a deliberate decision not to continue the prosecution of an application with why there was a deliberate decision not to continue the prosecution of an application. A delay resulting from a deliberately chosen course of action on the part of the applicant does not become an "unintentional" delay within the meaning of 37 CFR 1.137(b) because the applicant does not consider the claims to be patentable over the references relied upon in an outstanding Office action.

While the entire record has been carefully reviewed, the showing of record is inconsistent with a finding that the entire delay herein was unintentional:

Where the applicant deliberately permits an application to become abandoned (e.g., due to a conclusion that the claims are unpatentable, that a rejection in an Office action cannot be overcome, or that the invention lacks sufficient commercial value to justify continued prosecution), the abandonment of such application is considered to be a deliberately chosen course of action, and the resulting delay cannot be considered as "unintentional" within the meaning of 37 CFR 1.137(b). Likewise, where the applicant deliberately chooses not to seek or persist in seeking the revival of an abandoned application, or where the applicant deliberately chooses to delay seeking the revival of an abandoned application, the resulting delay in seeking revival of the abandoned application cannot be considered as "unintentional" within the meaning of 37 CFR 1.137(b). An intentional delay resulting from a deliberate course of action chosen by the applicant is not affected by: (1) the correctness of the applicant's (or applicant's representative's) decision to abandon the application or not to seek or persist in seeking revival of the application; (2) the correctness or propriety of a rejection, or other objection, requirement, or decision by the Office; or (3) the discovery of new information or evidence, or other change in circumstances subsequent to the abandonment or decision not to seek or persist in seeking revival. Obviously, delaying the revival of an abandoned application, by a deliberately chosen course of action, until the industry or a competitor shows an interest in the invention (a submarine application) is the antithesis of an "unavoidable" or "unintentional" delay. An intentional abandonment of an application, or an intentional delay in seeking either the withdrawal of a holding of abandonment in or the revival of an abandoned application, precludes a finding of unavoidable or unintentional delay pursuant to 37 CFR 1.137. See Changes to Patent Practice and Procedure; Final Rule Notice, 62 Fed. Reg. 53132 at 53158-59 (October 10, 1997), reprinted at 1203 Off. Gaz. Pat. Office, 65 at 86 (October 21, 1997) (citations omitted).

Where, as here, the applicant deliberately permits an application to become abandoned (e.g., due to a conclusion that the claims are unpatentable, that a rejection in an Office action cannot be overcome, or that the invention lacks sufficient commercial value to justify continued prosecution), the abandonment of such application is considered to be a deliberately chosen course of action, and the resulting delay cannot be considered as "unintentional" within the meaning of 37 CFR 1.137(b). See In re Application of G, supra. An intentional course of action is not rendered unintentional when, upon reconsideration, the applicant changes his or her mind as to the course of action that should have been taken. See In re Maldague, 10 USPQ2d 1477, 1478 (Comm'r Pat. 1988).

The power of attorney filed on 15 November 2007 is not acceptable as the statement under 37 CFR 3.73(b) provided an incorrect assignee and an incomplete chain of title. The correct assignee is Graham Packaging Plastic Products Inc.

The application file does not indicate a change of address has been filed in this case, although the address given on the petition differs from the address of record. A change of address should be filed in this case in accordance with MPEP 601.03. A courtesy copy of this decision is being mailed to the address noted on the petition. However, until otherwise instructed, all future correspondence regarding this application will be mailed solely to the address of record.

Further correspondence with respect to this matter should be addressed as follows:

By Mail: Mail Stop PETITION
Commissioner for Patents
P. O. Box 1450
Alexandria, VA 22313-1450

By hand: U. S. Patent and Trademark Office
Customer Service Window, Mail Stop Petitions
Randolph Building
401 Dulany Street
Alexandria, VA 22314

The centralized facsimile number is **(571) 273-8300.**

Telephone inquiries concerning this decision should be directed to Allen C. Ho at (571) 272-6052.

David Bucci
Petitions Examiner
Office of Petitions

Cc:
MILES & STOCKBRIDGE PC
1751 Pinnacle Drive
Suite 500
Mclean, VA 22102-3833

UNITED STATES PATENT AND TRADEMARK OFFICE

Commissioner for Patents
United States Patent and Trademark Office
P.O. Box 1450
Alexandria, VA 22313-1450
www.uspto.gov

MAR 9 2005

In re Application of	:
John J. Tomlinson	:
Application No. 10/856,521	: DECISION ON PETITION
Filed: May 28, 2004	:
Attorney Docket No. 6321-247	:

This is a decision on the petition to make special filed on October 5, 2004. The petition is based upon the practice described in MPEP § 708.02(VI) "Energy." Therefore, no petition fee is required.

The petition is granted.

In accordance with the practice in MPEP § 708.02(VI), petitioner has alleged that the invention materially contributes to the more efficient utilization and conservation of energy resources. For purposes of deciding the petition, this allegation has not been reviewed on its merits. A review of the petition shows that all of the requirements set forth in MPEP § 708.02(VI) have been satisfied.

Accordingly, the examiner will treat this application as special throughout its prosecution. Prior to the next action on the merits, the examiner will conduct a rigorous search for potentially interfering applications. The interference search will be brought up to date prior to each successive action.

The Supervisory Patent Examiner of Patent Examining Art Unit 3744 is being informed of this decision, and will advise the examiner to take future action consistent therewith.

PETITION GRANTED.

Stephen Marcus, Special Program Examiner,
Technology Center 3700

AKERMAN SENTERFITT
P.O. BOX 3188
WEST PALM BEACH FL 33402-3188

UNITED STATES PATENT AND TRADEMARK OFFICE

COMMISSIONER FOR PATENTS
UNITED STATES PATENT AND TRADEMARK OFFICE
P.O. BOX 1450
ALEXANDRIA, VA 22313-1450
www.uspto.gov

COPY MAILED

SEP 10 2007

OFFICE OF PETITIONS

THE INVENTORS NETWORK, INC.
332 ACADEMY STREET
CARNEGIE PA 15106

In re Application of	:
Yoder	: DECISION ON PETITION
Application No. 10/856,523	:
Filed: June 1, 2004	:
For: LIQUID ANIMAL HOOF	:
CONDITIONER	:

This decision is in response to the petition to withdraw the holding of abandonment under 37 CFR 1.181 filed June 27, 2007.

The petition under 37 CFR 1.181 to withdraw the holding of abandonment is hereby **GRANTED**.

This application was held abandoned March 1, 2007 for failure to timely submit a proper reply to the final Office action mailed November 29, 2006. The non-final Office action set a three month shortened statutory period of time for reply. Notice of Abandonment was mailed June 20, 2007.

Petitioner argues that a proper response to the final Office action was timely submitted February 27, 2007.

Review of Office records reveals that the response was received at the USPTO on February 27, 2007, while intended for instant application, did not include the correct application serial number. The response improperly cited U.S. App. No. 10/856,**253**. As a result of applicants' error, the application was held abandoned.

It is also noted that the instant petition bore the incorrect application number.

Correspondence directed to the Patent and Trademark Office concerning a previously filed application for a patent must identify the application number and filing date assigned to that application by the Office. See, 37 CFR 1.5(a). In the above-referenced application, applicant failed to correctly identify the application by citing an incorrect application number in the

response. The Office elects, in this instance, to treat applicant's error as a correctable minor error as permitted under MPEP 502. However, applicant is reminded that minor errors, such as occurred in the instant application, are to be avoided in the future by the careful review of correspondence prior to submission to the Office.

In view of the evidence thereof, the petition to withdraw the holding of abandonment is hereby **GRANTED**.

The Notice of Abandonment is hereby **VACATED** and the holding of abandonment is **WITHDRAWN**.

This application is being forwarded to Technology Center 1600 for further processing.

Telephone inquiries concerning this matter may be directed to the undersigned at (571) 272-3205.

Alesia M. Brown
Petitions Attorney
Office of Petitions

UNITED STATES PATENT AND TRADEMARK OFFICE

Commissioner for Patents
United States Patent and Trademark Office
P.O. Box 1450
Alexandria, VA 22313-1450
www.uspto.gov

MAY 17 2005

THE LAW OFFICE OF RICHARD S ERBE
P.O. BOX 418
5380 SENECA PLACE
SIMI VALLEY, CA 93062

In re application of	:	**DECISION ON PETITION**
Earl Kaufman	:	**TO MAKE SPECIAL**
Application No. 10/856,525	:	**(APPLICANT'S AGE)**
Filed: May 28, 2004	:	
For: BUSINESS METHOD FOR PROVIDING ADVERTISING INFORMATION ON POINT-OF-SALE PRODUCT PACKAGING		

This is a decision on the petition submitted on April 11, 2005 under 37 CFR 1.102 (c) to make the above-identified application special under the accelerated examination procedure set forth in MPEP 708.02, Section IV: Applicant's Age.

The petition is **GRANTED**.

An application may be accorded special status upon the filing of a petition providing evidence showing that the applicant is at least 65 years old. Such a showing may be provided by evidence such as a birth certificate or a statement from the applicant.

The evidence submitted with the petition is a signed declaration indicating Mr. Kaufman is at least 65 years of age.

The examiner is directed (1) to make an interference search for possible interfering applications, (2) to promptly examine this application out of turn, and (3) if any interfering application is discovered, to examine such application simultaneously and state in the first official letter of such application that it is being taken out of turn because of a possible interference.

Petitioner is advised that this application will continue to be special, throughout its entire prosecution and pendency, including interference or appeal, if any, only if petitioner makes a prompt ***bona fide*** effort, in response to each Office action, to place the application in condition for allowance, even if it is necessary to conduct an interview with the examiner to accomplish this purpose.

SUMMARY: Petition to Make Special **GRANTED**.

Kenneth J. Dorner
Special Programs Examiner
Technology Center 3600
(703) 308-0866

KJD/slb: 04/27/05

UNITED STATES PATENT AND TRADEMARK OFFICE

Commissioner for Patents
United States Patent and Trademark Office
P.O. Box 1450
Alexandria, VA 22313-1450
www.uspto.gov

ERIC R. PATTEN
507 GREENRIDGE
LONGVIEW, TX 75605

COPY MAILED

JUN 0 9 2005

OFFICE OF PETITIONS

In re Application of	:	
Eric Russell Patten	:	
Application No. 10/856,552	:	ON PETITION
Filed: May 27, 2004	:	
Attorney Docket No.	:	

This is a decision on the petition under 37 CFR 1.137(b), filed April 26, 2005, to revive the above-identified application.

The petition is **GRANTED**.

The above-identified application became abandoned for failure to reply in a timely manner to the Notice to File Corrected Application Papers (Notice) mailed July 27, 2004. The Notice set a period for reply of two (2) months from the mail date of the Notice. No extensions of time under the provisions of 37 CFR 1.136(a) were obtained. Accordingly, the above-identified application became abandoned on September 28, 2004.

37 CFR 1.137(b)(3) requires a statement that the entire delay in filing the required reply from the due date for the reply until the filing of a grantable petition pursuant to 37 CFR 1.137(b) was unintentional. Since the statement contained in the instant petition varies from the language required by 37 CFR 1.137(b)(3), the statement contained in the instant petition is being construed as the statement required by 37 CFR 1.137(b)(3) and petitioner must notify the Office if this is **not** a correct interpretation of the statement contained in the instant petition.

Telephone inquiries concerning this decision should be directed to Irvin Dingle at (571) 272-3210.

This matter is being referred to the Initial Patent Examination Unit.

Irvin Dingle
Petitions Examiner
Office of Petitions
Office of the Deputy Commissioner
for Patent Examination Policy

UNITED STATES PATENT AND TRADEMARK OFFICE

Commissioner for Patents
United States Patent and Trademark Office
P.O. Box 1450
Alexandria, VA 22313-1450
www.uspto.gov

PROCOPIO, CORY, HARGREAVES & SAVICH, LLP
530 B Street, Suite 2100
San Diego, CA 92101-4469

COPY MAILED

AUG 0 1 2006

OFFICE OF PETITIONS

In re Application of	:	
Richard Cheng Lee	:	
Application No. 10/856,571	:	DECISION ON PETITION
Filed: September 2, 2005	:	TO WITHDRAW
Attorney Docket No. 1395-PA01	:	FROM RECORD
	:	

This is a decision on the Request to Withdraw as attorney or agent of record under 37 C.F.R. § 1.36(b), filed September 02, 2005

The request is **NOT APPROVED**.

A grantable request to withdraw as attorney/agent of record must be signed by every attorney/agent seeking to withdraw or contain a clear indication that one attorney is signing on behalf of another/others. A request to withdraw will not be approved unless at least 30 (thirty) days would remain between the date of approval and the later of the expiration date of a time to file a response or the expiration date of the maximum time period which can be extended under 37 C.F.R. § 1.136(a).

The request cannot be approved because The Office cannot approve the request at this time since the reasons provided do not meet any of the conditions under the mandatory or permissive categories enumerated in 37 CFR 10.40. Section 10.40 of Title 37 of the Code of Federal Regulation states, "[a] practitioner shall not withdraw from employment in a proceeding before the Office without permission from the Office[.]" More specifically, 37 CFR 10.40 states, "[i]f paragraph (b) of this section is not applicable, a practitioner may not request permission to withdraw in matter pending before the Office unless such request or such withdrawal is" for one the permissive reasons listed in 37 CFR 10.40(c). The reasons set forth in the request, do not meet any the conditions set forth in 37 CFR 10.40.

All future communications from the Office will be directed to the below listed address from the change of address filed March 15, 2005 until otherwise notified by applicant.

There is an outstanding office action mailed June 27, 2006 that requires a reply from applicant.

Telephone inquiries concerning this decision should be directed to Charles Smoot 571-272-3299.

David Bucci
Petitions Examiner
Office of Petitions

cc: Gary Eastman
707 Broadway, Suite 1800
San Diego, CA 92101

UNITED STATES PATENT AND TRADEMARK OFFICE

Commissioner for Patents
United States Patent and Trademark Office
P.O. Box 1450
Alexandria, VA 22313-1450
www.uspto.gov

PROCOPIO, CORY, HARGREAVES & SAVITCH LLP
530 B STREET
SUITE 2100
SAN DIEGO, CA 92101

COPY MAILED
JUN 23 2008

In re Application of	:	
Richard Cheng LEE	:	
Application No. 10/856,571	:	DECISION ON PETITION
Filed: May 28, 2004	:	
Attorney Docket No. 115464-001UTL	:	

This is a decision on the renewed petition under the unintentional provisions of 37 CFR 1.137(b), filed April 10, 2008, to revive the above-identified application.

The petition is **GRANTED**.

The application became abandoned for failure to reply in a timely manner to the non-final Office action mailed, January 22, 2007, which set a shortened statutory period for reply of three (3) months. No extensions of time under the provisions of 37 CFR 1.136(a) were obtained. Accordingly, the application became abandoned on April 24, 2007.

The petition satisfies the requirements of 37 CFR 1.137(b) in that petitioner has supplied (1) the reply in the form of an amendment; (2) the petition fee of $770.00; and (3) a proper statement of unintentional delay. Accordingly, the reply to the non-final Office action of January 22, 2007 is accepted as having been unintentionally delayed.

The revocation of power of attorney filed by the applicant/inventor with the petition on April 10, 2008 has been accepted and made of record.

It is not apparent whether the person signing the statement of unintentional delay was in a position to have firsthand or direct knowledge of the facts and circumstances of the delay at issue. Nevertheless, such statement is being treated as having been made as the result of a reasonable inquiry into the facts and circumstances of such delay. See 37 CFR 10.18(b) and Changes to Patent Practice and Procedure; Final Rule Notice, 62 Fed. Reg. 53131, 53178 (October 10, 1997), 1203 Off. Gaz. Pat. Office 63, 103 (October 21, 1997). In the event that such an inquiry has not been made, petitioner must make such an inquiry. If such inquiry results in the discovery that it is not correct that the entire delay in filing the required reply from the due date for the reply until the filing of a grantable petition pursuant to 37 CFR 1.137(b) was unintentional, petitioner must notify the Office.

The application file is being referred to Technology Center AU 3618 for appropriate action on the concurrently filed amendment.

Telephone inquiries concerning this decision should be directed to the undersigned at (571) 272-4231.

Michelle R. Eason

Michelle R. Eason
Paralegal Specialist
Office of Petitions

UNITED STATES PATENT AND TRADEMARK OFFICE

Commissioner for Patents
United States Patent and Trademark Office
P.O. Box 1450
Alexandria, VA 22313-1450
www.uspto.gov

Han-Yi Lee
Bayshore Patent Group, LLC
520 Chantecler Drive
Fremont, C 94539

COPY MAILED

AUG 14 2006

OFFICE OF PETITIONS

In re Application of	:	
Shao-Tsu Kung	:	
Application No. 10/856,582	:	DECISION ON PETITION
Filed: May 28, 2004	:	TO WITHDRAW
Attorney Docket No. US 930021	:	FROM RECORD

This is a decision on the Request to Withdraw as attorney or agent of record under 37 C.F.R. § 1.36(b), filed March 17, 2006.

The request is **NOT APPROVED**.

A grantable request to withdraw as attorney/agent of record must be signed by every attorney/agent seeking to withdraw or contain a clear indication that one attorney is signing on behalf of another/others. A request to withdraw will not be approved unless at least 30 (thirty) days would remain between the date of approval and the later of the expiration date of a time to file a response or the expiration date of the maximum time period which can be extended under 37 C.F.R. § 1.136(a).

The request cannot be approved because no reasons for withdrawal have been provided. The Office cannot, at this time, determine whether practitioner's request is one of the mandatory or permissive reasons enumerated in 37 CFR 10.40. Any subsequent requests must include reasons for withdrawal. Please note that there is a space provided for on PTO/SB/83 (Request to Withdraw as Attorney or Agent) to supply practitioner's reasons.

All future communications from the Office will continue to be directed to the above-listed address until otherwise notified by applicant.

Telephone inquiries concerning this decision should be directed to Terri Williams at 571-272- 2991.

for David Bucci
Petitions Examiner
Office of Petitions

cc: RICH Patent and Trademark Office
10F-2, 164, Dun-Hwa South Road
2nd Section
Taipei, Taiwan 106

SPE RESPONSE FOR CERTIFICATE OF CORRECTION

Paper No.: _____

DATE : 5/19/07

TO SPE OF : ART UNIT 3662

SUBJECT : Request for Certificate of Correction on Patent No.: 7046191

A response is requested with respect to the accompanying request for a certificate of correction.

Please complete this form and return with file, within 7 days to:
Palm location **7580, Certificates of Correction Branch – South Tower – 9A22**
If response is for an IFW, **return to employee (named below) via PUBSCofC Team in MADRAS.**
With respect to the change(s) requested, correcting Office and/or Applicant's errors, should the patent read as shown in the certificate of correction (COCIN)? No new matter should be introduced, nor should the scope or meaning of the claims be changed.

Valerie Jackson

Thank You For Your Assistance

Certificates of Correction Branch
Tel. No. 703-308-9390 ext. 114

The request for issuing the above-identified correction(s) is hereby:
Note your decision on the appropriate box.

- ☒ **Approved** — All changes apply.
- ☐ **Approved in Part** — Specify below which changes **do not** apply.
- ☐ **Denied** — State the reasons for denial below.

Comments:

Thomas A. Dorsey
SPE

3662
Art Unit

UNITED STATES PATENT AND TRADEMARK OFFICE

UNITED STATES DEPARTMENT OF COMMERCE
United States Patent and Trademark Office
Address: COMMISSIONER FOR PATENTS
P.O. Box 1450
Alexandria, Virginia 22313-1450
www.uspto.gov

Novak Druce + Quigg LLP
CityPlace Tower, 525 Okeechobee Blvd.
Fifteenth-Floor
WEST PALM BEACH, FL 33401

Mail Date: 04/21/2010

Applicant	: David J. Allard	: DECISION ON REQUEST FOR
Patent Number	: 7657383	: RECALCULATION of PATENT
Issue Date	: 02/02/2010	: TERM ADJUSTMENT IN VIEW
Appliction No	: 10/856,600	: OF WYETH AND NOTICE OF INTENT TO
Filed	: 05/28/2004	: ISSUE CERTIFICATE OF CORRECTION
		:

The Request for Recalculation is **GRANTED** to the extent indicated.

The patent term adjustment has been determined to be **542** days. The USPTO will *sua sponte* issue a certificate of correction reflecting the amount of PTA days determined by the recalculation.

Prior to the issuance of the certificate of correction, the USPTO will afford patentee an opportunity to be heard and request reconsideration. Accordingly, patentee has **one month or thirty (30) days**, whichever is longer, to file a request for reconsideration of this patent term adjustment calculation. See 35 U.S.C. 154(b)(3)(B)(ii) and 37 CFR 1.322(a)(4). No extensions of time will be granted under 37 CFR 1.136.

Patentee should use document code PET.OP if electronically filing a request for reconsideration of this patent term adjustment calculation. The patentee must also include the information required by 37 CFR 1.705(b)(2) and the fee required by 37 CFR 1.18(e). If patentee does not file a timely request for reconsideration of this patent term adjustment calculation including the information required by 37 CFR 1.705(b)(2) and the fee required by 37 CFR 1.18(e), the USPTO will issue a certificate of correction reflecting the PTA determination noted above.

Patentee should be aware that in order to preserve the right to review in the United States District Court for the District of Columbia of the USPTO patent term adjustment determination, patentee must ensure that he or she also take the steps required under 35 U.S.C. 154(b)(4)(A) in a timely manner. Nothing in the request for recalculation should be construed as providing an alternative time frame for commencing a civil action under 35 U.S.C. 154(b)(4)(A).

Any questions concerning this decision should be directed to the Office of Patent Legal Administration at 571-272-7702.

UNITED STATES PATENT AND TRADEMARK OFFICE

Commissioner for Patents
United States Patent and Trademark Office
P.O. Box 1450
Alexandria, VA 22313-1450
www.uspto.gov

Isaac A. Angres
Suite 301
2001 Jefferson Davis Highway
Arlington VA 22202

COPY MAILED

SEP 13 2006

OFFICE OF PETITIONS

In re Application of
MICHNICK et al.
Application No. 10/856,620
Filed: May 29, 2004
Attorney Docket No. Oddy 008

DECISION ON PETITION
UNDER 37 CFR 1.78(a)(3)

This is a decision on the petition under 37 CFR 1.78(a)(3), filed June 1, 2006, to accept an unintentionally delayed claim under 35 U.S.C. § 120 for the benefit of priority to the prior-filed nonprovisional applications set forth in the amendment filed January 24, 2006 and June 1, 2006.

The petition is **DISMISSED.**

A petition for acceptance of a claim for late priority under 37 CFR 1.78(a)(3) is only applicable to those applications filed on or after November 29, 2000. Further, the petition is appropriate only after the expiration of the period specified in 37 CFR 1.78(a)(2)(ii). In addition, the petition under 37 CFR 1.78(a)(3) must be accompanied by:

(1) the reference required by 35 U.S.C. § 120 and 37 CFR 1.78(a)(2)(i) of the prior-filed application(s), unless previously submitted;
(2) the surcharge set forth in § 1.17(t); and
(3) a statement that the entire delay between the date the claim was due under 37 CFR 1.78(a)(2)(ii) and the date the claim was filed was unintentional. The Director may require additional information where there is a question whether the delay was unintentional.

The petition does not satisfy item (1) above.

The reference to add the above-noted, prior-filed applications on page one following the first sentence of the specification is not acceptable as drafted since it improperly incorporates by reference the prior-filed applications. Petitioner's attention is directed to Dart Industries v. Banner, 636 F.2d 684, 207 USPQ 273 (C.A.D.C. 1980), where the court drew a distinction between a permissible 35 U.S.C. § 120 statement and the impermissible introduction of new matter by way of incorporation by reference in a 35 U.S.C. § 120 statement. The court specifically stated:

> Section 120 merely provides a mechanism whereby an application becomes entitled to benefit of the filing date of an earlier application disclosing the same subject matter. Common subject matter must be disclosed, in both applications, either specifically or by an express incorporation-by-reference of prior disclosed subject matter. Nothing in section 120 itself operates to carry forward any disclosure from an earlier application. In re deSeversky, supra at 674, 177 USPQ at 146-147. Section 120 contains no magical disclosure-augmenting

> powers able to pierce new matter barriers. It cannot, therefore, "limit" the absolute and express prohibition against new matter contained in section 251.

In order for the incorporation by reference statement to be effective as a proper safeguard against the omission of a portion of a prior application, the incorporation by reference statement must be included in the specification-as-filed, or in an amendment specifically referred to in an oath or declaration executing the application. *See* In re deSeversky, *supra*. *Note also* MPEP 201.06(c)(IV). An incorporation by reference for the late-benefit claimed applications was not included in the specification-as-filed.

Additionally, consideration of the late priority claim in the amendment would require the examiner to perform an additional search and/or would require additional examiner consideration. At this stage of prosecution when prosecution is closed, a condition of accepting a claim for late priority under 37 CFR 1.78(a)(3) must include a Request for Continued Examination (RCE).

Before the petition under 37 CFR §§ 1.78(a)(3) can be granted, a renewed petition with a RCE and a substitute amendment or an Application Data Sheet (complying with the provisions of 37 CFR 1.121 and 37 CFR 1.76(b)(5)) to correct the above matters are required.

Further correspondence with respect to this matter should be addressed as follows:

By mail: Mail Stop PETITIONS
Commissioner for Patents
Post Office Box 1450
Alexandria, VA 22313-1450

By hand: Customer Service Window
Mail Stop Petitions
Randolph Building
401 Dulany Street
Alexandria, VA 22314

By fax: (571) 273-8300
ATTN: Office of Petitions

Any questions concerning this matter may be directed to Denise Pothier at (571) 272-4787.

Frances Hicks

Frances Hicks
Petitions Examiner
Office of Petitions

UNITED STATES PATENT AND TRADEMARK OFFICE

Commissioner for Patents
United States Patent and Trademark Office
P.O. Box 1450
Alexandria, VA 22313-1450
www.uspto.gov

Patent No. : 7,380,943 B2
Serial No. : 10/856,623
Inventor(s) : Koschmieder et al.
Issued : January 3, 2008
Title : METHOD AND ARRANGEMENT FOR DETERMINING THE ADJUSTED MAGNIFICATION STEP IN OPHTHALMOLOGIC INSTRUMENTS, PARTICULARLY SLIT LAMPS
Docket No. : GK-ZEI-3229/500343.20243

Re: Request for Reconsideration

Consideration has been given your request for the issuance of a certificate of correction for the above-identified patent under the provisions of 37 CFR 1.322 and/or 1.323.

A petition under 37 CFR 3.81 must be filed and granted to fulfill your request, to date, there is no petition on record to consider your request.

Furthermore, Assignees' and/ or Co-assignees' names and addresses (assignment data) printed in a patent are based *solely* on information supplied in the appropriate space for identifying the assignment data, i.e., item 3 of the Fee(s) Transmittal Form PTOL-85B. After payment of the issue fee, correction of assignment data submitted on the PTOL-85B can only be done by Certificate of Correction under 37 CFR 1.323, which requires petition under 37 CFR 3.81(b).

A request for a patent to be corrected to state the name of the assignee must:

A. state that the assignment was submitted for recordation as set forth in 37 CFR 3.11 before issuance of the patent;
B. include a request for a certificate of correction under 37 CFR 1.323 along with the fee set forth in 37 CFR 1.20(a); and
C. include the processing fee set forth in 37 CFR 1.17(i).

If the request is granted, Certificates of Correction Branch will be notified that a Certificate of Correction may be issued.
See Manual of Patent Examining Procedure, Section 1481.01 (Rev. 3) (Oct. 2005).

Applicant has not included items B and or C above, accordingly, the request for Certificate of Correction to add or change the assignee data is dismissed.
Any request under 37 CFR 3.81(b) should be directed to the following address or facsimile number:

By mail: Mail Stop PETITIONS
Commissioner for Patents
Post Office Box 1450

Alexandria, VA 22313-1450

By hand: Customer Service Window
Mail Stop Petitions
Randolph Building
401 Dulany Street
Alexandria, VA 22314

By fax: 571-273-8300 ATTN: Office of Petitions

If, the petition under 37 CFR 1.182 (required fee currently $130), is filed and granted, the patentee would be entitled to a certificate of correction under 37 CFR 1.323 (required fee currently $100), which has been received.

Ernest C. White, *LIE*
For Mary F. Diggs (703) 308-9390 x 125
Decisions & Certificates
of Correction Branch
(703) **308-9390 x 122**

REED SMITH, LLP
ATTN: PATENT RECORDS DEPARTMENT
599 LEXINGTON AVENUE, 29TH FLOOR
NEW YORK NY 10022-7650

ecw

UNITED STATES PATENT AND TRADEMARK OFFICE

COMMISSIONER FOR PATENTS
UNITED STATES PATENT AND TRADEMARK OFFICE
P.O. BOX 1450
ALEXANDRIA, VA 22313-1450
www.uspto.gov

JJGJR.: 11-04

Paper No: __

COPY MAILED

NOV 2 3 2004

OFFICE OF PETITIONS

SHELDON & MAK, INC
225 SOUTH LAKE AVENUE
9TH FLOOR
PASADENA CA 91101

In re Application of
Bull
Application No. 10/856,636
Filing Date: 27 May, 2004
Attorney Docket No. 14478

DECISION ON PETITION

This is a decision on the petition filed on 14 September, 2004, and considered under 37 C.F.R. §1.53, to obtain a filing date of 27 May, 2004, for Figure 1, as describe in the specification of the application.

The petition is **GRANTED**.

BACKGROUND

This nonprovisional application was deposited on 27 May, 2004.

On 26 July, 2004, the Office mailed a "Notice of Incomplete Nonprovisional Application," (the 26 July Notice) and indicated, *inter alia*, that "Figure(s) 19 and 20 as described in the specification" appeared to be missing on deposit of the application.

The 26 July Notice further informed Petitioner that, should he contend that the missing figure was deposited with the rest of the application at the time of filing, he could petition and make a showing to that effect, or he could accept the application as filed, or could submit the missing figure and accept the date of that submission as the date of filing.

The petition filed on 14 September, 2004, states that it is accompanied, *inter alia*, by a date-stamped ("052704") receipt card itemizing the contents of the application received by the Office and copies of Figures 19 and 20 as described in the specification.

ANALYSIS

A review of the record reveals that:

- the instant application was deposited with the Office on 27 May, 2004; and
- the receipt card (see: MPEP §503[1]) is date stamped and provides, *inter alia*:

* * *

20 Sheets of Figures (Figures 1-20)

* * *

The record further discloses that the drawing sheets that the Office acknowledges receiving are sequentially numbered, e.g., "1/20," "2/20" . . . "18/20," and there are no duplicate sheets/figures.

---

[1] MPEP §503 provides in pertinent part:

§503 Application Number and Filing Receipt

* * *

A return postcard should be attached to *each* patent application for which a receipt is desired. It is important that the return postcard itemize all of the components of the application. If the postcard does not itemize each of the components of the application, it will not serve as evidence that any component which was not itemized was received by the United States Patent and Trademark Office (USPTO). It should be recognized that the identification of an application by application number does not necessarily signify that the USPTO has accepted the application as complete (37 C.F.R. §1.53(a)).

* * *

RETURN POSTCARD

If a receipt of any item (e.g., paper or fee) filed in the USPTO is desired, it may be obtained by enclosing with the paper a self-addressed postcard specifically identifying the item. The USPTO will stamp the receipt date on the postcard and place it in the outgoing mail. A postcard receipt which itemizes and properly identifies the items which are being filed serves as *prima facie* evidence of receipt in the USPTO of all the items listed thereon on the date stamped thereon by the USPTO.

The identifying data on the postcard should be so complete as to clearly identify the item for which receipt is requested. For example, the postcard should identify the applicant's name, application number (if known), confirmation number (if known), filing date, interference number, title of the invention, etc. The postcard should also identify the type of paper being filed, e.g., new application, affidavit, amendment, notice of appeal, appeal brief, drawings, fees, motions, supplemental oath or declaration, petition, etc., and the number of pages being submitted. If a new application is being filed, all parts of the application being submitted should be separately listed on the postcard, e.g., the number of pages of specification (including written description, claims and abstract), number of claims, number of sheets of drawings, number of pages of oath/declaration, number of pages of cover sheet (provisional application).

The postcard receipt will not serve as *prima facie* evidence of receipt of any item which is not adequately itemized on the postcard. For example, merely listing on the postcard "a complete application" or "patent application" will not serve as a proper receipt for each of the required components of an application (e.g., specification (including claims), drawings (if necessary), oath or declaration and the application filing fee) or missing portions (e.g., pages, sheets of drawings) of an application if one of the components or portion of a component is found to be missing by the USPTO. Each separate component should be specifically and properly itemized on the postcard. Furthermore, merely incorporating by reference in the postcard receipt, the items listed in a transmittal letter will not serve as *prima facie* evidence of receipt of those items.

The person receiving the item(s) in the USPTO will check the listing on the postcard against the item(s) being filed to be sure they are properly identified and that all the items listed on the postcard are presently being submitted to the USPTO. If any of the items listed on the postcard are not being submitted to the USPTO, those items will be crossed off and the post-card initialed by the person receiving the items. Upon return of a postcard receipt from the USPTO, the postcard receipt should be promptly reviewed by the person who filed the items to ensure that every item specifically denoted on the postcard was received by the USPTO. If the postcard receipt has been annotated to indicate that a particular item denoted on the postcard was not received by the USPTO, the postcard receipt will not serve as *prima facie* evidence of receipt of that item in the USPTO. (Emphasis supplied.)

Because the return postcard receipt properly itemizes the contents of the application package in accordance with MPEP §503, the Office concludes that the Figure(s) 19 and 20 as described in the specification were submitted on 27 May, 2004, and subsequently was misplaced in the Office.

Accordingly, the petition under 37 C.F.R. §1.53 is **granted**; the petition fee is waived and credited to Deposit Account 19-2090; and the Notice mailed on 26 July, 2004, hereby is withdrawn as to Figure(s) 19 and 20 as described in the specification.

This application is released to the Office of Initial Patent Examination for further processing with a filing date of 27 May, 2004, for the entire application and in particular for Figure(s) 19 and 20 as described in the specification using:

- pages 1 - 48 (Specification, Claims, Abstract, and 18 sheets of drawings (Fig(s). 1 - 18) deposited on 27 May, 2004; and
- Fig(s). 19 and 20 as described in the specification, deposited on 14 September, 2004;
- with direction to OIPE to correct Office records to reflect that 48 pages of specification (description, claims and abstract) and 20 sheets of drawings were present on filing on 27 May, 2004, and forward to Petitioner a corrected filing receipt setting forth a filing date of 27 May, 2004, reflecting therein that 48 pages of specification (description, claims and abstract) and 20 sheets of drawings were present on filing.

Thereafter, the application will be considered by the examiner in due course.

Telephone inquiries concerning this decision may be directed to the undersigned at (571) 272-3214.

John J. Gillon, Jr.
Senior Attorney
Office of Petitions

UNITED STATES PATENT AND TRADEMARK OFFICE

Commissioner for Patents
United States Patent and Trademark Office
P.O. Box 1450
Alexandria, VA 22313-1450
www.uspto.gov

WORKMAN NYDEGGER/MICROSOFT
1000 EAGLE GATE TOWER
60 EAST SOUTH TEMPLE
SALT LAKE CITY UT 84111

COPY MAILED

JUL 12 2007

OFFICE OF PETITIONS

In re Application of	:	
Beat Stamm et al	:	
Application No. 10/856,641	:	DECISION GRANTING PETITION
Filed: May 28, 2004	:	UNDER 37 CFR 1.137(b)
Attorney Docket No. 14984.40	:	

This is a decision on the petition under 37 CFR 1.137(b), filed February 13, 2007, to revive the above-identified application.

The petition is **GRANTED**.

The petition satisfies the conditions for revival pursuant to the provisions of 37 CFR 1.137(b) in that (1) the reply in the form of annotated and replacement drawing sheets; (2) the petition fee; and (3) the required statement of unintentional delay have been received. Accordingly, the reply to the Notice of Allowability of September 21, 2006, is accepted as having been unintentionally delayed.

Telephone inquiries concerning this decision should be directed to the undersigned at (571) 272-3208.

This matter is being referred to Patent Publishing and for review of the drawing sheets submitted on February 13, 2007.

Karen Creasy

Karen Creasy
Petitions Examiner
Office of Petitions

UNITED STATES PATENT AND TRADEMARK OFFICE

Commissioner for Patents
United States Patent and Trademark Office
P.O. Box 1450
Alexandria, VA 22313-1450
www.uspto.gov

May 21, 2008

Jules E. Goldberg
REED SMITH LLP
599 Lexington Avenue
New York, NY 10022-7650

Patent No.: 7,115,195 B2
Application No.: 10/856,650
Inventor(s): Terashima, et al.
Issued: October 3, 2006
Title: **ION SELECTIVE MONOELECTRODE COMPLEX**

Re: Request for Certificate of Correction

Consideration has been given your request for the issuance of a certificate of correction for the above-identified patent under the provisions of Rule(s) 1.322 and/or 1.323.

Assignees' names and addresses (assignment data) printed in a patent, are based *solely* on information supplied in the appropriate space for identifying the assignment data, i.e., item 3 of the Issue Fee Transmittal Form PTOL-85B. Granting of a request under 37 CFR 3.81(b) is required to correct applicant's error providing ***incorrect or erroneous*** assignment data, *before* issuance of a Certificate of Correction, under 37 CFR 1.323 *(see Manual of Patent Examining Procedures (M.P.E.P) Chp.1400, sect. 1481).* This procedure is required *at any time after the issue fee is paid*, including after issuance of the patent.

In view of the foregoing, your request, in this matter, is hereby denied.

A request to correct the Assignee under 37 CFR 3.81(b) should include:

A. **the processing fee set forth in 37 CFR 1.117(h) (currently $130);**
B. a statement that the failure to include the correct assignee name on the PTOL-85B was inadvertent; and
C. a copy of the Notice of Recordation of Assignment Document, reflecting the reel and frame number where the assignment(s) is recorded and/or reflecting proof of *the date* the assignment was submitted for recordation.

In the Request, Applicant(s) may request that the file be forwarded to Certificates of Correction Branch, for issuance of a Certificate of Correction, if the Request is granted.

Any request under 37 CFR 3.81(b) should be directed to the following address or facsimile number:

By mail:	Mail Stop PETITIONS Commissioner for Patents Post Office Box 1450 Alexandria, VA 22313-1450
By hand:	Customer Service Window Mail Stop Petitions Randolph Building 401 Dulany Street Alexandria, VA 22314
By fax:	(571) 273-0025 ATTN: Office of Petitions

If a fee (currently $100) was previously submitted for consideration of a Request for Certificate of Correction, under CFR 1.323, to correct assignment data, no additional fee is required.

Virginia Tolbert
For Mary Diggs, Supervisor
Decisions & Certificate of Correction Branch
(703) 305-8309 or (703) **308-9390 ext 113**

vt

UNITED STATES PATENT AND TRADEMARK OFFICE

Commissioner for Patents
United States Patent and Trademark Office
P.O. Box 1450
Alexandria, VA 22313-1450
www.uspto.gov

DUANE MORRIS LLP – NY
PATENT DEPARTMENT
1540 BROADWAY
NEW YORK, NY 10036-4086

COPY MAILED

DEC 1 0 2008

OFFICE OF PETITIONS

In re Patent No. 7,115,195	:	
Issue Date: October 3, 2006	:	
Application No. 10/856,650	:	ON PETITION
Filed: May 27, 2004	:	
Attorney Docket No. JG-YY-5111D	:	

This is a decision on the petition filed October 13, 2008, which is being treated as a petition under 37 CFR 3.81(b)[1] to correct the assignee's data on the front page of the above-identified patent by way of a Certificate of Correction.

The petition is **granted.**

Telephone inquiries concerning this matter may be directed to the undersigned at (571) 272-3210. Any questions concerning the issuance of the Certificate of Correction should be directed to the Certificates of Correction Branch at (703) 305-8309.

This application is being forwarded to the Certificates of Correction Branch for issuance of the requested Certificate of Correction.

Irvin Dingle
Petitions Examiner
Office of Petitions

[1] See Official Gazette of June 22, 2004

UNITED STATES PATENT AND TRADEMARK OFFICE

UNITED STATES DEPARTMENT OF COMMERCE
United States Patent and Trademark Office
Address: COMMISSIONER FOR PATENTS
P.O. Box 1450
Alexandria, Virginia 22313-1450
www.uspto.gov

KATTEN MUCHIN ROSENMAN LLP
575 MADISON AVENUE
NEW YORK, NY 10022-2585

Mail Date: 04/21/2010

Applicant	: Kazuyuki Inomoto	: DECISION ON REQUEST FOR
Patent Number	: 7613839	: RECALCULATION of PATENT
Issue Date	: 11/03/2009	: TERM ADJUSTMENT IN VIEW
Appliction No	: 10/856,653	: OF WYETH AND NOTICE OF INTENT TO
Filed	: 05/28/2004	: ISSUE CERTIFICATE OF CORRECTION
		:

The Request for Recalculation is **GRANTED** to the extent indicated.

The patent term adjustment has been determined to be **1524** days. The USPTO will *sua sponte* issue a certificate of correction reflecting the amount of PTA days determined by the recalculation.

Prior to the issuance of the certificate of correction, the USPTO will afford patentee an opportunity to be heard and request reconsideration. Accordingly, patentee has **one month or thirty (30) days**, whichever is longer, to file a request for reconsideration of this patent term adjustment calculation. See 35 U.S.C. 154(b)(3)(B)(ii) and 37 CFR 1.322(a)(4). No extensions of time will be granted under 37 CFR 1.136.

Patentee should use document code PET.OP if electronically filing a request for reconsideration of this patent term adjustment calculation. The patentee must also include the information required by 37 CFR 1.705(b)(2) and the fee required by 37 CFR 1.18(e). If patentee does not file a timely request for reconsideration of this patent term adjustment calculation including the information required by 37 CFR 1.705(b)(2) and the fee required by 37 CFR 1.18(e), the USPTO will issue a certificate of correction reflecting the PTA determination noted above.

Patentee should be aware that in order to preserve the right to review in the United States District Court for the District of Columbia of the USPTO patent term adjustment determination, patentee must ensure that he or she also take the steps required under 35 U.S.C. 154(b)(4)(A) in a timely manner. Nothing in the request for recalculation should be construed as providing an alternative time frame for commencing a civil action under 35 U.S.C. 154(b)(4)(A).

Any questions concerning this decision should be directed to the Office of Patent Legal Administration at 571-272-7702.

UNITED STATES PATENT AND TRADEMARK OFFICE

Commissioner for Patents
United States Patent and Trademark Office
P.O. Box 1450
Alexandria, VA 22313-1450
www.uspto.gov

RADER, FISHMAN & GRAUER PLLC
39533 WOODWARD AVENUE
SUITE 140
BLOOMFIELD HILLS MI 48304-0610

COPY MAILED

FEB 11 2005

OFFICE OF PETITIONS

In re Application of
Gregory Alan Haunhorst et al.
Application No. 10/856,671
Filed: May 28, 2004
Attorney Docket No. 65857-0131

: ON PETITION

This is in response to the petition filed September 29, 2004, under 37 CFR 1.53, requesting corrected priority data.

The petition is **DISMISSED** as involving moot issues.

Petitioners state that the filing receipt received for the above-identified application incorrectly identified the filing date of provisional Application No. 60/520,744, the benefit under 35 U.S.C. § 119(e) of which is claimed in the present application, as February 13, 2004, rather than November 17, 2003.[1]

The petition is dismissed because no petition is necessary to effect the requested change. The present request will be treated as a request for a Corrected Filing Receipt. Accordingly, no petition fees are due and none will be charged.

This matter is being referred to the Office of Initial Patent Examination for correction of the PALM bib data records, for issuance of a Corrected Filing Receipt and for further pre-examination processing.

Telephone inquiries concerning this matter may be directed to the undersigned Petitions Attorney at (571) 272-3212.

Patricia Faison-Ball

Patricia Faison-Ball
Senior Petitions Attorney
Office of Petitions

---

[1]A filing date petition in 60/520,744 was granted in a decision mailed September 23, 2004 correcting the filing date from February 13, 2004 to November 17, 2003.

UNITED STATES PATENT AND TRADEMARK OFFICE

Commissioner for Patents
United States Patent and Trademark Office
P.O. Box 1450
Alexandria, VA 22313-1450
www.uspto.gov

WORKMAN NYDEGGER
1000 EAGLE GATE TOWER
60 EAST SOUTH TEMPLE
SALT LAKE CITY, UT 84111

COPY MAILED
DEC 03 2008

In re Application of	:	
Scott R. Watterson, et al.	:	
Application No. 10/856,676	:	DECISION GRANTING PETITION
Filed: May 28, 2004	:	UNDER 37 CFR 1.313(c)(2)
Attorney Docket No. 13914.579.4.1	:	

This is a decision on the petition under 37 CFR 1.313(c)(2), filed December 1, 2008, to withdraw the above-identified application from issue after payment of the issue fee.

The petition is **GRANTED**.

The above-identified application is withdrawn from issue for consideration of a submission under 37 CFR 1.114 (request for continued examination). *See* 37 CFR 1.313(c)(2).

Petitioner is advised that the issue fee paid on October 31, 2008 cannot be refunded. If, however, this application is again allowed, petitioner may request that it be applied towards the issue fee required by the new Notice of Allowance.[1]

Telephone inquiries regarding this decision should be directed to undersigned at (571) 272-1642.

This application is being referred to Technology Center AU 3764 for processing of the request for continued examination under 37 CFR 1.114 and for consideration of the concurrently filed information disclosure statement.

/AMW/
April M. Wise
Petitions Examiner
Office of Petitions

---

[1] *The request to apply the issue fee to the new Notice may be satisfied by completing and returning the new Part B – Fee(s) Transmittal Form (along with any balance due at the time of submission). Petitioner is advised that the Issue Fee Transmittal Form* ***must*** *be completed and timely submitted to avoid abandonment of the application.*

UNITED STATES PATENT AND TRADEMARK OFFICE

Commissioner for Patents
United States Patent and Trademark Office
P.O. Box 1450
Alexandria, VA 22313-1450
www.uspto.gov

WORKMAN NYDEGGER
1000 EAGLE GATE TOWER
60 EAST SOUTH TEMPLE
SALT LAKE CITY, UT 84111

MAILED

MAR 30 2009

OFFICE OF PETITIONS

In re Application of	:	
Scott R. Watterson, et al.	:	
Application No. 10/856,676	:	DECISION GRANTING PETITION
Filed: May 28, 2004	:	UNDER 37 CFR 1.313(c)(2)
Attorney Docket No. 13914.579.4.1	:	

This is a decision on the petition under 37 CFR 1.313(c)(2), filed March 27, 2009, to withdraw the above-identified application from issue after payment of the issue fee.

The petition is **GRANTED**.

The above-identified application is withdrawn from issue for consideration of a submission under 37 CFR 1.114 (request for continued examination). *See* 37 CFR 1.313(c)(2).

Petitioner is advised that the issue fee paid on February 17, 2009 cannot be refunded. If, however, this application is again allowed, petitioner may request that it be applied towards the issue fee required by the new Notice of Allowance.[1]

Telephone inquiries regarding this decision should be directed to undersigned at (571) 272-1642. All other inquiries regarding the examination or status of this application should be directed to the Technology Center.

This application is being referred to Technology Center AU 3764 for processing of the request for continued examination under 37 CFR 1.114 and for consideration of the concurrently filed amendment.

/AMW/
April M. Wise
Petitions Examiner
Office of Petitions

---

[1] *The request to apply the issue fee to the new Notice may be satisfied by completing and returning the new Part B – Fee(s) Transmittal Form (along with any balance due at the time of submission). Petitioner is advised that the Issue Fee Transmittal Form must be completed and timely submitted to avoid abandonment of the application.*

UNITED STATES PATENT AND TRADEMARK OFFICE

Commissioner for Patents
United States Patent and Trademark Office
P.O. Box 1450
Alexandria, VA 22313-1450
www.uspto.gov

WORKMAN NYDEGGER
1000 EAGLE GATE TOWER
60 EAST SOUTH TEMPLE
SALT LAKE CITY, UT 84111

MAILED

JUN 0 8 2009

OFFICE OF PETITIONS

In re Application of	:	
Scott R. Watterson, et al.	:	
Application No. 10/856,676	:	DECISION DISMISSING PETITIONS
Filed: May 28, 2004	:	UNDER 37 CFR 1.78(a)(3) AND (a)(6)
Attorney Docket No. 13914.579.4.1	:	

This is a decision on the petition under 37 CFR §§ 1.78(a)(3) and 1.78(a)(6), filed March 27, 2009 unintentionally delayed claim under 35 U.S.C. §§ 120 and 119(e) for the benefit of priority to the prior-filed nonprovisional and provisional applications set forth in the concurrently filed amendment.

The petition is **DISMISSED**

A petition for acceptance of a claim for late priority under 37 CFR §§ 1.78(a)(3) and 1.78(a)(6) is only applicable to those applications filed on or after November 29, 2000 and after the expiration of the period specified in 37 CFR §§ 1.78(a)(2)(ii) and 1.78(a)(5)(ii). In addition, the petition under 37 CFR §§ 1.78(a)(3) and 1.78(a)(6) must be accompanied by:

(1) the reference required by 35 U.S.C. §§ 120 and 119(e) and 37 CFR §§ 1.78(a)(2)(i) and 1.78(a)(5)(i) of the prior-filed application, unless previously submitted;

(2) the surcharge set forth in § 1.17(t); and

(3) a statement that the entire delay between the date the claim was due under 37 CFR §§ 1.78(a)(2)(ii) and 1.78(a)(5)(ii) and the date the claim was filed was unintentional. The Director may require additional where there is a question whether the delay was unintentional.

The petition does not comply with item (1).

37 CFR 1.78(a)(2)(i) requires that any nonprovisional application claiming the benefit of one or more prior-filed copending nonprovisional applications must contain or be amended to contain a

reference to each such prior-filed application, identifying it by application number (consisting of the series code and serial number) and indicating the relationship of the applications. The relationship between the applications is whether the subject application is a continuation, divisional, or continuation-in-part of a prior-filed nonprovisional application. An example of a proper benefit claim is: "This application is a continuation of Application No. 09/349,608, filed July 8, 1999." A benefit claim that merely states: "This application claims the benefit of Application No. 09/349,608, filed July 8, 1999," does not comply with 37 CFR 1.78(a)(2)(i) since the proper relationship, which includes the type of continuing application, is not stated. Also, the status of each nonprovisional parent application (if it is patented or abandoned) should also be indicated, following the filing date of the parent nonprovisional application. *See* MPEP Section 201.11, Reference to Prior Nonprovisional Applications. The amendment fails to comply with the provisions of 37 CFR 1.78(a)(2)(i) as well as, 37 CFR 1.121(2)(ii) and is therefore unacceptable as filed. Petitioner is cautioned that any further amendment not in compliance with 37 CFR 1.121 will not be treated.

Additionally, the amendment is not acceptable as drafted since it improperly incorporates by reference the prior-filed applications. An incorporation by reference statement added after an application's filing date is not effective because no new matter can be added to an application after its filing date (*see* 35 U.S.C. § 132(a)). If an incorporation by reference statement is included in an amendment to the specification to add a benefit claim under 35 U.S.C. § 120 after the filing date of the application, the amendment would not be proper. When a benefit claim under 35 U.S.C. § 120 is submitted after the filing of an application, the reference to the prior application cannot include an incorporation by reference statement of the prior application. *See* Dart Industries v. Banner, 636 F.2d 684, 207 USPQ 273 (C.A.D.C. 1980). *Note* MPEP §§ 201.06(c) and 608.04(b).

Before the petition under 37 CFR §§ 1.78(a)(3) and 1.78(a)(6) can be granted, a renewed petition and either an Application Data Sheet or a substitute amendment (complying with the provisions of 37 CFR 1.121 and 37 CFR 1.76(b)(5)) to correct the above matters are required.

Further correspondence with respect to this matter should be addressed as follows:

By mail: Mail Stop PETITIONS
Commissioner for Patents
Post Office Box 1450
Alexandria, VA 22313-1450

By hand: Customer Service Window
Mail Stop Petitions
Randolph Building
401 Dulany Street
Alexandria, VA 22314

By fax: (571) 273-8300
ATTN: Office of Petitions

Any questions concerning this matter may be directed to April M. Wise at (571) 272-1642. All other questions concerning the examination or status of this application should be directed to the Technology Center.

/dab/
David Bucci
Petitions Examiner
Office of Petitions

UNITED STATES PATENT AND TRADEMARK OFFICE

Commissioner for Patents
United States Patent and Trademark Office
P.O. Box 1450
Alexandria, VA 22313-1450
www.uspto.gov

WORKMAN NYDEGGER
1000 EAGLE GATE TOWER
60 EAST SOUTH TEMPLE
SALT LAKE CITY, UT 84111

COPY MAILED

JUL 0 8 2009

OFFICE OF PETITIONS

In re Application of	:	
Scott R. Watterson, et al.	:	
Application No. 10/856,676	:	DECISION ON PETITIONS
Filed: May 28, 2004	:	UNDER 37 CFR 1.78(a)(3)
Attorney Docket No. 13914.579.4.1	:	

This is a decision on the renewed petitions under 37 CFR §§ 1.78(a)(3), filed June 8, 2009 and supplemented on June 12, 2009, to accept an unintentionally delayed claim under 35 U.S.C. §120 for the benefit of the prior-filed applications set forth in the concurrently filed amendment.

The petitions are **GRANTED.**

A petition for acceptance of a claim for late priority under 37 CFR §§ 1.78(a)(3) is only applicable to those applications filed on or after November 29, 2000. Further, the petition is appropriate only after the expiration of the period specified in 37 CFR § 1.78(a)(2)(ii). In addition, the petition under 37 CFR § 1.78(a)(3) must be accompanied by:

(1) the reference required by 35 U.S.C. §§ 120 and 119(e) and 37 CFR §§ 1.78(a)(2)(i) and of the prior-filed application, unless previously submitted;
(2) the surcharge set forth in § 1.17(t); and
(3) a statement that the entire delay between the date the claim was due under 37 CFR §§ 1.78(a)(2)(ii) and the date the claim was filed was unintentional. The Director may require additional information where there is a question whether the delay was unintentional.

All the above requirements having been satisfied, the late claim for benefit of priority under 35 U.S.C. § 120 is accepted as being unintentionally delayed.

The granting of the petition to accept the delayed benefit claim to the prior-filed applications under 37 CFR § 1.78(a)(3)) should not be construed as meaning that this application is entitled to the benefit of the filing date of the prior-filed applications. In order for this application to be entitled to the benefit of the prior-filed applications, all other requirements

under 35 U.S.C. §§120 and 1.78(a)(1) and (a)(2) must be met. Similarly, the fact that the corrected Filing Receipt accompanying this decision on petition includes the prior-filed applications should not be construed as meaning that applicant is entitled to the claim for benefit of priority to the prior-filed applications noted thereon. Accordingly, the examiner will, in due course, consider this benefit claim and determine whether the application is entitled to the benefit of the earlier filing date.

A corrected Filing Receipt, which includes the priority claim to the prior-filed applications, accompanies this decision on petition.

Any questions concerning this matter may be directed to April M. wise at (571) 272-1642. All other inquiries concerning either the examination procedures or status of the application should be directed to the Technology Center.

This application is being forwarded to Technology Center Art Unit 3764 for consideration by the examiner of the claim under 35 U.S.C. § 120 of the prior-filed nonprovisional and provisional applications.

/dab/
David Bucci
Petitions Examiner
Office of Petitions

ATTACHMENT: Corrected Filing Receipt

UNITED STATES PATENT AND TRADEMARK OFFICE

UNITED STATES DEPARTMENT OF COMMERCE
United States Patent and Trademark Office
Address: COMMISSIONER FOR PATENTS
P.O. Box 1450
Alexandria, Virginia 22313-1450
www.uspto.gov

APPLICATION NUMBER	FILING or 371(c) DATE	GRP ART UNIT	FIL FEE REC'D	ATTY.DOCKET.NO	TOT CLAIMS	IND CLAIMS
10/856,676	05/28/2004	3764	1788	13914.579.4.1	46	3

CONFIRMATION NO. 3341

CORRECTED FILING RECEIPT

22913
Workman Nydegger
1000 Eagle Gate Tower
60 East South Temple
Salt Lake City, UT 84111

OC000000036594274

Date Mailed: 06/22/2009

Receipt is acknowledged of this non-provisional patent application. The application will be taken up for examination in due course. Applicant will be notified as to the results of the examination. Any correspondence concerning the application must include the following identification information: the U.S. APPLICATION NUMBER, FILING DATE, NAME OF APPLICANT, and TITLE OF INVENTION. Fees transmitted by check or draft are subject to collection. Please verify the accuracy of the data presented on this receipt. **If an error is noted on this Filing Receipt, please submit a written request for a Filing Receipt Correction. Please provide a copy of this Filing Receipt with the changes noted thereon. If you received a "Notice to File Missing Parts" for this application, please submit any corrections to this Filing Receipt with your reply to the Notice. When the USPTO processes the reply to the Notice, the USPTO will generate another Filing Receipt incorporating the requested corrections**

Applicant(s)

Scott R. Watterson, Logan, UT;
William T. Dalebout, Logan, UT;
Darren C. Ashby, Richmond, UT;

Power of Attorney: The patent practitioners associated with Customer Number 022913

Domestic Priority data as claimed by applicant

This application is a CIP of 09/776,410 02/02/2001 PAT 6,997,852
which is a CIP of 09/641,220 08/18/2000 PAT 6,458,060
and is a CIP of 09/641,600 08/18/2000 PAT 7,060,006
and is a CIP of 09/641,627 08/18/2000 PAT 7,166,062
which is a CIP of 09/496,560 02/02/2000 PAT 6,447,424
and said 09/641,220 08/18/2000
is a CIP of 09/496,560 02/02/2000 PAT 6,447,424
and said 09/641,600 08/18/2000
is a CIP of 09/496,560 02/02/2000 PAT 6,447,424
and said 09/641,627 08/18/2000
is a CIP of 09/349,608 07/08/1999 PAT 6,312,363
and said 09/641,220 08/18/2000
is a CIP of 09/349,608 07/08/1999 PAT 6,312,363
and said 09/641,600 08/18/2000
is a CIP of 09/349,608 07/08/1999 PAT 6,312,363

Foreign Applications

If Required, Foreign Filing License Granted: 07/26/2004

The country code and number of your priority application, to be used for filing abroad under the Paris Convention, is **US 10/856,676**

Projected Publication Date: Request for Non-Publication Acknowledged

Non-Publication Request: Yes

Early Publication Request: No
Title

METHODS AND SYSTEMS FOR CONTROLLING AN EXERCISE APPARATUS USING A USB COMPATIBLE PORTABLE REMOTE DEVICE

Preliminary Class

482

PROTECTING YOUR INVENTION OUTSIDE THE UNITED STATES

Since the rights granted by a U.S. patent extend only throughout the territory of the United States and have no effect in a foreign country, an inventor who wishes patent protection in another country must apply for a patent in a specific country or in regional patent offices. Applicants may wish to consider the filing of an international application under the Patent Cooperation Treaty (PCT). An international (PCT) application generally has the same effect as a regular national patent application in each PCT-member country. The PCT process **simplifies** the filing of patent applications on the same invention in member countries, but **does not result** in a grant of "an international patent" and does not eliminate the need of applicants to file additional documents and fees in countries where patent protection is desired.

Almost every country has its own patent law, and a person desiring a patent in a particular country must make an application for patent in that country in accordance with its particular laws. Since the laws of many countries differ in various respects from the patent law of the United States, applicants are advised to seek guidance from specific foreign countries to ensure that patent rights are not lost prematurely.

Applicants also are advised that in the case of inventions made in the United States, the Director of the USPTO must issue a license before applicants can apply for a patent in a foreign country. The filing of a U.S. patent application serves as a request for a foreign filing license. The application's filing receipt contains further information and guidance as to the status of applicant's license for foreign filing.

Applicants may wish to consult the USPTO booklet, "General Information Concerning Patents" (specifically, the section entitled "Treaties and Foreign Patents") for more information on timeframes and deadlines for filing foreign patent applications. The guide is available either by contacting the USPTO Contact Center at 800-786-9199, or it can be viewed on the USPTO website at http://www.uspto.gov/web/offices/pac/doc/general/index.html.

For information on preventing theft of your intellectual property (patents, trademarks and copyrights), you may wish to consult the U.S. Government website, http://www.stopfakes.gov. Part of a Department of Commerce initiative, this website includes self-help "toolkits" giving innovators guidance on how to protect intellectual property in specific countries such as China, Korea and Mexico. For questions regarding patent enforcement issues, applicants may call the U.S. Government hotline at 1-866-999-HALT (1-866-999-4158).

LICENSE FOR FOREIGN FILING UNDER

Title 35, United States Code, Section 184

Title 37, Code of Federal Regulations, 5.11 & 5.15

GRANTED

The applicant has been granted a license under 35 U.S.C. 184, if the phrase "IF REQUIRED, FOREIGN FILING LICENSE GRANTED" followed by a date appears on this form. Such licenses are issued in all applications where the conditions for issuance of a license have been met, regardless of whether or not a license may be required as set forth in 37 CFR 5.15. The scope and limitations of this license are set forth in 37 CFR 5.15(a) unless an earlier license has been issued under 37 CFR 5.15(b). The license is subject to revocation upon written notification. The date indicated is the effective date of the license, unless an earlier license of similar scope has been granted under 37 CFR 5.13 or 5.14.

This license is to be retained by the licensee and may be used at any time on or after the effective date thereof unless it is revoked. This license is automatically transferred to any related applications(s) filed under 37 CFR 1.53(d). This license is not retroactive.

The grant of a license does not in any way lessen the responsibility of a licensee for the security of the subject matter as imposed by any Government contract or the provisions of existing laws relating to espionage and the national security or the export of technical data. Licensees should apprise themselves of current regulations especially with respect to certain countries, of other agencies, particularly the Office of Defense Trade Controls, Department of State (with respect to Arms, Munitions and Implements of War (22 CFR 121-128)); the Bureau of Industry and Security, Department of Commerce (15 CFR parts 730-774); the Office of Foreign AssetsControl, Department of Treasury (31 CFR Parts 500+) and the Department of Energy.

NOT GRANTED

No license under 35 U.S.C. 184 has been granted at this time, if the phrase "IF REQUIRED, FOREIGN FILING LICENSE GRANTED" DOES NOT appear on this form. Applicant may still petition for a license under 37 CFR 5.12, if a license is desired before the expiration of 6 months from the filing date of the application. If 6 months has lapsed from the filing date of this application and the licensee has not received any indication of a secrecy order under 35 U.S.C. 181, the licensee may foreign file the application pursuant to 37 CFR 5.15(b).

UNITED STATES PATENT AND TRADEMARK OFFICE

UNITED STATES DEPARTMENT OF COMMERCE
United States Patent and Trademark Office
Address: COMMISSIONER FOR PATENTS
P.O. Box 1450
Alexandria, Virginia 22313-1450
www.uspto.gov

Workman Nydegger
1000 Eagle Gate Tower
60 East South Temple
Salt Lake City, UT 84111

Mail Date: 04/26/2010

Applicant	: Scott R. Watterson	: DECISION ON REQUEST FOR
Patent Number	: 7628730	: RECALCULATION of PATENT
Issue Date	: 12/08/2009	: TERM ADJUSTMENT IN VIEW
Application No	: 10/856,676	: OF WYETH AND NOTICE OF INTENT TO
Filed	: 05/28/2004	: ISSUE CERTIFICATE OF CORRECTION
		:

The Request for Recalculation is **GRANTED** to the extent indicated.

The patent term adjustment has been determined to be **994** days. The USPTO will *sua sponte* issue a certificate of correction reflecting the amount of PTA days determined by the recalculation.

Prior to the issuance of the certificate of correction, the USPTO will afford patentee an opportunity to be heard and request reconsideration. Accordingly, patentee has **one month or thirty (30) days**, whichever is longer, to file a request for reconsideration of this patent term adjustment calculation. See 35 U.S.C. 154(b)(3)(B)(ii) and 37 CFR 1.322(a)(4). No extensions of time will be granted under 37 CFR 1.136.

Patentee should use document code PET.OP if electronically filing a request for reconsideration of this patent term adjustment calculation. The patentee must also include the information required by 37 CFR 1.705(b)(2) and the fee required by 37 CFR 1.18(e). If patentee does not file a timely request for reconsideration of this patent term adjustment calculation including the information required by 37 CFR 1.705(b)(2) and the fee required by 37 CFR 1.18(e), the USPTO will issue a certificate of correction reflecting the PTA determination noted above.

Patentee should be aware that in order to preserve the right to review in the United States District Court for the District of Columbia of the USPTO patent term adjustment determination, patentee must ensure that he or she also take the steps required under 35 U.S.C. 154(b)(4)(A) in a timely manner. Nothing in the request for recalculation should be construed as providing an alternative time frame for commencing a civil action under 35 U.S.C. 154(b)(4)(A).

Any questions concerning this decision should be directed to the Office of Patent Legal Administration at 571-272-7702.

UNITED STATES PATENT AND TRADEMARK OFFICE

Commissioner for Patents
United States Patent and Trademark Office
P.O. Box 1450
Alexandria, VA 22313-1450
www.uspto.gov

MAILED

MAY 07 2010

OFFICE OF PETITIONS

Kilpatrick Stockton LLP- Adobe Systems, Inc. 58083
Kilpatrick Stockton LLP
1100 Peachtree Street
Atlanta, GA 30309-4530

In re Patent of Gay et al.	:	DECISION ON REQUEST
Patent No. 7,590,947	:	FOR RECONSIDERATION OF
Issue Date: September 15, 2009	:	PATENT TERM ADJUSTMENT
Application No. 10/856,701	:	AND NOTICE OF INTENT TO
Filing Date: May 28, 2004	:	ISSUE CERTIFICATE OF
Attorney Docket No. 58083/374990	:	CORRECTION

This is a decision on the petition filed November 16, 2009, which is being treated as a petition under 37 C.F.R. § 1.705(d) requesting the patent term adjustment indicated on the patent be corrected to indicate the term of the patent is extended or adjusted by one thousand five hundred ten (1,510) days.

The petition to correct the patent term adjustment indicated on the patent to indicate the term of the patent is extended or adjusted by one thousand five hundred ten (1,510) days is **GRANTED to the extent indicated herein**.

The Office will *sua sponte* issue a certificate of correction. Pursuant to 37 C.F.R. § 1.322, the Office will not issue a certificate of correction without first providing assignee or patentee an opportunity to be heard. Accordingly, patentees are given **one (1) month or thirty (30) days,** whichever is longer, from the mail date of this decision to respond. No extensions of time will be granted under 37 C.F.R. § 1.136.

Patentees allege the proper patent term adjustment is 1,510 days. However, Patentees failed to remove any time consumed by appeal when calculating the period of delay under 35 U.S.C. § 154(b)(1)(B) ("B Delay").

Pursuant to 35 U.S.C. § 154(b)(1)(B)(ii), B Delay does not include any time period consumed by appellate review.

As a result of the removal of time consumed by appellate review from the period of B Delay, the patent term adjustment is 1,338 days.

The Office acknowledges submission of the $200.00 fee set forth in 37 C.F.R. § 1.18(e). No additional fees are required.

The application is being forwarded to the Certificates of Correction Branch for issuance of a certificate of correction. The Office will issue a certificate of correction indicating that the term of the patent is extended or adjusted by **one thousand three hundred thirty-eight (1,338)** days.

Telephone inquiries specific to this decision should be directed to Senior Petitions Attorney Steven Brantley at (571) 272-3203.

Charles Steven Brantley
Senior Petitions Attorney
Office of Petitions

Enclosure: Copy of DRAFT Certificate of Correction

UNITED STATES PATENT AND TRADEMARK OFFICE

CERTIFICATE OF CORRECTION

PATENT NO.	:	7;590,947 B1
ISSUE DATE	:	September 15, 2009
INVENTOR(S)	:	Gay et al.

DRAFT

It is certified that error appears in the above-identified patent and that said Letters Patent is hereby corrected as shown below:

On the cover page,

[*] Notice: Subject to any disclaimer, the term of this patent is extended or adjusted under 35 U.S.C. 154(b) by 841 days.

Delete the phrase "by 841 days" and insert - by 1338 days--

UNITED STATES PATENT AND TRADEMARK OFFICE

Commissioner for Patents
United States Patent and Trademark Office
P.O. Box 1450
Alexandria, VA 22313-1450
www.uspto.gov

IPSG
PO BOX 700640
SAN JOSE CA 95170-0640

COPY MAILED

AUG 0 4 2005

OFFICE OF PETITIONS

In re Application of	:	
Albanese, et al.	:	
Application No. 10/856,704	:	ON PETITION
Filed: May 28, 2004	:	
Attorney Docket No. VNDV-P002	:	

This is a decision on the petition under 37 CFR 1.137(b), filed June 29, 2005.

The petition is **DISMISSED**.

Any request for reconsideration of this decision must be submitted within TWO (2) MONTHS from the mail date of this decision. Extensions of time under 37 CFR 1.136(a) are permitted. The reconsideration request should include a cover letter entitled "Renewed Petition Under 37 CFR 1.137(b)." This is **not** a final agency decision within the meaning of 5 USC 704.

35 USC 122(b)(2)(B)(iii) states:

> An applicant who has made a request under clause (I) but who subsequently files, in a foreign country or under a multilateral international agreement specified in clause (I), an application directed to the invention disclosed in the application filed in the Patent and Trademark Office, shall notify the Director of such filing not later than 45 days after the date of the filing of such foreign or international application. A failure of the applicant to provide such notice within the prescribed period shall result in the application being regarded as abandoned, unless it is shown to the satisfaction of the Director that the delay in submitting the notice was unintentional.

37 CFR 1.137(b) is the applicable regulation for reviving an application due to unintentional delay. A petition to revive under 37 CFR 1.137(b) pursuant to 37 CFR 1.137(f) must be accompanied by:

(1) the reply, which is met by the notification of such filing in a foreign country or under a multinational treaty;

(2) the petition fee as set forth in 37 CFR 1.17(m); and

(3) a statement that the entire delay in filing the required reply from the due date of the reply until the filing of a grantable petition was unintentional.

The instant petition does not meet requirement (1). Petitioner has not notified the Office of the date of the foreign filing.

Further correspondence with respect to this matter should be addressed as follows:

By mail: Mail Stop Petitions
Commissioner for Patents
P.O. Box 1450
Alexandria VA 22313-1450

By FAX: (571)273-8300
Attn: Office of Petitions

Telephone inquiries regarding this decision should be directed to the undersigned at (571)272-3207.

Cliff Congo
Petitions Attorney
Office of Petitions

UNITED STATES PATENT AND TRADEMARK OFFICE

Commissioner for Patents
United States Patent and Trademark Office
P.O. Box 1450
Alexandria, VA 22313-1450
www.uspto.gov

IPSG
PO BOX 700640
SAN JOSE CA 95170-0640

COPY MAILED

OCT 0 6 2005

OFFICE OF PETITIONS

In re Application of	:	
Albanese, et al.	:	
Application No. 10/856,704	:	ON PETITION
Filed: May 28, 2004	:	
Attorney Docket No. VNDV-P002	:	

This is a decision on the renewed petition under 37 CFR 1.137(b), pursuant to 37 CFR 1.137(f), filed August 24, 2005.

The petition is **GRANTED**.

Petitioner states that the instant application is the subject of an international application filed on April 29, 2005. However, the US Patent and Trademark Office was unintentionally not notified of this filing within 45 days subsequent to the filing of the PCT application.

In view of the above, this application became abandoned pursuant to 35 USC 122(b)(2)(B)(iii) and 37 CFR 1.213(c) for failure to timely notify the Office of the filing of an application in a foreign country, or under a multilateral international agreement, that requires publication of applications 18 months after filing.

A petition under 37 CFR 1.137(f) must be accompanied by:

(1) the reply, which is met by the notification of such filing in a foreign country or under a multinational treaty;

(2) the petition fee as set forth in 37 CFR 1.17(m); and

(3) a statement that the entire delay in filing the required reply from the due date of the reply until the filing of a grantable petition was unintentional.

The instant petition has been found to be in compliance with 37 CFR 1.137(f). Accordingly, the failure to timely notify the Office of a foreign or international filing within 45 days after the date of filing of such foreign or international application as provided by 35 USC 122(b)(2)(B)(iii) and 37 CFR 1.213(c) is accepted as having been unintentionally delayed.

The previous Request and Certification under 35 USC 122(b)(2)(B)(i) has been rescinded.

As petitioner previously paid the petition fee with the petition filed on June 29, 2005, no petition fee has been charged.

The application file is being forwarded to Group Art Unit 2161 for examination in due course.

Telephone inquiries regarding this decision should be directed to the undersigned at (571)272-3207.

Cliff Congo
Petitions Attorney
Office of Petitions

UNITED STATES PATENT AND TRADEMARK OFFICE

UNITED STATES DEPARTMENT OF COMMERCE
United States Patent and Trademark Office
Address: COMMISSIONER FOR PATENTS
P.O. Box 1450
Alexandria, Virginia 22313-1450
www.uspto.gov

APPLICATION NO.	FILING DATE	FIRST NAMED INVENTOR	ATTORNEY DOCKET NO.	CONFIRMATION NO.
10/856,706	05/28/2004	Mario Blaum	HSJ920030257US1	9460

7590 09/02/2008

Terrance A. Meador, Esq.
INCAPLAW
Suite K
1050 Rosecrans Street
San Diego, CA 92106

EXAMINER
NGUYEN, LEON VIET Q

ART UNIT	PAPER NUMBER
2611	

MAIL DATE	DELIVERY MODE
09/02/2008	PAPER

Please find below and/or attached an Office communication concerning this application or proceeding.

The time period for reply, if any, is set in the attached communication.

SPE RESPONSE FOR CERTIFICATE OF CORRECTION

Paper No.:20080812

DATE : August 12, 2008

TO SPE OF : ART UNIT

SUBJECT : Request for Certificate of Correction on Patent No.: 7,388,938

A response is requested with respect to the accompanying request for a certificate of correction.

Please complete this form and return with file, within **7** days to:
Certificates of Correction Branch - ST (South Tower) 9A22
Palm location **7590** - Tel. No. (703) 305-8309

With respect to the change(s) requested, correcting Office and/or Applicant's errors, should the patent read as shown in the certificate of correction? No new matter should be introduced, nor should the scope or meaning of the claims be changed.

Thank You For Your Assistance **Certificates of Correction Branch**

The request for issuing the above-identified correction(s) is hereby:

Note your decision on the appropriated box.

☒ **Approved** All changes apply.

☐ **Approved in Part** Specify below which changes **do not** apply.

☐ **Denied** State the reasons for denial below.

Comments:

/JASON CHAN/
Supervisory Patent Examiner.Art Unit 2613

SPE RESPONSE FOR CERTIFICATE OF CORRECTION

Paper No.: X

DATE : August 01, 2008

TO SPE OF : ART UNIT 2611

SUBJECT : Request for Certificate of Correction for Appl. No.: 10/856706 Patent No.: 7388938 B2

A response is requested with respect to a request for a certificate of correction.

With respect to the change(s) requested to correct Office and/or Applicant's errors, should the patent read as shown in the certificate of correction attached herewith or the COCIN document(s), in IFW images for the above-identified patented application? No new matter should be introduced, nor should the scope or meaning of the claims be changed.

If the response is for an IFW, within **7** days, please complete and forward the response, to the employee (named below) via scanning into application images, using document code **COCX**.

DO NOT SENT TO ATTORNEY

If the response is for a paper file wrapper, please complete the response and forward the response with the paper file wrapper, to the employee (named below), within **7** days, to:

Certificates of Correction Branch (CofC)
South Tower - 9A22
Palm Location 7580

You can fax the Directors/SPE response to 571-270-9990

LAMONTE NEWSOME
Certificates of Correction Branch
703-308-9390 ext. 112

Thank You For Your Assistance

The request for issuing the above-identified correction(s) is hereby:

Note your decision on the appropriate box.

- ☑ **Approved** — **All** changes apply.
- ☐ **Approved in Part** — Specify below which changes **do not** apply.
- ☐ **Denied** — State the reasons for denial below.

Comments: _____

David C. Payne
DAVID C. PAYNE
SUPERVISORY PATENT EXAMINER

2611
SPE — Art Unit

UNITED STATES PATENT AND TRADEMARK OFFICE

Commissioner for Patents
United States Patent and Trademark Office
P.O. Box 1450
Alexandria, VA 22313-1450
www.uspto.gov

VAN PELT, YI & JAMES LLP
10050 N. FOOTHILL BLVD #200
CUPERTINO, CA 95014

COPY MAILED
APR 19 2006
OFFICE OF PETITIONS

In re Application of

Joseph Dewey Griffin.

Application No. 10/856,709

Filed: May 28, 2004

Attorney Docket No. 137803

DECISION ON PETITION

This is a decision on the petition under 37 CFR 1.137(b), filed March 29, 2006, to revive the above-identified application.

The petition is **GRANTED**.

The above-cited application became abandoned for failure to reply in a timely manner to the restriction/election requirement mailed June 28, 2005, which set a shortened statutory period for reply of one (1) month from its mailing date. No extensions of time were obtained within the allowable period. Accordingly, the application became abandoned on July 29, 2005. A Notice of Abandonment was mailed on February 23, 2006.

The election filed March 29, 2006, is noted and made of record.

The application is being forwarded to Technology Center 2800, 2839 for further processing.

Telephone inquiries concerning this decision should be directed to the undersigned at (571) 272-3222.

Kenya A. McLaughlin
Petitions Attorney
Office of Petitions

UNITED STATES PATENT AND TRADEMARK OFFICE

Commissioner for Patents
United States Patent and Trademark Office
P.O. Box 1450
Alexandria, VA 22313-1450
www.uspto.gov

COPY MAILED

MAY 0 4 2007

OFFICE OF PETITIONS

SILCON VALLEY PATENT GROUP LLP
2350 MISSION COLLEGE BOULEVARD
SUITE 360
SANTA CLARA CA 95054

In re Application of	:	
Hubert H. Dowling	:	
Application No. 10/856,711	:	ON PETITION
Filed: May 28, 2004	:	
Attorney Docket No. SYN004 US	:	

This is a decision on the petition, filed May 3, 2007, under 37 CFR 1.313(c)(2) to withdraw the above-identified application from issue after payment of the issue fee.

The petition is **GRANTED.**

The above-identified application is withdrawn from issue for consideration of a submission under 37 CFR 1.114 (request for continued examination). See 37 CFR 1.313(c)(2).

Petitioner is advised that the issue fee paid on April 16, 2007 in the above-identified application cannot be refunded. If, however, the above-identified application is again allowed, petitioner may request that it be applied towards the issue fee required by the new Notice of Allowance.[1]

Telephone inquiries should be directed to the undersigned at (571) 272-3208.

The examiner of Technology Center AU 2825 will consider the request for continued examination under 37 CFR 1.114.

Karen Creasy

Karen Creasy
Petitions Examiner
Office of Petitions

---

[1] The request to apply the issue fee to the new Notice may be satisfied by completing and returning the new Issue Fee Transmittal Form PTOL-85(b), which includes the following language thereon: "Commissioner for Patents is requested to apply the Issue Fee and Publication Fee (if any) or re-apply any previously paid issue fee to the application identified above." Petitioner is advised that, whether a fee is indicated as being due or not, the Issue Fee Transmittal Form **must** be completed and timely submitted to avoid abandonment. Note the language in bold text on the first page of the Notice of Allowance and Fee(s) Due (PTOL-85).

OIPE IAP88
FEB 27 2007
PATENT & TRADEMARK OFFICE

Cof C

PATENT
03144-P0047B WWW/SBS

IN THE UNITED STATES PATENT AND TRADEMARK OFFICE

Applicants	Klaus Fischer, *et al.*
Application No. 10/856,714	Filing Date: May 28, 2004
Title of Application:	Jet Circuit Breaker System
Confirmation No. 1008	Art Unit: 2836
Examiner	

Approved
RPP

Commissioner for Patents
Post Office Box 1450
Alexandria, VA 22313-1450

Certificate
MAR 01 2007
of Correction

ATTENTION: Decision and Certificate of Correction
Branch of the Patent Issue Division

Request for Certificate of Correction
of Patent for PTO Mistake (37 CFR 1.322(A))

Attached in duplicate is Form PTO-1050 with at least one copy being suitable for printing.

NOTE: Form PTO-1050, using the column and line number in the printed patent, should be used exclusively regardless of the length or complexity of the subject matter. MPEP §1485.

NOTE: The patent grant should be retained by the patentee. The PTO does not attach the certificate of correction to the patentee's copy of the patent. The patent grant will be returned to the patentee if submitted. MPEP §1485.

The exact page and line number where the errors are shown correctly in the application file are:

NOTE: This information should be identified in this request, however, on Form PTO-1050, only the column and line number in the printed patent should be used. MPEP §1485.

Page 1, Column 1:

Related U.S. Application Data
(63) Continuation of application No. 10/167,813 filed on June 12, 2002
(30) Foreign Application Priority Data
June 15, 2001 (DE).....10 128 920.0

Certificate of Mailing: I hereby certify that this correspondence is today being deposited with the U.S. Postal Service as first class mail in an envelope addressed to: Commissioner for Patents; Post Office Box 1450; Alexandria, VA 22313-1450.

February 23, 2007 Alice Jones
Alice Jones

MAR - 5 2007

Please send the Certificate to:

Name: Wesley W. Whitmyer, Jr., Esquire
Address: ST.ONGE STEWARD JOHNSTON & REENS LLC
986 Bedford Street
Stamford, Connecticut 06905

Respectfully submitted,

February 23, 2007

Wesley W. Whitmyer, Jr., Registration No. 33,558
Steven B. Simonis, Registration No. 54,449
Attorneys for Applicants
ST.ONGE STEWARD JOHNSTON & REENS LLC
986 Bedford Street
Stamford, CT 06905-5619
203 324-6155

MAR 5 2007

UNITED STATES PATENT AND TRADEMARK OFFICE

CERTIFICATE OF CORRECTION

PATENT NO. : 7,166,935

DATED : January 23, 2007

INVENTOR : Klaus Fischer *et al.*

It is certified that error appears in the above-identified patent and that said Letters Patent is hereby corrected as shown below:

Page 1, Column 1:

Related U.S. Application Data

(64) Continuation of application No. 10/167,813 filed on June 12, 2002

(31) Foreign Application Priority Data

June 15, 2001 (DE).....10 128 920.0

Mailing Address Of Sender: Patent No.: 7,166,935

Certificate of Correction (PTO Form 1050) - Amended

Wesley W. Whitmyer, Jr., Esquire
ST.ONGE STEWARD JOHNSTON & REENS LLC
986 Bedford Street
Stamford, Connecticut 06905-5619

MAR - 5 2007

UNITED STATES PATENT AND TRADEMARK OFFICE

CERTIFICATE OF CORRECTION

PATENT NO. : 7,166,935

DATED : January 23, 2007

INVENTOR : Klaus Fischer *et al.*

It is certified that error appears in the above-identified patent and that said Letters Patent is hereby corrected as shown below:

Page 1, Column 1:

Related U.S. Application Data

(64) Continuation of application No. 10/167,813 filed on June 12, 2002

(31) Foreign Application Priority Data

June 15, 2001 (DE).....10 128 920.0

Mailing Address Of Sender: Patent No.: 7,166,935

Certificate of Correction (PTO Form 1050) - Amended

Wesley W. Whitmyer, Jr., Esquire
ST.ONGE STEWARD JOHNSTON & REENS LLC
986 Bedford Street
Stamford, Connecticut 06905-5619

MAR - 5 2007

OIPE IAP06
FEB 2 7 2007
PATENT & TRADEMARK OFFICE

UNITED STATES PATENT AND TRADEMARK OFFICE

UNITED STATES DEPARTMENT OF COMMERCE
United States Patent and Trademark Office
Address: COMMISSIONER FOR PATENTS
P.O. Box 1450
Alexandria, Virginia 22313-1450
www.uspto.gov

APPL NO.	FILING OR 371 (c) DATE	ART UNIT	FIL FEE REC'D	ATTY.DOCKET NO	DRAWINGS	TOT CLMS	IND CLMS
10/856,714	05/28/2004	2836	770	03144- P0047B	1	15	3

CONFIRMATION NO. 1008

24126
ST. ONGE STEWARD JOHNSTON & REENS, LLC
986 BEDFORD STREET
STAMFORD, CT 06905-5619

RECEIVED
St. Onge Steward Johnston & Reens
JUL 2 8 2004

FILING RECEIPT

OC000000013344476

W
SDS

FILE 8-28-04-IDS
DKT

Date Mailed: 07/26/2004

Receipt is acknowledged of this regular Patent Application. It will be considered in its order and you will be notified as to the results of the examination. Be sure to provide the U.S. APPLICATION NUMBER, FILING DATE, NAME OF APPLICANT, and TITLE OF INVENTION when inquiring about this application. Fees transmitted by check or draft are subject to collection. Please verify the accuracy of the data presented on this receipt. **If an error is noted on this Filing Receipt, please write to the Office of Initial Patent Examination's Filing Receipt Corrections, facsimile number 703-746-9195. Please provide a copy of this Filing Receipt with the changes noted thereon. If you received a "Notice to File Missing Parts" for this application, please submit any corrections to this Filing Receipt with your reply to the Notice. When the USPTO processes the reply to the Notice, the USPTO will generate another Filing Receipt incorporating the requested corrections (if appropriate).**

Applicant(s)

Klaus Fischer, Friedrichshafen, GERMANY;
Mike Wills, Huddersfield, UNITED KINGDOM;

Domestic Priority data as claimed by applicant

This application is a CON of 10/167,813 06/12/2002

Foreign Applications

GERMANY 101 28 920.0 06/15/2001

If Required, Foreign Filing License Granted: 07/26/2004

Projected Publication Date: 11/04/2004

Non-Publication Request: No

Early Publication Request: No

Title

Circuit breaker system

Preliminary Class

MAR - 5 2007

307

LICENSE FOR FOREIGN FILING UNDER
Title 35, United States Code, Section 184
Title 37, Code of Federal Regulations, 5.11 & 5.15

GRANTED

The applicant has been granted a license under 35 U.S.C. 184, if the phrase "IF REQUIRED, FOREIGN FILING LICENSE GRANTED" followed by a date appears on this form. Such licenses are issued in all applications where the conditions for issuance of a license have been met, regardless of whether or not a license may be required as set forth in 37 CFR 5.15. The scope and limitations of this license are set forth in 37 CFR 5.15(a) unless an earlier license has been issued under 37 CFR 5.15(b). The license is subject to revocation upon written notification. The date indicated is the effective date of the license, unless an earlier license of similar scope has been granted under 37 CFR 5.13 or 5.14.

This license is to be retained by the licensee and may be used at any time on or after the effective date thereof unless it is revoked. This license is automatically transferred to any related applications(s) filed under 37 CFR 1.53(d). This license is not retroactive.

The grant of a license does not in any way lessen the responsibility of a licensee for the security of the subject matter as imposed by any Government contract or the provisions of existing laws relating to espionage and the national security or the export of technical data. Licensees should apprise themselves of current regulations especially with respect to certain countries, of other agencies, particularly the Office of Defense Trade Controls, Department of State (with respect to Arms, Munitions and Implements of War (22 CFR 121-128)); the Office of Export Administration, Department of Commerce (15 CFR 370.10 (j)); the Office of Foreign Assets Control, Department of Treasury (31 CFR Parts 500+) and the Department of Energy.

NOT GRANTED

No license under 35 U.S.C. 184 has been granted at this time, if the phrase "IF REQUIRED, FOREIGN FILING LICENSE GRANTED" DOES NOT appear on this form. Applicant may still petition for a license under 37 CFR 5.12, if a license is desired before the expiration of 6 months from the filing date of the application. If 6 months has lapsed from the filing date of this application and the licensee has not received any indication of a secrecy order under 35 U.S.C. 181, the licensee may foreign file the application pursuant to 37 CFR 5.15(b).

MAR - 5 2007

UNITED STATES PATENT AND TRADEMARK OFFICE

COMMISSIONER FOR PATENTS
UNITED STATES PATENT AND TRADEMARK OFFICE
P.O. BOX 1450
ALEXANDRIA, VA 22313-1450
www.uspto.gov

COPY MAILED

JAN 19 2007

OFFICE OF PETITIONS

DOUGLAS E. WARREN
109 CHESTERFIELD BUSINESS PARKWAY
CHESTERFIELD, MO 63005

In re Application of :
Jeff Snelling :
Application No. 10/856,731 : ON PETITION
Filed: May 27, 2004 :
Attorney Docket No. SNELLING P060414US :

This is a decision on the petition, filed May 19, 2006, to revive the above-identified application under the provisions of 37 CFR 1.137(b).

The petition is **GRANTED**.

The application became abandoned for a failure to reply in a timely manner to the non-final Office action mailed October 6, 2005. A Notice of Abandonment was mailed on April 13, 2006. On May 19, 2006, the present petition was filed, including an amendment and a petition for extension of time.

The petition satisfies the requirements of 37 CFR 1.137(b) in that petitioner has supplied (1) the reply in the form of an amendment; (2) the petition fee of $750; and (3) the required statement of unintentional delay.

Extensions of time under 37 CFR 1.136 are available only if asked for prior to or with the response. In no case, however, may an applicant respond later than the maximum time period set by statute. Accordingly, if the question of abandonment arises when the provisions of 37 CFR 1.136 can no longer be used, then the application is abandoned when the unextended time for response has expired. Since, no extension of time fees are due on a petition for revival, petitioner is entitled to a refund of the $1,080 extension fees included with this petition.

Any request for refund must included a copy of this decision and be mailed to Mail Stop 16, Director of the U.S. Patent and Trademark Office, P. O. Box 1450, Alexandria, VA 22313-1450 or faxed to the Customer Service Help Desk at (571) 273-6500.

Telephone inquiries concerning this decision may be directed to the undersigned at (571) 272-3204. All other inquiries regarding this application should be directed to the Technology Center.

The application file is being forwarded to Technology Center AU 3673 for consideration of the amendment filed May 19, 2006.

Sherry D. Brinkley
Petitions Examiner
Office of Petitions

UNITED STATES PATENT AND TRADEMARK OFFICE

UNITED STATES DEPARTMENT OF COMMERCE
United States Patent and Trademark Office
Address: COMMISSIONER FOR PATENTS
P.O. Box 1450
Alexandria, Virginia 22313-1450
www.uspto.gov

DOCKET CLERK
P.O. DRAWER 800889
DALLAS, TX 75380

Mail Date: 05/03/2010

Applicant	: John E. Lumsden	: DECISION ON REQUEST FOR
Patent Number	: 7613289	: RECALCULATION of PATENT
Issue Date	: 11/03/2009	: TERM ADJUSTMENT IN VIEW
Application No	: 10/856,733	: OF WYETH AND NOTICE OF INTENT TO
Filed	: 05/28/2004	: ISSUE CERTIFICATE OF CORRECTION
		:

The Request for Recalculation is **GRANTED** to the extent indicated.

The patent term adjustment has been determined to be **1460** days. The USPTO will *sua sponte* issue a certificate of correction reflecting the amount of PTA days determined by the recalculation.

Prior to the issuance of the certificate of correction, the USPTO will afford patentee an opportunity to be heard and request reconsideration. Accordingly, patentee has **one month or thirty (30) days**, whichever is longer, to file a request for reconsideration of this patent term adjustment calculation. See 35 U.S.C. 154(b)(3)(B)(ii) and 37 CFR 1.322(a)(4). No extensions of time will be granted under 37 CFR 1.136.

Patentee should use document code PET.OP if electronically filing a request for reconsideration of this patent term adjustment calculation. The patentee must also include the information required by 37 CFR 1.705(b)(2) and the fee required by 37 CFR 1.18(e). If patentee does not file a timely request for reconsideration of this patent term adjustment calculation including the information required by 37 CFR 1.705(b)(2) and the fee required by 37 CFR 1.18(e), the USPTO will issue a certificate of correction reflecting the PTA determination noted above.

Patentee should be aware that in order to preserve the right to review in the United States District Court for the District of Columbia of the USPTO patent term adjustment determination, patentee must ensure that he or she also take the steps required under 35 U.S.C. 154(b)(4)(A) in a timely manner. Nothing in the request for recalculation should be construed as providing an alternative time frame for commencing a civil action under 35 U.S.C. 154(b)(4)(A).

Any questions concerning this decision should be directed to the Office of Patent Legal Administration at 571-272-7702.

UNITED STATES PATENT AND TRADEMARK OFFICE

Commissioner for Patents
United States Patent and Trademark Office
P.O. Box 1450
Alexandria, VA 22313-1450
www.uspto.gov

APR 29 2005

CHARLES N. J. RUGGIERO, ESQ.
OHLANDT, GREELEY, RUGGIERO & PERLE, L.L.P.
10TH FLOOR
ONE LANDMARK SQUARE
STAMFORD CT 06901-2682

In re Application of	:
Olga V. Dueva-Koganov et al	:
Serial No.: 10/856,737	: PETITION TO MAKE SPECIAL
Filed: May 28, 2004	:
Attorney Docket No.: 460.2270	:

This is in response to applicants' petition filed April 14, 2005, to make the above-identified application special under the provisions of 37 CFR 1.102(d).

Applicant has satisfied the provisions set forth in M.P.E.P. 708.02, VIII. Therefor the petition is **GRANTED**.

The following condition applies to the grant of this petition: If, upon examination, it is determined that a restriction requirement is necessary because of multiple inventions being claimed, applicant will be required to make an election without traverse of a single invention to be prosecuted. Failure to make an election without traverse will void the special status accorded in this decision.

The application will be forwarded the examiner for action on the merits commensurate with this decision.

Note – amendments to the claims should not be placed in a petition to make special. They should be filed as a separate paper.

Should there be any questions with regard to this letter please contact William R. Dixon, Jr. by letter addressed to the Director, Technology Center 1600, P.O. Box 1450, Alexandria, VA 22313-1450, or by telephone at 571-272-0519 or by facsimile transmission at the general Office facsimile number, 571-273-8300.

William R. Dixon, Jr.
Special Program Examiner
Technology Center 1600

United States
Patent And
Trademark Office

P.O. Box 1450, Alexandria, Virginia 22313-1450 – www.uspto.gov

PETITION DECISION

08/18/04

Eric L. Prahl
Wilmer Cutler Pickering Hale and Dorr LLP
60 State Street
Boston, MA 02109

Dear Applicant:

The Box PG Pub replacement drawings for application number 10/856750 received on 07/26/04 by the U. S. Patent and Trademark Office will be included for patent publication.

Telephone inquiries should be directed to Kaletus King, Office of Pre-Grant Publication 703 605-4283.

Kaletus King

Signature of Reviewer, Office of Pre-Grant Publication

UNITED STATES PATENT AND TRADEMARK OFFICE

UNITED STATES DEPARTMENT OF COMMERCE
United States Patent and Trademark Office
Address: COMMISSIONER FOR PATENTS
P.O. Box 1450
Alexandria, Virginia 22313-1450
www.uspto.gov

APPLICATION NO.	FILING DATE	FIRST NAMED INVENTOR	ATTORNEY DOCKET NO.	CONFIRMATION NO.
10/856,756	06/01/2004	Yusuke Amino	250550US0CONT	3474

22850 7590 06/19/2008
OBLON, SPIVAK, MCCLELLAND MAIER & NEUSTADT, P.C.
1940 DUKE STREET
ALEXANDRIA, VA 22314

EXAMINER
SHIAO, REI TSANG

ART UNIT	PAPER NUMBER
1626	

NOTIFICATION DATE	DELIVERY MODE
06/19/2008	ELECTRONIC

Please find below and/or attached an Office communication concerning this application or proceeding.

The time period for reply, if any, is set in the attached communication.

Notice of the Office communication was sent electronically on above-indicated "Notification Date" to the following e-mail address(es):

patentdocket@oblon.com
oblonpat@oblon.com
jgardner@oblon.com

UNITED STATES PATENT AND TRADEMARK OFFICE

Commissioner for Patents
United States Patent and Trademark Office
P.O. Box 1450
Alexandria, VA 22313-1450
www.uspto.gov

JUN 1 9 2008

OBLON, SPIVAK, MCCLELLAND, MAIER & NEUSTADT, P.C.
1940 DUKE STREET
ALEXANDRIA, VA 22314

In re Application of	:
Yusuke Amino et al.	:
Serial No.: 10/856,756	: PETITION DECISION
Filed: June 1, 2004	:
Attorney Docket No.: 250550US0CONT	:

This is in response to the petition under 37 CFR § 1.181, filed May 16, 2008 requesting that the final Office action mailed on March 19, 2008 be entered into the above referenced application as a non-final Office action.

BACKGROUND

A review of the file history shows that on July 19, 2006, the examiner rejected claims 1-12 under 35 U.S.C. 102 (b) over Abushanad et al.(US 5,994,559), rejected claims 1-33 under 35 U.S.C. 103 (a) over Abushanad et al. (US 5,994,559), rejected claims 1-33 under 35 U.S.C. 103 (a) over Van Wyk et al. (US Patent No. 5,128,164) and provisionally rejected claims 1-12 and 23-33 under obviousness-type double patenting (ODP) over claims 1 and 6 of Takemoto (co-pending application serial number 11/180,622).

On October 19, 2006 applicants traversed the 35 U.S.C. 102 (b) rejection over Abushanad et al. and the 35 U.S.C. 103 (a) rejection of Abushanad et al. and Van Wyk et al. Applicants also requested that the ODP rejection be held in abeyance until allowable subject matter was indicated by the examiner.

On December 7, 2006, the examiner maintained the rejection of claims 1-33 under 35 U.S.C 103 (a) over Van Wyk et al. and maintained the ODP rejection and made the rejection final.

On July 9, 2007 applicants again traversed the 35 U.S.C. 103(a) rejection of Van Wyk et al. for the same reasons as above and maintained that the ODP rejection be held in abeyance until allowable subject matter was indicated by the examiner.

On September 13, 2007, the examiner mailed a non-final Office action, setting forth a three-month shortened statutory period for reply. In this Office action, the rejection of claims 1-12 and 23-33 as being rejected under 35 U.S.C. 103 (a) over Van Wyk et al. was withdrawn by the

examiner. The examiner continued to reject claims 13-22 under 35 U.S.C. 103 (a) over Van Wyk et al. A provisional ODP rejection of claims 1-12 and 23-33 over Takemoto et al. (co-pending application number 11/180,622) was maintained since the examiner stated that applicant had not filed a terminal disclaimer to obviate the ODP rejection.

On December 13, 2007, applicants filed an amendment cancelling claims 13-22, thus obviating the 35 U.S.C. 103 (a) rejection over Van Wyk et al. In addition, applicants traversed the ODP rejection stating that if the only remaining rejection was an ODP rejection over two applications, the examiner should withdraw the ODP rejection in the earlier filed application thereby permitting that application to issue without the need for a terminal disclaimer.

On March 19, 2008, the examiner mailed a final Office action indicating that since applicants cancelled claims 13-22, the rejection of claims 13-22 was obviated by the cancelled claims. However, the examiner then rejected claims 8-12 and claims 23-33 under 35 U.S.C. 103 (a) over Van Wyk et al. and maintained the ODP rejection since no terminal disclaimer was filed by applicants.

In response thereto, applicants filed this petition on May 16, 2008, requesting that the final Office action mailed on March 19, 2008 be entered into the above referenced application as a non-final Office action.

DISCUSSION

Applicants petitions the finality of the final Office action mailed on March 19, 2008 by arguing that the rejection of obviousness of claims 8-12 and 23-33 over Van Wyk et al. was in error since the rejection was not necessitated by applicants' amendment of the claims nor was this rejection based on information submitted in an information disclosure statement filed during the period set forth in 37 CFR 1.97 (c). Applicants also point out the examiner withdrew the 35 U.S.C. 103 (a) rejection of claims 1-12 and 23-33 over Van Wyk et al. in the previous Office action mailed September 13, 2007. Applicants further argue that the obviousness-type double patenting rejection which should have been withdrawn pursuant to MPEP 804 cannot now form the basis of making the outstanding Office action final since the provisional obviousness-type double patenting rejection has been maintained.

Applicants' argument is persuasive regarding the Van Wyk et al. reference. The examiner erred in making the Office action of March 19, 2008 final because the examiner withdraw the rejection of claims 1-12 and 23-33 under 35 U.S.C. 103 (a) over Van Wyk et al. in the Office action of September 13, 2007. By then rejecting claims 8-12 and 23-33 under 35 U.S.C. 103 (a) over Van Wyk et al. in the Office action of March 19, 2008, the examiner created a new grounds of rejection that was not necessitated by applicants' amendment of the claims nor was this rejection based on information submitted in an information disclosure statement filed during the period set forth in 37 CFR 1.97 (c). Thus, it is considered that the final Office action issued March 19, 2008 was premature and the finality of the Office action will be withdrawn.

DECISION

The petition is **GRANTED.**

This application will be forwarded to the examiner for an action not inconsistent with this decision.

Should there be any questions about this decision please contact Marianne C. Seidel, by letter addressed to Director, TC 1600, at the address listed above, or by telephone at 571-272-0584 or by facsimile sent to the general Office facsimile number, 703-872-9306.

Irem Yucel
Director, Technology Center 1600

DOCKET NO: 250550US0CONT

IN THE UNITED STATES PATENT & TRADEMARK OFFICE

IN RE APPLICATION OF	:
YUSUKE AMINO, ET AL	: EXAMINER: SHIAO, R. T.
SERIAL NO: 10/856,756	:
FILED: JUNE 1, 2004	: GROUP ART UNIT: 1626

FOR: CRYSTALS OF NON-NATURAL-TYPE STEREOISOMER SALT OF MONATIN AND USE THEREOF:

PETITION OF HOLDING OF FINALITY UNDER 37 C.F.R. §1.181

COMMISSIONER FOR PATENTS
ALEXANDRIA, VIRGINIA 22313

SIR:

Applicant hereby petition the Office's indication of finality appearing on the Office Action Summary accompanying the Office Action mailed on March 19, 2008 and on page 3 of the Office Action mailed on March 19, 2008. Applicants request that, upon review of this petition and the relevant prosecution history, this indication of finality will be withdrawn and the Office Action mailed on March 19, 2008, will be treated as a *non-final* Office Action.

The relevant facts in this case are:

1) On December 7, 2006, the Examiner issued a final rejection which set forth the following rejections:

(a) Claims 1-12 under 35 U.S.C. §102(b) over Abushanab et al (US 5,994,559) viewed with CAS: 131:351675;

(b) Claims 1-33 under 35 U.S.C. §103(a) over Abushanab et al (US 5,994,559);

(c) Claims 1-33 under 35 U.S.C. §103(a) over Van Wyk et al (US 5,128,164); and

(d) Provisional obviousness-type double patenting rejection of Claims 1-12 and 23-33 over Claims 1 and 6 of co-pending Application No. 11/180,622.

2) On May 7, 2007, Applicants filed a Notice of Appeal with a two-month extension of time.

3) On July 9, 2007, Applicants filed a Request for Reconsideration accompanied by a Declaration of Professor Jerry Atwood and a Request for Continued Examination. In the Request for Reconsideration Applicants:

(a) Specifically traversed the Examiner's rejections over Abushanab et al (US 5,994,559) and Van Wyk et al (US 5,128,164) by relying upon the option of an expert in the field of crystallography – Professor Jerry Atwood; and

(b) Requested that the provisional obviousness-type double patenting rejection over co-pending Application No. 11/180,622 be held in abeyance while reminding the Examiner of MPEP §804 stating:

> "If "provisional" ODP rejections in two applications are the only rejections remaining in those applications, the examiner should withdraw the ODP rejection in the earlier filed application thereby permitting that application to issue without need of a terminal disclaimer." The present application is the earlier filed application and, therefore, if this application is in condition for allowance prior to US 11/180,622, the obviousness-type double patenting rejection should be withdrawn.

4) On September 13, 2007, the Examiner issued a non-final rejection in which the Examiner:

(a) Found the arguments in traverse of the rejections over Abushanab et al (US 5,994,559) to be persuasive and withdrew the rejections of Claims 1-33 under 35 U.S.C. §102(b) and 35 U.S.C. §103(a) over Abushanab et al (US 5,994,559) (see paragraph 5, bridging pages 2-3);

(b) Found the arguments in traverse of the rejections over Van Wyk et al (US 5,128,164) to be persuasive in part (see lines 1-3 of paragraph 6 on page 3).

Specifically, the Examiner indicated "The rejection of claims 1-12 and 23-33 under 35 U.S.C. §103(a) over Wyk et al. '164, has been ***withdrawn*** herein. However, the rejection of claims 13-22 under 35 U.S.C. 103(a) over Wyk et al. '164, is maintained." (***emphasis added***; see lines 5-7 on page 4); and

(c) Maintained the provisional obviousness-type double patenting rejection of Claims 1-12 and 23-33 over Claims 1 and 6 of co-pending Application No. 11/180,622.

5) In recognition of the fact that following the September 13, 2007, Office Action the only rejections that remained were (i) Claims 13-22 under 35 U.S.C. §103(a) over Van Wyk et al (US 5,128,164) and (ii) provisional obviousness-type double patenting rejections of Claims 1-12 and 23-33 over Claims 1 and 6 of co-pending, but ***later filed***, Application No. 11/180,622, on December 13, 2007, Applicants filed an Amendment and Request for Reconsideration in which:

(a) The rejection of Claims 13-22 was traversed. But, solely for the purpose to expedited allowance of Claims 1-12 and 23-33, Applicants canceled Claims 13-22; and

(b) The Examiner was reminded again of the provisions of MPEP §804 with respect to the provisional obviousness-type double patenting rejection of Claims 1-12 and 23-33 over Claims 1 and 6 of co-pending Application No. 11/180,622 (see above). Applicants also provided the following statement as to the applicability of the MPEP §804 and requesting that the provisional obviousness-type double patenting rejection over US 11/180,622 be withdrawn:

> The present application has an effective filing date of November 29, 2002, while US 11/180,622 has an effective filing date of July 14, 2005. Therefore, the present application is clearly the earlier filed application. With the cancellation of the only rejected claims (i.e., Claims 13-22), the present application should be in condition for allowance at a time prior to US 11/180,622, which has not even entered substantive examination. Thus, the obviousness-type double patenting rejection should be withdrawn. An action to this effect is requested.

(c) No amendments were made to Claims 1-12 and 23-33.

6) On March 19, 2008, the Examiner issued a final rejection in which the Examiner:

(a) Acknowledged that the obviousness rejection of Claims 13-22 over Van Wyk et al (US 5,128,164) was obviated by cancellation of the aforementioned claims (see lines 1-2 of paragraph 3);

(b) Issued a ***new*** obviousness rejection of Claims 8-12 and 23-33 over Van Wyk et al (US 5,128,164) (see paragraph 3 bridging pages 2-3); and

(c) Maintained the provisional obviousness-type double patenting rejection of Claims 1-12 and 23-33 over Claims 1 and 6 of co-pending Application No. 11/180,622.

Defining when a final rejection is proper on second or subsequent action, MPEP §706.07(a) states:

> Under present practice, second or any subsequent actions on the merits shall be final, ***except*** where the examiner introduces a new ground of rejection that is neither necessitated by applicant's amendment of the claims, nor based on information submitted in an information disclosure statement filed during the period set forth in 37 CFR 1.97(c) with the fee set forth in 37 CFR 1.17(p)... (***emphasis added***)

In the present case, the provisional obviousness-type double patenting rejection of Claims 1-12 and 23-33 over Claims 1 and 6 of co-pending Application No. 11/180,622 is provisional should be withdrawn with the allowability of these claims but for this provisional ground of rejection. Accordingly, the rejection at issue is the rejection of Claims 8-12 and 23-33 as being obvious over Van Wyk et al (US 5,128,164).

On page 3, lines 3-10 of the Office Action mailed on March 19, 2008, the Examiner states "The declaration under 37 CFR 1.132 filed on July 9, 2007 is insufficient to overcome the rejection of claims 8-12 and 23-33 based upon under 35 U.S.C. 102(b) or 103(a) over Wyk et al '164 as set forth in the last Office action... The rejection of claims 8-12 and 23-33 under 35 U.S.C. 102(b) or 103(a) over Wyk et al '164 is maintained". This statement by the Examiner is factually incorrect as the Examiner did not "reject claims 8-12 and 23-33 based

upon under 35 U.S.C. 102(b) or 103(a) over Wyk et al '164 [in Office action mailed September 13, 2007]". Indeed, just the opposite is true... the Examiner specifically stated on page 4, lines 5-7 of the Office Action mailed September 13, 2007: "The rejection of claims 1-12 and 23-33 under 35 U.S.C. §103(a) over Wyk et al. '164, has been ***withdrawn*** herein. However, the rejection of claims 13-22 under 35 U.S.C. 103(a) over Wyk et al. '164, is maintained."

As the facts above illustrate, Claims 1-13 and 23-33 were acknowledged by the Examiner to be free of the disclosure of Van Wyk et al (US 5,128,164) in the non-final Office Action mailed September 13, 2007. No amendments to Claims 1-13 and 23-33 were made in the response to the Office Action mailed September 13, 2007 (see response filed on December 13, 2007).

Therefore, the rejection of Claims 8-12 and 23-33 over Van Wyk et al (US 5,128,164) is not necessitated by applicant's amendment of the claims nor was this rejection based on information submitted in an information disclosure statement filed during the period set forth in 37 CFR 1.97(c) with the fee set forth in 37 CFR 1.17(p). Accordingly, it is improper for the Examiner to make the Office Action mailed on March 19, 2008, a final Office Action.

Further, the obviousness-type double patenting rejections of Claims 1-12 and 23-33 over Claims 1 and 6 of co-pending Application No. 11/180,622 is a provisional rejection, which should be withdrawn pursuant to MPEP §804 upon the allowability of Claims 1-13 and 23-33. But for the Examiner's change of heart with respect to the allowability of Claims 8-12 and 23-33 in view Van Wyk et al (US 5,128,164), this provisional rejection would have been withdrawn. Thus, this provisional rejection cannot form the basis of making the outstanding Office Action final.

Applicants submit that this petition should be **GRANTED** and the Office Action mailed March 19, 2008, should be **Non-Final**. Early notification of such action is earnestly solicited.

Respectfully submitted,

OBLON, SPIVAK, McCLELLAND,
MAIER & NEUSTADT, P.C.
Norman F. Oblon

Stephen G. Baxter, Ph.D.
Registration No. 32,884

Vincent K. Shier, Ph.D.
Registration No. 50,552

Customer Number
22850

Tel: (703) 413-3000
Fax: (703) 413-2220
(OSMMN 08/03)

UNITED STATES PATENT AND TRADEMARK OFFICE

UNITED STATES DEPARTMENT OF COMMERCE
United States Patent and Trademark Office
Address: COMMISSIONER FOR PATENTS
P.O. Box 1450
Alexandria, Virginia 22313-1450
www.uspto.gov

APPLICATION NO.	FILING DATE	FIRST NAMED INVENTOR	ATTORNEY DOCKET NO.	CONFIRMATION NO.
10/856,756	06/01/2004	Yusuke Amino	250550US0CONT	3474

22850 7590 07/07/2009
OBLON, SPIVAK, MCCLELLAND MAIER & NEUSTADT, P.C.
1940 DUKE STREET
ALEXANDRIA, VA 22314

EXAMINER
SHIAO, REI TSANG

ART UNIT	PAPER NUMBER
1626	

NOTIFICATION DATE	DELIVERY MODE
07/07/2009	ELECTRONIC

Please find below and/or attached an Office communication concerning this application or proceeding.

The time period for reply, if any, is set in the attached communication.

Notice of the Office communication was sent electronically on above-indicated "Notification Date" to the following e-mail address(es):

patentdocket@oblon.com
oblonpat@oblon.com
jgardner@oblon.com

UNITED STATES PATENT AND TRADEMARK OFFICE

Commissioner for Patents
United States Patent and Trademark Office
P.O. Box 1450
Alexandria, VA 22313-1450
www.uspto.gov

JUL 0 7 2009

OBLON, SPIVAK, MCCLELLAND MAIER & NEUSTADT, P.C.
1940 DUKE STREET
ALEXANDRIA VA 22314

Amino et al.
Serial No.: 10/856,756
Filed: June 1, 2005
Attorney Docket No.: **250550US0CONT**

DECISION ON PETITION TO WITHDRAW THE HOLDING OF ABANDONMENT

This is in response to applicants' petition under 37 CFR. § 1.181(a) filed on February 18, 2009, requesting withdrawal of the holding of abandonment of the above-identified application based due to the fact that no "e-notification" containing the Non-Final Office Action dated June 25, 2008 was ever sent.

A review of the file history shows that the examiner mailed an Office action to applicant on June 25, 2008, setting a three-month statutory time period for reply. As the statutory period for response is up, this application is technically abandoned.

Applicants state that they did not receive "e-notification" regarding the "Non-Final" Office Action dated June 25, 2008 and provide as evidence thereof a copy of the attorney docket report where the Office action would have been entered if received, showing non-receipt of the Office action. Based on the evidence presented, it is concluded that applicants never received the e-notification regarding the Office action. In view thereof, the application will remain in to pending status with the mailing date of this decision.

Applicants also argue "Upon review of the Final Rejection issued on June 25, 2008, which was recovered from PAIR upon receipt of the January 30, 2009 Notice of Abandonment, Applicant's representative further notes that it appears the Decision Granting Petition of June 20, 2008 was not considered prior to the creation of the Final Office Action in question in this matter. Specifically, for the reasons given in the Decision Granting Petition of June 20, 2008, the Office Action that was issued on June 25, 2008, should be *non-final* upon reissuance of the same. It is respectfully requested that the Decision Granting Petition of June 20, 2008 be considered prior to the reissuance of the Office Action.

Applicants' argument regarding whether the Office action of June 25, 2008 was properly made final has been considered but it not persuasive. As a result of the petition decision of June 19, 2008, applicants' response of May 19, 2008 was entered, considered by the examiner, and then properly made final. It is pointed out, for example, that the newly added claims were entered and considered.

Applicants' petition is considered a **GRANT-IN-PART**.

Specifically, the petition is **GRANTED** as regards the withdrawal of the abandonment and **DENIED** as regards whether the action of June 25, 2008 was improperly made final.

The application will be forwarded to the examiner for prompt remailing in paper form of the final Office action of June 25, 2008.

Should there be any questions about this decision, please contact Marianne C. Seidel by letter addressed to Director, TC 1600, at the address listed above, or by telephone at 571-272-0584 or by facsimile at 703-872-9306.

Marianne C. Seidel
Quality Assurance Specialist
Technology Center 1600

UNITED STATES PATENT AND TRADEMARK OFFICE

Commissioner for Patents
United States Patent and Trademark Office
P.O. Box 1450
Alexandria, VA 22313-1450
www.uspto.gov

OGILVY RENAULT LLP
1981 MCGILL COLLEGE AVENUE
SUITE 1600
MONTREAL QC H3A2Y-3 CANADA

COPY MAILED

JAN 09 2007

OFFICE OF PETITIONS

In re Application	:	
Coelho et al.	:	NOTICE
Application No. 10/856,774	:	
Filed: 06/01/2004	:	
Attorney Docket No. 8027-59US CMB/CLB	:	

This is a notice regarding your request for acceptance of a fee deficiency submission under 37 CFR 1.28(c), filed November 21, 2006.

37 CFR 1.28(c) states: "The deficiency is based on the amount of the fee, for other than a small entity, in effect at the time the deficiency is paid in full." Accordingly, the fee deficiency submission under 37 CFR 1.28 is hereby **accepted**.

The change of status to a large entity has been entered and made of record. This Notice is not intended to imply that the USPTO conducted any investigation of this matter.

This matter is being referred to the Office of Patent Publications.

Telephone inquiries concerning this Notice may be directed to the undersigned at (571) 272-3211.

Christina Tartera Donnell

Christina Tartera Donnell
Senior Petitions Attorney
Office of Petitions

UNITED STATES PATENT AND TRADEMARK OFFICE

COMMISSIONER FOR PATENTS
UNITED STATES PATENT AND TRADEMARK OFFICE
P.O. BOX 1450
ALEXANDRIA, VA 22313-1450
www.uspto.gov

OBLON, SPIVAK, MCCLELLAND, MAIER & NEUSTADT, P.C.
1940 DUKE STREET
ALEXANDRIA VA 22314

MAILED

MAR 16 2005

DIRECTOR'S OFFICE
TECHNOLOGY CENTER 2600

In Re Application:
TERAO, NORIYUKI
Appl No. 10/856,778
Filed: June 1, 2004
Title: **METHOD AND APPARATUS FOR HIGH SPEED DATA COMPRESSION AND DECOMPRESSION**

DECIONS ON PETITION
AND
WITHDRAW FROM ISSUE FEE PAID

This is a response to Applicant's petition under 37 C.F.R. 1.181, filed on January 10, 2005, for the Office to issue a new Notice of Allowance and Issue Fee(s) Due communication, specifically requesting that the Notice of Allowability reflect that claims 44-46 are allowed instead of claims 8-10.

Petition is DISMISSED.

The above-identified application is withdrawn from issue after payment of the issue fee due unpatentability of one or more claims. See 37 CFR 1.313(b)(1).

The above-identified application is hereby withdrawn from issue.

The issue fee is refundable upon written request. If, however, the application is again found allowable, the issue fee can be applied toward payment of the issue fee in the amount identified on the new Notice of Allowance and Issue Fee Due upon written request. This request and any balance due must be received on or before the due date noted in the new Notice of Allowance in order to prevent abandonment of the application.

Telephone inquiries should be directed to David Moore, 703-308-7452.

The above-identified application is being forwarded to the examiner for prompt appropriate action, including notifying applicant of the new status of this application.

Leo Boudreau
Acting, Director TC 2600
Communications

UNITED STATES PATENT AND TRADEMARK OFFICE

Commissioner for Patents
United States Patent and Trademark Office
P.O. Box 1450
Alexandria, VA 22313-1450
www.uspto.gov

BORDEN LADNER GERVAIS LLP
WORLD EXCHANGE PLAZA
100 QUEEN STREET SUITE 1100
OTTAWA ON K1P 1J9 CA CANADA

COPY MAILED
AUG 17 2007
OFFICE OF PETITIONS

In re Patent No. 7,120,040	:	
Application No. 10/856,783	:	
Filed: June 1, 2004	:	ON PETITION
Issued: October 10, 2006	:	
Attorney Docket No. PAT 981-2	:	

This is a decision on the petition filed January 17, 2007, which is being treated as a request under 37 CFR 3.81(b)[1] to correct the name of the assignee on the front page of the above-identified patent by way of a Certificate of Correction.

The request is **GRANTED**.

The patent file is being forwarded to the Certificates of Correction Branch for issuance of the requested Certificate of Correction.

Telephone inquiries concerning this decision may be directed to Petitions Examiner Liana Walsh at (571) 272-3206. Inquiries regarding the issuance of a certificate of correction should be directed to the Certificate of Correction Branch at (571) 272-4200.

Liana Walsh for
Frances Hicks
Petitions Examiner
Office of Petitions

[1] *See* MPEP 1309, subsection II; and Official Gazette of June 22, 2004.

UNITED STATES PATENT AND TRADEMARK OFFICE

Commissioner for Patents
United States Patent and Trademark Office
P.O. Box 1450
Alexandria, VA22313-1450
www.uspto.gov

FITZPATRICK CELLA HARPER & SCINTO
30 ROCKEFELLER PLAZA
NEW YORK NY 10112

COPY MAILED

AUG 0 6 2007

OFFICE OF PETITIONS

In re Application of
Takuya Kotani
Application No. 10/856,802
Filed: June 1, 2004
Attorney Docket No: 00862.018166.

ON PETITION

This is a decision on the petition to withdraw the holding of abandonment, filed June 20, 2007, which is being treated under 37 CFR 1.181, in accordance with the reasoning of the decision in Delgar Inc. v. Schuyler, 172 USPQ 513.

The petition is **GRANTED**.

This application became abandoned on October 11, 2006, for failure to file a timely response to the non-Final Office Action mailed July 10, 2006, which set a three (3) month statutory period for reply. Accordingly, a Notice of Abandonment was mailed March 23, 2007. Petitioner asserts that the non-Final Office Action was never received.

The file record discloses that the Office Action was mailed to the address of record which is the same address used on all correspondences from the USPTO including the Notice of Abandonment. Petitioner has provided a copy of the docket to show that the Office Action mailed July 10, 2006 was not received. Petitioner also explains that after searching the file and docket records, where receipt of the office action would have been indicated if it had been received, it was concluded that no correspondence was received for this matter from the USPTO.

In that the statement from the petitioner and the exhibit from the docket record for the instant matter show no entry indicating receipt of the non-Final Office Action mailed July 10, 2006, it is apparent that it was not received. The evidence submitted corroborates non-receipt of the Office Action.

In view of the facts set forth in the petition, it is concluded that the Office Action was never received at the address of record. Accordingly, the holding of abandonment is withdrawn and no petition fee is due.

This matter is being referred to Technology Center 2165 for a re-mailing of the non-Final Office Action and for a restarting of the period for response.

Telephone inquiries concerning this matter should be directed to the undersigned Petitions Attorney at (571) 272-3212.

Patricia Faison-Ball

Patricia Faison-Ball
Senior Petitions Attorney
Office of Petitions

10 856 835

SPE RESPONSE FOR CERTIFICATE OF CORRECTION

Paper No.:200604

DATE : April 3, 2006

TO SPE OF : ART UNIT 2878

SUBJECT : Request for Certificate of Correction on Patent No.: 6,881,945

A response is requested with respect to the accompanying request for a certificate of correction.

Please complete this form and return with file, within **7** days to:
Certificates of Correction Branch - PK 3-910
Palm location **7590** - Tel. No. 305-8201

With respect to the change(s) requested, correcting Office and/or Applicant's errors, should the patent read as shown in the certificate of correction? No new matter should be introduced, nor should the scope or meaning of the claims be changed.

Thank You For Your Assistance **Certificates of Correction Branch**

The request for issuing the above-identified correction(s) is hereby:
Note your decision on the appropriate box.

☒ **Approved** **All** changes apply.

☐ **Approved in Part** Specify below which changes **do not** apply.

☐ **Denied** State the reasons for denial below.

Comments:

Georgia Y. Epps

SPE: Georgia Y. Epps **Art Unit** 2878

SPE RESPONSE FOR CERTIFICATE OF CORRECTION

Paper No.: _____

DATE : 3/13/09

TO SPE OF : ART UNIT 2863 Kundu, Sujoy

SUBJECT : Request for Certificate of Correction for Appl. No.: 10/856893 Patent No.: 7292949

Please respond to this request for a certificate of correction within 7 days.

FOR IFW FILES:

Please review the requested changes/corrections as shown in the **COCIN** document(s) in the IFW application image. No new matter should be introduced, nor should the scope or meaning of the claims be changed.

Please complete the response (see below) and forward the completed response to scanning using document code **COCX**.

FOR PAPER FILES:

Please review the requested changes/corrections as shown in the attached certificate of correction. Please complete this form (see below) and forward it with the file to:

Certificates of Correction Branch (CofC)
South Tower - 9A22
Palm Location 7580

Certificates of Correction Branch
703-308-9390 ext. _____

Thank You For Your Assistance

The request for issuing the above-identified correction(s) is hereby:
Note your decision on the appropriate box.

- ☒ **Approved** — All changes apply.
- ☐ **Approved in Part** — Specify below which changes **do not** apply.
- ☐ **Denied** — State the reasons for denial below.

Comments: ok

DREW A. DUNN
SUPERVISORY PATENT EXAMINER

SPE

2863
Art Unit

UNITED STATES PATENT AND TRADEMARK OFFICE

UNITED STATES DEPARTMENT OF COMMERCE
United States Patent and Trademark Office
Address: COMMISSIONER FOR PATENTS
P.O. Box 1450
Alexandria, Virginia 22313-1450
www.uspto.gov

HONEYWELL/IFL
Patent Services
101 Columbia Road
P.O.Box 2245
Morristown, NJ 07962-2245

Mail Date: 04/20/2010

Applicant	: David B. Dwyer	: DECISION ON REQUEST FOR
Patent Number	: 7603209	: RECALCULATION of PATENT
Issue Date	: 10/13/2009	: TERM ADJUSTMENT IN VIEW
Appliction No	: 10/856,891	: OF WYETH AND NOTICE OF INTENT TO
Filed	: 05/27/2004	: ISSUE CERTIFICATE OF CORRECTION
		:

The Request for Recalculation is **GRANTED** to the extent indicated.

The patent term adjustment has been determined to be **1008** days. The USPTO will *sua sponte* issue a certificate of correction reflecting the amount of PTA days determined by the recalculation.

Prior to the issuance of the certificate of correction, the USPTO will afford patentee an opportunity to be heard and request reconsideration. Accordingly, patentee has **one month or thirty (30) days**, whichever is longer, to file a request for reconsideration of this patent term adjustment calculation. See 35 U.S.C. 154(b)(3)(B)(ii) and 37 CFR 1.322(a)(4). No extensions of time will be granted under 37 CFR 1.136.

Patentee should use document code PET.OP if electronically filing a request for reconsideration of this patent term adjustment calculation. The patentee must also include the information required by 37 CFR 1.705(b)(2) and the fee required by 37 CFR 1.18(e). If patentee does not file a timely request for reconsideration of this patent term adjustment calculation including the information required by 37 CFR 1.705(b)(2) and the fee required by 37 CFR 1.18(e), the USPTO will issue a certificate of correction reflecting the PTA determination noted above.

Patentee should be aware that in order to preserve the right to review in the United States District Court for the District of Columbia of the USPTO patent term adjustment determination, patentee must ensure that he or she also take the steps required under 35 U.S.C. 154(b)(4)(A) in a timely manner. Nothing in the request for recalculation should be construed as providing an alternative time frame for commencing a civil action under 35 U.S.C. 154(b)(4)(A).

Any questions concerning this decision should be directed to the Office of Patent Legal Administration at 571-272-7702.

Ex. P. Assouad

SPE RESPONSE FOR CERTIFICATE OF CORRECTION

Paper No.: _____

DATE : 5/10/07

TO SPE OF : ART UNIT 2857

SUBJECT : Request for Certificate of Correction for Appl. No.: 10/856,907 Patent No.: 7024324

Please respond to this request for a certificate of correction within 7 days.

Please review the requested changes/corrections as shown in the **COCIN** document(s) in the IFW application image. No new matter should be introduced, nor should the scope or meaning of the claims be changed.

Please complete the response (see below) and forward the completed response to scanning using document code **COCX**.

Lamonte M. Newsome
Certificates of Correction Branch
703-308-9390 ext. 112

Thank You For Your Assistance

The request for issuing the above-identified correction(s) is hereby:

Note your decision on the appropriate box.

- [x] **Approved** — All changes apply.
- [ ] **Approved in Part** — Specify below which changes **do not** apply.
- [ ] **Denied** — State the reasons for denial below.

Comments: _____

PATRICK ASSOUAD
SUPERVISORY PATENT EXAMINER

Patrick Assouad — SPE

2809 — Art Unit

UNITED STATES PATENT AND TRADEMARK OFFICE

Commissioner for Patents
United States Patent and Trademark Office
P.O. Box 1450
Alexandria, VA 22313-1450
www.uspto.gov

Pepper Hamilton LLP
Firm 21269
50th Floor
500 Grant Street, One Mellon Center
Pittsburgh, PA 15219

COPY MAILED

MAR 1 1 2005

OFFICE OF PETITIONS

ON PETITION

In re Application of :
Driscoll et al. :
Application No. 10/856,908 :
Filed: May 28, 2004 :
Attorney Docket No. ETS-0203 :

This is a decision on the petition filed October 22, 2004, requesting entry of 3 sheets of drawings as part of the original application.

The petition is **dismissed**.

On May 28, 2004, the instant application was filed without Figures 26A-C. A Notice to File Corrected Application Papers was mailed on August 16, 2004. It stated that a filing date of May 28, 2004, had been accorded and gave petitioner three options:

(1) File a petition, petition fee, and evidence establishing that the missing drawingswere application submitted to the PTO.
(2) File a petition, petition fee, the drawings, and request a filing date as of the date that the petition and missing Figure(s) are submitted.
(3) Accept the application as deposited.

Petitioner apparently has chosen option (3).

The petition does not state that the drawings submitted on October 22, 2004, were present at the time the original application was submitted. Petitioner does not request a filing date of October 22, 2004 (the date the drawings were supplied). Instead, petitioner simply seeks to amend the application to include the drawings. However, no petition is necessary for that purpose. New drawings may be entered by an examiner without petition so long as the drawings contain no new matter. See MPEP 608.02(a). Accordingly, the petition is inappropriate and is subject to dismissal.

The drawing(s) filed with the petition are withdrawn and will <u>not</u> be entered or used during the prosecution of this application. However, petitioner may resubmit the drawings as part of a preliminary amendment and such an amendment will be considered by the examiner for entry of new matter not described in the application as filed.

The original application papers will include only those application papers present on the date of deposit.

Since the present petition was not necessitated by any error on the part of the Office, the $130.00 petition fee will not be refunded.

Petitioner may wish to note that Office records fail to indicate receipt of corrected drawings in response to the Notice mailed August 16, 2004.

The Office of Initial Patent Examination will process the application with a filing date of May 28, 2004, using only the application papers filed on May 28, 2004.

Telephone inquiries should be directed to Petitions Attorney Steven Brantley at (703) 306-5683.

Charles Steven Brantley
Senior Petitions Attorney
Office of Petitions

UNITED STATES PATENT AND TRADEMARK OFFICE

COMMISSIONER FOR PATENTS
UNITED STATES PATENT AND TRADEMARK OFFICE
P.O. BOX 1450
ALEXANDRIA, VA 22313-1450
www.uspto.gov

KOLISCH HARTWELL, P.C.
520 S.W. YAMHILL STREET
SUITE 200
PORTLAND, OR 97204

COPY MAILED

FEB 24 2005

OFFICE OF PETITIONS

In re Application of	:
Simko, et al.	: DECISION GRANTING STATUS
Application No. 10/856,920	: UNDER 37 CFR 1.47(a)
Filed: May 28, 2004	:
Atty. Dkt. No.: SMTTT 305	:
For: REINFORCED COMPOSITE	:
STRUCTURAL MEMBERS AND METHODS	:
OF MAKING THE SAME	:

This decision is in response to the petition under 37 CFR 1.47(a), filed January 31, 2005.

The petition is **GRANTED**.

Petitioner has shown that inventor Carlos M. Almeida has refused to execute the declaration for the above-identified application after having been presented with the application papers.

The above-identified application and papers have been reviewed and found in compliance with 37 CFR 1.47(a). This application is hereby accorded Rule 1.47(a) status.

As provided in Rule 1.47(c), this Office will forward notice of this application's filing to the non-signing inventors at the addresses given in the petition. Notice of the filing of this application will also be published in the Official Gazette.

After this decision is mailed, the above-identified application will be returned to the Office of Initial Patent Examination for further processing.

Telephone inquiries regarding this decision should be directed to the undersigned at (571) 272-3205.

Alesia M. Brown
Petitions Attorney
Office of Petitions

UNITED STATES PATENT AND TRADEMARK OFFICE

Commissioner for Patents
United States Patent and Trademark Office
P.O. Box 1450
Alexandria, VA 22313-1450
www.uspto.gov

QUALCOMM INC
PATENT DEPARTMENT
5775 MOREHOUSE DR
SAN DIEGO CA 92121-1714

COPY MAILED

OCT 0 1 2004

OFFICE OF PETITIONS

In re Application of Brendan Brett and Maria I. Marshall Application No. 10/856,928 Filed: May 27, 2004 Attorney Docket No. 030578	DECISION REFUSING STATUS UNDER 37 CFR 1.47(a)

This is in response to the petition under 37 CFR 1.47(a), filed August 23, 2004.

The petition under 37 CFR 1.47(a) is **DISMISSED**.

Rule 47 applicant is given **TWO MONTHS** from the mailing date of this decision to reply, correcting the below-noted deficiencies. Any reply should be entitled "Request for Reconsideration of Petition Under 37 CFR 1.47(a)," and should only address the deficiencies noted below, except that the reply may include an oath or declaration executed by the non-signing inventor. **Failure to respond will result in abandonment of the application.** Any extensions of time will be governed by 37 CFR 1.136(a).

The above-identified application was filed on May 27, 2004. On August 2, 2004, applicant was mailed a "Notice to File Missing Parts of Nonprovisional Application - Filing Date Granted," requiring an executed oath or declaration (and a surcharge for its late filing). This Notice set a two-month period for reply.

In reply, applicant filed the instant petition on August 23, 2004. Accompanying the petition was a declaration twice executed by inventor Maria Marshall, in her signature block and in the signature block of Brendan Brett.

A grantable petition under 37 CFR 1.47(a) requires: (1) proof that the non-signing inventor cannot be reached after diligent effort or refuses to sign the oath or declaration after having been presented with the application papers (specification, claims, drawings, oath or declaration); (2) an acceptable oath or declaration in compliance with 37 CFR 1.63; (3) the petition fee; and (4) a statement of the last known address of the non-signing inventor. Rule 47 applicant has not met requirements (1) and (2) above.

As to requirement (1), the petition has been carefully considered. However, applicant has not demonstrated diligent effort in finding the non-signing inventor. With respect to showing diligent effort, "an affidavit or declaration of facts should be submitted that **fully describes the exact facts** which are relied on to establish that a diligent effort was made."[1] Here, petitioner has provided no information other than that "Brendan Brett is on active military duty and will not be back in the United States until April, 2005. His current location is unknown." Applicant has not provided any details of the efforts taken to locate Brett. In addition, applicant has provided no documentary evidence, such as a certified mail return receipt or copies of an internet search.[2]

As to requirement (2), the signature block for inventor Brett should be left blank. A declaration with a blank signature block for the nonsigning inventor will be treated as having been signed by all the available joint inventors on behalf of the nonsigning inventor.[3]

Further correspondence with respect to this matter should be addressed as follows:

By mail: Mail Stop Petitions
Commissioner for Patents
P.O. Box 1450
Alexandria VA 22313-1450

By FAX: (703) 872-9306
Attn: Office of Petitions

Telephone inquiries regarding this decision should be directed to the undersigned at (571)272-3207.

Cliff Congo
Petitions Attorney
Office of Petitions

---

[1] MPEP 409.03(d) (emphasis added).

[2] Such documentary evidence should be made part of the affidavit or declaration. See id.

[3] See MPEP 409.03(a).

UNITED STATES PATENT AND TRADEMARK OFFICE

Commissioner for Patents
United States Patent and Trademark Office
P.O. Box 1450
Alexandria, VA 22313-1450
www.uspto.gov

QUALCOMM INC
PATENT DEPARTMENT
5775 MOREHOUSE DR
SAN DIEGO CA 92121-1714

COPY MAILED

DEC 15 2004

OFFICE OF PETITIONS

In re Application of Brendan Brett and Maria I. Marshall Application No. 10/856,928 Filed: May 27, 2004 Attorney Docket No. 030578	DECISION NOTING JOINDER OF INVENTOR AND PETITION UNDER 37 CFR 1.47(A) MOOT

This is in response to the petition under 37 CFR 1.47(a), filed November 15, 2004.

The above-identified application was filed on May 27, 2004. On August 2, 2004, applicant was mailed a "Notice to File Missing Parts of Nonprovisional Application - Filing Date Granted," requiring an executed oath or declaration (and a surcharge for its late filing). This Notice set a two-month period for reply.

In reply, applicant filed a petition under 37 CFR 1.47(a)on August 23, 2004. However, the petition was dismissed in a decision mailed on October 1, 2004.

In view of the **joinder** of the inventor, further consideration under 37 CFR 1.47(a) is not necessary and the petition is considered to be **moot**. This application does <u>not</u> have any Rule 1.47(a) status and no such status should appear on the file wrapper. This application need not be returned to this Office for further consideration under 37 CFR 1.47(a).

The application file is being forwarded to the Office of Initial Patent Examination for pre-examination processing.

Telephone inquiries regarding this decision should be directed to the undersigned at (571)272-3207.

Cliff Congo
Petitions Attorney
Office of Petitions

UNITED STATES PATENT AND TRADEMARK OFFICE

Commissioner for Patents
United States Patent and Trademark Office
P.O. Box 1450
Alexandria, VA 22313-1450
www.uspto.gov

MAIL

MAY 1 0 2006

DIRECTOR OFFICE
TECHNOLOGY CENTER 2600

WENDEROTH, LIND & PONACK, L.L.P.
2033 K STREET N. W.
SUITE 800
WASHINGTON DC 20006-1021

In re Application of
KUWAJIMA, HIDEKI, et al.
Application No. 10/856,943
Filed: June 1, 2004
For: **DISK DRIVE**

DECISION ON PETITION
TO MAKE SPECIAL

This is a decision on the petition filed April 18, 2006 under Manual of Patent Examination Procedure §708.02, VIII requesting accelerated examination.

The petition under Manual of Patent Examination Procedure §708.02, VIII, must:
(1) be filed prior to receiving any examination by the examiner,
(2) be accompanied by the required fee- $130,
(3) the claims should be directed to a single invention (if it is determined that the claims pertain to more than one invention, then applicant will have to make an election without traverse or forfeit accelerated examination status),
(4) state that a pre-examination search was made, and fully discuss the search method employed, such as classes and subclasses searched, publications, Chemical abstracts, patents, etc. A search made by a foreign patent office satisfies this requirement,
(5) be accompanied by a copy of each of the references most closely related to the subject matter encompassed by the claims if said references are not already of record,
(6) fully discuss the references, pointing out with the particularity required by 37 C.F.R. §1.111 (b) and (c), how the claimed subject matter is patentable over the references.

The petitioner meets all the above-listed requirements. Accordingly, the petition is **GRANTED**.

The application will retain its special status throughout its entire prosecution, including any appeal to the Board of Patent Appeals and Interferences, subject only to diligent prosecution by the applicant. The application file is being forwarded to the examiner for appropriate action in due course.

Kenneth A. Wieder
Special Program Examiner
Technology Center 2600
Communications

UNITED STATES PATENT AND TRADEMARK OFFICE

Commissioner for Patents
United States Patent and Trademark Office
P.O. Box 1450
Alexandria, VA 22313-1450
www.uspto.gov

JAMES J. MULLEN
M. SUSAN SPIERING CELANESE LTD.
IP LEGAL DEPT, IZIP 701
P.O. BOX 428, HWY 77 S
BISHOP, TX 78343

COPY MAILED
MAY 0 1 2006
OFFICE OF PETITIONS

In re Application of Pinschmidt :
Application No. 10/856,951 : Decision on Petition
Filing Date: February 6, 2002 :
Attorney Docket No. A5771DIV :

This is a decision on the petition filed September 1, 2005, under 37 CFR 1.181 to withdraw the holding of abandonment of the above-identified application. The petition will also be treated as a petition under 37 CFR 1.53 to accord the application a filing date of February 6, 2002.

The petition under 37 CFR 1.181 is **dismissed as moot**.

The petition under 37 CFR 1.53 is **dismissed**.

Facts:

Application No. 09/157,231 was filed on September 18, 1998.

In response to a final Office action, petitioner filed a Continued Prosecution Application on April 5, 2001.

A non-final Office action was mailed on July 3, 2001. The Office action stated in part,

> [C]laims 2-4 and 22-25 would be allowable if rewritten, amended and/or satisfactorily rebutted so as to obviate the 112, first paragraph issue.

Petitioner filed an amendment on August 17, 2001. All claims other than claims 2-4 and 22-25 were cancelled. Claims 2-4 and 22-25 were amended.

A Notice of Allowance was mailed November 19, 2001. An examiner's amendment mailed with the Notice of Allowance states, "Authorization for this examiner's amendment was given in a telephone interview with Mr. Michael W. Ferrell on November 15, 2001." Per the amendment, lines 4 and 5 on page 1 were deleted in their entirety in order to "remove superfluous subject matter."

Petitioner has provided a showing in compliance with 37 CFR 1.8(b) demonstrating a "Continued Prosecution Application (CPA) Request Transmittal" was filed on February 6, 2002, along with other papers including a specification, claims, abstract, and preliminary amendment. The papers filed on February 6, 2002, were misplaced and not matched with the application file for application no. 09/157,231.

On February 7, 2002, the issue fee and issue fee transmittal sheet were mailed to the Office for application no. 09/157,231.

Application no. 09/157,231 issued as patent no. 6,391,992 on May 21, 2002.

On or about June of 2004, petitioner supplied the Office with a copy of the papers filed on February 7, 2002. The Office accorded these papers application no. 10/856,951, and gave them a filing date of February 6, 2002.

A Notice to File Missing Parts was mailed on October 18, 2004. The Notice stated the application was missing an oath or declaration and an executed oath or declaration, along with payment of a surcharge, must be supplied within the time period on the notice or the application would become abandoned.

Petitioner filed a reply to the Notice to File Missing Parts on November 2, 2004. The reply stated that an oath or declaration is unnecessary for divisional applications. The reply did not include an oath or declaration.

The Office mailed a Notice of Abandonment on July 18, 2005.

The instant petition was filed on September 1, 2005. The petition contends the application is not abandoned because a new oath or declaration is unnecessary for a CPA.

Discussion:

The application should not have been assigned an application number. Therefore, the application is not abandoned.

If the February 6, 2002 "CPA" had been received and matched with the file, it would have been entered as a CPA since CPA practice no longer applied to application no. 09/157,231. As stated in MPEP 706.07(h) at that time,

> 37 CFR 1.53(d)(1)(i) has been amended to provide that CPA practice under 37 CFR 1.53(d) does **not** apply to applications (other than design) if the prior application has a filing date on or after May 29, 2000. Thus, an application (except for a design application) must have an actual filing date **before** May 29, 2000 for the applicant to be able to file a CPA of that application. While the Office uses the filing date (and application number) of the prior application of a CPA for identification purposes, the filing date of a CPA under 37 CFR 1.53(d) is the date the request for a CPA is filed. See 37 CFR 1.53(d)(2). Thus, if a CPA of an application (other than for a design patent) is

> filed on or after May 29, 2000, 37 CFR 1.53(d)(1)(i) does not permit the filing of a further CPA, regardless of the filing date of the prior application as to the first CPA (*i.e.*, the filing date used for identification purposes for the CPA).

Since a CPA could not be filed for application no. 09/157,231, the papers filed on February 6, 2002, would have been treated as a RCE. At that time, MPEP 706.07(h) stated in part,

> In the event that an applicant files a request for a CPA of a utility or plant application that was filed on or after May 29, 2000 (to which CPA practice no longer applies), the Office will automatically treat the improper CPA as an RCE of the prior application (identified in the request for CPA) under 37 CFR 1.114. If the CPA does not satisfy the requirements of 37 CFR 1.114 to be a proper RCE (e.g., lacks a submission under 37 CFR 1.114(b), or is not accompanied by the fee set forth in 37 CFR 1.17(e)), the improper CPA will still be treated as an RCE (albeit an improper RCE), and the time period set in the last Office action (or notice of allowance) will continue to run.

The RCE would have been treated as an improper RCE. A proper RCE must be accompanied by a submission. The only "submission" filed with the RCE was a preliminary amendment. At the time the RCE/CPA was filed, the <u>only</u> pending claims were claims 2-4 and 22-25. The preliminary amendment stated, "Please cancel claims 1-4 and 22-25 in the parent application (allowed in a Continuation application of the original application)." The preliminary amendment filed February 6, 2002, was an improper submission requested an action that would have resulted in the cancellation of all pending claims.

The RCE would not have nullified the current outstanding Notice of Allowance. As previously quoted from MPEP 706.07(h), when an improper RCE is filed, "the time period set in the last Office action (or notice of allowance) will continue to run."

After the filing of the improper RCE, the time period set forth in the November 19, 2001 Notice of Allowance continued to run. Although the improper RCE was an improper reply to the Notice of Allowance, a proper reply was timely filed. The day after mailing the RCE, petitioner mailed the issue fee and issue fee transmittal form. As a result, the application issued as a patent on May 21, 2002. The Office notes the 3.5 year maintenance fee for the patent was paid on November 11, 2005.

A review of the entire record demonstrates that petitioner, in essence, has simply provided a showing in compliance with 37 CFR 1.8(b) establishing an improper "RCE" was filed in application no. 09/157,231. The record fails to indicate the improper RCE was entitled to be assigned a new application number. Therefore, application no. 10/856,951 will no longer be an active application number. Since all proceedings for the application have been terminated, the petition to withdraw the holding of abandonment is moot.

Any request for reconsideration must be submitted within TWO (2) MONTHS from the mail date of this decision. Extensions of time under 37 CFR 1.136(a) are NOT permitted.

Telephone inquiries regarding this communication should be directed to Petitions Attorney Steven Brantley at (571) 272-3203.

Charles Steven Brantley
Senior Petitions Attorney
Office of Petitions

UNITED STATES PATENT AND TRADEMARK OFFICE

Commissioner for Patents
United States Patent and Trademark Office
P.O. Box 1450
Alexandria, VA 22313-1450
www.uspto.gov

JAMES J. MULLEN
M. SUSAN SPIERING CELANESE LTD.
IP LEGAL DEPT., IZIP 701
P.O. BOX 428, HWY 77 S
BISHOP TX 78343

COPY MAILED

MAY 22 2007

OFFICE OF PETITIONS

In re Application of	:	
Robert Krantz Pinschmidt Jr.	:	
Application No. 10/856,951	:	DECISION ON PETITION
Filed: February 6, 2002	:	
Attorney Docket No. A5771DIV	:	

This is a decision on the petition filed on June 28, 2006, and resubmitted on July 3, 2006, requesting that the Office acknowledge the above-identified application as a divisional application under 37 CFR 1.53(b) instead of an improper Continued Prosecution Application (CPA) under 37 CFR 1.53(d) with a filing date of February 6, 2002. Additionally, applicants requested that the Office withdraw the holding of abandonment in the instant application.

On November 19, 2001, a Notice of Allowance and Fee(s) Due and a Notice of Allowability were mailed in application No. 09/157,231, which set a three (3) month statutory period for reply. In response, on February 25, 2002, applicants paid the issue and publication fees.

In a communication dated February 19, 2004, applicants asserted that they submitted a request for "a CPA for Divisional Application" based on prior application No. 09/157,231 by facsimile transmission. Applicants indicated that they were resubmitting the documents, and included a copy of the Auto-Reply Facsimile Transmission, showing that 6 pages, including a certificate of transmission by facsimile, were received in the USPTO on February 6, 2002.[1] Unfortunately, the request for a CPA and the accompanying documents were not located in the USPTO.

On May 21, 2002, application No. 09/157,231 issued as U.S. Patent No. 6,391,992. On May 28, 2004, applicants resubmitted a copy of the CPA and related documents to USPTO via Federal Express Shipping. Thereafter, the Office of Initial Patent Examination ("OIPE") processed the papers as a divisional application under 37 CFR 1.53(b) and assigned it an application number, No. 10/856,951.

[1] There is sufficient evidence in accordance with 37 CFR 1.6(f) to show that the USPTO received the CPA by facsimile transmission on February 6, 2002.

On October 18, 2004, the Office of Initial Patent Examination mailed a Notice to File Missing Parts of Nonprovisional Application in Application No. 10/856,951, stating that an application number and filing date had been accorded to the application; however, the oath or declaration was missing. Applicants were given a two (2) month extendable period from the mail date of the Notice within which to file an oath or declaration and pay a $130.00 surcharge for its late filing. On July 18, 2005, the Office mailed a Notice of Abandonment, indicating that the application was abandoned for failure to submit a timely and proper reply to the Notice to File Missing Parts mailed on October 18, 2004. On September 1, 2005, applicant filed a petition to withdraw the holding of abandonment, which was dismissed by the decision of May 1, 2006. On June 28, 2006, and again on July 3, 2006, applicants filed the present petition.

The Office notes that at the time the CPA was filed on February 6, 2002, CPA practice no longer applied to applications, other than design applications, if the prior application was filed on or after May 29, 2000. Accordingly, the CPA request was improper because the prior application was filed on or after May 29, 2000.[2]

In the event that an applicant files a request for a CPA that does not meet the requirements of 37 CFR 1.53(d) because the application is not a design application, and the application was filed on or after June 8, 1995, the request for a CPA will be treated as an RCE under 37 CFR 1.114. The Office will no longer convert an improper CPA to an application under 37 CFR 1.53(b) simply because an applicant requests it. The Office will convert an improper CPA to an application under 37 CFR 1.53(b) only if applicant demonstrates that "there are extenuating circumstances that warrant the burdensome process of converting a CPA into an application under Sec. 1.53(b) (e.g., restoring the application to pending status and correcting the improper RCE is not possible because the application has issued as a patent)." *Elimination of Continued Prosecution Application Practice as to Utility and Plant Patent Applications, 68 FR 32376 (May 30, 2003), 1271 Off. Gaz. Pat. Office 143 (June 24, 2003) (final rule).*

Upon further review, extenuating circumstances exist that warrant the process of converting the CPA to an application under 37 CFR 1.53(b). Accordingly, the petition is **granted.**

When filing a CPA, an applicant is not required to submit a copy of the oath or declaration filed in the parent nonprovisional application. Therefore, the Office erroneously mailed the Notice to File Missing Parts requiring the submission of an executed oath or declaration in the CPA filed on February 6, 2002. The Notice to Filing Missing Parts mailed on October 18, 2004, is hereby vacated. As the Notice to File Missing Parts was mailed in error, the holding of abandonment is hereby withdrawn. However, since the application is being converted to an application under 37 CFR 1.53(b), a copy of the declaration filed in the prior application is needed. Therefore, the Office has made a photocopy of the declaration of the prior application as originally filed to expedite the processing of this divisional application and prevent further delay. Additionally, the Office will charge the Deposit Account for the $400.00 petition fee.

[2] Effective July 14, 2003, the Office eliminated CPA practice as to utility and plant applications. *See Elimination of Continued Prosecution Application Practice as to Utility and Plant Patent Applications, 68 FR 32376 (May 30, 2003), 1271 Off. Gaz. Pat. Office 143 (June 24, 2003) (final rule).*

This matter will be referred to the Office of Initial Patent Examination for further processing as a pending divisional application of prior filed application No. 09/157,231, with a filing date of February 6, 2002.

Telephone inquiries concerning this matter may be directed to Senior Petitions Attorney Christina Tartera Donnell at (571) 272-3211.

Eugenia A. Jones

Eugenia A. Jones
Senior Legal Advisor
Office of Patent Legal Administration
Office of the Deputy Commissioner
for Patent Examination Policy

UNITED STATES PATENT AND TRADEMARK OFFICE

Commissioner for Patents
United States Patent and Trademark Office
P.O. Box 1450
Alexandria, VA 22313-1450
www.uspto.gov

EGBERT LAW OFFICES
412 MAIN STREET, 7TH FLOOR
HOUSTON, TX 77002

COPY MAILED

FEB 16 2007

OFFICE OF PETITIONS

In re Application of :
Ming-Hsiao Lai :
Application No. 10/856,952 : ON PETITION
Filed: June 1, 2004 :
Attorney Docket No. 4-1058 :

This is a decision on the petition filed, September 21, 2006 under 37 CFR 1.137(b), to revive the above-identified application.

The petition is **GRANTED.**

The above-identified application became abandoned for failure to reply within the meaning of 37 CFR 1.113 in a timely manner to the final Office action mailed January 4, 2006, which set a shortened statutory period for reply of three (3) months. No extension of time under the provisions of 37 CFR 1.136(a) were obtained. Accordingly, the above-identified application became abandoned on April 5, 2006.

The above-identified application is being revived solely for purposes of continuity with a Request For Continued Examination (RCE) filed on September 21, 2006.

Telephone inquiries concerning this decision should be directed to Irvin Dingle at (571) 272-3210.

This matters is being referred to Technology Center AU 3728 for further processing.

Irvin Dingle
Petitions Examiner
Office of Petitions

UNITED STATES PATENT AND TRADEMARK OFFICE

Commissioner for Patents
United States Patent and Trademark Office
P.O. Box 1450
Alexandria, VA 22313-1450
www.uspto.gov

JONATHAN P. OSHA
OSHA LIANG LLP
1221 McKINNEY STREET, SUITE 2800
HOUSTON, TX 77010

COPY MAILED

DEC 28 2006

OFFICE OF PETITIONS

In re Application of	:	
Tatsuya Kita	:	
Application No. 10/856,959	:	DECISION GRANTING PETITION
Filed: May 28, 2004	:	UNDER 37 CFR 1.313(c)(2)
Attorney Docket No. 04995/148001	:	

This is a decision on the petition, filed December 26, 2006, under 37 CFR 1.313(c)(2) to withdraw the above-identified application from issue after payment of the issue fee.

The petition is **GRANTED**.

The above-identified application is withdrawn from issue for consideration of a submission under 37 CFR 1.114 (request for continued examination). See 37 CFR 1.313(c)(2).

Petitioner is advised that the issue fee paid on December 13, 2006 in the above-identified application cannot be refunded. If, however, the above-identified application is again allowed, petitioner may request that it be applied towards the issue fee required by the new Notice of Allowance.[1]

Telephone inquiries should be directed to the undersigned at (571) 272-3218.

This matter is being referred to Technology Center AU 2622 for processing of the request for continued examination under 37 CFR 1.114 and for consideration of the Information Disclosure Statement.

Frances Hicks
Petitions Examiner
Office of Petitions

C:\Documents and Settings\FHicks\My Documents\470\Dec10\856959.wpd

---

[1] *The request to apply the issue fee to the new Notice may be satisfied by completing and returning the new Part B – Fee(s) Transmittal Form (along with any balance due at the time of submission). Petitioner is advised that the Issue Fee Transmittal Form must be completed and timely submitted to avoid abandonment.*

UNITED STATES PATENT AND TRADEMARK OFFICE

Commissioner for Patents
United States Patent and Trademark Office
P.O. Box 1450
Alexandria, VA 22313-1450
www.uspto.gov

TEXAS INSTRUMENTS INCORPORATED
P O BOX 655474, M/S 3999
DALLAS, TX 75265

COPY MAILED
OCT 16 2006
OFFICE OF PETITIONS

In re Application of	:
Andrew G. Huibers	:
Application No. 10/857,059	: DECISION GRANTING PETITION
Filed: May 28, 2004	: UNDER 37 CFR 1.137(b)
Attorney Docket No. P167-US	:

This is a decision on the petition under 37 CFR 1.137(b), filed January 26, 2006, to revive the above-identified application.

The petition is **GRANTED**.

This application became abandoned for failure to timely submit corrected drawings on or before November 21, 2005, as required by the Notice of Allowability (Notice) mailed August 19, 2005. A Notice of Abandonment was mailed on January 6, 2006.

The petition satisfies the conditions for revival pursuant to the provisions of 37 CFR 1.137(b) in that (1) the reply (drawings), (2) the $750 petition fee, and (3) the required statement of unintentional delay have been received. Accordingly, the reply to the Notice of August 29, 2005 is accepted as having been unintentionally delayed.

Telephone inquiries concerning this decision should be directed to the undersigned at (571) 272-3218.

This matter is being referred to Publishing Division.

Frances Hicks
Petitions Examiner
Office of Petitions

UNITED STATES PATENT AND TRADEMARK OFFICE

Commissioner for Patents
United States Patent and Trademark Office
P.O. Box 1450
Alexandria, VA 22313-1450
www.uspto.gov

GREENBERG TRAURIG LLP (LA)
2450 COLORADO AVENUE, SUITE 400E
INTELLECTUAL PROPERTY DEPARTMENT
SANTA MONICA CA 90404

MAILED

JUN 11 2010

OFFICE OF PETITIONS

In re Patent No. 6,971,939	:	
Issue Date: December 6, 2005	:	
Application No. 10/857,069	:	ON PETITION
Filed: May 28, 2004	:	
Attorney Docket No. 38157.00008.UTL	:	

This is a notice regarding your request for acceptance of a fee deficiency submission under 37 CFR 1.28. On September 1, 1998, the Court of Appeals for the Federal Circuit held that 37 CFR 1.28(c) is the sole provision governing the time for correction of the erroneous payment of the issue fee as a small entity. **See DH Technology v. Synergystex International, Inc. 154 F.3d 1333, 47 USPQ2d 1865 (Fed. Cir. Sept. 1, 1998).**

The Office no longer investigates or rejects original or reissue applications under 37 CFR 1.56. **1098 Off. Gaz. Pat. Office 502 (January 3, 1989)**. Therefore, nothing in this Notice is intended to imply that an investigation was done.

The address given on the petition differs from the address of record. A courtesy copy of this decision is being mailed to the address given on the petition; however, the Office will mail all future correspondence solely to the address of record.

Your fee deficiency submission under 37 CFR 1.28 is hereby **ACCEPTED**.

This patent is no longer entitled to small entity status. Accordingly, all future fees paid in this patent must be paid at the large entity rate.

Telephone inquiries concerning this decision should be directed to the undersigned at (571) 272-7751.

Joan Olszewski

Joan Olszewski
Petitions Examiner
Office of Petitions

cc: John E. Peterson
Perkins Coie LLP
P.O. Box 1208
Seattle, WA 98111-1208

UNITED STATES PATENT AND TRADEMARK OFFICE

UNITED STATES DEPARTMENT OF COMMERCE
United States Patent and Trademark Office
Address: COMMISSIONER FOR PATENTS
P.O. Box 1450
Alexandria, Virginia 22313-1450
www.uspto.gov

SAP AG
3410 HILLVIEW AVENUE
PALO ALTO, CA 94304

Mail Date: 08/03/2010

Applicant	: Svetlana Stancheva	: DECISION ON REQUEST FOR
Patent Number	: 7650627	: RECALCULATION of PATENT
Issue Date	: 01/19/2010	: TERM ADJUSTMENT IN VIEW
Application No	: 10/857,075	: OF WYETH AND NOTICE OF INTENT TO
Filed	: 05/28/2004	: ISSUE CERTIFICATE OF CORRECTION
		:

The Request for Recalculation is **GRANTED** to the extent indicated.

The patent term adjustment has been determined to be **799** days. The USPTO will *sua sponte* issue a certificate of correction reflecting the amount of PTA days determined by the recalculation.

Prior to the issuance of the certificate of correction, the USPTO will afford patentee an opportunity to be heard and request reconsideration. Accordingly, patentee has **one month or thirty (30) days**, whichever is longer, to file a request for reconsideration of this patent term adjustment calculation. See 35 U.S.C. 154(b)(3)(B)(ii) and 37 CFR 1.322(a)(4). No extensions of time will be granted under 37 CFR 1.136.

Patentee should use document code PET.OP if electronically filing a request for reconsideration of this patent term adjustment calculation. The patentee must also include the information required by 37 CFR 1.705(b)(2) and the fee required by 37 CFR 1.18(e). If patentee does not file a timely request for reconsideration of this patent term adjustment calculation including the information required by 37 CFR 1.705(b)(2) and the fee required by 37 CFR 1.18(e), the USPTO will issue a certificate of correction reflecting the PTA determination noted above.

Patentee should be aware that in order to preserve the right to review in the United States District Court for the District of Columbia of the USPTO patent term adjustment determination, patentee must ensure that he or she also take the steps required under 35 U.S.C. 154(b)(4)(A) in a timely manner. Nothing in the request for recalculation should be construed as providing an alternative time frame for commencing a civil action under 35 U.S.C. 154(b)(4)(A).

Any questions concerning this decision should be directed to the Office of Patent Legal Administration at 571-272-7702.

UNITED STATES PATENT AND TRADEMARK OFFICE

UNITED STATES DEPARTMENT OF COMMERCE
United States Patent and Trademark Office
Address: COMMISSIONER FOR PATENTS
P.O. Box 1450
Alexandria, Virginia 22313-1450
www.uspto.gov

Christopher M. Goff (27839)
ARMSTRONG TEASDALE LLP
ONE METROPOLITAN SQUARE
SUITE 2600
ST. LOUIS, MO 63102

Mail Date: 05/04/2010

Applicant	: Richard L. Underhill	: DECISION ON REQUEST FOR
Patent Number	: 7612249	: RECALCULATION of PATENT
Issue Date	: 11/03/2009	: TERM ADJUSTMENT IN VIEW
Application No	: 10/857,090	: OF WYETH AND NOTICE OF INTENT TO
Filed	: 05/28/2004	: ISSUE CERTIFICATE OF CORRECTION
		:

The Request for Recalculation is **GRANTED** to the extent indicated.

The patent term adjustment has been determined to be **845** days. The USPTO will *sua sponte* issue a certificate of correction reflecting the amount of PTA days determined by the recalculation.

Prior to the issuance of the certificate of correction, the USPTO will afford patentee an opportunity to be heard and request reconsideration. Accordingly, patentee has **one month or thirty (30) days**, whichever is longer, to file a request for reconsideration of this patent term adjustment calculation. See 35 U.S.C. 154(b)(3)(B)(ii) and 37 CFR 1.322(a)(4). No extensions of time will be granted under 37 CFR 1.136.

Patentee should use document code PET.OP if electronically filing a request for reconsideration of this patent term adjustment calculation. The patentee must also include the information required by 37 CFR 1.705(b)(2) and the fee required by 37 CFR 1.18(e). If patentee does not file a timely request for reconsideration of this patent term adjustment calculation including the information required by 37 CFR 1.705(b)(2) and the fee required by 37 CFR 1.18(e), the USPTO will issue a certificate of correction reflecting the PTA determination noted above.

Patentee should be aware that in order to preserve the right to review in the United States District Court for the District of Columbia of the USPTO patent term adjustment determination, patentee must ensure that he or she also take the steps required under 35 U.S.C. 154(b)(4)(A) in a timely manner. Nothing in the request for recalculation should be construed as providing an alternative time frame for commencing a civil action under 35 U.S.C. 154(b)(4)(A).

Any questions concerning this decision should be directed to the Office of Patent Legal Administration at 571-272-7702.

UNITED STATES PATENT AND TRADEMARK OFFICE

UNITED STATES DEPARTMENT OF COMMERCE
United States Patent and Trademark Office
Address: COMMISSIONER FOR PATENTS
P.O. Box 1450
Alexandria, Virginia 22313-1450
www.uspto.gov

REINHART BOERNER VAN DEUREN S.C.
ATTN: LINDA KASULKE, DOCKET COORDINATOR
1000 NORTH WATER STREET
SUITE 2100
MILWAUKEE, WI 53202

Mail Date: 04/20/2010

Applicant	: Karl L. Linck	: DECISION ON REQUEST FOR
Patent Number	: 7592029	: RECALCULATION of PATENT
Issue Date	: 09/22/2009	: TERM ADJUSTMENT IN VIEW
Appliction No	: 10/857,098	: OF WYETH AND NOTICE OF INTENT TO
Filed	: 05/28/2004	: ISSUE CERTIFICATE OF CORRECTION
		:

The Request for Recalculation is **GRANTED** to the extent indicated.

The patent term adjustment has been determined to be **1069** days. The USPTO will *sua sponte* issue a certificate of correction reflecting the amount of PTA days determined by the recalculation.

Prior to the issuance of the certificate of correction, the USPTO will afford patentee an opportunity to be heard and request reconsideration. Accordingly, patentee has **one month or thirty (30) days**, whichever is longer, to file a request for reconsideration of this patent term adjustment calculation. See 35 U.S.C. 154(b)(3)(B)(ii) and 37 CFR 1.322(a)(4). No extensions of time will be granted under 37 CFR 1.136.

Patentee should use document code PET.OP if electronically filing a request for reconsideration of this patent term adjustment calculation. The patentee must also include the information required by 37 CFR 1.705(b)(2) and the fee required by 37 CFR 1.18(e). If patentee does not file a timely request for reconsideration of this patent term adjustment calculation including the information required by 37 CFR 1.705(b)(2) and the fee required by 37 CFR 1.18(e), the USPTO will issue a certificate of correction reflecting the PTA determination noted above.

Patentee should be aware that in order to preserve the right to review in the United States District Court for the District of Columbia of the USPTO patent term adjustment determination, patentee must ensure that he or she also take the steps required under 35 U.S.C. 154(b)(4)(A) in a timely manner. Nothing in the request for recalculation should be construed as providing an alternative time frame for commencing a civil action under 35 U.S.C. 154(b)(4)(A).

Any questions concerning this decision should be directed to the Office of Patent Legal Administration at 571-272-7702.

PTO/SB/66 (03-09)
Approved for use through 03/31/2012. OMB 0651-0016
U.S. Patent and Trademark Office: U.S. DEPARTMENT OF COMMERCE
Under the Paperwork Reduction Act of 1995, no persons are required to respond to a collection of information unless it displays valid OMB control number.

PETITION TO ACCEPT UNINTENTIONALLY DELAYED PAYMENT OF MAINTENANCE FEE IN AN EXPIRED PATENT (37 CFR 1.378(c))

Patent Number	Issue Date (YYYY-MM-DD)	Application Number	Filing Date (YYYY-MM-DD)	Docket Number (if applicable)
6957143	2005-10-18	10857099	2004-05-27	A-1270CON/TANK-212C

CAUTION: Maintenance fee (and surcharge, if any) payment must correctly identify: (1) the patent number and (2) the application number of the actual U.S. application leading to issuance of that patent to ensure the fee(s) is/are associated with the correct patent. 37 CFR 1.366(c) and (d).

SMALL ENTITY
☐ Patentee claims, or has previously claimed, small entity status. See 37 CFR 1.27.

LOSS OF ENTITLEMENT TO SMALL ENTITY STATUS
☐ Patentee is no longer entitled to small entity status. See 37 CFR 1.27(g)

NOT Small Entity		Small Entity	
Fee	Code	Fee	Code
◉ 3 ½ year	(1551)	○ 3 ½ year	(2551)
○ 7 ½ year	(1552)	○ 7 ½ year	(2552)
○ 11 ½ year	(1553)	○ 11 ½ year	(2553)

SURCHARGE
The surcharge required by 37 CFR 1.20(i)(2) (Fee Code 1558) must be paid as a condition of accepting unintentionally delayed payment of the maintenance fee.

MAINTENANCE FEE (37 CFR 1.20(e)-(g))
The appropriate maintenance fee must be submitted with this petition.

STATEMENT
THE UNDERSIGNED CERTIFIES THAT THE DELAY IN PAYMENT OF THE MAINTENANCE FEE TO THIS PATENT WAS UNINTENTIONAL

PETITIONER(S) REQUEST THAT THE DELAYED PAYMENT OF THE MAINTENANCE FEE BE ACCEPTED AND THE PATENT REINSTATED

THIS PORTION MUST BE COMPLETED BY THE SIGNATORY OR SIGNATORIES

37 CFR 1.378(d) states: "Any petition under this section must be signed by an attorney or agent registered to practice before the Patent and Trademark Office, or by the patentee, the assignee, or other party in interest."

I certify, in accordance with 37 CFR 1.4(d)(4) that I am

◉ An attorney or agent registered to practice before the Patent and Trademark Office

○ A sole patentee

○ A joint patentee; I certify that I am authorized to sign this submission on behalf of all the other patentees.

○ A joint patentee; all of whom are signing this e-petition

○ The assignee of record of the entire interest

Patent Practitioner			
A signature of the applicant or representative is required in accordance with 37 CFR 1.33 and 10.18. Please see 37 CFR 1.4(d) for the form of the signature			
Signature	/Kendal M. Sheets/	Date (YYYY-MM-DD)	2010-04-20
Name	Kendal M. Sheets	Registration Number	47077

This collection of information is required by 37 CFR 1.378(c). The information is required to obtain or retain a benefit by the public which is to file (and by the USPTO to process) an application. Confidentiality is governed by 35 U.S.C. 122 and 37 CFR 1.11 and 1.14. This collection is estimated to take 1 hour to complete, including gathering, preparing, and submitting the completed application form to the USPTO. Time will vary depending upon the individual case. Any comments on the amount of time you require to complete this form and/ or suggestions for reducing this burden, should be sent to the Chief Information Officer, U.S. Patent and Trademark Office, U.S. Department of Commerce, P.O. Box 1450, Alexandria, VA 22313-1450. DO NOT SEND FEES OR COMPLETED FORMS TO THIS ADDRESS. **This form can only be used when in conjunction with EFS-Web. If this form is mailed to the USPTO, it may cause delays in reinstating the patent.**

Privacy Act Statement

The Privacy Act of 1974 (P.L. 93-579) requires that you be given certain information in connection with your submission of the attached form related to a patent application or patent. Accordingly, pursuant to the requirements of the Act, please be advised that: (1) the general authority for the collection of this information is 35 U.S.C. 2(b)(2); (2) furnishing of the information solicited is voluntary; and (3) the principal purpose for which the information is used by the U.S. Patent and Trademark Office is to process and/or examine your submission related to a patent application or patent. If you do not furnish the requested information, the U.S. Patent and Trademark Office may not be able to process and/or examine your submission, which may result in termination of proceedings or abandonment of the application or expiration of the patent.

The information provided by you in this form will be subject to the following routine uses:

1. The information on this form will be treated confidentially to the extent allowed under the Freedom of Information Act (5 U.S.C. 552) and the Privacy Act (5 U.S.C. 552a). Records from this system of records may be disclosed to the Department of Justice to determine whether the Freedom of Information Act requires disclosure of these records.

2. A record from this system of records may be disclosed, as a routine use, in the course of presenting evidence to a court, magistrate, or administrative tribunal, including disclosures to opposing counsel in the course of settlement negotiations.

3. A record in this system of records may be disclosed, as a routine use, to a Member of Congress submitting a request involving an individual, to whom the record pertains, when the individual has requested assistance from the Member with respect to the subject matter of the record.

4. A record in this system of records may be disclosed, as a routine use, to a contractor of the Agency having need for the information in order to perform a contract. Recipients of information shall be required to comply with the requirements of the Privacy Act of 1974, as amended, pursuant to 5 U.S.C. 552a(m).

5. A record related to an International Application filed under the Patent Cooperation Treaty in this system of records may be disclosed, as a routine use, to the International Bureau of the World Intellectual Property Organization, pursuant to the Patent Cooperation Treaty.

6. A record in this system of records may be disclosed, as a routine use, to another federal agency for purposes of National Security review (35 U.S.C. 181) and for review pursuant to the Atomic Energy Act (42 U.S.C. 218(c)).

7. A record from this system of records may be disclosed, as a routine use, to the Administrator, General Services, or his/her designee, during an inspection of records conducted by GSA as part of that agency's responsibility to recommend improvements in records management practices and programs, under authority of 44 U.S.C. 2904 and 2906. Such disclosure shall be made in accordance with the GSA regulations governing inspection of records for this purpose, and any other relevant (i.e., GSA or Commerce) directive. Such disclosure shall not be used to make determinations about individuals.

8. A record from this system of records may be disclosed, as a routine use, to the public after either publication of the application pursuant to 35 U.S.C. 122(b) or issuance of a patent pursuant to 35 U.S.C. 151. Further, a record may be disclosed, subject to the limitations of 37 CFR 1.14, as a routine use, to the public if the record was filed in an application which became abandoned or in which the proceedings were terminated and which application is referenced by either a published application, an application open to public inspections or an issued patent.

9. A record from this system of records may be disclosed, as a routine use, to a Federal, State, or local law enforcement agency, if the USPTO becomes aware of a violation or potential violation of law or regulation.

UNITED STATES PATENT AND TRADEMARK OFFICE

Commissioner for Patents
United States Patent and Trademark Office
P.O. Box 1450
Alexandria, VA 22313-1450
www.uspto.gov

In re Patent No. 6957143
Issue Date: October 18,2005
Application No. 10857099
Filed: May 27,2004
Attorney Docket No. A-1270CON/TANK-212CON

:
:DECISION GRANTING PETITION
:UNDER 37 CFR 1.378(c)
:

This is a decision on the electronic petition, filed April 20,2010 ,under 37 CFR 1.378(c) to accept the unintentionally delayed payment of the 3.5 year maintenance fee for the above-identified patent.

The petition is **GRANTED**.

The maintenance fee is accepted, and the above-identified patent reinstated as of April 20,2010 . This decision also constitutes notice that the fee has been accepted. An electronic copy of the petition and this decision has been created as an entry in the Image File Wrapper. Nevertheless, petitioner should print and retain an independent copy.

Telephone inquiries related to this electronic decision should be directed to the Electronic Business Center at 1-866-217-9197.

UNITED STATES PATENT AND TRADEMARK OFFICE

Commissioner for Patents
United States Patent and Trademark Office
P.O. Box 1450
Alexandria, VA 22313-1450
www.uspto.gov

SALIWANCHIK LLOYD & SALIWANCHIK
A PROFESSIONAL ASSOCIATION
PO BOX 142950
GAINESVILLE FL 32614-2950

COPY MAILED

DEC 3 1 2007

OFFICE OF PETITIONS

In re Application of	:	
Marossero et al.	:	
Application No. 10/857,107	:	DECISION ON PETITION
Filed: May 28, 2004	:	
Attorney Docket No. UF-409	:	

This is a decision on the petition under the unintentional provisions of 37 CFR 1.137(b), filed December 18, 2007, to revive the above-identified application.

The petition is **GRANTED**.

This application became abandoned for failure to timely pay the issue and publication fees on or before December 14, 2007, as required by the Notice of Allowance and Fee(s) Due, mailed September 14, 2007. Accordingly, the date of abandonment of this application is December 15, 2007 .

The petition satisfies the requirements of 37 CFR 1.137(b) in that petitioner has supplied (1) the reply in the form of payment of the issue fee of $720.00 and the publication fee of $300.00, (2) the petition fee of 770.00; and (3) a proper statement of unintentional delay.

Telephone inquiries concerning this decision should be directed to the undersigned at (571) 272-3215.

This application is being referred to Publishing Division for processing into a patent.

Charlema Grant

Charlema Grant
Petitions Attorney
Office of Petitions

UNITED STATES PATENT AND TRADEMARK OFFICE

Commissioner for Patents
United States Patent and Trademark Office
P.O. Box 1450
Alexandria, VA 22313-1450
www.uspto.gov

Paper No.

SALIWANCHIK LLOYD & SALIWANCHIK
A PROFESSIONAL ASSOCIATION
PO BOX 142950
GAINESVILLE FL 32614-2950

COPY MAILED

OCT 28 2008

OFFICE OF PETITIONS

In re Patent No. 7,333,850	:
Marossero et al.	: DECISION ON COMMUNICATION
Issue Date: February 19, 2008	: REGARDING
Application No. 10/857,107	: PATENT TERM ADJUSTMENT
Filed: May 28, 2004	: and
Attorney Docket No.	: NOTICE OF INTENT TO ISSUE
UF-409	: CERTIFICATE OF CORRECTION

This is a decision on the "COMMUNICATION REGARDING PATENT TERM ADJUSTMENT," filed on February 27, 2008. The letter is being construed as a letter filed pursuant to patentees' duty of good faith and candor, requesting that the Patent Term Adjustment for the above-identified patent be reduced from 305 days to 292 days.

The request for reconsideration of the patent term adjustment indicated in the patent is **GRANTED**.

The patent term adjustment indicated in the patent is to be corrected by issuance of a certificate of correction showing a revised Patent Term Adjustment of two hundred ninety-two (292) days.

On September 14, 2007, the Determination of Patent Term Adjustment under 35 U.S.C. § 154(b) was mailed, stating that the Patent Term Adjustment was 309 days.

On December 18, 2008, the issue and publication fees were filed, along with a petition to revive the application.

On February 19, 2008, the above-identified application matured into U.S. Patent No. 7,333,850.

The Patent issued with a revised Patent Term Adjustment of three hundred five (305) days given an entry of a period of reduction for applicant delay in payment of the issue fee of four (4) days.

Specifically, 37 CFR 1.704(b) states, in pertinent part, that:

> An applicant shall be deemed to have failed to engage in reasonable efforts to conclude processing or examination of an application for the cumulative total of any periods of time in excess of three months that are taken to reply to any notice or action by the Office making any rejection, objection, argument, or other request, measuring such three-month period from the date the notice or action was mailed or given to the applicant, in which case the period of adjustment set forth in § 1.703 shall be reduced by the number of days, if any, beginning on the day after the date that is three months after the date of mailing or transmission of the Office communication notifying the applicant of the rejection, objection, argument, or other request and ending on the date the reply was filed.

The Notice of Allowance was mailed on September 14, 2007. The issue fee was paid on December 18, 2007. Thus, the period of reduction is four (4) days for the period beginning on December 15, 2007, and ending on December 18, 2007.

Patentee states that the patent term adjustment should be further reduced because the application became abandoned for failure to pay the issue fee not later than December 14, 2007. A petition to revive was filed on December 18, 2007, and a decision granting the petition was mailed on December 31, 2007.

A review of the record reveals that the application became abandoned on December 15, 2007, and that a petition to revive the application for late payment of the issue fee was granted on December 31, 2007. Accordingly, 37 CFR 1.704(c)(3) states that the period of adjustment set forth in § 1.703 shall be reduced by the number of days, if any, beginning on the date of abandonment or the date after the date the issue fee was due and ending on the earlier of (i) the date of mailing of the decision

reviving the application or accepting late payment of the issue fee.

Pursuant to 37 CFR 1.704(c)(3), a period of reduction of 17 days should have been entered for the period beginning on December 15, 2007, and ending on December 31, 2007. However, considering that this period of reduction overlaps with the period of reduction of four (4) days pursuant to 37 CFR 1.704(b) for the period beginning on December 15, 2007, and ending on December 18, 2007, an additional period of reduction of 13 days, rather than 17 days, is warranted.

In view thereof, the correct determination of PTA at the time of the issuance of the patent is two hundred ninety-two (292) days (372 days of PTO delay, reduced by 80 (30+33+4+13) days of Applicant delay).

As the instant letter was submitted to advise the Office of an error in Applicant's favor, the $200.00 application fee under 37 CFR 1.705(b) was not required, and has not been charged.

The application file is being forwarded to the Certificate of Correction Branch for issuance of a certificate of correction in order to rectify this error. The Office will issue a Certificate of Correction indicating that the term of the above-identified patent is extended or adjusted by TWO HUNDRED NINETY--TWO (292) days.

Telephone inquiries specific to this matter should be directed to Douglas I. Wood, Senior Petitions Attorney, at (571) 272-3231.

Nancy Johnson
Senior Petitions Attorney
Office of Petitions

Encl: Copy of DRAFT Certificate of Correction

UNITED STATES PATENT AND TRADEMARK OFFICE

CERTIFICATE OF CORRECTION

PATENT : 7,333,850 B2

DATED : February 19, 2008

INVENTOR(S) : Dorothee Marossero

DRAFT

It is certified that error appears in the above-identified patent and that said Letters Patent is hereby corrected as shown below:

On the cover page,

[*] Notice: Subject to any disclaimer, the term of this patent is extended or adjusted under 35 USC 154(b) by (305) days

Delete the phrase "by 305 days" and insert – by 292 days--

UNITED STATES PATENT AND TRADEMARK OFFICE

Commissioner for Patents
United States Patent and Trademark Office
P.O. Box 1450
Alexandria, VA 22313-1450
www.uspto.gov

MAIL

AUG 1 2 2005

DIRECTOR OFFICE
TECHNOLOGY CENTER 2100

Chun-pok Leung
TOWNSEND AND TOWNSEND AND CREW LLP
TWO EMBARCADERO CENTER
8TH FLOOR
SAN FRANCISCO, CA 94111-3834

In re Application of: Nakagawa, et al.
Application No. 10/857,112
Filed: 28 May 2004
For: STORAGE SYSTEM

DECISION ON PETITION
TO MAKE SPECIAL
(ACCELERATED EXAMINATION)
UNDER M.P.E.P. §708.02 (VIII)

This is a decision on the petition filed 14 June 2005, under 37 C.F.R. 102(d) and M.P.E.P. § 708.02(VIII): Accelerated Examination, to make the above-identified application special.

The Petition is **GRANTED**.

M.P.E.P. § 708.02, Section VIII which sets out the prerequisites for a grantable petition for Accelerated Examination under 37 C.F.R. § 102(d) states in relevant part:

A new application (one which has not received any examination by the examiner) may be granted special status provided that applicant (and this term includes applicant's attorney or agent) complies with each of the following items:

(a) Submits a petition to make special accompanied by the fee set forth in 37 CFR 1.17(h);

(b) Presents all claims directed to a single invention, or if the Office determines that all the claims presented are not obviously directed to a single invention, will make an election without traverse as a prerequisite to the grant of special status;

(c) Submits a statement(s) that a pre-examination search was made, listing the field of search by class and subclass, publication, Chemical Abstracts, foreign patents, etc. The pre-examination search must be directed to the invention as claimed in the application for which special status is requested. A search made by a foreign patent office satisfies this requirement;

(d) Submits one copy each of the references deemed most closely related to the subject matter encompassed by the claims if said references are not already of record; and

(e) Submits a detailed discussion of the references, which discussion points out, with the particularity required by 37 CFR 1.111 (b) and (c), how the claimed subject matter is patentable over the references.

Petition to Make Special **GRANTED** since all of the requirements for special status under MPEP § 708.02(VIII) have been met.

The application file is being forwarded to the Examiner for accelerated examination in accordance with the procedures set forth in M.P.E.P. §708.02, Section VIII. If the application is subsequently allowed, it will be given priority for printing. See M.P.E.P. §1309.

Brian L. Johnson
Special Program Examiner
Technology Center 2100
Computer Architecture, Software and Information Security
571-272-3595

GO

UNITED STATES PATENT AND TRADEMARK OFFICE

Commissioner for Patents
United States Patent and Trademark Office
P.O. Box 1450
Alexandria, VA 22313-1450
www.uspto.gov

Reflectivity, Inc.
350 Potrero Avenue
Sunnyvale, CA 94085

COPY MAILED

SEP 2 1 2004

OFFICE OF PETITIONS

In re Application of	:	
Andrew G. Huibers	:	
Application No. 10/857,132	:	DECISION GRANTING PETITION
Filed: May 28, 2004	:	
Attorney Docket No. P160-US	:	

This is a decision on the petition filed August 30, 2004, requesting that Office withdraw the Notice of Omitted Item(s) in a Nonprovisional Application mailed on July 29, 2004.

On May 28, 2004, applicant filed the above-identified application. On July 29, 2004, the Office mailed a Notice of Omitted Item(s) in a Nonprovisional Application, stating that the application had been accorded a filing date of May 28, 2004, and advising applicant that Figures 4I and 4J appeared to have been omitted.

In response, on August 30, 2004, applicant filed the present petition and a copy of applicant's postcard receipt acknowledging receipt of "Drawings - 52 pages." Additionally, applicants submitted Figures 4I and 4J with the present petition.

Upon review of the record, Figures 4I and 4J deposited on May 28, 2004, have not been located among the application papers. However, the evidence is convincing that the application papers deposited on May 28, 2004, included Figures 4I and 4J, which were subsequently misplaced in the United States Patent and Trademark Office. Therefore, the application, including Figures 4I and 4J, was complete on filing and will be granted a filing date of May 28, 2004.

Accordingly, the petition is granted.

fee is unnecessary and will be refunded to Deposit Account No. 50-1516.

The Office of Initial Patent Examination is directed to **accord the above-identified application a filing date of May 28, 2004,** using the application papers submitted on that date and Figures 4I and 4J submitted on August 30, 2004.

Any inquiries related to this decision should be directed to the undersigned at (703) 306-5589.

Christina Tartera Donnell

Christina Tartera Donnell
Senior Petitions Attorney
Office of Petitions

UNITED STATES PATENT AND TRADEMARK OFFICE

Commissioner for Patents
United States Patent and Trademark Office
P.O. Box 1450
Alexandria, VA 22313-1450
www.uspto.gov

MORGAN, LEWIS & BOCKIUS, LLP
ONE MARKET SPEAR
STREET TOWER
SAN FRANCISCO CA 94105

MAILED

JUL 13 2009

OFFICE OF PETITIONS

In re Application of	:	
Frank B. Smith	:	
Application No. 10/857,139	:	DECISION ON PETITION
Filed: May 27, 2004	:	
Attorney Docket No. 067572-5001-US	:	

This is a decision on the petition under the unintentional provisions of 37 CFR 1.137(b), filed May 1, 2009, to revive the above-identified application.

The petition is **GRANTED**.

The petition satisfies the conditions for revival pursuant to the provisions of 37 CFR 1.137(b) in that (1) the reply in the form of an Appeal Brief; (2) the petition fee; and (3) the required statement of unintentional delay have been received. Accordingly, the reply, is accepted as having been unintentionally delayed.

Telephone inquiries concerning this decision should be directed to the undersigned at (571) 272-3208.

This application is being referred to Technology Center AU 1725 for appropriate action by the Examiner in the normal course of business on the reply received Appeal Brief received October 25, 2007.

/KOC/
Karen Creasy
Petitions Examiner
Office of Petitions

SPE RESPONSE FOR CERTIFICATE OF CORRECTION

DATE : 1/10/07

Paper No.: —

TO SPE OF : ART UNIT 2881

SUBJECT : Request for Certificate of Correction for Appl. No.: 10/857140 Patent No.: 7122815B2

Please respond to this request for a certificate of correction within 7 days.

Please review the requested changes/corrections as shown in the **COCIN** document(s) in the IFW application image. No new matter should be introduced, nor should the scope or meaning of the claims be changed.

Please complete the response (see below) and forward the completed response to scanning using document code **COCX**.

Virginia Tolbert

Certificates of Correction Branch

703-308-9390 ext. 113

Thank You For Your Assistance

The request for issuing the above-identified correction(s) is hereby:

Note your decision on the appropriate box.

- ☒ **Approved** — **All** changes apply.
- ☐ **Approved in Part** — Specify below which changes **do not** apply.
- ☐ **Denied** — State the reasons for denial below.

Comments: _____

SPE

2881

Art Unit

STAINBROOK & STAINBROOK, LLP

North Bay Intellectual Property Law Group
Patents, Trademarks, Copyrights
and Related Matters

Sonoma County Office:
3558 Round Barn Blvd.
Suite 203
Santa Rosa, CA 95403
Tel: (707) 578-9333
Fax: (707) 578-3133

Marin County Office:
165 N. Redwood Dr.
Suite 110
San Rafael, CA 94903
Tel: (415) 492-9333
Fax: (415) 499-3130

RECEIVED
CENTRAL FAX CENTER
DEC 07 2006

Certificate
DEC 12 2006
of Correction

FAX COVER SHEET

To: *Commissioner for Patents*
UNITED STATES PATENT AND TRADEMARK OFFICE
Attn: Examiner Anthony G. Quash
Art Unit: 2881

Fax #: (571) 273-8300

From: Craig M. Stainbrook

Subject: Paper: Request for Examiner Authorization to Re-Print Face Page of Issued Patent to Correct Drawing Representing Invention (Submitted in Connection with a Certificate of Correction of Issued Patent)
Patentee/Applicant: Donald S. Wood
Patent No. 7,122,815
Serial No. 10/857,140
Art Unit: 2881
Patent Issue Date: 10/17/2006
Filing Date: 05/27/04
Title: INFRARED RADIATION EMITTER
Confirmation No: 2063
Customer No: 61894
Attorney Docket No: 00779.P1US

Date: December 7, 2006

Pages: 3, including cover page

Original(s) Will not follow via US Mail

CERTIFICATE OF TRANSMISSION UNDER 37 CFR 1.8

I hereby certify that the attached this correspondence is being facsimile transmitted to the Patent and Trademark Office via Facsimile at Fax No: **(571) 273-8300.**

Date: December 7, 2006

Barbara MacDougall

Barbara MacDougall

PLEASE NOTE: The information contained in this transmission is privileged and confidential. It is intended only for the use of the individual or entity named above. If the reader of this message is not the intended recipient or the employee or agent responsible for delivering the message to the intended recipient, you are hereby notified that any dissemination, distribution, or copying of this communication is strictly prohibited.

If you have received this communication in error, please notify us immediately by telephone and return the original message to us

DEC 12 2006

RECEIVED
CENTRAL FAX CENTER

DEC 07 2006

Certificate of Transmission under 37 CFR 1.8
I hereby certify that this correspondence is being facsimile transmitted to the Patent and Trademark Office to:
Facsimile No: (571) 273-8300
on 12/07/2006.
Date
Barbara MacDougall

IN THE UNITED STATES PATENT AND TRADEMARK OFFICE

Applicant/Patentee:	Donald S. Wood	
Patent No.	7,122,815 B2	Examiner: Quash, Anthony G.
Appln. Serial No.:	10/857,140	TC/A.U. 2881
Filed:	05/27/2004	Confirmation No: 2063
Issue Date:	10/17/2006	Customer No: *61894*
Title:	INFRARED RADIATION EMITTER	Docket No: 00779.P1US

Commissioner for Patents
P.O. Box 1450
Alexandria, VA 22313-1450

REQUEST FOR EXAMINER AUTHORIZATION TO RE-PRINT FACE PAGE OF ISSUED PATENT TO CORRECT DRAWING REPRESENTING INVENTION (SUBMITTED IN CONNECTION WITH A CERTIFICATE OF CORRECTION OF ISSUED PATENT)

Dear Examiner Quash:

Patentee hereby requests that Examiner authorize the Office of Patent Publication to reprint the face page of recently issued Patent No. 7,122,815 to show Fig. 6, a copy of which drawing sheet is attached, which more accurately illustrates the patented invention.

Respectfully Submitted,

Date: December 7, 2006

Craig M. Stainbrook
Registration No. 45,126
STAINBROOK & STAINBROOK, LLP
3558 Round Barn Blvd., Suite 203
Santa Rosa, CA 95403
Telephone (707) 578-9333
Attorneys for Applicant

DEC 12 2006

RECEIVED
CENTRAL FAX CENTER
DEC 0 7 2006

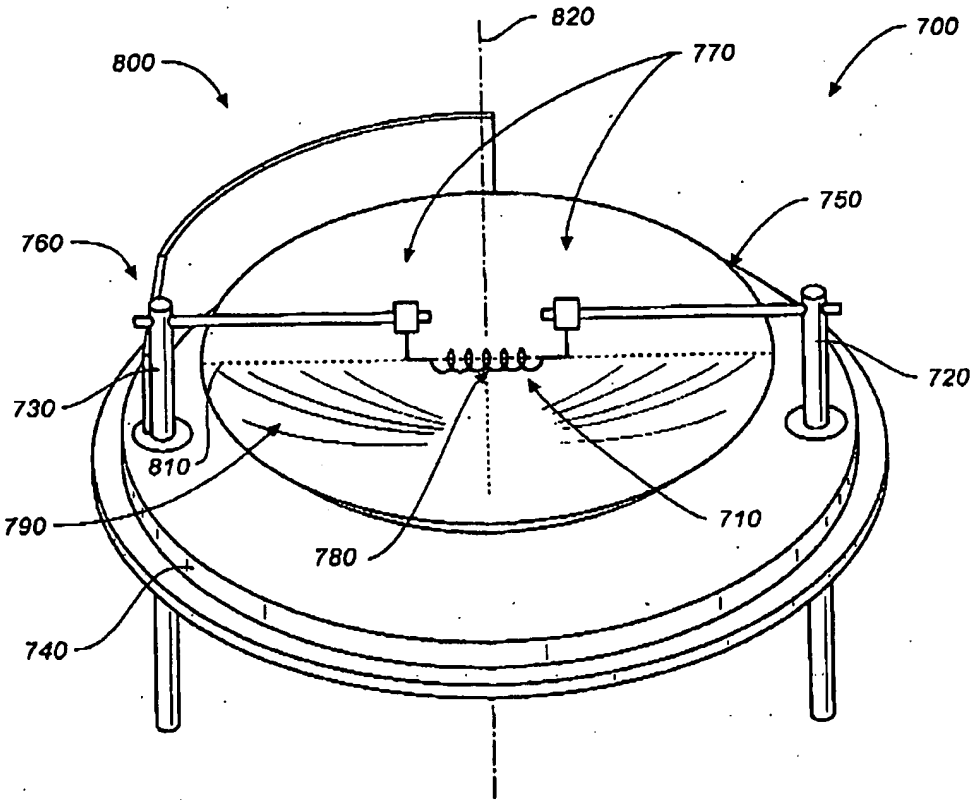

FIG._6

UNITED STATES PATENT AND TRADEMARK OFFICE

COMMISSIONER FOR PATENTS
UNITED STATES PATENT AND TRADEMARK OFFICE
P.O. BOX 1450
ALEXANDRIA, VA 22313-1450
www.uspto.go

MAIL

SEP 2 8 2004

DIRECTOR OFFICE
TECHNOLOGY CENTER 2600

Robert Brown Jr
1613 Sweetwater Dr
Warner Robins GA 31088

In re application of
Robert BROWN
Application No. SN 10/857,145
Filed: June 1, 2004
For: **PERSONAL SPACE THIN PANEL MEDIA ENTERTAINMENT CENTER SYSTEM**

DECISION ON PETITION
TO MAKE SPECIAL

This is a decision on the petition filed September 8, 2004 under 37 C.F.R. §102(c) for reasons of Health, Environmental Quality or Important to a Branch of Public Service to make the above-identified application special.

A grantable petition to make special under 37 C.F.R. § 1.102(c), and M.P.E.P. § 708.02, Section III, (Health) must be accompanied by a showing, as by doctor's certificate, that the state of health of the applicant is such that he/she might not be available to assist in the prosecution of the application if it were to run its normal course. No fee is required for such a petition. The petition does not include a showing of applicant's current state of health as required under M.P.E.P. § 708.02, Section III.

A grantable petition under MPEP 708.02 Section V, Environmental Quality should be accompanied by statements explaining how the invention contribute to the restoration of maintenance of life sustaining elements, i.e. air, water and soil. No fee would be required for this type of petition. The petition does not include such statements. There is no provision for petitions to make special for inventions that are alleged to be important to a branch of public service.

Accordingly, the petition is **DENIED**.

Any request for reconsideration must be submitted within TWO (2) Months from the mailing date of this decision and be in compliance with the procedures set forth in MPEP 708.02.

Kenneth A. Wieder
Special Program Examiner
Technology Center 2600
Communications

UNITED STATES PATENT AND TRADEMARK OFFICE

COMMISSIONER FOR PATENTS
UNITED STATES PATENT AND TRADEMARK OFFICE
P.O. BOX 1450
ALEXANDRIA, VA 22313-1450
www.uspto.gov

MAIL

NOV 18 2004

DIRECTOR OFFICE
TECHNOLOGY CENTER 2600

Robert Brown Jr
1613 Sweetwater Dr
Warner Robins GA 31088

In re Application of :
Robert BROWN :
Application No. 10/857,145 :
Filed: October 26, 2004 :
For: **PERSONAL SPACE THIN PANEL MEDIA ENTERTAINMENT CENTER SYSTEM** :

DECISION ON PETITION TO MAKE SPECIAL

This is a decision on the petition filed October 26, 2004 under Manual of Patent Examination Procedure §708.02, VIII requesting accelerated examination.

The petition under Manual of Patent Examination Procedure §708.02, VIII, must:
(1) be filed prior to receiving any examination by the examiner,
(2) be accompanied by the required fee- $130,
(3) the claims should be directed to a single invention (if it is determined that the claims pertain to more than one invention, then applicant will have to make an election without traverse or forfeit accelerated examination status),
(4) state that a pre-examination search was made, and fully discuss the search method employed, such as classes and subclasses searched, publications, Chemical abstracts, patents, etc. A search made by a foreign patent office satisfies this requirement,
(5) be accompanied by a copy of each of the references most closely related to the subject matter encompassed by the claims if said references are not already of record,
(6) fully discuss the references, pointing out with the particularity required by 37 C.F.R. §1.111 (b) and (c), how the claimed subject matter is patentable over the references.

The petitioner meets all the above-listed requirements. Accordingly, the petition is **GRANTED**.

The application will retain its special status throughout its entire prosecution, including any appeal to the Board of Patent Appeals and Interferences, subject only to diligent prosecution by the applicant. The application file is being forwarded to the examiner for appropriate action in due course.

Kenneth A. Wieder
Special Program Examiner
Technology Center 2600
Communications

UNITED STATES PATENT AND TRADEMARK OFFICE

Commissioner for Patents
United States Patent and Trademark Office
P.O. Box 1450
Alexandria, VA 22313-1450
www.uspto.gov

COPY MAILED

MAY 14 2007

OFFICE OF PETITIONS

S.C. JOHNSON & SON, INC.
1525 HOWE STREET
RACINE WI 53403-2236

In re Application of
James Kimball
Application No. 10/857,154
Filed: September 27, 2004
Attorney Docket No. J-3855

DECISION GRANTING PETITION

This is a decision on the " Request For Correction of Filing Receipt" filed June 30, 2005, requesting that the above-identified application be accorded the earlier filing date of May 28, 2004.

Application papers in the above-identified application were deposited on May 28, 2004. However, on July 27, 2004, the Office of Initial Patent Examination mailed a "Notice of Missing Parts", application had been accorded a filing date of May 28, 2004 and advising applicant that "figures 3A" described in the specification appeared to have been omitted.

In response, 1 replacement sheet of drawing (figures 2, 2A, 3, 3A) were filed on September 27, 2004. To complete the reply to the "Notice", a declaration was provided on September 27, 2004. The application was accorded a new filing date of September 27, 2004.

Petitioner contends no drawings were omitted upon filing on May 28, 2004. Petitioner acknowledges the drawings submitted on May 28, 2004 included a mislabeled figure "2B". Petitioner contends that figure 2B should have been labeled as 3A. Petitioner further argues that the correct filing date for the application should be the date of receipt of the drawings on May 28, 2004.

A review of the record shows applicant is not seeking to submit any additional drawings. However, the office was correct in stating that figure 3A "appeared" to have been omitted.

Pursuant to 35 USC 111(a)(4), the filing date of an application shall be the date on which the specification and any required drawing are received in the Office. A review of the record shows the submission of drawings on May 28, 2004 completed the requirements for according a filing date.

The petition is **Granted**. No petition fee is required and none has been charged.

The application will be returned to the Office of Initial Patent Examination for further processing with a **filing date of May 28, 2004**, using the sheets of drawings supplied on May 28, 2004. Thereafter, the application should be returned to Art Unit 1744 for further processing.

Telephone inquiries specific to this matter should be directed to the undersigned at (571) 272 -3215.

Charlema R. Grant

Charlema R. Grant
Petitions Attorney
Office of Petitions

UNITED STATES PATENT AND TRADEMARK OFFICE

Commissioner for Patents
United States Patent and Trademark Office
P.O. Box 1450
Alexandria, VA 22313-1450
www.uspto.gov

MORRISON & FOERSTER LLP
755 PAGE MILL RD
PALO ALTO CA 94304-1018

COPY MAILED

NOV 23 2007

OFFICE OF PETITIONS

In re Application of	:	
Nurith Kurn	:	
Application No. 10/857,160	:	DECISION ON PETITION
Filed: May 28, 2004	:	TO WITHDRAW
Attorney Docket No. 49269200310	:	FROM RECORD
	:	

This is a decision on the Request to Withdraw as attorney or agent of record under 37 C.F.R. § 1.36(b) filed August 3, 2007.

The request is **DISMISSED** as moot.

A review of the file record indicates that the power of attorney to Morrison & Foerster, LLP has been revoked by the assignee of the patent application on July 31, 2007. Accordingly, the request to withdraw under 37 C.F.R. § 1.36(b) is moot.

All future communications from the Office will continue to be directed to the below-listed address until otherwise notified by applicant.

Telephone inquires concerning this decision should be directed to undersigned at 571-272-1642.

April M. Wise
Petitions Examiner
Office of Petitions

cc: ROBERT H. REAMEY, PHD
WILSON, SONSINI GOODRICH & ROSATI
650 PAGE MILL ROAD
PALO ALTO, CA 94304

UNITED STATES PATENT AND TRADEMARK OFFICE

Commissioner for Patents
United States Patent and Trademark Office
P.O. Box 1450
Alexandria, VA 22313-1450
www.uspto.gov

MORRISON & FOERSTER LLP
755 PAGE MILL RD
PALO ALTO CA 94304-1018

COPY MAILED

NOV 23 2007

OFFICE OF PETITIONS

In re Application of	:	
Nurith Kurn	:	
Application No. 10/857,160	:	DECISION ON PETITION
Filed: May 28, 2004	:	TO WITHDRAW
Attorney Docket No. 49269200310	:	FROM RECORD

This is a decision on the Request to Withdraw as attorney or agent of record under 37 C.F.R. § 1.36(b) filed July 11, 2007.

The request is **DISMISSED** as moot.

A review of the file record indicates that the power of attorney to Morrison & Foerster, LLP has been revoked by the assignee of the patent application on July 31, 2007. Accordingly, the request to withdraw under 37 C.F.R. § 1.36(b) is moot.

All future communications from the Office will continue to be directed to the below-listed address until otherwise notified by applicant.

Telephone inquires concerning this decision should be directed to undersigned at 571-272-1642.

April M. Wise
Petitions Examiner
Office of Petitions

cc: ROBERT H. REAMEY, PHD
WILSON, SONSINI GOODRICH & ROSATI
650 PAGE MILL ROAD
PALO ALTO, CA 94304

UNITED STATES PATENT AND TRADEMARK OFFICE

Commissioner for Patents
United States Patent and Trademark Office
P.O. Box 1450
Alexandria, VA 22313-1450
www.uspto.gov

KOSAN BIOSCIENCES, INC.
3832 BAY CENTER PLACE
HAYWARD CA 94588

COPY MAILED

FEB 28 2007

OFFICE OF PETITIONS

In re Application of	:	
Robert Johnson Jr., et al	:	
Application No. 10/857,166	:	DECISION GRANTING PETITION
Filed: May 27, 2004	:	UNDER 37 CFR 1.137(b)
Attorney Docket No. 010119.01	:	

This is a decision on the petition under 37 CFR 1.137(b), filed October 19, 2006, to revive the above-identified application.

The petition is **GRANTED**.

The petition satisfies the conditions for revival pursuant to the provisions of 37 CFR 1.137(b) in that (1) the reply in the form of an amendment; (2) the petition fee; and (3) the required statement of unintentional delay have been received. Accordingly, the reply to the Nonfinal Rejection of January 25, 2006, is accepted as having been unintentionally delayed.

Telephone inquiries concerning this decision should be directed to the undersigned at (571) 272-3208.

This matter is being referred to Technology Center AU 1614.

Karen Creasy

Karen Creasy
Petitions Examiner
Office of Petitions

UNITED STATES PATENT AND TRADEMARK OFFICE

UNITED STATES DEPARTMENT OF COMMERCE
United States Patent and Trademark Office
Address: COMMISSIONER FOR PATENTS
P.O. Box 1450
Alexandria, Virginia 22313-1450
www.uspto.gov

TARGET BRANDS, INC.
1000 NICOLLET MALL, TPS-3165
MINNEAPOLIS, MN 55403

Mail Date: 04/26/2010

Applicant	: James A. Dewey JR.	: DECISION ON REQUEST FOR
Patent Number	: 7603299	: RECALCULATION of PATENT
Issue Date	: 10/13/2009	: TERM ADJUSTMENT IN VIEW
Application No	: 10/857,178	: OF WYETH AND NOTICE OF INTENT TO
Filed	: 05/28/2004	: ISSUE CERTIFICATE OF CORRECTION
		:

The Request for Recalculation is **GRANTED** to the extent indicated.

The patent term adjustment has been determined to be **1518** days. The USPTO will *sua sponte* issue a certificate of correction reflecting the amount of PTA days determined by the recalculation.

Prior to the issuance of the certificate of correction, the USPTO will afford patentee an opportunity to be heard and request reconsideration. Accordingly, patentee has **one month or thirty (30) days**, whichever is longer, to file a request for reconsideration of this patent term adjustment calculation. See 35 U.S.C. 154(b)(3)(B)(ii) and 37 CFR 1.322(a)(4). No extensions of time will be granted under 37 CFR 1.136.

Patentee should use document code PET.OP if electronically filing a request for reconsideration of this patent term adjustment calculation. The patentee must also include the information required by 37 CFR 1.705(b)(2) and the fee required by 37 CFR 1.18(e). If patentee does not file a timely request for reconsideration of this patent term adjustment calculation including the information required by 37 CFR 1.705(b)(2) and the fee required by 37 CFR 1.18(e), the USPTO will issue a certificate of correction reflecting the PTA determination noted above.

Patentee should be aware that in order to preserve the right to review in the United States District Court for the District of Columbia of the USPTO patent term adjustment determination, patentee must ensure that he or she also take the steps required under 35 U.S.C. 154(b)(4)(A) in a timely manner. Nothing in the request for recalculation should be construed as providing an alternative time frame for commencing a civil action under 35 U.S.C. 154(b)(4)(A).

Any questions concerning this decision should be directed to the Office of Patent Legal Administration at 571-272-7702.

UNITED STATES PATENT AND TRADEMARK OFFICE

Commissioner for Patents
United States Patent and Trademark Office
P.O. Box 1450
Alexandria, VA 22313-1450
www.uspto.gov

QUINE INTELLECTUAL PROPERTY LAW GROUP, P.C.
P O BOX 458
ALAMEDA, CA 94501

COPY MAILED

JUN 23 2008

OFFICE OF PETITIONS

In re Application of	:	
Edward W. Woodhall, et al.	:	
Application No. 10/857,180	:	DECISION ON PETITION
Filed: May 28, 2004	:	TO WITHDRAW
Attorney Docket No. 301-004510US	:	FROM RECORD
	:	

This is a decision on the Request to Withdraw as attorney or agent of record under 37 C.F.R. § 1.36(b), filed December 13, 2007.

The request is **APPROVED**.

A grantable request to withdraw as attorney/agent of record must be signed by every attorney/agent seeking to withdraw or contain a clear indication that one attorney is signing on behalf of another/others. A request to withdraw will not be approved unless at least 30 (thirty) days would remain between the date of approval and the later of the expiration date of a time to file a response or the expiration date of the maximum time period which can be extended under 37 C.F.R. § 1.136(a).

The request was signed by Jonathan Alan Quine on behalf of all attorneys of record who are associated with customer No. 22798.

All attorneys/agents associated with the Customer Number 27980 have been withdrawn.

Applicant is reminded that there is no attorney of record at this time.

The request to change the correspondence of record is not acceptable as the requested correspondence address is not that of: (1) the first named signing inventor; or (2) an intervening assignee of the entire interest under 37 C.F.R 3.71. All future communications from the Office will be directed to the first named signing inventor at the first copied address below until otherwise properly notified by the applicant.

In order to request or take action in a patent matter, the assignee must establish its ownership of the patent to the satisfaction of the Director. In this regard, a Statement under 37 CFR 3.73(b) must have either: (i) documentary evidence of a chain of title from the original owner to the assignee (*e.g.*, copy of an executed assignment), and a statement affirming that the documentary evidence of the chain of title from the original owner to the assignee was or concurrently is being submitted for recordation pursuant to § 3.11; or (ii) a statement specifying where documentary evidence of a chain of title from the original owner to the assignee is recorded in the assignment records of the Office (*e.g.*, reel and frame number).

There is an outstanding Office action mailed April 30, 2008 that requires a reply from the applicant.

Telephone inquiries concerning this decision should be directed to undersigned at 571-272-142.

April M. Wise
Petitions Examiner
Office of Petitions

cc: EDWARD W. WOODHALL
10450 WEST LOYOLA DRIVE
LOS ALTOS, CA 94022

cc: BEYER WEAVER, LLP
500 12TH STREET
SUITE 200
OAKLAND, CA 94607

UNITED STATES PATENT AND TRADEMARK OFFICE

UNITED STATES DEPARTMENT OF COMMERCE
United States Patent and Trademark Office
Address: COMMISSIONER FOR PATENTS
P.O. Box 1450
Alexandria, Virginia 22313-1450
www.uspto.gov

APPLICATION NUMBER	FILING OR 371(C) DATE	FIRST NAMED APPLICANT	ATTY. DOCKET NO./TITLE
10/857,180	05/28/2004	Edward W. Woodhall	301-004510US

CONFIRMATION NO. 9427

POWER OF ATTORNEY NOTICE

22798
QUINE INTELLECTUAL PROPERTY LAW GROUP, P.C.
P O BOX 458
ALAMEDA, CA 94501

OC000000030592849

Date Mailed: 06/20/2008

NOTICE REGARDING CHANGE OF POWER OF ATTORNEY

This is in response to the Power of Attorney filed 12/13/2007.

- The withdrawal as attorney in this application has been accepted. Future correspondence will be mailed to the new address of record. 37 CFR 1.33.

/amwise/

Office of Data Management, Application Assistance Unit (571) 272-4000, or (571) 272-4200, or 1-888-786-0101

UNITED STATES PATENT AND TRADEMARK OFFICE

Commissioner for Patents
United States Patent and Trademark Office
P.O. Box 1450
Alexandria, VA 22313-1450
www.uspto.gov

Weaver Austin Villeneuve & Sampson, LLP
P.O. Box 70250
Oakland, CA 94612-0250

MAILED

OCT 22 2009

OFFICE OF PETITIONS

In re Application of	:	
Edward W. Woodhall et al.	:	
Application No. 10/857,180	:	DECISION ON PETITION
Filed: May 28, 2004	:	
Attorney Docket No. CALWP005US	:	

This is a decision on the petition under the unintentional provisions of 37 CFR 1.137(b), filed July 30, 2009, to revive the above-identified application.

The petition is **DISMISSED**.

Any request for reconsideration of this decision must be submitted within TWO (2) MONTHS from the mail date of this decision. Extensions of time under 37 CFR 1.136(a) are permitted. The reconsideration request should include a cover letter entitled "Renewed Petition under 37 CFR 1.137(b)." This is **not** a final agency action within the meaning of 5 U.S.C. § 704.

The application became abandoned for failure to reply in a timely manner to the non-final Office action mailed January 12, 2009, which set a shortened statutory period for reply of three (3) months. No extensions of time under the provisions of 37 CFR 1.136(a) were obtained. Accordingly, the application became abandoned on April 13, 2009. A Notice of Abandonment was mailed on August 6, 2009.

A grantable petition under 37 CFR 1.137(b) must be accompanied by: (1) the required reply, unless previously filed; (2) the petition fee as set forth in 37 CFR 1.17(m); (3) a statement that the entire delay in filing the required reply from the due date for the reply until the filing of a grantable petition pursuant to 37 CFR 1.137(b) was unintentional; and (4) any terminal disclaimer (and fee as set forth in 37 CFR 1.20(d)) required by 37 CFR 1.137(d). Where there is a question as to whether either the abandonment or the delay in filing a petition under 37 CFR 1.137 was unintentional, the Director may require additional information. See MPEP 711.03(c)(II)(C) and (D). The instant petition lacks item (1).

As to item (1) an extension of time is not a proper reply to a non-final office action.

It should also be noted than an extension of time under 37 CFR 1.136 must be filed prior to the expiration of the maximum extendable period for reply. *See* In re Application of S., 8 USPQ2d 1630, 1631 (Comm'r Pats. 1988). Since the $555 extension of time fee submitted with the petition on July 30, 2009 was subsequent to the maximum extendable period for reply, this fee is unnecessary and will be credited to petitioner's deposit account.

Further correspondence with respect to this matter should be addressed as follows:

By Mail: Mail Stop PETITION
Commissioner for Patents
P. O. Box 1450
Alexandria, VA 22313-1450

By hand: U. S. Patent and Trademark Office
Customer Service Window, Mail Stop Petitions
Randolph Building
401 Dulany Street
Alexandria, VA 22314

The centralized facsimile number is **(571) 273-8300.**

Telephone inquiries concerning this decision should be directed to Kimberly Inabinet at (571) 272-4618.

Carl Friedman
Petitions Examiner
Office of Petitions

UNITED STATES PATENT AND TRADEMARK OFFICE

Commissioner for Patents
United States Patent and Trademark Office
P.O. Box 1450
Alexandria, VA 22313-1450
www.uspto.gov

Weaver Austin Villeneuve & Sampson, LLP
P.O. Box 70250
Oakland, CA 94612-0250

COPY MAILED
JAN 13 2010

In re Application of	:	
Edward W. Woodhall et al.	:	
Application No. 10/857,180	:	DECISION ON PETITION
Filed: May 28, 2004	:	
Attorney Docket No. CALWP005US	:	

This is a decision on the renewed petition under the unintentional provisions of 37 CFR 1.137(b), filed November 9, 2009, to revive the above-identified application.

The petition is **GRANTED**.

The application became abandoned for failure to reply in a timely manner to the non-final Office action mailed January 12, 2009, which set a shortened statutory period for reply of three (3) months. No extensions of time under the provisions of 37 CFR 1.136(a) were obtained. Accordingly, the application became abandoned on April 13, 2009. A Notice of Abandonment was mailed on August 6, 2009.

The petition satisfies the requirements of 37 CFR 1.137(b) in that petitioner has supplied (1) the reply in the form of a continuing application under 37 CFR 1.53(b), (2) the petition fee of $810 and (3) a proper statement of unintentional delay. Accordingly, the filing of a continuing application under 37 CFR 1.53(b) is accepted as being unintentionally delayed.

The petition decision mailed October 22, 2009 dismissed the petition filed on July 30, 2009 for failure to provide a proper reply. The renewed petition includes a proper reply.

The application is being revived solely for purposes of continuity. As continuity has been established by this decision reviving the application, the application is again abandoned in favor of a continuing application under 37 CFR 1.53(b).

Telephone inquiries concerning this decision should be directed to Kimberly Inabinet at (571) 272-4618.

Carl Friedman
Petitions Examiner
Office of Petitions

UNITED STATES PATENT AND TRADEMARK OFFICE

Commissioner for Patents
United States Patent and Trademark Office
P.O. Box 1450
Alexandria, VA 22313-1450
www.uspto.gov

MCDERMOTT WILL & EMERY LLP
600 13TH STREET, N.W.
WASHINGTON DC 20005-3096

COPY MAILED

FEB 11 2008

OFFICE OF PETITIONS

In re Application of	:	
Robert Hickman	:	
Application No. 10/857,182	:	DECISION GRANTING PETITION
Filed: June 1, 2004	:	UNDER 37 CFR 1.313(c)(2)
Attorney Docket No. 63288-652	:	

This is a decision on the petition under 37 CFR 1.313(c)(2), filed February 8, 2008, to withdraw the above-identified application from issue after payment of the issue fee.

The petition is **GRANTED**.

The above-identified application is withdrawn from issue for consideration of a submission under 37 CFR 1.114 (request for continued examination). *See* 37 CFR 1.313(c)(2).

Petitioner is advised that the issue fee paid on February 1, 2008 cannot be refunded. If, however, this application is again allowed, petitioner may request that it be applied towards the issue fee required by the new Notice of Allowance.[1]

Telephone inquiries should be directed to the undersigned at (571) 272-3208.

This application is being referred to Technology Center AU 2624 for processing of the request for continued examination under 37 CFR 1.114 and for consideration of the concurrently filed IDS.

Karen Creasy

Karen Creasy
Petitions Examiner
Office of Petitions

---

[1] *The request to apply the issue fee to the new Notice may be satisfied by completing and returning the new Part B – Fee(s) Transmittal Form (along with any balance due at the time of submission). Petitioner is advised that the Issue Fee Transmittal Form* ***must*** *be completed and timely submitted to avoid abandonment of the application.*

OIPE IAP42
MAR 10 2008
PATENT & TRADEMARK OFFICE

1 Fee DAC (I) $

Docket No.: 063288-0652

PATENT

IN THE UNITED STATES PATENT AND TRADEMARK OFFICE

In re Application of	:	Customer Number: 20277
Robert HICKMAN	:	Confirmation Number: 9423
Application No.: 10/857,182	:	Group Art Unit: 2624
Filed: June 01, 2004	:	Examiner: Seyed H. AZARIAN

For: SINGLE PASS OFF-LINE VIDEO ENCODING

REQUEST TO APPLY PREVIOUSLY PAID ISSUE FEE

Mail Stop **ISSUE FEE**
Commissioner for Patents
P.O. Box 1450
Alexandria, VA 22313-1450

Sir:

Applicant is in receipt of the Decision on the Petition Under 37 CFR 1.313(c)(2), dated February 11, 2008, in connection with the above-identified application and respectfully requests that the Issue Fee paid on ~~November~~ FEBRUARY 1, 2008, be applied to the attached new Issue Fee Transmittal..

A copy of the Decision is attached.

Respectfully submitted,

McDERMOTT WILL & EMERY LLP

Keith E. George

Keith E. George
Registration No. 34,111

600 13th Street, N.W.
Washington, DC 20005-3096
Phone: 202.756.8000 KEG:kh
Facsimile: 202.756.8087
Date: March 10, 2008

Please recognize our Customer No. 20277 as our correspondence address.

UNITED STATES PATENT AND TRADEMARK OFFICE

Commissioner for Patents
United States Patent and Trademark Office
P.O. Box 1450
Alexandria, VA 22313-1450
www.uspto.gov

OIPE IAP42
MAR 10 2008
PATENT & TRADEMARK OFFICE

RECEIVED
FEB 14 2008
McDermott Will & Emery LLP
DC Office

MCDERMOTT WILL & EMERY LLP
600 13TH STREET, N.W.
WASHINGTON DC 20005-3096

COPY MAILED
FEB 11 2008
OFFICE OF PETITIONS

In re Application of	:	
Robert Hickman	:	
Application No. 10/857,182	:	DECISION GRANTING PETITION
Filed: June 1, 2004	:	UNDER 37 CFR 1.313(c)(2)
Attorney Docket No. 63288-652	:	

This is a decision on the petition under 37 CFR 1.313(c)(2), filed February 8, 2008, to withdraw the above-identified application from issue after payment of the issue fee.

The petition is **GRANTED**.

The above-identified application is withdrawn from issue for consideration of a submission under 37 CFR 1.114 (request for continued examination). *See* 37 CFR 1.313(c)(2).

Petitioner is advised that the issue fee paid on February 1, 2008 cannot be refunded. If, however, this application is again allowed, petitioner may request that it be applied towards the issue fee required by the new Notice of Allowance.[1]

Telephone inquiries should be directed to the undersigned at (571) 272-3208.

This application is being referred to Technology Center AU 2624 for processing of the request for continued examination under 37 CFR 1.114 and for consideration of the concurrently filed IDS.

Karen Creasy

Karen Creasy
Petitions Examiner
Office of Petitions

---

[1] *The request to apply the issue fee to the new Notice may be satisfied by completing and returning the new Part B – Fee(s) Transmittal Form (along with any balance due at the time of submission). Petitioner is advised that the Issue Fee Transmittal Form must be completed and timely submitted to avoid abandonment of the application.*

UNITED STATES PATENT AND TRADEMARK OFFICE

Commissioner for Patents
United States Patent and Trademark Office
P.O. Box 1450
Alexandria, VA 22313-1450
www.uspto.gov

JOHN S. PRATT, ESQ
KILPATRICK STOCKTON, LLP
1100 PEACHTREE STREET
ATLANTA, GA 30309

COPY MAILED

NOV 07 2007

OFFICE OF PETITIONS

In re Application of	:	
Robert J. Lawless	:	
Application No. 10/857,184	:	ON PETITION
Filed: May 28, 2004	:	
Attorney Docket No. 51595-310723	:	

This is a decision on the petition under 37 CFR 1.137(b), filed on January 24, to revive the above-identified application.

The application became abandoned for failure to respond to the non-final Office action mailed June 20, 2006. A Notice of Abandonment was mailed on January 5, 2007.

It is not apparent whether the statement of unintentional delay was signed by a person who would have been in a position of knowing that the entire delay in filing the required reply from the due date for the reply until the filing of a grantable petition pursuant to 37 CFR 1.137(b) was unintentional. Nevertheless, in accordance with 37 CFR 10.18, the statement is accepted as constituting a certification of unintentional delay. However, in the event that petitioner has no knowledge that the delay was unintentional, petitioner must make such an inquiry to ascertain that, in fact, the delay was unintentional. If petitioner discovers that the delay was intentional, petitioner must so notify the Office.

The change of correspondence address filed on January 23, 2007 has not been accepted, since there is no indication that the person signing the instant petition was ever given a power of attorney or authorization of agent to prosecute the above-identified application. However, in accordance with 37 CFR 1.34(a), the signature of Christopher J. Chan appearing on the petition shall constitute a representation to the United States Patent and Trademark Office that he is authorized to represent the particular party in whose behalf he acts.

The petition satisfies the requirements of 37 CFR 1.137(b), in that, petitioner has supplied (1) the reply in the form of an amendment; (2) the petition fee of $750; and (3) an adequate statement of unintentional delay. Therefore, the petition is **GRANTED**.

The Office acknowledges receipt of $510 for a three (3) months extension of time filed on January 24, 2007. However, an extension of time under 37 CFR 1.136 must be filed prior to the expiration of the maximum extendable period for reply. See In re Application of S., 8 USPQ2d 1630, 1631 (Comm'r. Pats. 1988). Accordingly, since the $510 extension of time was subsequent to the maximum extendable period for reply, this fee is unnecessary and will be credited to petitioner=s deposit account.

If petitioner desires to receive future correspondence regarding this application, the appropriate power of attorney or authorization of agent must be submitted. A courtesy copy of this decision is being mailed to petitioner. Nevertheless, all future correspondence regarding this application file will be directed solely to the address of record until otherwise instructed.

This application file is being referred to Technology Center Art Unit 3651, for review of the amendment filed with the instant petition.

Telephone inquiries concerning this decision should be directed to the undersigned at (571) 272-3226.

Andrea Smith
Petitions Examiner
Office of Petitions

cc: Christopher J. Chan
SUTHERLAND ASBILL & BRENNAN, LLP
999 PEACHTREE STREET, N.E.
ATLANTA, GA 30309

UNITED STATES PATENT AND TRADEMARK OFFICE

Commissioner for Patents
United States Patent and Trademark Office
P.O. Box 1450
Alexandria, VA 22313-1450
www.uspto.gov

STEPTOE & JOHNSON LLP
2121 AVENUE OF THE STARS
SUITE 2800
LOS ANGELES CA 90067

COPY MAILED
OCT 27 2008
OFFICE OF PETITIONS

In re Application of	:	
LOWE, Jerry D. et al.	:	
Application No. 10/857,194	:	DECISION ON PETITION
Filed: May 28, 2004	:	TO WITHDRAW
Attorney Docket No. **10665/4**	:	FROM RECORD
	:	

This is a decision on the Request to Withdraw as attorney or agent of record under 37 C.F.R. § 1.36(b), filed September 23, 2008.

The request is **APPROVED**.

A grantable request to withdraw as attorney/agent of record must be signed by every attorney/agent seeking to withdraw or contain a clear indication that one attorney is signing on behalf of another/others. The Office requires the practitioner(s) requesting withdrawal to certify that he, she, or they have: (1) given reasonable notice to the client, prior to the expiration of the response period, that the practitioner(s) intends to withdraw from employment; (2) delivered to the client or a duly authorized representative of the client all papers and property (including funds) to which the client is entitled; and (3) notified the client of any responses that may be due and the time frame within which the client must respond, pursuant 37 CFR 10.40(c).

The request was signed by Robert Kovelman on behalf of all attorneys of record who are associated with customer No. 30076. All attorneys/agents associated with the Customer Number 30076 have been withdrawn. Applicant is reminded that there is no attorney of record at this time.

The request to change the correspondence address of record is not acceptable as the requested correspondence address is not that of: (1) the first named signing inventor; or (2) an intervening assignee of the entire interest under 37 C.F.R 3.71. All future communications from the Office will be directed to the first named signing inventor at the first copied address below until otherwise properly notified by the applicant.

There is an outstanding Office action mailed August 18, 2008 that requires a reply from the applicant.

Telephone inquiries concerning this decision should be directed to Tredelle Jackson at 571-272-2783.

Tredelle D. Jackson
Paralegal Specialist
Office of Petitions

cc: **JERRY D. LOWE**
P.O. BOX 978
WOODLAND PARK CO 80866

cc: **GENESIS 3 ENGINEERING, INC.**
800 RESEARCH DRIVE, SUITE 160
WOODLAND PARK CO 80863

UNITED STATES PATENT AND TRADEMARK OFFICE

Commissioner for Patents
United States Patent and Trademark Office
P.O. Box 1450
Alexandria, VA 22313-1450
www.uspto.gov

August 9, 2007

Neil A Steinberg
Suite 1150
2665 Marine Way
Mountain View, CA 94043

Patent No.: 7,181,720 B2
Application No.: 10/857,212
Inventor(s): Ansgar Stammermann
Issued: February 20, 2007
Title: **PROCESS AND DEVICE FOR CIRCUIT DESIGN BY MEANS OF HIGH-LEVEL SYNTHESIS**

Re: Request for Certificate of Correction

Consideration has been given your request for the issuance of a certificate of correction for the above-identified patent under the provisions of Rule(s) 1.322 and/or 1.323.

Assignees' names and addresses (assignment data) printed in a patent, are based *solely* on information supplied in the appropriate space for identifying the assignment data, i.e., item 3 of the Issue Fee Transmittal Form PTOL-85B. Granting of a request under 37 CFR 3.81(b) is required to correct applicant's error providing ***incorrect or erroneous*** assignment data, *before* issuance of a Certificate of Correction, under 37 CFR 1.323 *(see Manual of Patent Examining Procedures (M.P.E.P) Chp.1400, sect. 1481).* This procedure is required *at any time after the issue fee is paid*, including after issuance of the patent.

In view of the foregoing, your request, in this matter, is hereby denied.

A request to correct the Assignee under 37 CFR 3.81(b) should include:

A. **the processing fee set forth in 37 CFR 1.117(h) (currently $130);**
B. a statement that the failure to include the correct assignee name on the PTOL-85B was inadvertent; and
C. a copy of the Notice of Recordation of Assignment Document, reflecting the reel and frame number where the assignment(s) is recorded and/or reflecting proof of *the date* the assignment was submitted for recordation.

In the Request, Applicant(s) may request that the file be forwarded to Certificates of Correction Branch, for issuance of a Certificate of Correction, if the Request is granted.

Any request under 37 CFR 3.81(b) should be directed to the following address or facsimile number:

By mail:	Mail Stop PETITIONS Commissioner for Patents Post Office Box 1450 Alexandria, VA 22313-1450
By hand:	Customer Service Window Mail Stop Petitions Randolph Building 40l Dulany Street Alexandria, VA 22314
By fax:	(571) 273-0025 ATTN: Office of Petitions

If a fee (currently $100) was previously submitted for consideration of a Request for Certificate of Correction, under CFR 1.323, to correct assignment data, no additional fee is required.

Virginia Tolbert
For Cecelia Newman
Decisions & Certificate of Correction Branch
(703) 305-8309 or (703) **308-9390 ext 113**

vt

UNITED STATES PATENT AND TRADEMARK OFFICE

Commissioner for Patents
United States Patent and Trademark Office
P.O. Box 1450
Alexandria, VA 22313-1450
www.uspto.gov

NEIL STEINBERG
2300 M STREET, N.W., SUITE 800
WASHINGTON DC 20037

COPY MAILED
OCT 3 1 2008
OFFICE OF PETITIONS

In re Patent No. 7,181,720	:	
Application No. 10/857,212	:	
Filed: May 28, 2004	:	ON PETITION
Issued: February 20, 2007	:	
Attorney Docket No. 205-E.001	:	

This is a decision on the petition filed August 30, 2007, which is being treated as a request under 37 CFR 3.81(b)[1] to add the name of the assignee on the front page of the above-identified patent by way of a Certificate of Correction.

The request is **GRANTED**.

This matter is being referred to the Certificates of Correction Branch for issuance of the requested Certificate of Correction.

Telephone inquiries concerning this decision may be directed to Joan Olszewski at (571) 272-7751. Inquiries regarding the issuance of a certificate of correction should be directed to the Certificate of Correction Branch at (571) 272-4200.

/Liana Walsh/
Liana Walsh
Petitions Examiner
Office of Petitions

[1] *See* MPEP 1309, subsection II; and Official Gazette of June 22, 2004.

Paper No.: _____

DATE : 6/02/09

TO SPE OF : ART UNIT 2884

SUBJECT : Request for Certificate of Correction for Appl. No.: 10857215 Patent No.: 7148485 B2

Please respond to this request for a certificate of correction within 7 days.

FOR IFW FILES:

Please review the requested changes/corrections as shown in the **COCIN** document(s) in the IFW application image. No new matter should be introduced, nor should the scope or meaning of the claims be changed.

Please complete the response (see below) and forward the completed response to scanning using document code **COCX**.

FOR PAPER FILES:

Please review the requested changes/corrections as shown in the attached certificate of correction. Please complete this form (see below) and forward it with the file to:

Certificates of Correction Branch (CofC)
South Tower - 9A22
Palm Location 7580
You can fax the Directors/SPE response to 571-270-9990

LAMONTE NEWSOME

Certificates of Correction Branch

703-308-9390 ext. 112

Thank You For Your Assistance

The request for issuing the above-identified correction(s) is hereby:
Note your decision on the appropriate box.

- [x] **Approved** — **All** changes apply.
- [ ] **Approved in Part** — Specify below which changes **do not** apply.
- [ ] **Denied** — State the reasons for denial below.

Comments: _____

DAVID PORTA
SUPERVISORY PATENT EXAMINER
SPE

2884
Art Unit

UNITED STATES PATENT AND TRADEMARK OFFICE

Commissioner for Patents
United States Patent and Trademark Office
P.O. Box 1450
Alexandria, VA 22313-1450
www.uspto.g

MOTOROLA INC.
600 NORTH US HIGHWAY 45
W4-39Q
LIBERTYVILLE, IL 60048-5343

COPY MAILED

AUG 0 7 2008

OFFICE OF PETITIONS

In re Application of	:	
Aerrabotu et al.	:	
Application No. 10/857,242	:	DECISION ON PETITION
Filed: May 28, 2004	:	
Attorney Docket No. CS23813RL	:	

This is a decision on the petition under the unintentional provisions of 37 CFR 1.137(b), filed January 17, 2008, to revive the above-identified application.

The petition is **GRANTED**.

The application became abandoned for failure to reply in a timely manner to the non-final Office action mailed June 1, 2007, which set a shortened statutory period for reply of three (3) months. No extensions of time under the provisions of 37 CFR 1.136(a) were obtained. Accordingly, the application became abandoned on September 2, 2007. A Notice of Abandonment was mailed January 2, 2008.

The petition satisfies the requirements of 37 CFR 1.137(b) in that petitioner has supplied (1) the reply in the form of an Amendment, (2) the petition fee of $1,540.00, and (3) an adequate statement of unintentional delay.

37 CFR 1.137(b)(3) requires a statement that "the entire delay in filing the required reply from the due date for the reply until the filing of a grantable petition pursuant to 37 CFR 1.137(b) was unintentional." Since the statement appearing in the petition varies from the language required by 37 CFR 1.137(b)(3), the statement is being construed as the required statement. Petitioner must notify the Office if this is **not** a correct reading of the statement appearing in the petition.

Telephone inquiries concerning this decision should be directed to Joan Olszewski at (571) 272-7751.

This application is being referred to Technology Center AU 2617 for appropriate action by the Examiner in the normal course of business on the reply received.

Liana Walsh
Petitions Examiner
Office of Petitions

UNITED STATES PATENT AND TRADEMARK OFFICE

UNITED STATES DEPARTMENT OF COMMERCE
United States Patent and Trademark Office
Address: COMMISSIONER FOR PATENTS
P.O. Box 1450
Alexandria, Virginia 22313-1450
www.uspto.gov

FISH & RICHARDSON P.C.
PO BOX 1022
MINNEAPOLIS, MN 55440-1022

Mail Date: 04/20/2010

Applicant	: Richard E. Crandall	: DECISION ON REQUEST FOR
Patent Number	: 7603560	: RECALCULATION of PATENT
Issue Date	: 10/13/2009	: TERM ADJUSTMENT IN VIEW
Appliction No	: 10/857,250	: OF WYETH AND NOTICE OF INTENT TO
Filed	: 05/27/2004	: ISSUE CERTIFICATE OF CORRECTION
		:

The Request for Recalculation is **GRANTED** to the extent indicated.

The patent term adjustment has been determined to be **1413** days. The USPTO will *sua sponte* issue a certificate of correction reflecting the amount of PTA days determined by the recalculation.

Prior to the issuance of the certificate of correction, the USPTO will afford patentee an opportunity to be heard and request reconsideration. Accordingly, patentee has **one month or thirty (30) days**, whichever is longer, to file a request for reconsideration of this patent term adjustment calculation. See 35 U.S.C. 154(b)(3)(B)(ii) and 37 CFR 1.322(a)(4). No extensions of time will be granted under 37 CFR 1.136.

Patentee should use document code PET.OP if electronically filing a request for reconsideration of this patent term adjustment calculation. The patentee must also include the information required by 37 CFR 1.705(b)(2) and the fee required by 37 CFR 1.18(e). If patentee does not file a timely request for reconsideration of this patent term adjustment calculation including the information required by 37 CFR 1.705(b)(2) and the fee required by 37 CFR 1.18(e), the USPTO will issue a certificate of correction reflecting the PTA determination noted above.

Patentee should be aware that in order to preserve the right to review in the United States District Court for the District of Columbia of the USPTO patent term adjustment determination, patentee must ensure that he or she also take the steps required under 35 U.S.C. 154(b)(4)(A) in a timely manner. Nothing in the request for recalculation should be construed as providing an alternative time frame for commencing a civil action under 35 U.S.C. 154(b)(4)(A).

Any questions concerning this decision should be directed to the Office of Patent Legal Administration at 571-272-7702.

UNITED STATES PATENT AND TRADEMARK OFFICE

UNITED STATES DEPARTMENT OF COMMERCE
United States Patent and Trademark Office
Address: COMMISSIONER FOR PATENTS
P.O. Box 1450
Alexandria, Virginia 22313-1450
www.uspto.gov

FISH & RICHARDSON P.C.
PO BOX 1022
MINNEAPOLIS, MN 55440-1022

Mail Date: 05/17/2010

Applicant : Richard E. Crandall
Patent Number : 7603560
Issue Date : 10/13/2009
Application No : 10/857,250
Filed : 05/27/2004

: NOTICE CONCERNING IMPROPER
: CALCULATION OF PATENT TERM
: ADJUSTMENT BASED UPON USPTO
: IMPROPERLY MEASURING REDUCTION
: PERIOD UNDER 37 CFR 1.704(c)(10).

The United States Patent and Trademark Office (USPTO) discovered that in processing the recent recalculation decisions mailed in response to patentee's filed Request for Recalculation of Patent Term Adjustment in view of Wyeth, the USPTO improperly measured the reduction period for reductions under 37 CFR 1.704(c)(10). Pursuant to 37 CFR 1.704(c)(10), patentee's reduction begins on the date of filing the amendment under 37 CFR 1.312 ("1.312 amendment") or other related paper and ends on the date that the Office mails a response to the filing of the 1.312 amendment or other paper. It has been discovered that during the recalculation, the calculation failed to the limit the reduction to the mail date of the response to the 1.312 amendment or other paper. Accordingly, patentee's reductions were greater than warranted.

This notice **VACATES** the previous GRANTED request for recalculation and provides patentee with a revised GRANTED recalculation.

The patent term adjustment has been determined to be **1446** days. The USPTO will *sua sponte* issue a certificate of correction reflecting the amount of patent term adjustment (PTA) days determined by the recalculation.

Prior to the issuance of the certificate of correction, the USPTO will afford patentee an opportunity to be heard and request reconsideration. Accordingly, patentee has **one month or thirty (30) days** from the mail date of this notice, whichever is longer, to file a request for reconsideration of this PTA calculation. See 35 U.S.C. § 154(b)(3)(B)(ii) and 37 CFR 1.322(a)(4).

Patentee should use document code PET.OP if electronically filing a request for reconsideration of this PTA calculation. The patentee must also include the information required by 37 CFR 1.705(b)(2), and the fee required by 37 CFR 1.18(e). If patentee does not file a timely request for reconsideration of this PTA calculation, including the information required by 37 CFR 1.705(b)(2) and the fee required by 37 CFR 1.18(e), the USPTO will issue a certificate of correction reflecting the PTA determination noted above.

Patentee should be aware that in order to preserve the right of review of the USPTO's PTA determination in the United States District Court for the District of Columbia, patentee must ensure that the steps required under 35 U.S.C. § 154 (b)(4) are taken in a timely manner. Nothing in the request for recalculation should be construed as providing an alternative time frame for commencing a civil action under 35 U.S.C. § 154(b)(4).

UNITED STATES PATENT AND TRADEMARK OFFICE

Commissioner for Patents
United States Patent and Trademark Office
P.O. Box 1450
Alexandria, VA 22313-1450
www.uspto.gov

KNOBBE MARTENS OLSON & BEAR LLP
2040 MAIN STREET
FOURTEENTH FLOOR
IRVINE CA 92614

MAILED

APR 01 2010

OFFICE OF PETITIONS

In re Patent No. 7,543,990	:	
Issued: June 9, 2009	:	
Application No. 10/857,257	:	ON PETITION
Filed: May 27, 2004	:	
Attorney Docket No. MEISS85.002AUS	:	

This is a decision on the petition, filed January 28, 2010, which is being treated as a request under 37 CFR 3.81(b)[1] to change the assignee on the issued patent.

The request is **DISMISSED**.

37 CFR 3.81(a) permits the patent to issue to the assignee, provided that, at the time the issue fee is paid, the name and correct address of an assignee is provided. 37 CFR 3.81(b) permits the patent to issue in the name and correct address of an assignee if the assignment was submitted after payment of the issue fee but ***prior to issuance of a patent***. Patent and Trademark Office assignment records disclose that an assignment correcting the assignee's name from "ZWEIGNIEDERLASSUNG DER HUHTAMAKI DEUTSCHLAND" to "HUHTAMAKI RONSBERG, ZWEIGNIEDERLASSUNG DER HUHTAMAKI DEUTSCHLAND GMBH & CO. KG" was recorded on October 14, 2009, after the date of issuance of this patent.

Accordingly, since the assignment was not submitted for recordation until after issuance of this patent, issuance of a certificate of correction would not be proper. *See* MPEP Section 307.

Inquiries concerning this decision should be directed to the undersigned at (571) 272-7751.

Joan Olszewski

Joan Olszewski
Petitions Examiner
Office of Petitions

[1] *See* Official Gazette of June 22, 2004

UNITED STATES PATENT AND TRADEMARK OFFICE

Commissioner for Patents
United States Patent and Trademark Office
P.O. Box 1450
Alexandria, VA 22313-1450
www.uspto.gov

IPSG, P.C.
P.O. BOX 700640
SAN JOSE, CA 95170-0640

COPY MAILED

JUL 21 2005

OFFICE OF PETITIONS

In re Application of :
Niel Esary et al :
Application No. 10/857,262 : DECISION GRANTING PETITION
Filed: May 28, 2004 : UNDER 37 CFR 1.137(b)
Attorney Docket No. VNDV-P004 :

This is a decision on the petition, filed June 29, 2005, which is being treated as a petition under 37 CFR 1.137(b) to revive the instant nonprovisional application for failure to timely notify the U.S. Patent and Trademark Office (USPTO) of the filing of an application in a foreign country, or under a multinational treaty that requires publication of applications eighteen months after filing. *See* 37 CFR 1.137(f).

The petition is **DISMISSED**.

Any request for reconsideration of this decision must be filed within TWO MONTHS from the mail date of this decision. Extensions of time are available pursuant to the provisions of 37 CFR 1.136(a).

A petition under 37 CFR 1.137(f) must be accompanied by:

(1) the reply which is met by the notification of such filing in a foreign country or under a multinational treaty;

(2) the petition fee as set forth in 37 CFR 1.17(m); and

(3) a statement that the entire delay in filing the required reply from the due date of the reply until the filing of a grantable petition was unintentional.

The petition fails to comply with item (1) above. More specifically, while notification has been given of the foreign filing, the petition fails to state the date of such foreign filing. Accordingly, the date of foreign filing must be supplied

in order to grant the revival of the instant application. Further correspondence with respect to this matter should be addressed as follows:

By mail: Mail Stop PETITIONS
Commissioner for Patents
Post Office Box 1450
Alexandria, VA 22313-1450

By hand: Customer Service Window
Randolph Building
401 Dulany Street
Alexandria, VA 22314

By fax: (571) 273-8300
ATTN: Office of Petitions

Any questions concerning this matter may be directed to Wan Laymon at (571) 272-3220.

Wan Laymon

Wan Laymon
Petitions Examiner
Office of Petitions
Office of the Deputy Commissioner
for Patent Examination Policy

UNITED STATES PATENT AND TRADEMARK OFFICE

Commissioner for Patents
United States Patent and Trademark Office
P.O. Box 1450
Alexandria, VA 22313-1450
www.uspto.gov

IPSG, P.C.
P.O. BOX 700640
SAN JOSE, CA 95170-0640

COPY MAILED

SEP 15 2005

OFFICE OF PETITIONS

In re Application of	:
Niel Esary et al	:
Application No. 10/857,262	: DECISION GRANTING PETITION
Filed: May 28, 2004	: UNDER 37 CFR 1.137(b)
Attorney Docket No. VNDV-P004	:

This is a decision on the renewed petition under 37 CFR 1.137(b), filed August 24, 2005, to revive the instant nonprovisional application for failure to timely notify the U.S. Patent and Trademark (USPTO) of the filing of an application in a foreign country, or under a multinational treaty that requires publication of applications eighteen months after filing. *See* 37 CFR 1.137(f).

The petition is **GRANTED**.

Petitioner states that the instant nonprovisional application is the subject of an application filed in an eighteen month publication country on April 29, 2005. However, the USPTO was unintentionally not notified of this filing within 45 days subsequent to the filing of the subject application in an eighteen month publication country.

In view of the above, this application became abandoned pursuant to 35 U.S.C. § 122(b)(2)(B)(iii) and 37 CFR 1.213(c) for failure to timely notify the Office of the filing of an application in a foreign country or under a multilateral international agreement that requires publication of applications 18 months after filing.

A petition to revive an application abandoned pursuant to 35 U.S.C. 122(b)(2)(B)(iii) for failure to notify the USPTO of a foreign filing must be accompanied by:

(1) the required reply which is met by the notification of such filing in a foreign country or under a multinational treaty;
(2) the petition fee as set forth in 37 CFR 1.17(m); and
(3) a statement that the entire delay in filing the

required reply from the due date of the reply until the filing of a grantable petition was unintentional.

The instant petition has been found to be in compliance with 37 CFR 1.137(b). Accordingly, the failure to timely notify the USPTO of a foreign or international filing within 45 days after the date of filing of such foreign or international application as provided by 35 U.S.C. § 122(b)(2)(B)(iii) and 37 CFR 1.213(c) is accepted as having been unintentionally delayed.

The previous Request and Certification under 35 U.S.C. § 122(b)(2)(B)(i) has been previously rescinded.

Any inquiries concerning this decision may be directed to the undersigned at (571) 272-3220.

This matter is being referred to Technology Center Art Unit 3624 for examination in due course.

Wan Laymon

Wan Laymon
Petitions Examiner
Office of Petitions
Office of the Deputy Commissioner
for Patent Examination Policy

UNITED STATES PATENT AND TRADEMARK OFFICE

Commissioner for Patents
United States Patent and Trademark Office
P.O. Box 1450
Alexandria, VA 22313-1450
www.uspto.gov

COPY MAILED

SEP 08 2005

OFFICE OF PETITIONS

IPSG, P.C.
P.O. BOX 700640
SAN JOSE, CA 95170-0640

In re Application of	:	
Esary, et al.	:	
Application No. 10/857,263	:	DECISION ON PETITION UNDER
Application Filing Date: May 28, 2004	:	37 CFR 1.137(f)
Attorney Docket No. VNDV-P003		

This is a decision on the petition under 37 CFR 1.137(f), filed June 29, 2005, to revive the instant non-provisional application.

The petition under 37 CFR 1.137(f) is granted.

This application became abandoned pursuant to 35 U.S.C. § 122(b)(2)(B(iii) for failure to timely notify the Office of the filing of an application in a foreign country.

A petition under 37 CFR 1.137(f) must be accompanied by: (1) the reply which is met by the notification of such filing in a foreign country or under a multinational treaty[1]; (2) the petition fee as set forth in 37 CFR 1.17(m), and (3) a statement that the entire delay in filing the required reply from the due date of the reply until the filing of a grantable petition was unintentional. The Commissioner may require additional information where there is a question whether the delay was unintentional.

The instant petition is found in compliance with 37 CFR 1.137(f).

Accordingly, the failure to timely notify the Office of a foreign filing within 45 days as provided by 35 U.S.C. § 122(b)(2)(B)(iii) is accepted as having been unintentionally delayed.

The application file is being directed to the Technology Center 2100, GAU 2161, for further processing.

Further inquiries regarding this decision may be directed to the undersigned at (571) 272-3222.

Kenya A. McLaughlin

Kenya A. McLaughlin
Petitions Attorney
Office of Petitions

[1] The filing of a petition under this section will not relieve applicant of his obligation to reply to any outstanding Office action.

UNITED STATES PATENT AND TRADEMARK OFFICE

Commissioner for Patents
United States Patent and Trademark Office
P.O. Box 1450
Alexandria, VA 22313-1450
www.uspto.gov

COPY MAILED

JUN 2 6 2009

OFFICE OF PETITIONS

DIGIMARC CORPORATION
9405 SW GEMINI DRIVE
BEAVERTON OR 97008

In re Application of	:	
Geoffrey B. Rhoads	:	
Application No. 10/857,266	:	DECISION DISMISSING PETITION
Filed: May 28, 2004	:	UNDER 37 CFR 1.78(a)(3)
Attorney Docket No. P0991	:	

This is a decision on the petition under 37 CFR 1.78(a)(3), filed October 23, 2008, to accept an unintentionally delayed claim under 35 U.S.C. §120 for the benefit of priority to prior-filed nonprovisional Application No. 08/508,083, filed July 27, 1995.

The petition is **DISMISSED**.

A petition for acceptance of a claim for late priority under 37 CFR 1.78(a)(3) is only applicable to those applications filed on or after November 29, 2000 and after the expiration of the period specified in 37 CFR 1.78(a)(2)(ii). In addition, the petition under 37 CFR 1.78(a)(3) must be accompanied by:

(1) the reference required by 35 U.S.C. § 120 and 37 CFR 1.78(a)(2)(i) of the prior-filed application, unless previously submitted;
(2) the surcharge set forth in § 1.17(t); and
(3) a statement that the entire delay between the date the claim was due under 37 CFR 1.78(a)(2)(ii) and the date the claim was filed was unintentional. The Director may require additional information where there is a question whether the delay was unintentional.

The petition is lacking item (1). The amendment as drafted is unacceptable. The proposed amendment to paragraph [0003] is worded so as to suggest that applicant is NOT claiming priority to Application No. 08/508,083.

Further, a proper chain of copendency must exist from the instant application to the earliest referenced applications. The "Related U.S. Application Data" paragraph of Application SN 08/649,419 and 09/186,962 do not have proper priority claims. Application SN 08/649,419 makes no mention of application SN 08/438,159 or 08/508,083. Application SN 09/186,962 makes no mention of application SN 08/438,159. Application 09/186,962 references PCT /US96/06618 as a continuation-in-part of application 08/637,531 rather than a continuation-in-part of application 08/649,419 and the relationship between application 08/637,531 and 08/508,083 is not the same as set forth in the specification of the instant application.

Before the petition can be granted, petitioner must submit an amendment to the specification properly setting forth the claim to priority to Application No. 08/508,083 in paragraph [0003].

Further, , before the petition can be granted, petitioner must file a petition under 37 CFR 1.78(a)(3) in applications No. 08/649,419 and 09/186,962 for delayed claim for priority to correct the above noted inconsistencies in their Related U.S. Application Data paragraphs.

Further correspondence with respect to this matter should be addressed as follows:

By mail: Mail Stop PETITIONS
Commissioner for Patents
Post Office Box 1450
Alexandria, VA 22313-1450

By hand: Customer Service Window
Mail Stop Petitions
Randolph Building
401 Dulany Street
Alexandria, VA 22314

By fax: (571) 273-8300
ATTN: Office of Petitions

Any questions concerning this matter may be directed to Carl Friedman at (571) 272-6842.

David Bucci
Petitions Examiner
Office of Petitions

UNITED STATES PATENT AND TRADEMARK OFFICE

Commissioner for Patents
United States Patent and Trademark Office
P.O. Box 1450
Alexandria, VA 22313-1450
www.uspto.gov

DIGIMARC CORPORATION
9405 SW GEMINI DRIVE
BEAVERTON OR 97008

MAILED

SEP 01 2009

OFFICE OF PETITIONS

In re Application of	:	
Geoffrey B. Rhoads	:	
Application No. 10/857,266	:	DECISION DISMISSING PETITION
Filed: May 28, 2004	:	UNDER 37 CFR 1.78(a)(3)
Attorney Docket No. P0991	:	

This is a decision on the renewed petition under 37 CFR 1.78(a)(3), filed July 1, 2009, to accept an unintentionally delayed claim under 35 U.S.C. §120 for the benefit of priority as set forth in the attached amendment.

The petition is **DISMISSED**.

A petition for acceptance of a claim for late priority under 37 CFR 1.78(a)(3) is only applicable to those applications filed on or after November 29, 2000 and after the expiration of the period specified in 37 CFR 1.78(a)(2)(ii). In addition, the petition under 37 CFR 1.78(a)(3) must be accompanied by:

(1) the reference required by 35 U.S.C. § 120 and 37 CFR 1.78(a)(2)(i) of the prior-filed application, unless previously submitted;
(2) the surcharge set forth in § 1.17(t); and
(3) a statement that the entire delay between the date the claim was due under 37 CFR 1.78(a)(2)(ii) and the date the claim was filed was unintentional. The Director may require additional information where there is a question whether the delay was unintentional.

The petition under 37 CFR 1.78(a)(3) filed October 23, 2008 was dismissed in a decision mailed June 26, 2009 for failure to provide a proper reference of prior filed applications.

The renewed petition is lacking item (1). A proper chain of copendency must exist from the instant application to the earliest referenced applications. The renewed petition includes a revised amendment to the specification however, there are errors in the "Related U.S. Application Data" paragraphs as follows:

1. Application No. 10/306,768 recites in the specification a chain of copendency back to Application No. 08/649,419, which is stated as being a CIP of only PCT/US96/06618. However, the instant application specification indicates that Application No. 08/649,419 is a CIP of five (5) different applications. Therefore, the chain of copendency as set forth in Application No. 10/306,768 is incomplete.

2. Application No. 09/292,569 recites in the specification that it is a CIP of provisional Application No. 60/082,228. However, the specification of Application No. 10/306,768 indicates that Application No. 09/292,569 is also a CIP of 09/186,962 which is a continuation of 08/649,419 which is a CIP of PCT/US96/06618. Therefore there is an inconsistency in the chain of dependency of Application No. 09/292,569.

Petitioner needs to carefully review the "Related U.S. Application Data" paragraph in each application listed in the instant application related data paragraph to ensure complete consistency throughout. Before the petition can be granted, petitioner needs to correct the above noted problems.

The petition fee under 37 CFR 1.17(t) authorized with this renewed petition is not required as the fee was paid with the first petition. The petition fee is refunded to petitioner's deposit account.

Further correspondence with respect to this matter should be addressed as follows:

By mail: Mail Stop PETITIONS
Commissioner for Patents
Post Office Box 1450
Alexandria, VA 22313-1450

By hand: Customer Service Window
Mail Stop Petitions
Randolph Building
401 Dulany Street
Alexandria, VA 22314

By fax: (571) 273-8300
ATTN: Office of Petitions

Any questions concerning this matter may be directed to Carl Friedman at (571) 272-6842.

David Bucci
Petitions Examiner
Office of Petitions

UNITED STATES PATENT AND TRADEMARK OFFICE

Commissioner for Patents
United States Patent and Trademark Office
P.O. Box 1450
Alexandria, VA 22313-1450
www.uspto.gov

COPY MAILED

NOV 06 2009

OFFICE OF PETITIONS

DIGIMARC CORPORATION
9405 SW GEMINI DRIVE
BEAVERTON OR 97008

In re Application of	:
Geoffrey B. Rhoads	:
Application No. 10/857,266	: DECISION ON PETITIONS
Filed: May 28, 2004	: UNDER 37 CFR 1.78(a)(3) AND (a)(6)
Attorney Docket No. P0991	:

This is a decision on the renewed petitions under 37 CFR §§ 1.78(a)(3) and 1.78(a)(6), filed September 28, 2009, to accept an unintentionally delayed claim under 35 U.S.C. §§120 and 119(e) for the benefit of the prior-filed applications set forth in the concurrently filed amendment.

The petitions are **GRANTED.**

A petition for acceptance of a claim for late priority under 37 CFR §§ 1.78(a)(3) and 1.78(a)(6) is only applicable to those applications filed on or after November 29, 2000. Further, the petition is appropriate only after the expiration of the period specified in 37 CFR §§ 1.78(a)(2)(ii) and 1.78(a)(5)(ii). In addition, the petition under 37 CFR §§ 1.78(a)(3) and 1.78(a)(6) must be accompanied by:

(1) the reference required by 35 U.S.C. §§ 120 and 119(e) and 37 CFR §§ 1.78(a)(2)(i) and 1.78(a)(5)(i) of the prior-filed application, unless previously submitted;
(2) the surcharge set forth in § 1.17(t); and
(3) a statement that the entire delay between the date the claim was due under 37 CFR §§ 1.78(a)(2)(ii) and 1.78(a)(5)(ii) and the date the claim was filed was unintentional. The Director may require additional information where there is a question whether the delay was unintentional.

Additionally, the instant nonprovisional application must be pending at the time of filing of the reference to the prior-filed provisional application as required by 37 CFR 1.78(a)(5)(ii). Further,

the nonprovisional application claiming the benefit of the prior-filed provisional application must have been filed within twelve months of the filing date of the prior-filed provisional application. All the above requirements having been satisfied, the late claim for benefit of priority under 35 U.S.C. §§ 120 and 119(e) is accepted as being unintentionally delayed.

The granting of the petition to accept the delayed benefit claim to the prior-filed applications under 37 CFR §§ 1.78(a)(3) and 1.78(a)(6) should not be construed as meaning that this application is entitled to the benefit of the filing date of the prior-filed applications. In order for this application to be entitled to the benefit of the prior-filed applications, all other requirements under 35 U.S.C. §§120 and 1.78(a)(1) and (a)(2) and under 35 U.S.C. §119(e) and 37 CFR 1.78(a)(4) and (a)(5) must be met. Similarly, the fact that the corrected Filing Receipt accompanying this decision on petition includes the prior-filed applications should not be construed as meaning that applicant is entitled to the claim for benefit of priority to the prior-filed applications noted thereon. Accordingly, the examiner will, in due course, consider this benefit claim and determine whether the application is entitled to the benefit of the earlier filing date.

A corrected Filing Receipt, which includes the priority claim to the prior-filed applications, accompanies this decision on petition.

Any questions concerning this matter may be directed to Carl Friedman at (571) 272-6842. All other inquiries concerning either the examination procedures or status of the application should be directed to the Technology Center.

This application is being forwarded to Technology Center Art Unit 2624 for consideration by the examiner of the claim under 35 U.S.C. § §120 and 119(e) of the prior-filed nonprovisional and provisional applications.

David Bucci
Petitions Examiner
Office of Petitions

ATTACHMENT : Corrected Filing Receipt

UNITED STATES PATENT AND TRADEMARK OFFICE

UNITED STATES DEPARTMENT OF COMMERCE
United States Patent and Trademark Office
Address: COMMISSIONER FOR PATENTS
P.O. Box 1450
Alexandria, Virginia 22313-1450
www.uspto.gov

APPLICATION NUMBER	FILING or 371(c) DATE	GRP ART UNIT	FIL FEE REC'D	ATTY.DOCKET.NO	TOT CLAIMS	IND CLAIMS
10/857,266	05/28/2004	2624	1924	P0991	19	3

CONFIRMATION NO. 2266

CORRECTED FILING RECEIPT

23735
DIGIMARC CORPORATION
9405 SW GEMINI DRIVE
BEAVERTON, OR 97008

OC000000038645344

Date Mailed: 11/06/2009

Receipt is acknowledged of this non-provisional patent application. The application will be taken up for examination in due course. Applicant will be notified as to the results of the examination. Any correspondence concerning the application must include the following identification information: the U.S. APPLICATION NUMBER, FILING DATE, NAME OF APPLICANT, and TITLE OF INVENTION. Fees transmitted by check or draft are subject to collection. Please verify the accuracy of the data presented on this receipt. **If an error is noted on this Filing Receipt, please submit a written request for a Filing Receipt Correction. Please provide a copy of this Filing Receipt with the changes noted thereon. If you received a "Notice to File Missing Parts" for this application, please submit any corrections to this Filing Receipt with your reply to the Notice. When the USPTO processes the reply to the Notice, the USPTO will generate another Filing Receipt incorporating the requested corrections**

Applicant(s)

Geoffrey B. Rhoads, West Linn, OR;

Power of Attorney: The patent practitioners associated with Customer Number 23735

Domestic Priority data as claimed by applicant

This application is a CON of 10/306,768 11/26/2002 ABN
which is a DIV of 09/292,569 04/15/1999 ABN
which is a CIP of 09/186,962 11/05/1998 PAT 7,171,016
which is a CON of 08/649,419 05/16/1996 PAT 5,862,260
which is a CIP of PCT/US96/06618 05/07/1996
This application 10/857,266
is a CIP of 08/637,531 04/25/1996 PAT 5,822,436
and is a CIP of 08/438,159 05/08/1995 PAT 5,850,481
and said 09/292,569 04/15/1999
claims benefit of 60/082,228 04/16/1998
and said 08/649,419 05/16/1996
is a CIP of 08/508,083 07/27/1995 PAT 5,841,978
which is a CIP of 08/436,098 05/08/1995 PAT 5,636,292
and is a CIP of 08/436,099 05/08/1995 PAT 5,710,834
and is a CIP of 08/436,134 05/08/1995 PAT 5,748,763
and is a CIP of 08/438,159 05/08/1995 PAT 5,850,481
and is a CIP of 08/215,289 03/17/1994 ABN
and is a CIP of 08/327,426 10/21/1994 PAT 5,768,426
which is a CIP of 08/154,866 11/18/1993 ABN

Foreign Applications

UNITED STATES PATENT AND TRADEMARK OFFICE

Commissioner for Patents
United States Patent and Trademark Office
P.O. Box 1450
Alexandria, VA 22313-1450
www.uspto.gov

GARVEY SMITH NEHRBASS & DOODY
THREE LAKEWAY CENTER
3838 NORTH CAUSEWAY BLVD
SUITE 3290
METAIRIE, LA 70002

COPY MAILED

FEB 1 8 2005

OFFICE OF PETITIONS

In re Application of	:	
Daniel S. Sinclair Jr.	:	
Application No. 10/857,269	:	DECISION GRANTING PETITION
Filed: May 28, 2004	:	UNDER 37 CFR 1.137(b)
Attorney Docket No. P02037US	:	
(98541.2P3)	:	

This is a decision on the petition, filed February 10, 2005, which is being treated as a petition under 37 CFR 1.137(b) to revive the instant nonprovisional application for failure to timely notify the U.S. Patent and Trademark (USPTO) of the filing of an application in a foreign country, or under a multinational treaty that requires publication of applications eighteen months after filing. *See* 37 CFR 1.137(f).

The petition is **GRANTED**.

Petitioner states that the instant nonprovisional application is the subject of an application filed in an eighteen month publication country on August 4, 2004. However, the USPTO was unintentionally not notified of this filing within 45 days subsequent to the filing of the subject application in an eighteen month publication country.

In view of the above, this application became abandoned pursuant to 35 U.S.C. § 122(b)(2)(B)(iii) and 37 CFR 1.213(c) for failure to timely notify the Office of the filing of an application in a foreign country or under a multilateral international agreement that requires publication of applications 18 months after filing.

A petition to revive an application abandoned pursuant to 35 U.S.C. 122(b)(2)(B)(iii) for failure to notify the USPTO of a foreign filing must be accompanied by:

(1) the required reply which is met by the notification of such filing in a foreign country or under a multinational treaty;

(2) the petition fee as set forth in 37 CFR 1.17(m); and
(3) a statement that the entire delay in filing the required reply from the due date of the reply until the filing of a grantable petition was unintentional.

The instant petition has been found to be in compliance with 37 CFR 1.137(b). Accordingly, the failure to timely notify the USPTO of a foreign or international filing within 45 days after the date of filing of such foreign or international application as provided by 35 U.S.C. § 122(b)(2)(B)(iii) and 37 CFR 1.213(c) is accepted as having been unintentionally delayed.

The previous Request and Certification under 35 U.S.C. § 122(b)(2)(B)(i) has been previously rescinded.

After this decision is mailed, deposit account No. 50-0694 will be $750.00 for the petition fee.

Any inquiries concerning this decision may be directed to the undersigned at (571) 272-3220.

This matter is being referred to Technology Center Art Unit 1731 for examination in due course.

Wan Layton
Petitions Examiner
Office of Petitions
Office of the Deputy Commissioner
for Patent Examination Policy

UNITED STATES PATENT AND TRADEMARK OFFICE

Commissioner for Patents
United States Patent and Trademark Office
P.O. Box 1450
Alexandria, VA 22313-1450
www.uspto.gov

CARR & FERRELL LLP
2200 GENG ROAD
PALO ALTO, CA 94303

COPY MAILED

DEC 0 7 2005

OFFICE OF PETITIONS

In re Application of
Zhou Hong and Chih-Hong Fu
Application No. 10/857,273
Filed: May 28, 2004
For: DYNAMIC ALLOCATION OF TEXTURE CACHE MEMORY

DECISION ON PETITION

This is in response to the "Petition Under 37 CFR 1.47(b)," filed November 14, 2005, which has been treated as a petition under 37 CFR 1.183, to allow the assignee to sign a required supplemental declaration.[1]

The petition is dismissed.

Petitioner is given TWO MONTHS from the mailing date of this decision to respond, correcting the below-noted deficiencies. Any response should be entitled "Request for Reconsideration of Petition Under 37 CFR 1.183." Failure to respond will result in abandonment of the application. Any extensions of time will be governed by 37 CFR 1.136(a).

Petitioner has failed to show or provide proof that S3 Graphics Co., Ltd., ("S3") has sufficient proprietary interest in the above-identified application. Acceptable proof would include a copy of the employment agreement between the non-signing inventors and S3, a copy of an assignment agreement showing that the invention disclosed in the application is assigned to S3, or a legal memorandum signed by an attorney familiar with the law of the jurisdiction stating that a court of competent jurisdiction would by the weight of authority in that jurisdiction award the title of the invention to S3.

The $400.00 petition fee required by 37 CFR 1.17(f) for a petition under 37 CFR 1.183 has been charged to deposit account no. 06-0600.

[1] MPEP 603 states, "When an inventor who executed the original declaration is refusing or cannot be found to execute a required supplemental declaration, the requirement for that inventor to sign the supplemental declaration may be suspended or waived in accordance with 37 CFR 1.183. All available joint inventor(s) must sign the supplemental declaration on behalf of themselves, if appropriate, and on behalf of the nonsigning inventor. See MPEP § 409.03(a). If there are no joint inventor(s), then the party with sufficient proprietary interest must sign the supplemental declaration on behalf of the nonsigning inventor. See MPEP § 409.03(b).

Further correspondence with respect to this matter should be addressed as follows:

By mail: Mail Stop Petition
Commissioner for Patents
Box 1450
Alexandria, VA 22313

By FAX: (703) 872-9306
Attn: Office of Petitions

By hand: Customer Service Window
Randolph Building
401 Dulany Street
Alexandria, VA 22314

Telephone inquiries regarding this communication should be directed to the undersigned at (571) 272-3228.

Edward J. Tannouse
Petitions Attorney
Office of Petitions
Office of the Deputy Commissioner
for Patent Examination Policy

UNITED STATES PATENT AND TRADEMARK OFFICE

Commissioner for Patents
United States Patent and Trademark Office
P.O. Box 1450
Alexandria, VA 22313-1450
www.uspto.gov

CARR & FERRELL LLP
2200 GENG ROAD
PALO ALTO, CA 94303

COPY MAILED
APR 19 2006
OFFICE OF PETITIONS

In re Application of Zhou Hong and Chih-Hong Fu Application No. 10/857,273 Filed: May 28, 2004 For: DYNAMIC ALLOCATION OF TEXTURE CACHE MEMORY	: : : : : :	DECISION GRANTING PETITION UNDER 37 CFR 1.183

This is in response to the "Request For Reconsideration of Petition Under 37 CFR 1.183," filed February 7, 2006.[1]

The petition is **granted**.

Petitioner has shown that the inventors cannot be found or reached to sign the supplemental declaration. The requirement for the inventor to sign the supplemental declaration is hereby suspended or waived in accordance with 37 CFR 1.183.

The file is being forwarded to Technology Center 2600 for further examination *in due course*.

Telephone inquiries regarding this decision should be directed to the undersigned at (571) 272-3228.

Edward J. Tannouse
Petitions Attorney
Office of Petitions
Office of the Deputy Commissioner
for Patent Examination Policy

[1] A petition under 37 CFR 1.47 is only appropriate on the submission of the original oath or declaration. "When an inventor who executed the original declaration is refusing or cannot be found to execute a required supplemental declaration, the requirement for that inventor to sign the supplemental declaration may be suspended or waived in accordance with 37 CFR 1.183. All available joint inventor(s) must sign the supplemental declaration on behalf of themselves, if appropriate, and on behalf of the nonsigning inventor. See MPEP § 409.03(a)." See MPEP 603.

UNITED STATES PATENT AND TRADEMARK OFFICE

Commissioner for Patents
United States Patent and Trademark Office
P.O. Box 1450
Alexandria, VA 22313-1450
www.uspto.gov

HOWARD J. GREENWALD P.C.
70 LINDEN OAKS, THIRD FLOOR
ROCHESTER, NY 14625

COPY MAILED
SEP 25 2008

In re Application of Tuszynski et al. Application No. 10/857,279 Filed: May 28, 2004 Attorney Docket No. JT - 684	: : : : : :	DECISION ON PETITION TO WITHDRAW FROM RECORD

This is a decision on the Request to Withdraw as attorney or agent of record under 37 C.F.R. § 1.36(b), filed September 30, 2005.

The request is **MOOT**.

A review of the file record indicates that the power of attorney to HOWARD J. GREENWALD P.C. has been revoked by the assignee of the patent application on December 5, 2005. Accordingly, the request to withdraw under 37 C.F.R. § 1.36(b) is moot.

All future communications from the Office will continue to be directed to the correspondence address of record until otherwise notified by applicant.

Telephone inquires concerning this decision should be directed to the undersigned at 571-272-4914.

Ramesh Krishnamurthy
Petitions Examiner
Office of Petitions

UNITED STATES PATENT AND TRADEMARK OFFICE

Commissioner for Patents
United States Patent and Trademark Office
P.O. Box 1450
Alexandria, VA 22313-1450
www.uspto.gov

COPY MAILED
AUG 2 1 2008

MERCHANT & GOULD, PC
P.O. BOX 2903
MINNEAPOLIS, MN 55402-0903

In re Application of
Wen-Chien David Hsiao, et. al.
Application No. 10/857,286
Filed: May 28, 2004
Attorney Docket No.
15872.0071US01/HSJ9200302

: DECISION ON PETITION

This is a decision on the petition under the unintentional provisions of 37 CFR 1.137(b), filed July 17, 2008, to revive the above-identified application.

The petition is **GRANTED**.

The application became abandoned for failure to timely file a reply within the meaning of 37 CFR 1.113 to the Final Rejection of November 20, 2007. The proposed reply required for consideration of a petition to revive must be a Notice of Appeal (and appeal fee required by 37 CFR 41.20(b)(2), an amendment that *prima facie* places the application in condition for allowance, a Request for Continued Examination and submission (37 CFR 1.114), or the filing of a continuing application under 37 CFR 1.53(b). See MPEP 711.03(c)(III)(A)(2). No extensions of time pursuant to the provisions of 37 CFR 1.136(a) were obtained. Accordingly, the date of abandonment of this application is February 21, 2008.

The petition satisfies the requirements of 37 CFR 1.137(b) in that petitioner has supplied (1) the reply in the form of a Request for Continued Examination (RCE) and fee of $810, and the submission required by 37 CFR 1.114; (2) the petition fee of $1540; and (3) a proper statement of unintentional delay.

As requested, the Request for Continued Examination (RCE) fee will be charged to petitioner's deposit account.

In additional to receiving a Petition for Revival of an Application for Patent Abandoned Unintentionally Under 37CFR 1.137(b), the United States Patent and Trademark Office received a payment of $1050 for a three month extension of time on July 17, 2008.

An extension of time under 37 CFR 1.136 must be filed prior to the expiration of the maximum extendable period for reply. *See* In re Application of S., 8 USPQ2d 1630, 1631 (Comm'r Pats. 1988). Since the $1050 extension of time fee was subsequent to the maximum extendable period for reply, this fee is unnecessary and will be credited to the petitioner's credit card.

Telephone inquiries concerning this decision should be directed to Denise Williams at (571) 272-8930.

This application is being referred to Technology Center AU 2627 for processing of the RCE and for appropriate action by the Examiner in the normal course of business on the amendment submitted in accordance with 37 CFR 1.114.

Andrea Smith
Petitions Examiner
Office of Petitions

UNITED STATES PATENT AND TRADEMARK OFFICE

Commissioner for Patents
United States Patent and Trademark Office
P.O. Box 1450
Alexandria, VA 22313-1450
www.uspto.gov

DAVID I. ROCHE
BAKER & MCKENZIE LLP
130 EAST RANDOLPH DRIVE
CHICAGO, IL 60601

COPY MAILED

OCT 06 2008

OFFICE OF PETITIONS

In re Patent No. 7,379,135
Application No. 10/857,292
Filed: May 28, 2004
Issued: May 27, 2008
Attorney Docket No. AUO-111-US

ON PETITION

This is a decision on the petition filed June 10, 2008, which is being treated as a request under 37 CFR 3.81(b)[1] to add the name of the second assignee on the front page of the above-identified patent by way of a Certificate of Correction.

The request is **GRANTED**.

This matter is being referred to the Certificates of Correction Branch for issuance of the requested Certificate of Correction.

Telephone inquiries concerning this decision may be directed to Joan Olszewski at (571) 272-7751. Inquiries regarding the issuance of a certificate of correction should be directed to the Certificate of Correction Branch at (571) 272-4200.

/Liana Walsh/
Liana Walsh
Petitions Examiner
Office of Petitions

[1] *See* MPEP 1309, subsection II; and Official Gazette of June 22, 2004.

UNITED STATES PATENT AND TRADEMARK OFFICE

UNITED STATES DEPARTMENT OF COMMERCE
United States Patent and Trademark Office
Address: COMMISSIONER FOR PATENTS
P.O. Box 1450
Alexandria, Virginia 22313-1450
www.uspto.gov

CANTOR COLBURN, LLP
20 Church Street
22nd Floor
Hartford, CT 06103

Mail Date: 04/20/2010

Applicant	: Ji-Suk Lim	: DECISION ON REQUEST FOR
Patent Number	: 7576706	: RECALCULATION of PATENT
Issue Date	: 08/18/2009	: TERM ADJUSTMENT IN VIEW
Appliction No	: 10/857,302	: OF WYETH AND NOTICE OF INTENT TO
Filed	: 05/28/2004	: ISSUE CERTIFICATE OF CORRECTION
		:

The Request for Recalculation is **GRANTED** to the extent indicated.

The patent term adjustment has been determined to be **1102** days. The USPTO will *sua sponte* issue a certificate of correction reflecting the amount of PTA days determined by the recalculation.

Prior to the issuance of the certificate of correction, the USPTO will afford patentee an opportunity to be heard and request reconsideration. Accordingly, patentee has **one month or thirty (30) days**, whichever is longer, to file a request for reconsideration of this patent term adjustment calculation. See 35 U.S.C. 154(b)(3)(B)(ii) and 37 CFR 1.322(a)(4). No extensions of time will be granted under 37 CFR 1.136.

Patentee should use document code PET.OP if electronically filing a request for reconsideration of this patent term adjustment calculation. The patentee must also include the information required by 37 CFR 1.705(b)(2) and the fee required by 37 CFR 1.18(e). If patentee does not file a timely request for reconsideration of this patent term adjustment calculation including the information required by 37 CFR 1.705(b)(2) and the fee required by 37 CFR 1.18(e), the USPTO will issue a certificate of correction reflecting the PTA determination noted above.

Patentee should be aware that in order to preserve the right to review in the United States District Court for the District of Columbia of the USPTO patent term adjustment determination, patentee must ensure that he or she also take the steps required under 35 U.S.C. 154(b)(4)(A) in a timely manner. Nothing in the request for recalculation should be construed as providing an alternative time frame for commencing a civil action under 35 U.S.C. 154(b)(4)(A).

Any questions concerning this decision should be directed to the Office of Patent Legal Administration at 571-272-7702.

UNITED STATES PATENT AND TRADEMARK OFFICE

COMMISSIONER FOR PATENTS
UNITED STATES PATENT AND TRADEMARK OFFICE
P.O. BOX 1450
ALEXANDRIA, VA 22313-1450
www.uspto.gov

Mark G. Bocchetti
Patent Legal Staff
Eastman Kodak Company
343 State Street
Rochester NY 14650-2201

MAILED

MAY 12 2009

OFFICE OF PETITIONS

In re Application of
Molaire, et al.
Application No. 10/857,307
Filed: May 28, 2004
Attorney Docket No. 81779LPK

DECISION ON PETITION

This is a decision on the petition under the unintentional provisions of 37 CFR 1.137(b), filed March 16, 2009, to revive the above-identified application.

The petition is **GRANTED**.

This application became abandoned July 5, 2008 for failure to timely pay the issue and publication fees, as required by the Notice of Allowance and Fee(s) Due, mailed April 4, 2008. Notice of Abandonment was mailed July 30, 2008.

The petition satisfies the requirements of 37 CFR 1.137(b) in that petitioner has supplied (1) the required reply in the form of payment of the issue fee and the publication fee, (2) the required petition fee; and (3) a proper statement of unintentional delay.

Telephone inquiries concerning this decision should be directed to the undersigned at (571) 272-3205.

This application is being referred to Office of Data Management for processing into a patent.

/ALESIA M. BROWN/

Alesia M. Brown
Petitions Attorney
Office of Petitions

UNITED STATES PATENT AND TRADEMARK OFFICE

Commissioner for Patents
United States Patent and Trademark Office
P.O. Box 1450
Alexandria, VA 22313-1450
www.uspto.gov

Paper No.

ERICSSON INC.
6300 LEGACY DRIVE
M/S EVR 1-C-11
PLANO TX 75024

MAILED

MAY 04 2009

OFFICE OF PETITIONS

In re Application of	:	
Kumar Balachandran et al.	:	
Application No. 10/857,320	:	DECISION ON PETITION
Filed: May 27, 2004	:	PURSUANT TO
Attorney Docket No.: P18722-US2	:	37 C.F.R. § 1.137(B)
Title: MOBILE-TERMINAL GATEWAY	:	

This is a decision on the petition pursuant to 37 C.F.R. § 1.137(b), filed September 18, 2008, to revive the above-identified application.

This petition pursuant to 37 C.F.R. § 1.137(b) is **GRANTED**.

The above-identified application became abandoned for failure to reply in a timely manner to the non-final Office action, mailed February 22, 2008, which set a shortened statutory period for reply of three months. No response was received, and no extensions of time under the provisions of 37 C.F.R. § 1.136(a) were requested. Accordingly, the above-identified application became abandoned on May 23, 2008. A notice of abandonment was mailed on August 27, 2008.

A grantable petition pursuant to 37 C.F.R. § 1.137(b) must be accompanied by:

(1) The reply required to the outstanding Office action or notice, unless previously filed;
(2) The petition fee as set forth in 37 C.F.R. § 1.17(m);
(3) A statement that the entire delay in filing the required reply from the due date for the reply until the filing of a grantable petition pursuant to this paragraph was unintentional. The Commissioner may require additional information where there is a question whether the delay was unintentional, and;
(4) Any terminal disclaimer (and fee as set forth in 37 C.F.R. § 1.20(d)) required pursuant to paragraph (d) of this section.

With this petition, Petitioner has submitted the petition fee, an amendment, and the proper statement of unintentional delay. A terminal disclaimer is not required. As such, the first three requirements of Rule 1.137(b) have been met. The fourth requirement of Rule 1.137(b) is not applicable, as a terminal disclaimer is not required.[1]

The Technology Center will be notified of this decision. The Technology Center's support staff will notify the Examiner of this decision, so that the amendment that was received on September 18, 2008 can be processed.

Petitioner may find it beneficial to view Private PAIR within a fortnight of the present decision to ensure that the revival has been acknowledged by the Technology Center in response to this decision. It is noted that all inquiries with regard to any failure of that change in status should be directed to the Technology Center where that change of status must be effected - **the Office of Petitions cannot effectuate a change of status**.

Telephone inquiries regarding *this decision* should be directed to the undersigned at (571) 272-3225.[2] All other inquiries

---

1 See Rule 1.137(d).
2 Petitioner will note that all practice before the Office should be in writing, and the action of the Office will be based exclusively on the written record in the Office. See 37 C.F.R. § 1.2. As such, Petitioner is reminded that no telephone discussion may be controlling or considered authority for Petitioner's further action(s).

concerning examination procedures or status of the application should be directed to the Technology Center.

/Paul Shanoski/
Paul Shanoski
Senior Attorney
Office of Petitions

UNITED STATES PATENT AND TRADEMARK OFFICE

COMMISSIONER FOR PATENTS
UNITED STATES PATENT AND TRADEMARK OFFICE
P.O. BOX 1450
ALEXANDRIA, VA 22313-1450
www.uspto.gov

DORSEY & WHITNEY LLP
Suite 3400
Four Embarcadero Center
San Francisco, CA 94111-4187

COPY MAILED
OCT 2 6 2004
OFFICE OF PETITIONS

In re Application of	:	
Ternansky, et al.	:	
Filed: May 27, 2004	:	ON PETITION
Application No. 10/857,321	:	
Atty. Dkt. No.: 34435/US/2	:	

This decision is in response to the "PETITION TO ACCORD A FILING DATE UNDER 37 CFR § 1.53 (e)" filed October 1, 2004 in response to the "Notice of Incomplete Nonprovisional Application ("Notice") mailed July 29, 2004 to accord the above-identified application a filing date of May 27, 2004.

The application was filed May 27, 2004. The Notice mailed indicated that the application had not been accorded a filing date because the application appeared to have been deposited without drawings as required by 35 USC 113.

In response, the present petition was filed wherein petitioners argue that the application as deposited included one sheet of informal drawings. Petitioners have included as proof of mailing and proof of receipt of one sheet of formal drawings a return postcard date stamped by the Office on May 27, 2004. A copy of the one sheet of informal drawings purportedly filed with the application on May 27, 2004 was also supplied.

The original drawing sheet submitted with the application papers has not been located. However, in view of the evidence presented, the petition to accord the application a filing date of May 27, 2004 is GRANTED.

Since the original drawing sheet cannot be located in the Office, the copy supplied with the instant petition will be used for examination purposes.

No petition fee is due in connection with this matter. A refund to deposit account No. 50-2319 has been requested from the Finance Office, Refund Section.

This application will be returned to the Office of Initial Patent Examination for further processing with a filing date of May 27, 2004.

Telephone inquiries related to this decision may be directed to the undersigned at (571) 272-3205.

Alesia M. Brown
Senior Petitions Attorney
Office of Petitions

UNITED STATES PATENT AND TRADEMARK OFFICE

Commissioner for Patents
United States Patent and Trademark Office
P.O. Box 1450
Alexandria, VA22313-1450
www.uspto.gov

JONES DAY
222 EAST 41ST STREET
NEW YORK NY 10017

COPY MAILED

JAN 0 3 2008

OFFICE OF PETITIONS

In re Application of
Robert J. Ternansky et al.
Application No. 10/857,321
Filed: May 27, 2004
Attorney Docket No. 9715-026-999

: DECISION ON PETITION
: UNDER 37 CFR 1.78(a)(6)
:
:

This is a decision on the petition under 37 CFR §§ 1.78(a)(6), filed March 28, 2006, to accept an unintentionally delayed claim under 35 U.S.C. § 119(e) for the benefit of prior-filed provisional application 60/473,937 filed May 27, 2003 and set forth in the concurrently filed Supplemental Application Data Sheet.[1]

The petition is **DISMISSED AS MOOT**.

The petition is accompanied by a Supplemental Application Data Sheet. While a reference to the prior-filed provisional application was not included in an Application Data Sheet (ADS), in the declaration, or in the first sentence of the specification following the title as required by the rules, a reference, nevertheless, was made in the application transmittal filed with the application on May 27, 2004.

Where a claim for priority under 37 CFR § 1.78(a)(6) is not included in the first sentence of the specification or in an ADS but does appear either in the oath or declaration or a transmittal letter filed with the application and the Office notes the claim for priority, no petition will be required to accept a late claim for priority. This is because the application would have been scheduled for publication on the basis of the information concerning the claim submitted elsewhere in the application within the time period set forth in 37 CFR § 1.78(a)(5)(ii). On the other hand, if the USPTO does not note the claim for priority to the prior-filed applications set forth in the oath or declaration or transmittal letter submitted with the application, a petition will be required to accept a late claim for priority under 37 CFR § 1.78(a)(6).[2] In the present case, the Office noted the claim for priority to the prior-filed provisional application in the

---

[1] It is noted that the provisional application was filed on May 27, 2003 and the instant application was timely filed ay 27, 2004. See 37 CFR 1.7(b).

[2] *Note* MPEP 201.11 (III)(D) and 66 Federal Register 67087 at 67089 (Dec. 28, 2001), effective December 28, 2001.

transmittal letter filed with the application, as shown by their inclusion on the filing receipt.

In view of the above, the $1370 petition fee submitted is unnecessary and will be refunded to petitioner's deposit account in due course.

Additionally, while no petition is required, a Supplemental Application Data Sheet (signed in compliance with 37 CFR 1.33(b) and in compliance with 37 CFR 1.76) or a Substitute Amendment (complying with the provisions of 37 CFR 1.121 and in compliance with 37 CFR 1.78(a)(5)(i)) is still required.

Any questions concerning this decision on petition may be directed to Senior Petitions Attorney Patricia Faison-Ball at (571) 272-3212. All other inquiries concerning either the examination procedures or status of the application should be directed the Technology Center.

This matter is being referred to Technology Center Art Unit 1621 for appropriate action, pending the filing of the Supplemental Application Data Sheet or Substitute Amendment for consideration by the examiner of applicant's entitlement to claim benefit of priority under 35 U.S.C. § 119(e) to the prior-filed provisional application.

Anthony Knight
Supervisor
Office of Petitions

UNITED STATES PATENT AND TRADEMARK OFFICE

Commissioner for Patents
United States Patent and Trademark Office
P.O. Box 1450
Alexandria, VA 22313-1450
www.uspto.gov

PATENT ADMINISTRATOR
KATTEN MUCHIN ROSENMAN LLP
1025 THOMAS JEFFERSON STREET, N.W.
EAST LOBBY: SUITE 700
WASHINGTON DC 20007-5201

COPY MAILED

FEB 23 2007

OFFICE OF PETITIONS

In re Application of	:	
Carl J. COOPER	:	
Application No. 10/857,341	:	ON PETITION
Filed: June 1, 2004	:	
Attorney Docket No. 330280.00003	:	

This is in response to the petition under 37 CFR 1.59(b), filed September 6, 2006, to expunge information submitted under MPEP 724.05(III).

The petition is **DISMISSED.**

Petitioner requests that the document entitled "Rebuttal Report of Richard Kupnicki for Defendant Gennum Corporation (undated)" (hereinafter "Report") submitted in an Information Disclosure Document on June 1, 2004 be expunged as it is confidential under a protective order issued by the United States District Court for the Northern District of California. The Report is described as having the words "Confidential" and "Attorney's Eyes Only" appearing on the bottom of the last page (i.e., page 46) of the document in small type below the signature block.

A thorough review of the application file indicates that the Report was listed on the PTO-1449 filed June 1, 2004; however, no copy of the Report or any other document having 46 pages with the words "Confidential" and "Attorney's Eyes Only" appearing on the bottom of the last page (i.e., page 46) of the document in small type below the signature block can be found as having been filed on June 1, 2004.

Should petitioner become aware that the document has been matched with the application file a renewed petition to expunge should be timely submitted.

Telephone inquiries regarding this decision should be directed to David Bucci at (571) 272-7099.

Brian Hearn
Petitions Examiner
Office of Petitions

UNITED STATES PATENT AND TRADEMARK OFFICE

UNITED STATES DEPARTMENT OF COMMERCE
United States Patent and Trademark Office
Address: COMMISSIONER FOR PATENTS
P.O. Box 1450
Alexandria, Virginia 22313-1450
www.uspto.gov

SHUMAKER & SIEFFERT, P. A.
1625 RADIO DRIVE
SUITE 300
WOODBURY, MN 55125

Mail Date: 04/20/2010

Applicant	: Duane M. Butler	: DECISION ON REQUEST FOR
Patent Number	: 7586920	: RECALCULATION of PATENT
Issue Date	: 09/08/2009	: TERM ADJUSTMENT IN VIEW
Appliction No	: 10/857,349	: OF WYETH AND NOTICE OF INTENT TO
Filed	: 05/28/2004	: ISSUE CERTIFICATE OF CORRECTION
		:

The Request for Recalculation is **GRANTED** to the extent indicated.

The patent term adjustment has been determined to be **1473** days. The USPTO will *sua sponte* issue a certificate of correction reflecting the amount of PTA days determined by the recalculation.

Prior to the issuance of the certificate of correction, the USPTO will afford patentee an opportunity to be heard and request reconsideration. Accordingly, patentee has **one month or thirty (30) days**, whichever is longer, to file a request for reconsideration of this patent term adjustment calculation. See 35 U.S.C. 154(b)(3)(B)(ii) and 37 CFR 1.322(a)(4). No extensions of time will be granted under 37 CFR 1.136.

Patentee should use document code PET.OP if electronically filing a request for reconsideration of this patent term adjustment calculation. The patentee must also include the information required by 37 CFR 1.705(b)(2) and the fee required by 37 CFR 1.18(e). If patentee does not file a timely request for reconsideration of this patent term adjustment calculation including the information required by 37 CFR 1.705(b)(2) and the fee required by 37 CFR 1.18(e), the USPTO will issue a certificate of correction reflecting the PTA determination noted above.

Patentee should be aware that in order to preserve the right to review in the United States District Court for the District of Columbia of the USPTO patent term adjustment determination, patentee must ensure that he or she also take the steps required under 35 U.S.C. 154(b)(4)(A) in a timely manner. Nothing in the request for recalculation should be construed as providing an alternative time frame for commencing a civil action under 35 U.S.C. 154(b)(4)(A).

Any questions concerning this decision should be directed to the Office of Patent Legal Administration at 571-272-7702.

UNITED STATES PATENT AND TRADEMARK OFFICE

Commissioner for Patents
United States Patent and Trademark Office
P.O. Box 1450
Alexandria, VA 22313-1450
www.uspto.gov

Merchant & Gould PC
P.O. Box 2903
Minneapolis, MN 55402-0903

COPY MAILED

JAN 07 2009

OFFICE OF PETITIONS

In re Application of
Savas Gider et al.
Application No. 10/857,363
Filed: May 28, 2004
Attorney Docket No.
15872.0070US01/HITG.070PA

DECISION ON PETITION

This is a decision on the petition under the unintentional provisions of 37 CFR 1.137(b), filed October 28, 2008, to revive the above-identified application.

The petition is **GRANTED**.

The application became abandoned as a result of petitioner's failure to file an appeal brief (and fee required by 37 CFR 41.20(b)(2)) within the time period provided in 37 CFR 41.37(a)(1). As an appeal brief (and appeal brief fee) was not filed within two (2) months of the Notice of Appeal filed September 17, 2007, and no extensions of time under the provisions of 37 CFR 1.136(a) were obtained, the appeal was dismissed and the proceedings as to the rejected claims were terminated. See 37 CFR 41.37(b). As no claim was allowed, the application became abandoned on November 18, 2007. See MPEP 1215.04. A Notice of Abandonment was mailed on July 28, 2008.

The petition satisfies the requirements of 37 CFR 1.137(b) in that petitioner has supplied (1) the reply in the form of an Appeal Brief, with the required fee of $540, (2) the petition fee of $1620, and (3) a proper statement of unintentional delay. Accordingly the Appeal brief is accepted as being unintentionally delayed.

37 CFR 1.137(b)(3) requires a statement that the entire delay in filing the required reply from the due date for the reply until the filing of a grantable petition pursuant to 37 CFR 1.137(b) was unintentional. Since the statement contained in the petition varies from the language required by 37 CFR 1.137(b)(3), the statement contained in the petition is being construed as the statement

required by 37 CFR 1.137(b)(3). Petitioner must notify the Office if this is **not** a correct interpretation of the statement contained in the petition.

Telephone inquiries concerning this decision should be directed to Kimberly Inabinet at (571) 272-4618.

This application is being referred to the Technology Center AU 2627 for appropriate action in the normal course of business for processing of the Appeal Brief received October 28, 2008.

Carl Friedman
Petitions Examiner
Office of Petitions

UNITED STATES PATENT AND TRADEMARK OFFICE

Commissioner for Patents
United States Patent and Trademark Office
P.O. Box 1450
Alexandria, VA 22313-1450
www.uspto.gov

NASA/Marshall Space Flight Center
LSO1/Office of Chief Counsel
MSFC, AL 35812

COPY MAILED

NOV 1 4 2005

OFFICE OF PETITIONS

In re Application of	:	
Thomas K. DeLay, et al.	:	
Application No. 10/857,379	:	DECISION ON PETITION
Filed: May 20, 2004	:	UNDER 37 CFR 1.137(b)
Attorney Docket No. MFS-31838-1	:	

This is a decision on the petition, filed August 4, 2005, which is being treated as a petition under 37 CFR 1.137(b) to revive the instant nonprovisional application for failure to timely notify the U.S. Patent and Trademark (USPTO) of the filing of an application in a foreign country, or under a multinational treaty that requires publication of applications eighteen months after filing. *See* 37 CFR 1.137(f).

The petition is **GRANTED**.

Petitioner states that the instant nonprovisional application is the subject of an application filed in an eighteen-month publication country on May 20, 2005. However, the USPTO was unintentionally not notified of this filing within 45 days subsequent to the filing of the subject application in an eighteen-month publication country.

In view of the above, this application became abandoned pursuant to 35 U.S.C. § 122(b)(2)(B)(iii) and 37 CFR 1.213(c) for failure to timely notify the Office of the filing of an application in a foreign country or under a multilateral international agreement that requires publication of applications 18 months after filing.

A petition to revive an application abandoned pursuant to 35 U.S.C. 122(b)(2)(B)(iii) for failure to notify the USPTO of a foreign filing must be accompanied by:

(1) the required reply which is met by the notification of such filing in a foreign country or under a multinational treaty;
(2) the petition fee as set forth in 37 CFR 1.17(m); and
(3) a statement that the entire delay in filing the required reply from the due date of the reply until the filing of a grantable petition was unintentional.

The instant petition has been found to be in compliance with 37 CFR 1.137(b). Accordingly, the failure to timely notify the USPTO of a foreign or international filing within 45 days after the date of filing of such foreign or international application as provided by 35 U.S.C. § 122(b)(2)(B)(iii) and 37 CFR 1.213(c) is accepted as having been unintentionally delayed.

The previous Request and Certification under 35 U.S.C. § 122(b)(2)(B)(i) has been rescinded. A Notice Regarding Rescission of Nonpublication Request, which set forth the projected publication date of November 24, 2005 was mailed to applicant on August 12, 2005.

Telephone inquiries concerning this decision should be directed to the undersigned at (571) 272-3223.

This application is being referred to Technology Center Art Unit 3700 for examination in due course.

Marianne E. Jenkins

Marianne E. Jenkins
Petitions Examiner
Office of Petitions

UNITED STATES PATENT AND TRADEMARK OFFICE

Commissioner for Patents
United States Patent and Trademark Office
P.O. Box 1450
Alexandria, VA 22313-1450
www.uspto.gov

VISTA IP LAW GROUP, LLP
2040 MAIN STREET
9TH FLOOR
IRVINE CA 92614

COPY MAILED
OCT 01 2008

In re Application of	:	
Todd K. Whitehurst, et al.	:	
Application No. 10/857,390	:	DECISION ON PETITION
Filed: May 28, 2008	:	TO WITHDRAW
Attorney Docket No. 05-00590-02	:	FROM RECORD
	:	

This is a decision on the Request to Withdraw as attorney or agent of record under 37 C.F.R. § 1.36(b), filed February 14, 2008

The request is **NOT APPROVED**.

A grantable request to withdraw as attorney/agent of record must be signed by every attorney/agent seeking to withdraw or contain a clear indication that one attorney is signing on behalf of another/others. A request to withdraw will not be approved unless at least 30 (thirty) days would remain between the date of approval and the later of the expiration date of a time to file a response or the expiration date of the maximum time period which can be extended under 37 C.F.R. § 1.136(a).

The Office cannot approve the request at this time since the reasons provided do not meet any of the conditions under the mandatory or permissive categories enumerated in 37 CFR 10.40. Section 10.40 of Title 37 of the Code of Federal Regulation states, "[a] practitioner shall not withdraw from employment in a proceeding before the Office without permission from the Office[.]" More specifically, 37 CFR 10.40 states, "[i]f paragraph (b) of this section is not applicable, a practitioner may not request permission to withdraw in matter pending before the Office unless such request or such withdrawal is" for one the permissive reasons listed in 37 CFR 10.40(c). The reason set forth in the request, "ownership transfer", does not meet any of the conditions set forth in 37 CFR 10.40.

All future communications from the Office will continue to be directed to the above-listed address until otherwise notified by applicant.

Telephone inquiries concerning this decision should be directed to undersigned at 571-272-1642.

April M. Wise
Petitions Examiner
Office of Petitions

UNITED STATES PATENT AND TRADEMARK OFFICE

Commissioner for Patents
United States Patent and Trademark Office
P.O. Box 1450
Alexandria, VA 22313-1450
www.uspto.gov

MESCHKOW & GRESHAM, P.L.C.
5727 NORTH SEVENTH STREET, SUITE 409
PHOENIX, AZ 85014

COPY MAILED

FEB 05 2007

OFFICE OF PETITIONS

ON PETITION

In re Application of	:
Brian D. Swanson	:
Application No. 10/857,393	:
Filed: May 28, 2004	:
Attorney Docket No. SWAN-101	:

This is a decision on the petition, filed September 22, 2006, to Withdraw Holding of Abandonment.

The petition is **GRANTED**.

The petition states that a reply was timely submitted on July 3, 2006, (Certificate of Mailing date June 30, 2006). To support this assertion, the petitioner has submitted a copy of the postcard receipt showing a receipt stamp date of July 3, 2006, of the reply. Additionally, Office records do show that a reply was infact received on July 3, 2006 to include a three month extension of time.

In view of the above, the holding of abandonment is hereby vacated and the holding of abandonment withdrawn.

Telephone inquiries concerning this decision should be directed to the undersigned at (571) 272-3208.

This matter is being forwarded to Technology Center AU 3679, for consideration of the amendment submitted on July 3, 2006 and resubmitted with the instant petition on September 22, 2006.

Karen Creasy

Karen Creasy
Petitions Examiner
Office of Petitions

UNITED STATES PATENT AND TRADEMARK OFFICE

UNITED STATES DEPARTMENT OF COMMERCE
United States Patent and Trademark Office
Address: COMMISSIONER FOR PATENTS
P.O. Box 1450
Alexandria, Virginia 22313-1450
www.uspto.gov

BUCHANAN INTELLECTUAL PROPERTY OFFICE LLC
P.O. BOX 700
PERRYSBURG, OH 43552-0700

Mail Date: 04/21/2010

Applicant	: Jacob A. Flagle	: DECISION ON REQUEST FOR
Patent Number	: 7628804	: RECALCULATION of PATENT
Issue Date	: 12/08/2009	: TERM ADJUSTMENT IN VIEW
Appliction No	: 10/857,403	: OF WYETH AND NOTICE OF INTENT TO
Filed	: 05/28/2004	: ISSUE CERTIFICATE OF CORRECTION
		:

The Request for Recalculation is **GRANTED** to the extent indicated.

The patent term adjustment has been determined to be **1115** days. The USPTO will *sua sponte* issue a certificate of correction reflecting the amount of PTA days determined by the recalculation.

Prior to the issuance of the certificate of correction, the USPTO will afford patentee an opportunity to be heard and request reconsideration. Accordingly, patentee has **one month or thirty (30) days**, whichever is longer, to file a request for reconsideration of this patent term adjustment calculation. See 35 U.S.C. 154(b)(3)(B)(ii) and 37 CFR 1.322(a)(4). No extensions of time will be granted under 37 CFR 1.136.

Patentee should use document code PET.OP if electronically filing a request for reconsideration of this patent term adjustment calculation. The patentee must also include the information required by 37 CFR 1.705(b)(2) and the fee required by 37 CFR 1.18(e). If patentee does not file a timely request for reconsideration of this patent term adjustment calculation including the information required by 37 CFR 1.705(b)(2) and the fee required by 37 CFR 1.18(e), the USPTO will issue a certificate of correction reflecting the PTA determination noted above.

Patentee should be aware that in order to preserve the right to review in the United States District Court for the District of Columbia of the USPTO patent term adjustment determination, patentee must ensure that he or she also take the steps required under 35 U.S.C. 154(b)(4)(A) in a timely manner. Nothing in the request for recalculation should be construed as providing an alternative time frame for commencing a civil action under 35 U.S.C. 154(b)(4)(A).

Any questions concerning this decision should be directed to the Office of Patent Legal Administration at 571-272-7702.

UNITED STATES PATENT AND TRADEMARK OFFICE

UNITED STATES DEPARTMENT OF COMMERCE
United States Patent and Trademark Office
Address: COMMISSIONER FOR PATENTS
P.O. Box 1450
Alexandria, Virginia 22313-1450
www.uspto.gov

RIDOUT & MAYBEE LLP
225 KING STREET WEST
10TH FLOOR
TORONTO, ON M5V 3M2
CANADA

Mail Date: 04/21/2010

Applicant	: Neil P. Adams	: DECISION ON REQUEST FOR
Patent Number	: 7627120	: RECALCULATION of PATENT
Issue Date	: 12/01/2009	: TERM ADJUSTMENT IN VIEW
Appliction No	: 10/857,436	: OF WYETH AND NOTICE OF INTENT TO
Filed	: 06/01/2004	: ISSUE CERTIFICATE OF CORRECTION
		:

The Request for Recalculation is **GRANTED** to the extent indicated.

The patent term adjustment has been determined to be **1189** days. The USPTO will *sua sponte* issue a certificate of correction reflecting the amount of PTA days determined by the recalculation.

Prior to the issuance of the certificate of correction, the USPTO will afford patentee an opportunity to be heard and request reconsideration. Accordingly, patentee has **one month or thirty (30) days**, whichever is longer, to file a request for reconsideration of this patent term adjustment calculation. See 35 U.S.C. 154(b)(3)(B)(ii) and 37 CFR 1.322(a)(4). No extensions of time will be granted under 37 CFR 1.136.

Patentee should use document code PET.OP if electronically filing a request for reconsideration of this patent term adjustment calculation. The patentee must also include the information required by 37 CFR 1.705(b)(2) and the fee required by 37 CFR 1.18(e). If patentee does not file a timely request for reconsideration of this patent term adjustment calculation including the information required by 37 CFR 1.705(b)(2) and the fee required by 37 CFR 1.18(e), the USPTO will issue a certificate of correction reflecting the PTA determination noted above.

Patentee should be aware that in order to preserve the right to review in the United States District Court for the District of Columbia of the USPTO patent term adjustment determination, patentee must ensure that he or she also take the steps required under 35 U.S.C. 154(b)(4)(A) in a timely manner. Nothing in the request for recalculation should be construed as providing an alternative time frame for commencing a civil action under 35 U.S.C. 154(b)(4)(A).

Any questions concerning this decision should be directed to the Office of Patent Legal Administration at 571-272-7702.

UNITED STATES PATENT AND TRADEMARK OFFICE

Commissioner for Patents
United States Patent and Trademark Office
P.O. Box 1450
Alexandria, VA 22313-1450
www.uspto.gov

MORRISON & FOERSTER LLP
1650 TYSONS BOULEVARD
SUITE 400
MCLEAN, VA 22102

COPY MAILED
SEP 24 2008

In re Application of McCall et al. Application No. 10/857,447 Filed: June 1, 2004 Attorney Docket No. 544092001400	: : : : : :	DECISION ON PETITION TO WITHDRAW FROM RECORD

This is a decision on the Request to Withdraw as attorney or agent of record under 37 C.F.R. § 1.36(b), filed September 28, 2005.

The request is **MOOT**.

A review of the file record indicates that the power of attorney to MORRISON & FOERSTER LLP has been revoked by the assignee of the patent application on November 3, 2005. Accordingly, the request to withdraw under 37 C.F.R. § 1.36(b) is moot.

All future communications from the Office will continue to be directed to the correspondence address of record until otherwise notified by applicant.

Telephone inquires concerning this decision should be directed to the undersigned at 571-272-4914.

Ramesh Krishnamurthy

Ramesh Krishnamurthy
Petitions Examiner
Office of Petitions

UNITED STATES PATENT AND TRADEMARK OFFICE

Commissioner for Patents
United States Patent and Trademark Office
P.O. Box 1450
Alexandria, VA 22313-1450
www.uspto.gov

ROBERT J. MULCAHY
APPLIED MATERIALS, INC.
BOX 450A
SANTA CLARA, CA 95052

COPY MAILED

JUN 29 2007

OFFICE OF PETITIONS

In re Application of	:	
Peter Michael Banks	:	
Application No. 10/857,449	:	ON PETITION
Filed: June 1, 2004	:	
Attorney Docket No. 008777	:	

This is a decision on the petition under 37 CFR 1.137(b), filed February 12, 2007, to revive the above-identified application.

The petition is **GRANTED**.

The above-identified application became abandoned for failure to reply in a timely manner to the Office action mailed July 10, 2006, which set a shortened statutory period for reply of two (2) months or thirty (30) days (whichever is later). No extensions of time under the provisions of 37 CFR 1.136(a) were obtained. Accordingly, the above-identified application became abandoned on September 11, 2006.

Telephone inquiries concerning this decision should be directed to Irvin Dingle at (571) 272-3210.

This matter is being referred to Technology Center AU 2881 for further processing.

Irvin Dingle
Petitions Examiner
Office of Petitions

UNITED STATES PATENT AND TRADEMARK OFFICE

COMMISSIONER FOR PATENTS
UNITED STATES PATENT AND TRADEMARK OFFICE
P.O. BOX 1450
ALEXANDRIA, VA 22313-1450
www.uspto.gov

WILSON SONSINI GOODRICH & ROSATI
650 PAGE MILL ROAD
PALO ALTO CA 94304-1050

COPY MAILED

MAY 19 2009

OFFICE OF PETITIONS

In re Patent No. 7,425,553	:	
ATTARDO et al.	:	DECISION ON REQUEST FOR
Issue Date: September 16, 2008	:	RECONSIDERATION OF
Application No. 10/857,458	:	PATENT TERM ADJUSTMENT
Filed: May 28, 2004	:	AND NOTICE OF INTENT TO ISSUE
Atty Docket No. 35933-704-201	:	CERTIFICATE OF CORRECTION

This is in response to the "REQUEST FOR RECONSIDERATION OF PATENT TERM ADJUSTMENT UNDER 37 C.F.R. § 1.705(d)" filed October 27, 2008, requesting that the patent term adjustment determination for the above-identified patent be corrected from five-hundred four (504) days to eight hundred seventy-one (871) days.

The request for reconsideration of patent term adjustment is **GRANTED** to the extent indicated herein.

Patentees are given **THIRTY (30) DAYS or ONE (1) MONTH, whichever is longer**, from the mail date of this decision to respond. No extensions of time will be granted under 37 CFR 1.136.

On September 16, 2008, the above-identified application matured into Patent No. 7,425,553 with a patent term adjustment of 504 days. This request for reconsideration of patent term adjustment was timely filed within two months of the issue date of the patent. See 37 CFR 1.705(d).

Initially, patentees disclose that they should be assessed a period of delay of 11 days, pursuant to 37 CFR 1.704(c)(10), for the filing of a Request of Correction of Inventorship under 37 CFR 1.48(b) (Request) on June 19, 2008.

37 CFR 1.704(c)(10) provides:

> Submission of an amendment under § 1.312 or other paper after a notice of allowance has been given or mailed, in which case the period of adjustment set forth in § 1.703 shall be reduced by the lesser of:
>
> (i) The number of days, if any, beginning on the date the amendment under § 1.312 or other paper was filed and ending on the mailing date of the Office action or notice in response to the amendment under § 1.312 or such other paper;
>
> or
>
> (ii) Four months;

In this instance, it is undisputed that patentees filed the Request after the mailing of the notice of allowance. The Office responded to the Request on June 30, 2008. Thus, the period of adjustment should have been reduced by the lesser period of 12 days (not 11 days as suggested by patentees), beginning on the date the Request was filed, June 19, 2008, and ending on the mailing date of the Office action or notice in response to the Request, June 30, 2008. Accordingly, a period of reduction of 12 days will be entered.

Further, patentees request recalculation of the patent term adjustment based on the decision in Wyeth v. Dudas, 580 F. Supp. 2d 138, 88 U.S.P.Q. 2d 1538 (D.D.C. 2008). Patentee asserts that pursuant to Wyeth, a PTO delay under 35 U.S.C. 154(b)(1)(A) overlaps with a delay under 35 U.S.C. 154(b)(1)(B) only if the delays "occur on the same day." It appears that patentees are asserting that a portion of the period of adjustment due to the Three Year Delay by the Office, pursuant to 37 CFR 1.703(b), 378 of 477 days, does not overlap with the 636-day period of adjustment due to examination delay, pursuant to 37 CFR 1.702(a), as these periods do not occur on the same days.

The 477-day period is calculated based on the application having been filed under 35 U.S.C. 111(a) on May 28, 2004, and the patent having been issued on September 16, 2008, three years and 477 days later. Patentee asserts that in addition to this 477-day period, patentees are entitled to a period of adjustment due

to examination delay, pursuant to 37 CFR 1.702(a), totalling 636 days. This 636-day period is the sum of:

- a period of delay of 537 days for the failure by the Office to mail at least one of a notification under 35 U.S.C. 132 not later than fourteen months after the date on which the application was filed under 35 U.S.C. 111(a), pursuant to § 1.702(a)(1); and,
- a period of delay of 99 days for the failure by the Office to respond to a reply under 35 U.S.C. 132 not later than four months after the date on which the reply was filed, pursuant to § 1.702(a)(2).

A Restriction Requirement was mailed January 16, 2007, 14 months and 537 days after the application was filed on May 28, 2004. Additionally, the Office did not respond to the reply of July 26, 2007, until March 4, 2008, 4 months and 99 days after the date on which the reply was filed.

Under 37 CFR 1.703(f), patentees are entitled to a period of patent term adjustment equal to the period of delays based on the grounds set forth in 37 CFR 1.702 reduced by the period of time equal to the period of time during which patentees failed to engage in reasonable efforts to conclude prosecution pursuant to 37 CFR 1.704. In other words, patentees are entitled to the period of Office delay reduced by the period of applicant delay. Although patentees indicated that they should be assessed a total period of reduction of 143 days for applicant delay, the Office has determined that the period of reduction is 144 days for applicant delay.

Patentees do not dispute that the total period of Office delay is the sum of the period of Three Years Delay (477 days) and the period of Examination Delay (636 days) to the extent that these periods of delay are not overlapping. Patentees contend that the period of delay of 99 days for the Office's failure to respond to a reply under 35 U.S.C. 132 not later than four months after the date on which the reply was filed, (November 27, 2007 until March 4, 2008) overlaps with the Three Year Delay period (May 29, 2007 to September 16, 2008).

Accordingly, patentees submit that the total period of Office Delay is 1,014 days, which is the sum of the period of Three Year Delay (477 days) and the period of Examination Delay (636

days), reduced by the period of overlap (99 days). Considering that applicant delay is 144 (not 143 days as suggested by patentees) patentees assert entitlement to a patent term adjustment of 870 days (477 + 636 reduced by 99 overlap - 144 for applicant delay).

The Office agrees that the actions detailed above were not taken within the specified time frame, and thus, the entry of period of adjustment for examination delay of 636 days is correct. At issue is whether patentee should accrue 378 days of patent term adjustment (adjusted for overlap, per patentees' calculations) for the Office taking in excess of three years to issue the patent, as well as 636 days for Office failure to take certain actions within specified time frames (or examination delay).

The Office contends that 477 days overlap. Patentees' calculation of the period of overlap is inconsistent with the Office's interpretation of this provision. 35 U.S.C. 154(b)(2)(A) limits the adjustment of patent term, as follows:

> to the extent that the periods of delay attributable to grounds specified in paragraph (1) overlap, the period of any adjustment granted under this subsection shall not exceed the actual number of days the issuance of the patent was delayed.

Likewise, 37 CFR 1.703(f) provides that:

> To the extent that periods of delay attributable to the grounds specified in § 1.702 overlap, the period of adjustment granted under this section shall not exceed the actual number of days the issuance of the patent was delayed.

As explained in *Explanation of 37 CFR 1.703(f) and of the United States Patent and Trademark Office Interpretation of 35 U.S.C. 154(b)(2)(A)*, 69 Fed. Reg. 34283 (June 21, 2004), the Office interprets 35 U.S.C. 154(b)(2)(A) as permitting either patent term adjustment under 35 U.S.C. 154(b)(1)(A)(i)-(iv), or patent term adjustment under 35 U.S.C. 154(b)(1)(B), but not as permitting patent term adjustment under both 35 U.S.C. 154(b)(1)(A)(i)-(iv) and 154(b)(1)(B). Accordingly, the Office implements the overlap provision as follows:

> If an application is entitled to an adjustment under 35 U.S.C. 154(b)(1)(B), the entire period during which the application was pending (except for periods excluded under 35 U.S.C. 154(b)(1)(B)(i)-(iii)), and not just the period beginning three years after the actual filing date of the application, is the period of delay under 35 U.S.C. 154(b)(1)(B) in determining whether periods of delay overlap under 35 U.S.C. 154(b)(2)(A). Thus, any days of delay for Office issuance of the patent more than 3 years after the filing date of the application, which overlap with the days of patent term adjustment accorded prior to the issuance of the patent will not result in any additional patent term adjustment. See 35 U.S.C. 154(b)(1)(B), 35 U.S.C. 154(b)(2)(A), and 37 CFR § 1.703(f). See *Changes to Implement Patent Term Adjustment Under Twenty Year Term; Final Rule*, 65 Fed. Reg. 56366 (Sept. 18, 2000). See also *Revision of Patent Term Extension and Patent Term Adjustment Provisions; Final Rule*, 69 Fed. Reg. 21704 (April 22, 2004), 1282 Off. Gaz. Pat. Office 100 (May 18, 2004). See also *Explanation of 37 CFR 1.703(f) and of the United States Patent and Trademark Office Interpretation of 35 U.S.C. 154(b)(2)(A)*, 69 Fed. Reg. 34283 (June 21, 2004).

The current wording of § 1.703(f) was revised in response to the misinterpretation of this provision by a number of applicants. The rule was slightly revised to more closely track the corresponding language of 35 U.S.C. 154(b)(2)(A). The relevant portion differs only to the extent that the statute refers back to provisions of the statute whereas the rule refers back to sections of the rule. This was not a substantive change to the rule nor did it reflect a change of the Office's interpretation of 35 U.S.C. 154(b)(2)(A). As stated in the *Explanation of 37 CFR 1.703(f) and of the United States Patent and Trademark Office Interpretation of 35 U.S.C. 154(b)(2)(A)*, the Office has consistently taken the position that if an application is entitled to an adjustment under the three-year pendency provision of 35 U.S.C. 154(b)(1)(B), the entire period during which the application was pending before the Office (except for periods excluded under 35 U.S.C. 154(b)(1)(B)(i)-(iii)), and not just the period beginning three years after the actual filing date of the application, is the relevant period under 35 U.S.C.

154(b)(1)(B) in determining whether periods of delay "overlap" under 35 U.S.C. 154(b)(2)(A).

This interpretation is consistent with the statute. Taken together the statute and rule provide that to the extent that periods of delay attributable to grounds specified in 35 U.S.C. 154(b)(1) and in corresponding § 1.702 overlap, the period of adjustment granted shall not exceed the actual number of days the issuance of the patent was delayed. The grounds specified in these sections cover the A) guarantee of prompt Patent and Trademark Office responses, B) guarantee of no more than three-year application pendency, and C) guarantee or adjustments for delays due to interference, secrecy orders and appeals. A section by section analysis of 35 U.S.C. 154(b)(2)(A) specifically provides that:

> Section 4402 imposes limitations on restoration of term. In general, pursuant to [35 U.S.C.] 154(b)(2)(A)-(C), total adjustments granted for restorations under [35 U.S.C. 154](b)(1) are reduced as follows: (1) To the extent that there are multiple grounds for extending the term of a patent that may exist simultaneously (e.g., delay due to a secrecy order under [35 U.S.C.] 181 and administrative delay under [35 U.S.C.] 154(b)(1)(A)), the term should not be extended for each ground of delay but only for the actual number of days that the issuance of a patent was delayed; See 145 Cong. Rec. S14,718[1]

As such, the period for over three-year pendency does not overlap only to the extent that the actual dates in the period beginning three years after the date on which the application was filed overlap with the actual dates in the periods for failure of the Office to take action within specified time frames. In other words, consideration of the overlap does not begin three years after the filing date of the application.

In this instance, the relevant period under 35 U.S.C. 154(b)(1)(B) in determining whether periods of delay "overlap" under 35 U.S.C. 154(b)(2)(A) is the entire period during which

---

[1] The AIPA is title IV of the Intellectual Property and Communications Omnibus Reform Act of 1999 (S. 1948), which was incorporated and enacted as law as part of Pub. L. 106-113. The Conference Report for H.R. 3194, 106th Cong. 1st Sess. (1999), which resulted in Pub. L. 106-113, does not contain any discussion (other than the incorporated language) of S. 1948. A section-by-section analysis of S. 1948, however, was printed in the Congressional Record at the request of Senator Lott, See 145 Cong. Rec. S14,708-26 (1999)(daily ed. Nov. 17, 1999).

the application was pending before the Office, May 28, 2004, to the date the patent issued on September 16, 2008. Prior to the issuance of the patent, 636 days of patent term adjustment were accorded for the Office failing to respond within a specified time frame during the pendency of the application. All of the 477 days for Office delay in issuing the patent overlap with the 636 days of Office delay. During that time, the issuance of the patent was delayed by 477 days, not 477 + 636 days.

The Office took 14 months and 537 days to issue a first Office action. Additionally, the Office did not respond to the reply of July 26, 2007, until March 4, 2008, 4 months and 99 days after the date on which the reply was filed. Otherwise, the Office took all actions set forth in 37 CFR 1.702(a) within the prescribed time frames. Nonetheless, given the 636 days of Office delay and the 144 days of applicant delay and the time allowed within the time frames for processing and examination, the application issued three years and 477 days after its filing date. Accordingly, 636 days of patent term adjustment (not 636 and 477 days) was properly entered because the period of delay of 477 days attributable to the delay in the issuance of the patent overlaps with the adjustment of 636 days attributable to grounds specified in §§ 1.702(a)(1) and (a)(2). Entry of both periods is not warranted.

Accordingly, at issuance, the Office properly entered no additional days of patent term adjustment for the Office taking in excess of three years to issue the patent.

In view of the additional period of reduction pursuant to 37 CFR 1.704(c)(10), the patent term adjustment indicated on the patent should be 492 days (636 days of Office delay - 144 days of applicant delay).

The Office will charge the $200.00 fee set forth in 37 CFR 1.18(e) to the Deposit Account as authorized. No additional fees are required.

The application file is being forwarded to the Certificates of Correction Branch for issuance of a certificate of correction in order to rectify this error. The Office will issue a certificate of correction indicating that the term of the above-identified patent is extended or adjusted by 492 days.

Telephone inquiries specific to this matter should be directed to the undersigned at (571) 272-3211.

Christina Tartera Donnell

Christina Tartera Donnell
Senior Petitions Attorney
Office of Petitions

Enclosure: Copy of DRAFT Certificate of Correction

Draft

UNITED STATES PATENT AND TRADEMARK OFFICE

CERTIFICATE OF CORRECTION

PATENT : 7,425,553 B2

DATED : Sep. 16, 2008

INVENTOR(S) : Attardo et al.

It is certified that error appears in the above-identified patent and that said Letters Patent is hereby corrected as shown below:

On the cover page,

[*] Notice: Subject to any disclaimer, the term of this patent is extended or adjusted under 35 USC 154(b) by (504) days

Delete the phrase "by 504 days" and insert – by 492 days--

UNITED STATES PATENT AND TRADEMARK OFFICE

COMMISSIONER FOR PATENTS
UNITED STATES PATENT AND TRADEMARK OFFICE
P.O. BOX 1450
ALEXANDRIA, VA 22313-1450
www.uspto.gov

MAILED

JUN 01 2010

OFFICE OF PETITIONS

WILSON, SONSINI, GOODRICH & ROSATI
650 PAGE MILL ROAD
PALO ALTO CA 94304-1050

In re Patent No. 7,425,553	:	DECISION ON REQUEST FOR
ATTARDO et al.	:	RECONSIDERATION OF
Issue Date: September 16, 2008	:	PATENT TERM ADJUSTMENT AND
Application No. 10/857,458	:	NOTICE OF INTENT TO ISSUE
Filed: May 28, 2004	:	CERTIFICATE OF CORRECTION
Attorney Docket No. 35933-704-201	:	

This is a decision on the "Response to Decision on Request for Reconsideration of Patent Term Adjustment under 37 C.F.R. § 1.705(d) and to Notice of Intent to Issue Certificate of Correction" filed on June 18, 2009, which is being treated as a renewed petition under 37 CFR 1.705(d) requesting that the patent term adjustment indicated on the above-identified patent be corrected to indicate that the term of the above-identified patent is extended or adjusted by eight hundred seventy-one (871) days. This is also in response to the "Supplemental Response to Decision on Request for Reconsideration of Patent Term Adjustment under 37 C.F.R. § 1.705(d) and to Notice of Intent to Issue Certificate of Correction" ("supplemental petition under 37 CFR 1.705(d)") filed January 26, 2010.

The renewed petition under 37 CFR 1.705(d)[1] is granted to the extent that the term of the above-identified patent is extended or adjusted by **eight hundred seventy (870) days**. The supplemental petition under 37 CFR 1.705(d) is dismissed as untimely filed.

[1] The renewed petition under 37 CFR 1.705(d) was timely filed on June 18, 2009, within one month of the mailing of the decision on May 19, 2009.

As stated in the decision mailed May 19, 2009, the Office concluded that applicant delay is 144 (132 + 12) days, not 143 days as asserted by patentee. Patentee was assessed a first period of delay of 132 days pursuant to 37 CFR 1.704(c)(8), beginning on the day after the date the initial reply to the non-final Office action was filed, July 27, 2007, and ending on the date that the IDS was filed, December 5, 2007. Additionally, patentee was assessed a second period of delay of 12 days pursuant to 37 CFR 1.704(c)(10)(i), beginning on the date on which the petition under 37 CFR 1.48 was filed, June 19, 2008, and ending on the mailing of the decision in response to the petition, June 30, 2008.

Accordingly, the patent term adjustment is 870 days (636 days of A delay + 477 days of B delay - 99 days of overlap - 144 days of applicant delay).

The Office will *sua sponte* issue a certificate of correction. Pursuant to 37 CFR 1.322, the Office will not issue a certificate of correction without first providing assignee or patentee an opportunity to be heard. Accordingly, patentee is given **one (1) month or thirty (30) days**, whichever is longer, from the mail date of this decision to respond. No extensions of time will be granted under 37 CFR 1.136.

This matter is being referred to the Certificates of Correction Branch for issuance of a certificate of correction. The Office will issue a certificate of correction indicating that the term of the above-identified patent is extended or adjusted by **eight hundred seventy (870) days.**

Telephone inquiries specific to this matter should be directed to the undersigned at (571) 272-3211.

C. T. Donnell

Christina Tartera Donnell
Senior Petitions Attorney
Office of Petitions

Enclosure: Copy of DRAFT Certificate of Correction

UNITED STATES PATENT AND TRADEMARK OFFICE

CERTIFICATE OF CORRECTION

PATENT:	7,425,553 B2	
DATED:	Sep. 16, 2008	**DRAFT**
INVENTOR(S):	Attardo et al.	

It is certified that error appears in the above-identified patent and that said Letters Patent is hereby corrected as shown below:

On the cover page,

[*] Notice: Subject to any disclaimer, the term of this patent is extended or adjusted under 35 USC 154(b) by 504 days

Delete the phrase "by 504 days" and insert – by 870 days--

PALM INTRANET

Day : Tuesday
Date: 6/1/2010
Time: 08:31:24

PTA Calculations for Application: 10/857458			
Application Filing Date:	05/28/2004	PTO Delay (PTO):	636
Issue Date of Patent:	09/16/2008	Three Years:	0
Pre-Issue Petitions:	0	Applicant Delay (APPL):	132
Post-Issue Petitions:	0	Total PTA (days):	870
PTO Delay Adjustment:	366		

File Contents History

Number	Date	Contents Description	PTO	APPL	START
85	05/27/2010	ADJUSTMENT OF PTA CALCULATION BY PTO	378		
81	05/19/2009	RECORD A PETITION DECISION OF GRANTED FOR PATENT TERM ADJUSTMENT AFTER ISSUE			
80	05/18/2009	ADJUSTMENT OF PTA CALCULATION BY PTO		12	
76.5	08/27/2008	PTA 36 MONTHS			
76	09/16/2008	PATENT ISSUE DATE USED IN PTA CALCULATION			
75	08/14/2008	EXPORT TO FINAL DATA CAPTURE			
74	08/13/2008	FINISHED INITIAL DATA CAPTURE			
73	08/13/2008	DISPATCH TO FDC			
71	07/21/2008	ISSUE FEE PAYMENT VERIFIED			
70	07/22/2008	APPLICATION IS CONSIDERED READY FOR ISSUE			
69	07/21/2008	ISSUE FEE PAYMENT VERIFIED			
68	07/21/2008	ISSUE FEE PAYMENT RECEIVED			
67	06/19/2008	RULE 47 / 48 CORRECTION OF INVENTORSHIP PAPERS FILED			
66	07/09/2008	FILING RECEIPT - CORRECTED			
65	06/30/2008	MAIL MISCELLANEOUS COMMUNICATION TO APPLICANT			
64	06/25/2008	MISCELLANEOUS COMMUNICATION TO APPLICANT - NO ACTION COUNT			
63	06/23/2008	PUBS CASE REMAND TO TC			
62	05/12/2008	EXPORT TO INITIAL DATA CAPTURE			
60	05/08/2008	MAIL NOTICE OF ALLOWANCE			
59	05/07/2008	ISSUE REVISION COMPLETED			
58	05/07/2008	DOCUMENT VERIFICATION			
57	05/07/2008	EXAMINER'S AMENDMENT COMMUNICATION			

56	05/05/2008	NOTICE OF ALLOWANCE DATA VERIFICATION COMPLETED			
55	05/05/2008	CASE DOCKETED TO EXAMINER IN GAU			
54	05/05/2008	NOTICE OF ALLOWABILITY			
53	05/02/2008	MAIL MISCELLANEOUS COMMUNICATION TO APPLICANT			
52	04/30/2008	MISCELLANEOUS COMMUNICATION TO APPLICANT - NO ACTION COUNT			
51	04/21/2008	RULE 47 / 48 CORRECTION OF INVENTORSHIP PAPERS FILED			
50	04/24/2008	DATE FORWARDED TO EXAMINER			
49	04/21/2008	AMENDMENT AFTER FINAL REJECTION			
47	03/04/2008	MAIL FINAL REJECTION (PTOL - 326)	99		40
46	02/25/2008	FINAL REJECTION			
42	12/05/2007	INFORMATION DISCLOSURE STATEMENT CONSIDERED			
41	02/15/2008	DATE FORWARDED TO EXAMINER			
40	07/26/2007	RESPONSE AFTER NON-FINAL ACTION			
39	01/31/2008	MISCELLANEOUS INCOMING LETTER			
38	12/05/2007	REFERENCE CAPTURE ON IDS			
37	12/05/2007	INFORMATION DISCLOSURE STATEMENT (IDS) FILED		132	40
35	12/05/2007	INFORMATION DISCLOSURE STATEMENT (IDS) FILED			
34	11/27/2007	CHANGE IN POWER OF ATTORNEY (MAY INCLUDE ASSOCIATE POA)			
33	11/21/2007	CORRESPONDENCE ADDRESS CHANGE			
32	07/26/2007	AFFIDAVIT(S) (RULE 131 OR 132) OR EXHIBIT(S) RECEIVED			
31	07/26/2007	PRELIMINARY AMENDMENT			
30	06/01/2007	MAIL POST CARD			
29	05/24/2007	EMAIL NOTIFICATION			
28	05/23/2007	MAIL NON-FINAL REJECTION			
27	05/17/2007	NON-FINAL REJECTION			
26	05/03/2005	INFORMATION DISCLOSURE STATEMENT CONSIDERED			
25	03/30/2007	DATE FORWARDED TO EXAMINER			
24	03/15/2007	RESPONSE TO ELECTION / RESTRICTION FILED			
23	03/15/2007	REQUEST FOR EXTENSION OF TIME - GRANTED			

22	01/23/2007	ELECTRONIC REVIEW			
21	01/17/2007	EMAIL NOTIFICATION			
20	01/16/2007	MAIL RESTRICTION REQUIREMENT	537		-1
19	01/08/2007	REQUIREMENT FOR RESTRICTION / ELECTION			
18	12/08/2005	CORRESPONDENCE ADDRESS CHANGE			
17	12/08/2005	CHANGE IN POWER OF ATTORNEY (MAY INCLUDE ASSOCIATE POA)			
16	09/07/2005	IFW TSS PROCESSING BY TECH CENTER COMPLETE			
15	09/07/2005	CASE DOCKETED TO EXAMINER IN GAU			
14	05/03/2005	REFERENCE CAPTURE ON IDS			
13.7	05/03/2005	INFORMATION DISCLOSURE STATEMENT (IDS) FILED			
13	05/03/2005	INFORMATION DISCLOSURE STATEMENT (IDS) FILED			
12	10/14/2004	APPLICATION RETURN FROM OIPE			
11	10/14/2004	APPLICATION RETURN TO OIPE			
10	10/14/2004	APPLICATION DISPATCHED FROM OIPE			
9	10/14/2004	APPLICATION IS NOW COMPLETE			
8	09/28/2004	ADDITIONAL APPLICATION FILING FEES			
7	09/28/2004	A STATEMENT BY ONE OR MORE INVENTORS SATISFYING THE REQUIREMENT UNDER 35 USC 115, OATH OF THE APPLIC			
6	07/28/2004	NOTICE MAILED--APPLICATION INCOMPLETE--FILING DATE ASSIGNED			
4	07/03/2004	CLEARED BY OIPE CSR			
3	07/03/2004	CASE CLASSIFIED BY OIPE			
2	06/17/2004	IFW SCAN & PACR AUTO SECURITY REVIEW			
1	05/28/2004	INITIAL EXAM TEAM NN			

Search Another: Application# Search

EXPLANATION OF PTA CALCULATION

EXPLANATION OF PTE CALCULATION

To go back, right click here and select Back. To go forward, right click here and select Forward. To refresh, right click here and select Refresh.

Back to OASIS | Home page

UNITED STATES PATENT AND TRADEMARK OFFICE

Commissioner for Patents
United States Patent and Trademark Office
P.O. Box 1450
Alexandria, VA 22313-1450
www.uspto.gov

EDWARD W. BULCHIS
DORSEY & WHITNEY LLP
SUITE 3400
1420 FIFTH AVENUE
SEATTLE, WA 98101

COPY MAILED

SEP 24 2007

OFFICE OF PETITIONS

In re Application of :
Jeffrey J. Cronin et al :
Application No. 10/857,467 : ON PETITION
Filed: May 28, 2004 :
Attorney Docket No. 501295.01(30265/US)

This is a decision on the petition, filed September 21, 2007 under 37 CFR 1.313(c)(2) to withdraw the above-identified application from issue after payment of the issue fee.

The petition is **GRANTED**.

The above-identified application is withdrawn from issue for consideration of a submission under 37 CFR 1.114 (request for continued examination). See 37 CFR 1.313(c)(2).

Petitioner is advised that the issue fee paid on August 27, 2007 in the above-identified application cannot be refunded. If, however, the above-identified application is again allowed, petitioner may request that it be applied towards the issue fee required by the new Notice of Allowance.[1]

Telephone inquiries should be directed to Irvin Dingle at (571) 272-3210.

This matter is being referred to Technology Center AU 2189 for processing of the request for continued examination under 37 CFR 1.114 and for consideration of the concurrently filed Information Disclosure Statement.

Irvin Dingle
Petitions Examiner
Office of Petitions

---

[1] The request to apply the issue fee to the new Notice may be satisfied by completing and returning the new Issue Fee Transmittal Form PTOL-85(b), which includes the following language thereon: Commissioner for Patents is requested to apply the Issue Fee and Publication Fee (if any) or re-apply any previously paid issue fee to the application identified above. Petitioner is advised that, whether a fee is indicated as being due or not, the Issue Fee Transmittal Form **must** be completed and timely submitted to avoid abandonment. Note the language in bold text on the first page of the Notice of Allowance and Fee(s) Due (PTOL-85).

UNITED STATES PATENT AND TRADEMARK OFFICE

COMMISSIONER FOR PATENTS
UNITED STATES PATENT AND TRADEMARK OFFICE
P.O. BOX 1450
ALEXANDRIA, VA 22313-1450
www.uspto.gov

ROBERT E. KREBS
THELEN REID & PRIEST
P.O. BOX 640640
SAN JOSE, CA 95164-0640

COPY MAILED

JAN 20 2006

OFFICE OF PETITIONS

In re Application of	:	
Eduardo Chi Sing et al	:	
Application No. 10/857,471	:	DECISION ON PETITION
Filed: May 28, 2004	:	TO WITHDRAW
Attorney Docket No. 034298-000195	:	FROM RECORD
	:	

This is a decision on the Request to Withdraw as attorney or agent of record under 37 C.F.R. § 1.36(b), filed May12, 2005.

The request is **APPROVED**.

A grantable request to withdraw as attorney/agent of record must be signed by every attorney/agent seeking to withdraw or contain a clear indication that one attorney is signing on behalf of another/others. A request to withdraw will not be approved unless at least 30 (thirty) days would remain between the date of approval and the later of the expiration date of a time to file a response or the expiration date of the maximum time period which can be extended under 37 C.F.R. § 1.136(a).

The request was signed by Hal Bohner on behalf of all attorneys of record.

All attorneys/agents of record have been withdrawn.

Applicants are reminded that there is no attorney of record at this time.

The correspondence address of record has been changed and the new correspondence address is the address indicated below.

This matter is being referred to Technology Center AU 3767.

Telephone inquires concerning this decision should be directed to Wan Laymon at 571-272-3220.

Denise Pothier for
Amelia Au
Petitions Examiner
Office of Petitions

cc: THOMAS MILLER
MARSHALL GERSTEIN & BOUM
233 SOUTH WACKER DRIVE
6300 SEARS TOWER
CHICAGO, IL 60606-6402

UNITED STATES PATENT AND TRADEMARK OFFICE

Commissioner for Patents
United States Patent and Trademark Office
P.O. Box 1450
Alexandria, VA 22313-1450
www.uspto.gov

THOMAS MILLER
MARSHALL GERSTEIN & BOUM
233 SOUTH WACKER DRIVE
6300 SEARS TOWER
CHICAGO IL 60606-6402

COPY MAILED

JAN 12 2007

OFFICE OF PETITIONS

In re Application of :
Educardo Chi Sing et al. :
Application No. 10/857,471 : ON PETITION
Filed: May 28, 2004 :
Attorney Docket No. 034298-000195 :

This is a decision on the petition filed September 7, 2006 under 37 CFR 1.137 (b) to revive the above-identified application.

The petition under 37 CFR 1.137 (b) is **GRANTED**.

This application became abandoned for failure to timely pay the issue fee on or before May 24, 2006. This application became abandoned May 25, 2006. Accordingly, a Notice of Abandonment was mailed August 28, 2006.

A review of the record reveals that the Issue Fee Transmittal Form (PTOL-85b) has not been supplied. If petitioner desires to have the information normally found thereon printed on the patent, an Issue Fee Transmittal Form should be completed and returned to the Publishing Division within ONE (1) MONTH from the mail date of this decision.

This application is being forwarded to the Publishing Division to be processed into a patent.

Telephone inquiries concerning this matter should be directed to the undersigned Petitions Attorney at (571) 272-3212.

Patricia Faison-Ball

Patricia Faison-Ball
Senior Petitions Attorney
Office of Petitions

United States
Patent And
Trademark Office

P.O. Box 1450, Alexandria, Virginia 22313-1450 – www.uspto.gov

PETITION DECISION

10/07/04

Fay, Sharpe, Fagan, Minnich & McKee, LLP
1100 Superior Avenue
Seventh Floor
Cleveland, OH 44114-2518

Dear Applicant:

The Box PG Pub replacement drawings for application number 10/857490 received on 09/07/04 by the U. S. Patent and Trademark Office will be included for patent publication.

Telephone inquiries should be directed to Kaletus King, Office of Pre-Grant Publication 703 605-4283.

Kaletus King

Signature of Reviewer, Office of Pre-Grant Publication

UNITED STATES PATENT AND TRADEMARK OFFICE

COMMISSIONER FOR PATENTS
UNITED STATES PATENT AND TRADEMARK OFFICE
WASHINGTON, D.C. 20231
www.uspto.gov

102006

OCT 12 2006

SUGRUE MION, PLLC
2100 PENNSYLVANIA AVENUE, N.W.
SUITE 800
WASHINGTON, DC 20037

In re Application of:	:	
Hiroki Fujita	:	DECISION ON PETITION
Serial No.: 10/857,495	:	TO WITHDRAW FINALITY OF OFFICE
Filed: June 01, 2004	:	ACTION
Attorney Docket No.: Q81631	:	

This is a decision on the petition, filed September 18, 2006, requesting that the finality of the Office action of August 18, 2006 be withdrawn.

The petition is DENIED.

Petitioner asserts that the Final Office action of August 18, 2005 contains new grounds of rejection, which are not necessitated by an amendment and, thus, it is improper for the examiner to make the action final.

A review of the application file record indicates that a non-final Office action was issued on October 17, 2005. An amendment was filed on February 17, 2006 in response to an Office action of October 17, 2005. The amendment introduces into the claims subject matter that was not earlier presented. Further search was conducted and an Office action was mailed on May 15, 2006, and the action included new grounds of rejection and was made final. A request for reconsideration was filed on June 15, 2006, without an amendment to the claims. In response, an Advisory action was mailed on June 23, 2006. Petitioner then filed a Request for Continued Examination on July 14, 2006, amending the previously considered claims and adding new claims. In response, an Office action was mailed on August 18, 2006, allowing the amended claims and rejecting the newly added claims on identical grounds of rejection as used in the Final Office action of May 15, 2006, and was made final. The instant petition was filed under 37 CFR 1.181, on September 18, 2006, to request supervisory review of the propriety of the finality of the Office action of August 18, 2006.

Under MPEP § 706.07(h), an "action immediately subsequent to the filing of an RCE with a submission and fee under 37 CFR 1.114 may be made final only if the conditions set forth in

MPEP § 706.07(b) for making a first action final in a continuing application are met." MPEP § 706.07(b) states that an action may be made final where the rejected claims of the new application "(1) are drawn to the same invention claimed in the earlier application, and (2) would have been properly finally rejected on the grounds and art of record in the next Office action if they had been entered in the earlier application."

The rejected claims in the final Office action of August 18, 2006 are claims 31-45. While these claims were newly presented, they were identical to previously rejected claims 1, 3-5, and 7-30 in all respects save one. The newly added claims added the limitation that the humidity detection electrodes were formed "on the surface of" the humidity sensitive porous ceramic layer. For the rejection of these claims to be properly made final, the new limitation must be drawn to the same invention and have been properly finally rejected on the grounds and art of record set forth in the previous Office action.

The rejection of the new claims in the final Office action of August 18, 2006 was an exact duplicate of the rejection of the previously submitted claims in the previous Office action of March 15, 2006. The new limitation requiring that the humidity detection electrodes were formed "on the surface of" the humidity sensitive porous ceramic layer required no new language, since the rejection of the previous claims had stated that the Nakada reference disclosed "a humidity sensor comprising a porous ceramic resistor (paragraph 10) surrounded by Pt electrodes." This statement appeared at page 2, first paragraph of the Office action mailed March 15, 2006, and at page 2, first paragraph of the Office action mailed March 15, 2006.

Since the new rejection required no change in language to clearly address the newly added limitation, the rejected claims meet the requirement that they "would have been properly finally rejected on the grounds and art of record in the next Office action if they had been entered in the earlier application." Additionally, the addition of new language to the claims does not cause the claims to be directed to a different invention, since the added language merely further clarifies the previously claimed invention rather than being directed towards a new invention.

Furthermore, an amendment with the filing of a Request for Continued Examination <u>cannot</u> be drawn to a different invention than that claimed previously. MPEP 706.07(h) states that "[a]pplicants cannot file an RCE to obtained continued examination on the basis of claims that are independent and distinct from the claims previously claimed." The claims in the RCE must have been drawn to the same invention as those claimed previously in order to satisfy the conditions of an RCE filing.

For the above-stated reasons, the finality of the Office action of August 18, 2006 is proper and the petition is denied.

The statutory period for reply continues to run from the date of the final Office action. This period for reply may not be extended to exceed 6 (six) months from August 18, 2006, the date of the final Office action.

Any inquiry regarding this decision should be directed to Edward Lefkowitz, Supervisory Patent Examiner, at (571) 272-2180.

Richard K. Seidel, TC Director
Technology Center 2800
Semiconductors, Electrical and Optical
Systems and Components

UNITED STATES PATENT AND TRADEMARK OFFICE

Commissioner for Patents
United States Patent and Trademark Office
P.O. Box 1450
Alexandria, VA 22313-1450
www.uspto.gov

IRELL & MANELLA LLP
840 NEWPORT CENTER DRIVE
SUITE 400
NEWPORT BEACH, CA 92660

COPY MAILED
SEP 12 2006
OFFICE OF PETITIONS

In re Application of :
Long et al. :
Application No. 10/857,513 :
Filed: May 28, 2004 :
Attorney Docket No. 155634-0167 (P070D) :

Decision on Petition

This decision is in response to the petition under 37 CFR 1.47 filed September 27, 2004.

The petition is **dismissed**.

Any request for reconsideration of this decision must be submitted within TWO (2) MONTHS from the mail date of this decision. Extensions of time under 37 CFR 1.136(a) are permitted. No further petition fee is required for the request. Any response should be entitled "Request for Reconsideration of Petition Under 37 CFR 1.47(b)" and may include an oath or declaration executed by the current non-signing inventor(s). **Failure to respond will result in abandonment of the application.**

A declaration signed by all the inventors other than inventor Jeong was filed with the application. The declaration lists four inventors. The name of inventor Kevin Vu has been crossed out.

The inventors of record are:
(1) Wilson Long,
(2) Woocheol Jeong, and
(3) Kevin Tu.

A Notice to File Missing Parts was mailed July 26, 2004.

The reply to the Notice to File Missing Parts appears to be an exact copy of a petition under 37 CFR 1.47 filed in application no. 09/884,804, on October 19, 2001.

The instant application is a continuation of application no. 09/884,804, which was accorded status under 37 CFR 1.47. When a parent application has been accorded status under 37 CFR 1.47, an applicant may normally submit a copy of the declaration from the parent application and

a copy of the parent application's Rule 47 decision letter instead of submitting a new petition under 37 CFR 1.47.[1]

A copy of the decision granting Rule 47 status from the parent application should be submitted.

Prior decisions in the parent application required the submission of a supplemental declaration. A copy of the supplemental declaration should be supplied.

A petition under 37 CFR 1.183 to waive the requirements of 37 CFR 1.63 and 1.67 is required. 37 CFR 1.63(d)(1) states, with emphasis added,

> A newly executed oath or declaration is not required under § 1.51(b)(2) and § 1.53(f) in a continuation or divisional application, provided that:
>
> (i) The prior nonprovisional application contained an oath or declaration *as prescribed by paragraphs (a) through (c) of this section*;

The declaration filed with the instant application is not a declaration complying with paragraphs (a) thorough (c) of 37 CFR 1.63.

Receipt of a copy of the decision granting the petition under 37 CFR 1.183 in the parent application will be sufficient grounds for granting waiver of the rules for the instant application.

Further correspondence with respect to this matter should be addressed as follows:

By mail: Mail Stop Petition
Commissioner for Patents
P.O. Box 1450
Alexandria, VA 22313-1450

By facsimile: (571) 273-8300
Attn: Office of Petitions

By hand: U.S. Patent and Trademark Office
Customer Service Window
Randolph Building
401 Dulany Street
Alexandria, VA 22314

---

[1] 37 CFR 1.63(d)(3) states, "Where the executed oath or declaration of which a copy is submitted for a continuation or divisional application was originally filed in a prior application accorded status under § 1.47, the copy of the executed oath or declaration for such prior application must be accompanied by . . . A copy of the decision granting a petition to accord § 1.47 status to the prior application, unless all inventors or legal representatives have filed an oath or declaration to join in an application accorded status under § 1.47 of which the continuation or divisional application claims a benefit."

Telephone inquiries regarding this communication should be directed to Petitions Attorney Shirene Brantley at (571) 272-3230.

Shirene Willis Brantley
Senior Petitions Attorney
Office of Petitions

UNITED STATES PATENT AND TRADEMARK OFFICE

Commissioner for Patents
United States Patent and Trademark Office
P.O. Box 1450
Alexandria, VA 22313-1450
www.uspto.gov

IRELL & MANELLA LLP
840 NEWPORT CENTER DRIVE
SUITE 400
NEWPORT BEACH, CA 92660

COPY MAILED
DEC 29 2006
OFFICE OF PETITIONS

In re Application of :
Long et al. :
Application No. 10/857,513 : Decision on Petition
Filed: May 28, 2004 :
Attorney Docket No. 155634-0167 (P070D) :

This decision is in response to the petition under 37 CFR 1.83 filed November 13, 2006 (certificate of mailing date November 9, 2006), requesting waiver of 37 CFR 1.63 and 1.67.

The petition is **dismissed**.

Any request for reconsideration of this decision must be submitted within TWO (2) MONTHS from the mail date of this decision. Extensions of time under 37 CFR 1.136(a) are permitted. No further petition fee is required for the request. Any response should be entitled "Request for Reconsideration of Petition Under 37 CFR 1.47(b)" and may include an oath or declaration executed by the current non-signing inventor(s). **Failure to respond will result in abandonment of the application.**

As stated in the September 12, 2006 decision on petition:

Prior decisions in the parent application required the submission of a supplemental declaration. A copy of the supplemental declaration should be supplied.

Petitioners have not submitted a copy of the September 16, 2002 supplemental declaration filed in application no. 09/884,804.

The $400.00 Rule 183 petition fee will be charged to deposit account no. 09-0946.

Further correspondence with respect to this matter should be addressed as follows:

By mail: Mail Stop Petition
Commissioner for Patents
P.O. Box 1450
Alexandria, VA 22313-1450

By facsimile: (571) 273-8300
Attn: Office of Petitions

By hand: U.S. Patent and Trademark Office
Customer Service Window
Randolph Building
401 Dulany Street
Alexandria, VA 22314

Telephone inquiries regarding this communication should be directed to Petitions Attorney Shirene Brantley at (571) 272-3230.

Shirene Willis Brantley

Shirene Willis Brantley
Senior Petitions Attorney
Office of Petitions

UNITED STATES PATENT AND TRADEMARK OFFICE

Commissioner for Patents
United States Patent and Trademark Office
P.O. Box 1450
Alexandria, VA 22313-1450
www.uspto.gov

IRELL & MANELLA LLP
840 NEWPORT CENTER DRIVE
SUITE 400
NEWPORT BEACH, CA 92660

COPY MAILED

APR 1 2 2007

OFFICE OF PETITIONS

In re Application of :
Long et al. :
Application No. 10/857,513 :
Filed: May 28, 2004 :
Attorney Docket No. 155634-0167 (P070D) :

Decision on Petition

This is in response to the reconsideration petition under 37 CFR 1.47 and 37 CFR 1.183 to waive 37 CFR 1.63 and 1.67, filed February 12, 2007 (certificate of mailing date February 8, 2007).

The petition under 37 CFR 1.47(a) is **GRANTED**.

The petition under 37 CFR 1.183 to waive 37 CFR 1.63 and 1.67 is **GRANTED**.

A declaration signed by all the inventors other than inventor Jeong was filed with the application. The declaration lists four inventors. The name of inventor Kevin Vu has been crossed out.

The inventors of record are:
(1) Wilson Long,
(2) Woocheol Jeong, and
(3) Kevin Tu.

A Notice to File Missing Parts was mailed July 26, 2004.

The reply to the Notice to File Missing Parts appears to be an exact copy of a petition under 37 CFR 1.47 filed in application no. 09/884,804, on October 19, 2001.

The instant application is a continuation of application no. 09/884,804, which was accorded status under 37 CFR 1.47. When a parent application has been accorded status under 37 CFR 1.47, an applicant may normally submit a copy of the declaration from the parent application and a copy of the parent application's Rule 47 decision letter instead of submitting a new petition under 37 CFR 1.47.[1]

[1] 37 CFR 1.63(d)(3) states, "Where the executed oath or declaration of which a copy is submitted for a continuation or divisional application was originally filed in a prior application accorded status under § 1.47, the copy of the executed oath or declaration for such prior application must be accompanied by . . . A copy of the decision granting a petition to accord § 1.47 status to the

Petitioner has provided a copy of the September 16, 2002 supplemental declaration filed in the parent application and a copy of the decision granting Rule 47 status in the parent application and granting the petition under 37 CFR 1.183 to waive 37 CAFR 1.48(a), 1.63, and 1.67 in the parent application .

The above-identified application and papers have been reviewed and found in compliance with 37 CFR 1.47(a). This application is hereby accorded Rule 1.47(a) status. No fee has been or will be charged.

The Office will not forward notice of this application's filing to the non-signing inventor because notice regarding the filing of the prior application has already been sent to the non-signing inventor.

After this decision is mailed, the application will be forwarded to Technology Center G.A.U. 2617 for examination in due course.

Telephone inquiries regarding this communication should be directed to the undersigned at (571) 272-3230.

Shirene Willis Brantley

Shirene Willis Brantley
Senior Petitions Attorney
Office of Petitions

---

prior application, unless all inventors or legal representatives have filed an oath or declaration to join in an application accorded status under § 1.47 of which the continuation or divisional application claims a benefit."

UNITED STATES PATENT AND TRADEMARK OFFICE

COMMISSIONER FOR PATENTS
UNITED STATES PATENT AND TRADEMARK OFFICE
P.O. BOX 1450
ALEXANDRIA, VA 22313-1450
www.uspto.gov

COPY MAILED

JAN 24 2007

OFFICE OF PETITIONS

SWARTZ & WILSON, P.L.C.
ATTORNEYS AT LAW
SUITE 200
908 COURT STREET
SAGINAW, MI 48602

In re Application of :
Robert Musselman :
Application No. 10/857,523 : DECISION GRANTING PETITION
Filed: June 1, 2004 : UNDER 37 CFR 1.137(b)
Attorney Docket No. 20042007.01 :

This is a decision on the petition, filed October 24, 2006, which is being treated as a petition under 37 CFR 1.137(b) to revive the instant nonprovisional application for failure to timely notify the U.S. Patent and Trademark (USPTO) of the filing of an application in a foreign country, or under a multinational treaty that requires publication of applications eighteen months after filing. *See* 37 CFR 1.137(f).

The petition is **GRANTED**.

Petitioner states that the instant nonprovisional application is the subject of an application filed in an eighteen month publication country on May 27, 2005. However, the USPTO was unintentionally not notified of this filing within 45 days subsequent to the filing of the subject application in an eighteen month publication country.

In view of the above, this application became abandoned pursuant to 35 U.S.C. §122(b)(2)(B)(iii) and 37 CFR 1.213(c) for failure to timely notify the Office of the filing of an application in a foreign country or under a multilateral international agreement that requires publication of applications 18 months after filing.

A petition to revive an application abandoned pursuant to 35 U.S.C. § 122(b)(2)(B)(iii) for failure to notify the USPTO of a foreign filing must be accompanied by:

(1) the required reply which is met by the notification of such filing in a foreign country or under a multinational treaty;
(2) the petition fee as set forth in 37 CFR 1.17(m); and
(3) a statement that the entire delay in filing the required reply from the due date of the reply until the filing of a grantable petition was unintentional.

The petition is found to be in compliance with 37 CFR 1.137(b). Accordingly, the failure to timely notify the USPTO of a foreign or international filing within 45 days after the date of filing of such foreign or international application as provided by 35 U.S.C. § 122(b)(2)(B)(iii) and 37 CFR 1.213(c) is accepted as having been unintentionally delayed.

The previous Request and Certification under 35 U.S.C. § 122(b)(2)(B)(i) has been rescinded. A Notice Regarding Rescission of Nonpublication Request which sets forth the projected publication date of February 8, 2007 was mailed on November 9, 2006.

A Notice of Allowability and a Notice of Allowance and Fee(s) Due were mailed in this case on July 24, 2006. However, in view of the nonpublication request filed with the application, the Notice of Allowance and Fee(s) Due mailed in this case did not require the submission of a publication fee. In view of the rescinding of the nonpublication request, the $300 publication fee is due.

It is noted that petitioner submitted a petition fee of $1,370 rather than the $750 petition fee required under 37 CFR 1.17(m) for a small entity. Since, the petition fee was overpaid by $620, $300 is being applied to the publication fee due and the balance of $320 will be credited to counsel's deposit account.

Thereafter, the application will be referred to the Office of Publications for further processing.

Telephone inquires related to this decision should be directed to the undersigned at (571) 272-3204. Telephone inquiries related to processing at Publishing Division should be directed to (571) 272-4200.

Sherry D. Brinkley
Petitions Examiner
Office of Petitions

UNITED STATES PATENT AND TRADEMARK OFFICE

Commissioner for Patents
United States Patent and Trademark Office
P.O. Box 1450
Alexandria, VA 22313-1450
www.uspto.gov

MAILED

APR 27 2010

OFFICE OF PETITIONS

K&L GATES LLP
210 SIXTH AVENUE
PITTSBURGH PA 15222-2613

In re Application of	:	
Barry Scott HUREWITZ	:	
Application No. 10/857,526	:	DECISION ON PETITION
Filed: May 28, 2004	:	
Attorney Docket No. 040191	:	

This is a decision on the petition under the unintentional provisions of 37 CFR 1.137(b), filed February 12, 2010, to revive the above-identified application.

The petition is **GRANTED**.

The application became abandoned for failure to submit corrected drawings in a timely manner in reply to the Notice of Allowance and Fee(s) Due, mailed October 6, 2009, which set a period for reply of three (3) months. Accordingly, this application became abandoned on January 7, 2010.

The petition satisfies the requirements of 37 CFR 1.137(b) in that petitioner has supplied (1) the reply in the form of corrected drawings, (2) the petition fee of $1620; and (3) a proper statement of unintentional delay.

The Examiner assigned to this application has approved the corrected drawings filed with the petition on February 12, 2010.

Telephone inquiries concerning this decision should be directed to the undersigned at (571) 272-6735.

The application is being referred to the Office of Data Management for processing into a patent.

/dcg/
Diane C. Goodwyn
Petitions Examiner
Office of Petitions

UNITED STATES PATENT AND TRADEMARK OFFICE

COMMISSIONER FOR PATENTS
UNITED STATES PATENT AND TRADEMARK OFFICE
P.O. BOX 1450
ALEXANDRIA, VA 22313-1450
www.uspto.gov

COPY MAILED

JAN 24 2007

OFFICE OF PETITIONS

SWARTZ & WILSON, P.L.C.
SUITE 200
908 COURT STREET
SAGINAW, MI 48602

In re Application of
Robert Musselman
Application No. 10/857,528
Filed: June 1, 2004
Attorney Docket No. 20032008.09

DECISION GRANTING PETITION
UNDER 37 CFR 1.137(b)

This is a decision on the petition, filed October 24, 2006, which is being treated as a petition under 37 CFR 1.137(b) to revive the instant nonprovisional application for failure to timely notify the U.S. Patent and Trademark (USPTO) of the filing of an application in a foreign country, or under a multinational treaty that requires publication of applications eighteen months after filing. *See* 37 CFR 1.137(f).

The petition is **GRANTED**.

Petitioner states that the instant nonprovisional application is the subject of an application filed in an eighteen month publication country on May 27, 2005. However, the USPTO was unintentionally not notified of this filing within 45 days subsequent to the filing of the subject application in an eighteen month publication country.

In view of the above, this application became abandoned pursuant to 35 U.S.C. § 122(b)(2)(B)(iii) and 37 CFR 1.213(c) for failure to timely notify the Office of the filing of an application in a foreign country or under a multilateral international agreement that requires publication of applications 18 months after filing.

A petition to revive an application abandoned pursuant to 35 U.S.C. 122(b)(2)(B)(iii) for failure to notify the USPTO of a foreign filing must be accompanied by:

(1) the required reply which is met by the notification of such filing in a foreign country or under a multinational treaty;
(2) the petition fee as set forth in 37 CFR 1.17(m); and
(3) a statement that the entire delay in filing the required reply from the due date of the reply until the filing of a grantable petition was unintentional.

The petition has been found to be in compliance with 37 CFR 1.137(b). Accordingly, the failure to timely notify the USPTO of a foreign or international filing within 45 days after the date of filing of such foreign or international application as provided by 35 U.S.C. § 122(b)(2)(B)(iii) and 37 CFR 1.213(c) is accepted as having been unintentionally delayed.

It is noted that petitioner submitted a petition fee of $1,370 rather than the $750 petition fee required under 37 CFR 1.17(m) for a small entity. Accordingly, the $620 overpaid is being credit to counsel's deposit account.

The previous Request and Certification under 35 U.S.C. § 122(b)(2)(B)(i) has been rescinded. A Notice Regarding Rescission of Nonpublication Request which sets forth the projected publication date of May 3, 2007 accompanies this decision on petition.

Any inquiries concerning this decision may be directed to the undersigned at (571) 272-3204.

This application is being referred to the Technology Center 3618.

Sherry D. Brinkley
Petitions Examiner
Office of Petitions

ATTACHMENT: Notice Regarding Rescission of Nonpublication Request

UNITED STATES PATENT AND TRADEMARK OFFICE

UNITED STATES DEPARTMENT OF COMMERCE
United States Patent and Trademark Office
Address: COMMISSIONER FOR PATENTS
P.O. Box 1450
Alexandria, Virginia 22313-1450
www.uspto.gov

APPLICATION NUMBER	FILING/RECEIPT DATE	FIRST NAMED APPLICANT	ATTY. DOCKET NO.
10/857,528	06/01/2004	Robert Musselman	20032008.09

CONFIRMATION NO. 3495

SWARTZ & WILSON, P.L.C.
SUITE 200
908 COURT STREET
SAGINAW, MI 48602

Date Mailed: 01/23/2007

Communication Regarding Rescission Of Nonpublication Request and/or Notice of Foreign Filing

Applicant's rescission of the previously-filed nonpublication request and/or notice of foreign filing is acknowledged. The paper has been reflected in the Patent and Trademark Office's (USPTO's) computer records so that the earliest possible projected publication date can be assigned.

The projected publication date is 05/03/2007.

If applicant rescinded the nonpublication request before or on the date of "foreign filing,"[1] then no notice of foreign filing is required.

If applicant foreign filed the application after filing the above application and before filing the rescission, and the rescission did not also include a notice of foreign filing, then a notice of foreign filing (not merely a rescission) is required to be filed within 45 days of the date of foreign filing. See 35 U.S.C. § 122(b)(2)(B)(iii), and Clarification of the United States Patent and Trademark Office's Interpretation of the Provisions of 35 U.S.C. § 122(b)(2)(B)(ii)-(iv), 1272 Off. Gaz. Pat. Office 22 (July 1, 2003).

If a notice of foreign filing is required and is not filed within 45 days of the date of foreign filing, then the application becomes abandoned pursuant to 35 U.S.C. § 122(b)(2)(B)(iii). In this situation, applicant should either file a petition to revive or notify the Office that the application is abandoned. See 37 CFR 1.137(f). Any such petition to revive will be forwarded to the Office of Petitions for a decision. Note that the filing of the petition will not operate to stay any period of reply that may be running against the application.

Questions regarding petitions to revive should be directed to the Office of Petitions at (571) 272-3282. Questions regarding publications of patent applications should be directed to the patent application publication hotline at (703) 605-4283 or by e-mail pgpub@uspto.gov.

[1] Note, for purpose of this notice, that "foreign filing" means "filing an application directed to the same invention in another country, or under a multilateral international agreement, that requires publication of applications 18 months after filing".

UNITED STATES PATENT AND TRADEMARK OFFICE

UNITED STATES DEPARTMENT OF COMMERCE
United States Patent and Trademark Office
Address: COMMISSIONER FOR PATENTS
P.O. Box 1450
Alexandria, Virginia 22313-1450
www.uspto.gov

APPL NO.	FILING OR 371 (c) DATE	ART UNIT	FIL FEE REC'D	ATTY.DOCKET NO	DRAWINGS	TOT CLMS	IND CLMS
10/857,532	05/27/2004	2182	942	SNDK.377US0	9	18	5

CONFIRMATION NO. 3448

CORRECTED FILING RECEIPT

OC000000013863833

36257
PARSONS HSUE & DE RUNTZ LLP
655 MONTGOMERY STREET
SUITE 1800
SAN FRANCISCO, CA 94111

Date Mailed: 09/23/2004

Receipt is acknowledged of this regular Patent Application. It will be considered in its order and you will be notified as to the results of the examination. Be sure to provide the U.S. APPLICATION NUMBER, FILING DATE, NAME OF APPLICANT, and TITLE OF INVENTION when inquiring about this application. Fees transmitted by check or draft are subject to collection. Please verify the accuracy of the data presented on this receipt. **If an error is noted on this Filing Receipt, please write to the Office of Initial Patent Examination's Filing Receipt Corrections, facsimile number 703-746-9195. Please provide a copy of this Filing Receipt with the changes noted thereon. If you received a "Notice to File Missing Parts" for this application, please submit any corrections to this Filing Receipt with your reply to the Notice. When the USPTO processes the reply to the Notice, the USPTO will generate another Filing Receipt incorporating the requested corrections (if appropriate).**

Applicant(s)

Peter Smith, Residence Not Provided;
Sergey Gorobets, Residence Not Provided;

Power of Attorney:

Gerald Parsons--24486

Domestic Priority data as claimed by applicant

Foreign Applications

If Required, Foreign Filing License Granted: 07/29/2004

The number of your priority application, to be used for filing abroad under the Paris Convention is,
US10/857,532

Projected Publication Date: To Be Determined - pending completion of Missing Parts

Non-Publication Request: No

Early Publication Request: No

Title

Configurable ready/busy control

Preliminary Class

710

LICENSE FOR FOREIGN FILING UNDER
Title 35, United States Code, Section 184
Title 37, Code of Federal Regulations, 5.11 & 5.15

GRANTED

The applicant has been granted a license under 35 U.S.C. 184, if the phrase "IF REQUIRED, FOREIGN FILING LICENSE GRANTED" followed by a date appears on this form. Such licenses are issued in all applications where the conditions for issuance of a license have been met, regardless of whether or not a license may be required as set forth in 37 CFR 5.15. The scope and limitations of this license are set forth in 37 CFR 5.15(a) unless an earlier license has been issued under 37 CFR 5.15(b). The license is subject to revocation upon written notification. The date indicated is the effective date of the license, unless an earlier license of similar scope has been granted under 37 CFR 5.13 or 5.14.

This license is to be retained by the licensee and may be used at any time on or after the effective date thereof unless it is revoked. This license is automatically transferred to any related applications(s) filed under 37 CFR 1.53(d). This license is not retroactive.

The grant of a license does not in any way lessen the responsibility of a licensee for the security of the subject matter as imposed by any Government contract or the provisions of existing laws relating to espionage and the national security or the export of technical data. Licensees should apprise themselves of current regulations especially with respect to certain countries, of other agencies, particularly the Office of Defense Trade Controls, Department of State (with respect to Arms, Munitions and Implements of War (22 CFR 121-128)); the Office of Export Administration, Department of Commerce (15 CFR 370.10 (j)); the Office of Foreign Assets Control, Department of Treasury (31 CFR Parts 500+) and the Department of Energy.

NOT GRANTED

No license under 35 U.S.C. 184 has been granted at this time, if the phrase "IF REQUIRED, FOREIGN FILING LICENSE GRANTED" DOES NOT appear on this form. Applicant may still petition for a license under 37 CFR 5.12, if a license is desired before the expiration of 6 months from the filing date of the application. If 6 months has lapsed from the filing date of this application and the licensee has not received any indication of a secrecy order under 35 U.S.C. 181, the licensee may foreign file the application pursuant to 37 CFR 5.15(b).

UNITED STATES PATENT AND TRADEMARK OFFICE

UNITED STATES DEPARTMENT OF COMMERCE
United States Patent and Trademark Office
Address: COMMISSIONER FOR PATENTS
P.O. Box 1450
Alexandria, Virginia 22313-1450
www.uspto.gov

THE WEBB LAW FIRM, P.C.
700 KOPPERS BUILDING
436 SEVENTH AVENUE
PITTSBURGH, PA 15219

Mail Date: 04/21/2010

Applicant	: Daniel L. Hartmann	: DECISION ON REQUEST FOR
Patent Number	: 7603814	: RECALCULATION of PATENT
Issue Date	: 10/20/2009	: TERM ADJUSTMENT IN VIEW
Appliction No	: 10/857,537	: OF WYETH AND NOTICE OF INTENT TO
Filed	: 05/28/2004	: ISSUE CERTIFICATE OF CORRECTION
		:

The Request for Recalculation is **GRANTED** to the extent indicated.

The patent term adjustment has been determined to be **1069** days. The USPTO will *sua sponte* issue a certificate of correction reflecting the amount of PTA days determined by the recalculation.

Prior to the issuance of the certificate of correction, the USPTO will afford patentee an opportunity to be heard and request reconsideration. Accordingly, patentee has **one month or thirty (30) days**, whichever is longer, to file a request for reconsideration of this patent term adjustment calculation. See 35 U.S.C. 154(b)(3)(B)(ii) and 37 CFR 1.322(a)(4). No extensions of time will be granted under 37 CFR 1.136.

Patentee should use document code PET.OP if electronically filing a request for reconsideration of this patent term adjustment calculation. The patentee must also include the information required by 37 CFR 1.705(b)(2) and the fee required by 37 CFR 1.18(e). If patentee does not file a timely request for reconsideration of this patent term adjustment calculation including the information required by 37 CFR 1.705(b)(2) and the fee required by 37 CFR 1.18(e), the USPTO will issue a certificate of correction reflecting the PTA determination noted above.

Patentee should be aware that in order to preserve the right to review in the United States District Court for the District of Columbia of the USPTO patent term adjustment determination, patentee must ensure that he or she also take the steps required under 35 U.S.C. 154(b)(4)(A) in a timely manner. Nothing in the request for recalculation should be construed as providing an alternative time frame for commencing a civil action under 35 U.S.C. 154(b)(4)(A).

Any questions concerning this decision should be directed to the Office of Patent Legal Administration at 571-272-7702.

UNITED STATES PATENT AND TRADEMARK OFFICE

Commissioner for Patents
United States Patent and Trademark Office
P.O. Box 1450
Alexandria, VA 22313-1450
www.uspto.gov

WOMBLE CARLYLE SANDRIDGE & RICE, PLLC
ATTN: PATENT DOCKETING 32ND FLOOR
P.O. BOX 7037
ATLANTA, GA 30357-0037

COPY MAILED
DEC 15 2006
OFFICE OF PETITIONS

In re Application of	:	
Craig Larson	:	
Application No. 10/857,550	:	DECISION ON PETITION
Filed: May 28, 2004	:	TO WITHDRAW
Attorney Docket No. V034 1010.1	:	FROM RECORD
	:	

This is a decision on the Request to Withdraw as attorney or agent of record under 37 C.F.R. § 1.36(b) filed September 18,2006.

The request is **APPROVED**.

A grantable request to withdraw as attorney/agent of record must be signed by every attorney/agent seeking to withdraw or contain a clear indication that one attorney is signing on behalf of another/others. A request to withdraw will not be approved unless at least 30 (thirty) days would remain between the date of approval and the later of the expiration date of a time to file a response or the expiration date of the maximum time period which can be extended under 37 C.F.R. § 1.136(a).

The request was signed by John Timar on behalf of all attorneys of record who are associated with customer No. 26158.

All attorneys/agents associated with the Customer Number 26158 have been withdrawn.

Applicant is reminded that there is no attorney of record at this time.

The request to change the correspondence of record is not acceptable as the requested correspondence address is not that of: (1) the first named signing inventor; or (2) an intervening assignee of the entire interest under 37 C.F.R 3.71. All future communications from the Office will be directed to the first named signing inventor at the first copied address below until otherwise properly notified by the applicant.

There are no pending office actions at the present time.

Telephone inquiries concerning this decision should be directed to April Wise at 571-272-1642.

April Wise
April M. Wise
Petitions Examiner
Office of Petitions

cc: CRAIG LARSON
1177 TURNER ROAD
JASPER, GA 30143

cc: DUANE MORRIS, LLP
1180 WEST PEACHTREE STREET
SUITE 700
ATLANTA, GA 30309-3448

UNITED STATES PATENT AND TRADEMARK OFFICE

UNITED STATES DEPARTMENT OF COMMERCE
United States Patent and Trademark Office
Address: COMMISSIONER FOR PATENTS
P.O. Box 1450
Alexandria, Virginia 22313-1450
www.uspto.gov

APPLICATION NUMBER	FILING OR 371 (c) DATE	FIRST NAMED APPLICANT	ATTY. DOCKET NO./TITLE
10/857,550	05/28/2004	Craig Larson	043217.002

CONFIRMATION NO. 3097

OC000000021560860

OC000000021560860

25461
SMITH, GAMBRELL & RUSSELL
SUITE 3100, PROMENADE II
1230 PEACHTREE STREET, N.E.
ATLANTA, GA 30307-3592

Date Mailed: 12/11/2006

NOTICE REGARDING CHANGE OF POWER OF ATTORNEY

This is in response to the Power of Attorney filed 11/29/2004.

- The Power of Attorney to you in this application has been revoked by the applicant. Future correspondence will be mailed to the new address of record(37 CFR 1.33).

APRIL M WISE
OP (571) 272-1642

FORMER ATTORNEY/AGENT COPY

UNITED STATES PATENT AND TRADEMARK OFFICE

UNITED STATES DEPARTMENT OF COMMERCE
United States Patent and Trademark Office
Address: COMMISSIONER FOR PATENTS
P.O. Box 1450
Alexandria, Virginia 22313-1450
www.uspto.gov

APPLICATION NUMBER	FILING OR 371 (c) DATE	FIRST NAMED APPLICANT	ATTY. DOCKET NO./TITLE
10/857,550	05/28/2004	Craig Larson	V034 1010.1

CONFIRMATION NO. 3097

OC000000021561130

OC000000021561130

26158
WOMBLE CARLYLE SANDRIDGE & RICE, PLLC
ATTN: PATENT DOCKETING 32ND FLOOR
P.O. BOX 7037
ATLANTA, GA 30357-0037

Date Mailed: 12/11/2006

NOTICE REGARDING CHANGE OF POWER OF ATTORNEY

This is in response to the Power of Attorney filed 09/18/2006.

- The withdrawal as attorney in this application has been accepted. Future correspondence will be mailed to the new address of record. 37 CFR 1.33.

APRIL M WISE
OP (571) 272-1642

FORMER ATTORNEY/AGENT COPY

UNITED STATES PATENT AND TRADEMARK OFFICE

UNITED STATES DEPARTMENT OF COMMERCE
United States Patent and Trademark Office
Address: COMMISSIONER FOR PATENTS
P.O. Box 1450
Alexandria, Virginia 22313-1450
www.uspto.gov

APPLICATION NO.	FILING DATE	FIRST NAMED INVENTOR	ATTORNEY DOCKET NO.	CONFIRMATION NO.
10/857,561	05/28/2004	Mei Chen	200310057-1	3076

22879 7590 05/23/2008
HEWLETT PACKARD COMPANY
P O BOX 272400, 3404 E. HARMONY ROAD
INTELLECTUAL PROPERTY ADMINISTRATION
FORT COLLINS, CO 80527-2400

EXAMINER
CUNNINGHAM, GREGORY F

ART UNIT	PAPER NUMBER
2624	

NOTIFICATION DATE	DELIVERY MODE
05/23/2008	ELECTRONIC

Please find below and/or attached an Office communication concerning this application or proceeding.

The time period for reply, if any, is set in the attached communication.

Notice of the Office communication was sent electronically on above-indicated "Notification Date" to the following e-mail address(es):

JERRY.SHORMA@HP.COM
mkraft@hp.com
ipa.mail@hp.com

HEWLETT PACKARD COMPANY
P O BOX 272400, 3404 E. HARMONY ROAD
INTELLECTUAL PROPERTY ADMINISTRATION
FORT COLLINS CO 80527-2400

In re Application of	:	
MEI CHEN	:	
Application No. 10/857,561	:	**DECISION ON PETITION**
Filed: May 28, 2004	:	
Attorney Docket No. 200310057-1	:	

This is a decision on the Petition to Stop Improper Abandonment received in the United States Patent and Trademark (USPTO) on May 13, 2008, which is being treated as a Petition To Withdraw the Holding Of Abandonment for the above-identified application.

The petition is **GRANTED**.

The application was held abandoned for failure to timely pay the issue fee as required in the NOTICE OF ALLOWANCE AND FEE(S) DUE, mailed February 7, 2008, which set a three (3) month statutory period for reply.

Petitioner has demonstrated that the Part B – Fee(s) Transmittal, Transmittal Of Payment Of Issue Fee, and authorization to charge Deposit Account No. 08-2025 in the amount of $1,440 and $300 were timely facsimiled to the USPTO on March 31, 2008, and is in compliance with 37 CFR 1.8(b) in that (1) the United States Patent and Trademark Office was promptly informed of the previous timely submission, (2) a copy of the previously facsimiled correspondence with USPTO Auto-Reply Facsimile Transmission has been submitted, and (3) included a statement which attests to the previous timely facsimile.

In view of the above, the holding of abandonment is hereby withdrawn. Accordingly, the issue fee and publication fee will be accepted as timely, as March 31, 2008. As authorized, the issue fee in the amount of $1,440, and $300 for the publication fee were charged to Deposit Account No. 08-2025.

The application will be forwarded to the Patent Publication Branch to be promptly processed in to a patent. Per Patent Term Adjustment Rule 705, when the applicant receives the issue notification, a separate paper should be sent to the USPTO if applicant believes any adjustment to the Patent Term is warranted.

/Deborah Stephens/
Office of Data Management
703-308-9250

UNITED STATES PATENT AND TRADEMARK OFFICE

Commissioner for Patents
United States Patent and Trademark Office
P.O. Box 1450
Alexandria, VA 22313-1450
www.uspto.gov

DENNIS J. DUPRAY
% SHERIDAN AND ROSS, #1200
1560 BROADWAY
DENVER, CO 80202

COPY MAILED

JUL 2 0 2005

OFFICE OF PETITIONS

In re Application of	:	
Dennis J. Dupray et al	:	
Application No. 10/857,565	:	ON PETITION
Filed: May 28, 2004	:	
Attorney Docket No. 3367-8-CON	:	

This is a decision on the petition under 37 CFR 1.137(b), filed April 29, 2005, to revive the above-identified application.

The petition is **DISMISSED**.

Any request for reconsideration of this decision must be submitted within TWO (2) MONTHS from the mail date of this decision. Extensions of time under 37 CFR 1.136(a) are permitted. The reconsideration request should include a cover letter entitled "Renewed Petition under 37 CFR 1.137(b)." No additional fee is required with any renewed petition. Petitioner is advised that this is **not** a final agency action decision.

A grantable petition to revive an abandoned application under 37 CFR 1.137(b) must be accompanied by: (1) the required reply (unless previously filed), which may met by the filing of a continuing application in a nonprovisional application abandoned for failure to prosecute, but must be the payment of the issue fee or any outstanding balance thereof in an application or patent, abandoned or lapsed for failure to pay the issue fee or any portion thereof; (2) the petition fee as set forth in 37 CFR 1.17(m); (3) a statement that the entire delay in filing the required reply from the due date for the reply until the filing of a grantable petition pursuant to 37 CFR 1.137(b) was unintentional; and (4) any terminal disclaimer (and fee as set forth in 37 CFR 1.20(d)).

All the requirements being met. However, the petition lacks the signature of the first named inventor. 37 CFR 1.33(b) states that amendments and other papers, except for written assertions pursuant to § 1.27 (c)(2)(ii) of this part, filed in the application must be signed by:

> (1) a registered attorney or agent not of record who acts in a representative capacity under provisions of § 1.34(b);
> (2) a registered attorney or agent not of record who acts in a representative capacity under the provisions of § 1.34(a);

(3) **all of the applicants** (§ 1.41(b)) for patent, unless there is an assignee of the entire interest and such assignee has taken action in the application in accordance with § 3.71 of this chapter.

Further correspondence with respect to this matter should be addressed as follows:

By mail: Mail Stop PETITIONS
Commissioner for Patents
Post Office Box 1450
Alexandria, VA 22313-1450

By hand: Customer Service Window
Randolph Building
401 Dulany Street
Alexandria, VA 22314

By fax: (571) 273-8300
ATTN: Office of Petitions

The statement of unintentional delay presented in the petition does not comply with the current rule. Effective December 1, 1997, 37 C.F.R. §1.137 (b)(3) requires a statement that "the entire delay in filing the required reply from the due date for the reply until the filing of a grantable petition pursuant to 37 C.F.R. §1.137(b) was unintentional" be submitted. However, the statement presented will be accepted and construed as meaning that "the entire delay in filing the required reply from the due date for the reply until the filing of a grantable petition pursuant to 37 C.F.R. §1.137(b) was unintentional." If this is an incorrect interpretation in view of the rules, petitioner is required to provide a statement to that effect.

Telephone inquiries concerning this decision should be directed to Wan Laymon at (571) 272-3220.

Wan Laymon

Wan Laymon
Petitions Examiner
Office of Petitions
Office of the Deputy Commissioner
for Patent Examination Policy

UNITED STATES PATENT AND TRADEMARK OFFICE

Commissioner for Patents
United States Patent and Trademark Office
P.O. Box 1450
Alexandria, VA 22313-1450
www.uspto.gov

DENNIS J. DUPRAY
% SHERIDAN AND ROSS
#1200
1560 BROADWAY
DENVER, CO 80202

COPY MAILED

OCT 28 2005

OFFICE OF PETITIONS

In re Application of	:	
Dennis J. Dupray et al	:	
Application No. 10/857,565	:	ON PETITION
Filed: May 28, 2004	:	
Attorney Docket No. 3367-8-CON	:	

This is a decision on the renewed petition under 37 CFR 1.137(b), filed October 3, 2005, to revive the above-identified application.

The petition is **GRANTED**.

Telephone inquiries concerning this decision should be directed to Wan Laymon at (571) 272-3220.

This matter is being referred to the Office of Initial Patent Examination for preexamination processing.

Wan Laymon
Petitions Examiner
Office of Petitions

UNITED STATES PATENT AND TRADEMARK OFFICE

Commissioner for Patents
United States Patent and Trademark Office
P.O. Box 1450
Alexandria, VA 22313-1450
www.uspto.gov

TRASK BRITT
P.O. BOX 2550
SALT LAKE CITY UT 84110

COPY MAILED

JAN 2 7 2005

OFFICE OF PETITIONS

In re Application of :
Chen, et al. :
Application No. 10/857,609 :
Filed: May 28, 2004 :
Attorney Docket No. **3139-6459.1US (ALZ5040NP/** :

ON PETITION

This is a decision on the petition under 37 CFR 1.78(a)(6) to accept the unintentionally delayed claim under 35 U.S.C §119(e) for the benefit of priority of the prior-filed provisional application set forth in the amendment filed concurrently with the instant petition.

The petition under 37 CFR 1.78(a)(6) is **GRANTED**.

A petition for acceptance of a claim for late priority under 37 CFR 1.78(a)(6) is only applicable to those applications filed on, or after, November 29, 2000. Further, the petition is appropriate only after the expiration of the period specified in 37 CFR 1.78(a)(5)(ii). In addition, the petition under 37 CFR 1.78(a)(6) must be accompanied by:

1. the reference required by 35 U.S.C § 119(e) and paragraph (a)(5) of this section to the prior-filed provisional application, unless previously submitted.

2. the surcharge set forth in 1.17(t), and

3. a statement that the entire delay between the date the claim was due under paragraph (a)(5)(ii) of this section and the date the claim was filed was unintentional.

The instant pending application was filed on May 28, 2004, and was pending at the time of the filing of the instant petition. A reference to the prior-filed provisional application has been included in an amendment to the first page of the specification, as required by 37 CFR 1.78(a)(5)(i).

The instant nonprovisional application was filed after November 29, 2000, and the claim herein for the benefit of priority to the prior-filed provisional application is submitted after the expiration of the period specified in 37 CFR 1.78(a)(5)(ii). Also, the reference to the prior-filed application was submitted during the pendency of the instant nonprovisional application for which the claim for benefit of priority is sought. See 35 U.S.C. § 119(e). Accordingly, having found that the instant petition for acceptance of an unintentionally delayed claim for benefit of priority under 35 U.S.C. § 119(e) to the prior-filed provisional application satisfies the conditions of 37 CFR 1.78(a)(6), the petition is granted.

The granting of the petition to accept the delayed benefit claim to the prior-filed application under 37 CFR 1.78(a)(6) should not be construed as meaning the instant application is entitled to the benefit of the prior-filed application. In order for the instant application to be entitled to the benefit of the prior-filed application, all other requirements under 35 U.S.C. § 119(e) must be met. Similarly, the fact that the corrected Filing Receipt accompanying this decision on petition includes the prior-filed application should not be construed as meaning that applicant is entitled to the claim for benefit of priority to the prior-filed application noted thereon. Accordingly, the examiner will, in due course, consider this benefit claim and determine whether the instant application is entitled to the benefit of the earlier filing date.

A corrected filing receipt, which includes the priority claim to the prior-filed provisional application, accompanied this decision on petition.

This matter is being referred to Technology Center1600, Art Unit 1615, for appropriate action on the amendment filed October 27, 2004, including consideration by the examiner of applicant's entitlement to claim benefit of priority under 35 U.S.C. § 119(e) to the prior-filed provisional application.

Any inquiries concerning this decision may be directed to Kenya A. McLaughlin, Petitions Attorney, at (571)272-3222.

Frances Hicks

Frances Hicks
Petitions Examiner
Office of Petitions

Enclosure: Corrected Filing Receipt

UNITED STATES PATENT AND TRADEMARK OFFICE

COMMISSIONER FOR PATENTS
UNITED STATES PATENT AND TRADEMARK OFFICE
P.O. BOX 1450
ALEXANDRIA, VA 22313-1450
www.uspto.gov

Paper No.

ROTHWELL, FIGG,
ERNST & MANBECK, P.C.
1425 K STREET, N.W.
SUITE 800
WASHINGTON DC 20005

MAILED

APR 24 2009

OFFICE OF PETITIONS

In re Patent No. 7,378,569 :
Tu et al :
Issue Date: May 27, 2008 :
Application No. 10/857,613 : LETTER REGARDING
Filed: June 1, 2004 : PATENT TERM ADJUSTMENT
Attorney Docket No. 3574-0112 :

This is in response to the "GOOD FAITH AND CANDOR COMMUNICATION," filed September 24, 2008. Pursuant to their duty of good faith and candor to the Office, patentees disclose that the total patent term adjustment should be one hundred fifty (150) days.

The request for review of the patent term adjustment is **GRANTED to the extent indicated herein**.

The patent term adjustment indicated in the patent is to be corrected by issuance of a certificate of correction showing a revised Patent Term Adjustment of one hundred thirty-four **(134)** days.

On May 27, 2008, the application matured into U.S. Patent No. 7,378,569, with a revised patent term adjustment of 164 days. In response, patentees filed the instant comment. Patentees disclose that a reduction of 30 days should have been given for applicant delay in their filing dated October 5, 2007. In addition, an adjustment of 16 days should have been given for Office delay in mailing a Notice of Allowance in response.

Patentees are correct. A review of the record confirms that the request for continued examination (RCE) filed October 5, 2007 was not considered in the calculation of patent term adjustment. Applicants took three months and 30 days to file the RCE in response to the final rejection mailed June 5, 2007. Thus, pursuant to §1.704(b), a period of reduction of 30 days should have been entered.

Moreover, the Office did not mail a Notice of Allowance in response to the RCE until October 5, 2007, four months and 16 days later. Thus, pursuant to §§ 1.702(a)(2) and 1.703(a)(2), a period of reduction of 16 days should have been entered.

In addition, a review of the record reveals a further basis for entry of a period of reduction. Pursuant to § 1.704(c)(8), a period of reduction of 16 days should have been entered for the Information Disclosure Statement (IDS) filed December 7, 2006.

37 CFR 1.704(c)(8) states that circumstances that constitute a failure of the applicant to engage in reasonable efforts to conclude processing or examination of an application also include the following circumstances, which will result in the following reduction of the period of adjustment set forth in § 1.703 to the extent that the periods are not overlapping:

> submission of a supplemental reply or other paper, other than a supplemental reply or other paper expressly requested by the examiner, after a reply has been filed, in which case the period of adjustment set forth in § 1.703 shall be reduced by the number of days, if any, beginning on the day after the date the initial reply was filed and ending on the date that the supplemental reply or other such paper was filed.

On November 21, 2006, an amendment in reply to the Office action mailed on September 22, 2006, was filed. On December 7, 2006, 16 days after the filing of the amendment filed on November 21, 2006, an IDS was filed. The IDS did not include a statement in accordance with 37 CFR 1.704(d). Further, the IDS was not expressly requested by the examiner within the meaning of 37 CFR 1.704(c)(8).

Accordingly, the IDS filed on December 7, 2006 is considered a failure to engage in reasonable efforts to conclude processing

or examination of an application. The patent term adjustment will therefore be reduced by an additional 16 days.
In view thereof, the patent should have issued with a revised patent term adjustment of one hundred thirty-four (134) days (164 + 16 of Office delay reduced by 46 (30 + 16) days of applicant delay).

As this letter was submitted as an advisement to the Office of an error in Patentee's favor, the Office will not assess the $200.00 fee under 37 CFR 1.18(e). The Office thanks patentee for their good faith and candor in bringing this to the attention of the Office.

The application file is being forwarded to the Certificates of Correction Branch for issuance of a certificate of correction in order to rectify this error. The Office will issue a certificate of correction indicating that the term of the above-identified patent is extended or adjusted by one hundred thirty-four **(134)** days.

Telephone inquiries specific to this matter should be directed to the undersigned at (571) 272-3219.

Nancy Johnson
Senior Petitions Attorney
Office of Petitions

Enclosure: DRAFT Certificate of Correction

UNITED STATES PATENT AND TRADEMARK OFFICE

CERTIFICATE OF CORRECTION

PATENT : 7,378,569 B2

DATED : **May 27, 2008** **DRAFT**

INVENTOR(S) : Tu et al.

It is certified that error appears in the above-identified patent and that said Letters Patent is hereby corrected as shown below:

On the cover page,

[*] Notice: Subject to any disclaimer, the term of this patent is extended or adjusted under 35 USC 154(b) by 164 days

Delete the phrase "by 164 days" and insert – by 134 days--

UNITED STATES PATENT AND TRADEMARK OFFICE

Commissioner for Patents
United States Patent and Trademark Office
P.O. Box 1450
Alexandria, VA 22313-1450
www.uspto.gov

DICKSTEIN SHAPIRO LLP
1177 AVENUE OF THE AMERICAS 6TH AVENUE
NEW YORK NY 10036-2714

COPY MAILED

NOV 29 2007

OFFICE OF PETITIONS

DECISION ON PETITION

In re Application of :
KUNEMUND, Thomas :
Application No. 10/857,616 :
Filed: May 27, 2004 :
Attorney Docket No. **E0196.0009** :

This is a decision on the petition under the unintentional provisions of 37 CFR 1.137(b), filed April 19, 2007, to revive the above-identified application.

The petition is **GRANTED.**

The application became abandoned for failure to timely file a reply within the meaning of 37 CFR 1.113 to the final Office action of September 27, 2006. The proposed reply required for consideration of a petition to revive must be a Notice of Appeal (and appeal fee required by 37 CFR 41.20(b)(2), an amendment that *prima facie* places the application in condition for allowance, a Request for Continued Examination and submission (37 CFR 1.114), or the filing of a continuing application under 37 CFR 1.53(b). See MPEP 711.03(c)(III)(A)(2). A three month extension of time pursuant to the provisions of 37 CFR 1.136(a) was obtained. Accordingly, the date of abandonment of this application is March 28, 2007.

The petition satisfies the requirements of 37 CFR 1.137(b) in that petitioner has supplied (1) the reply in the form of a Request for Continued Examination (RCE) and fee of $790, and the submission required by 37 CFR 1.114; (2) the petition fee of $1500; and (3) a proper statement of unintentional delay.

The petition is not signed by an attorney of record. Nevertheless, in accordance with 37 CFR 1.34, the signature of Mr. Brian M. McGuire appearing on the correspondence shall constitute a representation to the United States Patent and Trademark Office that he is authorized to represent that particular party on whose behalf he acts.

Telephone inquiries concerning this decision should be directed to Monica A. Graves at (571) 272-7253.

This application is being referred to Technology Center AU 2816 for processing of the RCE and for appropriate action by the Examiner in the normal course of business on the amendment submitted in accordance with 37 CFR 1.114.

Sherry D. Brinkley

Sherry D. Brinkley
Petitions Examiner
Office of Petitions

UNITED STATES PATENT AND TRADEMARK OFFICE

Commissioner for Patents
United States Patent and Trademark Office
P.O. Box 1450
Alexandria, VA 22313-1450
www.uspto.gov

RYAN KROMHOLZ & MANION, S.C.
POST OFFICE BOX 26618
MILWAUKEE, WI 53226

COPY MAILED

MAR 1 4 2005

OFFICE OF PETITIONS

In re Application of	:
Bek et al.	:
Application No. 10/857,632	: DECISION ON PETITION
Filed: May 28, 2004	: UNDER 37 CFR 1.78(a)(3)
Attorney Docket No. 9222.18601	:

This is a decision on the petition under 37 CFR 1.78(a)(3), filed January 31, 2005, to accept an unintentionally delayed claim under 35 U.S.C. § 120 for the benefit of priority to prior-filed nonprovisional Application No. 09/955,915, filed September 19, 2001.

The petition is **DISMISSED**.

A petition for acceptance of a claim for late priority under 37 CFR 1.78(a)(3) is only applicable to those applications filed on or after November 29, 2000. Further, the petition is appropriate only after the expiration of the period specified in 37 CFR 1.78(a)(2)(ii). In addition, the petition under 37 CFR 1.78(a)(3) must be accompanied by:

(1) the reference required by 35 U.S.C. § 120 and 37 CFR 1.78(a)(2)(i) of the prior-filed application(s), unless previously submitted;
(2) the surcharge set forth in § 1.17(t); and
(3) a statement that the entire delay between the date the claim was due under 37 CFR 1.78(a)(2)(ii) and the date the claim was filed was unintentional. The Commissioner may require additional information where there is a question whether the delay was unintentional.

The instant petition does not comply with item (1) above.

The amendment submitted concurrently with the instant petition as drafted is unacceptable and, therefore, is not considered a proper reference under 37 CFR 1.78(a)(2)(i). In this regard, the amendment is physically part of the instant petition and, as such, does not comply with 37 CFR 1.121, 1.52, or 1.4(c). Note that 37 CFR 1.121 states that amendments are made by filing a paper, in compliance with § 1.52, directing that specified amendments be made. The pertinent section of 37 CFR 1.52 states that the claim, (in this case, the claim for priority), must commence on a separate physical sheet. 37 CFR 1.4(c) states that each distinct subject, inquiry or order must be contained in a separate paper since different matters may be considered by different branches of the United States Patent and Trademark Office.

Accordingly, before the petition under 37 CFR 1.78(a)(3) can be granted, a substitute amendment[1] commencing on a separate sheet of paper, along with a renewed petition under 37 CFR 1.78(a)(3), is required.

Further correspondence with respect to this matter should be addressed as follows:

By mail: Mail Stop PETITIONS
Commissioner for Patents
Post Office Box 1450
Alexandria, VA 22313-1450

By hand: Customer Window located at:

U.S. Patent and Trademark Office
Customer Service Window Randolph Building
401 Dulany Street
Alexandria, VA 22314

By fax: (703) 872-9306
ATTN: Office of Petitions

Any questions concerning this matter may be directed to Paralegal Liana Chase at (571) 272-3206.

Frances Hicks

Frances Hicks
Petitions Examiner
Office of Petitions
Office of the Deputy Commissioner
for Patent Examination Policy

[1] *Note* 37 CFR 1.121

UNITED STATES PATENT AND TRADEMARK OFFICE

Commissioner for Patents
United States Patent and Trademark Office
P.O. Box 1450
Alexandria, VA 22313-1450
www.uspto.gov

RYAN KROMHOLZ & MANION, S.C.
POST OFFICE BOX 26618
MILWAUKEE, WI 53226

COPY MAILED
APR 19 2005
OFFICE OF PETITIONS

In re Application of	:	
Bek et al.	:	
Application No. 10/857,632	:	DECISION GRANTING PETITION
Filed: May 28, 2004	:	UNDER 37 CFR 1.78(a)(3)
Attorney Docket No. 9222.18601	:	

This is a decision on the renewed petition under 37 CFR 1.78(a)(3), filed March 28, 2005, to accept an unintentionally delayed claim under 35 U.S.C. § 120 for the benefit of priority to prior-filed nonprovisional Application No. 09/955,915, filed September 19, 2001, as set forth in the amendment filed concurrently with the instant petition.

The petition is **GRANTED**.

A petition for acceptance of a claim for late priority under 37 CFR 1.78(a)(3) is only applicable to those applications filed on or after November 29, 2000. Further, the petition is appropriate only after the expiration of the period specified in 37 CFR 1.78(a)(2)(ii). In addition, the petition under 37 CFR 1.78(a)(3) must be accompanied by:

(1) the reference required by 35 U.S.C. § 120 and 37 CFR 1.78(a)(2)(i) of the prior-filed application, unless previously submitted;
(2) the surcharge set forth in § 1.17(t); and
(3) a statement that the entire delay between the date the claim was due under 37 CFR 1.78(a)(2)(ii) and the date the claim was filed was unintentional. The Commissioner may require additional information where there is a question whether the delay was unintentional.

The instant pending application was filed on May 28, 2004, and was pending at the time of filing of the instant petition. A reference to the above-noted, prior-filed nonprovisional application has been included in an amendment to the first sentence of the specification following the title, as required by 37 CFR 1.78(a)(2)(iii).

The instant nonprovisional application was filed after November 29, 2000, and the claim herein for the benefit of priority to the prior-filed nonprovisional application is submitted after expiration of the period specified in 37 CFR 1.78(a)(2)(ii). Also, the reference to the prior-filed nonprovisional application was submitted during the pendency of the instant nonprovisional application, for which the claim for benefit of priority is sought. *See* 35 U.S.C. § 120. Accordingly, having found that the instant petition for acceptance of an unintentionally delayed claim for the benefit of priority under 35 U.S.C. § 120 to the above-noted, prior-filed nonprovisional application satisfies the conditions of 37 CFR 1.78(a)(3), the petition is granted.

The granting of the petition to accept the delayed benefit claim to the prior-filed application under 37 CFR 1.78(a)(3) should not be construed as meaning that the instant application is entitled to the benefit of the prior-filed application. In order for the instant application to be entitled to the benefit of the prior-filed application, all other requirements under 35 U.S.C. § 120 and 37 CFR 1.78(a)(1) and (a)(2) must be met. Similarly, the fact that the corrected Filing Receipt accompanying this decision on petition includes the prior-filed application should not be construed as meaning that applicant is entitled to the claim for benefit of priority to the prior-filed application noted thereon. Accordingly, the examiner will, in due course, consider this benefit claim and determine whether the instant application is entitled to the benefit of the earlier filing date.

A corrected Filing Receipt, which includes the priority claim to the prior-filed nonprovisional application, accompanies this decision on petition.

Any inquiries concerning this decision may be directed to Paralegal Liana Chase at (571) 272-3282.

This matter is being referred to Technology Center Art Unit 3763 for appropriate action on the amendment filed March 28, 2005, including consideration by the examiner of applicant's entitlement to claim benefit of priority under 35 U.S.C. § 120 to the prior-filed nonprovisional application.

Frances Hicks

Frances Hicks
Petitions Examiner
Office of Petitions
Office of the Deputy Commissioner
for Patent Examination Policy

ATTACHMENT: Corrected Filing Receipt

UNITED STATES PATENT AND TRADEMARK OFFICE

UNITED STATES DEPARTMENT OF COMMERCE
United States Patent and Trademark Office
Address: COMMISSIONER FOR PATENTS
P.O. Box 1450
Alexandria, Virginia 22313-1450
www.uspto.gov

SHERIDAN ROSS PC
1560 BROADWAY
SUITE 1200
DENVER, CO 80202

Mail Date: 04/21/2010

Applicant	: George N. Cox III	: DECISION ON REQUEST FOR
Patent Number	: 7629314	: RECALCULATION of PATENT
Issue Date	: 12/08/2009	: TERM ADJUSTMENT IN VIEW
Appliction No	: 10/857,644	: OF WYETH AND NOTICE OF INTENT TO
Filed	: 05/27/2004	: ISSUE CERTIFICATE OF CORRECTION
		:

The Request for Recalculation is **GRANTED** to the extent indicated.

The patent term adjustment has been determined to be **532** days. The USPTO will *sua sponte* issue a certificate of correction reflecting the amount of PTA days determined by the recalculation.

Prior to the issuance of the certificate of correction, the USPTO will afford patentee an opportunity to be heard and request reconsideration. Accordingly, patentee has **one month or thirty (30) days**, whichever is longer, to file a request for reconsideration of this patent term adjustment calculation. See 35 U.S.C. 154(b)(3)(B)(ii) and 37 CFR 1.322(a)(4). No extensions of time will be granted under 37 CFR 1.136.

Patentee should use document code PET.OP if electronically filing a request for reconsideration of this patent term adjustment calculation. The patentee must also include the information required by 37 CFR 1.705(b)(2) and the fee required by 37 CFR 1.18(e). If patentee does not file a timely request for reconsideration of this patent term adjustment calculation including the information required by 37 CFR 1.705(b)(2) and the fee required by 37 CFR 1.18(e), the USPTO will issue a certificate of correction reflecting the PTA determination noted above.

Patentee should be aware that in order to preserve the right to review in the United States District Court for the District of Columbia of the USPTO patent term adjustment determination, patentee must ensure that he or she also take the steps required under 35 U.S.C. 154(b)(4)(A) in a timely manner. Nothing in the request for recalculation should be construed as providing an alternative time frame for commencing a civil action under 35 U.S.C. 154(b)(4)(A).

Any questions concerning this decision should be directed to the Office of Patent Legal Administration at 571-272-7702.

UNITED STATES PATENT AND TRADEMARK OFFICE

Commissioner for Patents
United States Patent and Trademark Office
P.O. Box 1450
Alexandria, VA 22313-1450
www.uspto.gov

COPY MAILED
AUG 24 2006
OFFICE OF PETITIONS

KENNETH R SCHAEFFER ESQ
ATTORNEY AT LAW
25 DICKINSON RD
BASKING RIDGE NJ 07920

In re Application of Thomas D. Merritt Application No. 10/857,648 Filed: May 28, 2004 Attorney Docket No. IS-002	: : : : :	DECISION ON PETITION

This is a decision on the petition to revive the above-identified application under 37 CFR 1.137(b), filed February 3, 2006.

The petition is **DISMISSED**.

Any request for reconsideration of this decision must be submitted within TWO (2) MONTHS from the mail date of this decision. Extensions of time under 37 CFR 1.136(a) are permitted. The reconsideration request should include a cover letter entitled "Renewed Petition Under 37 CFR 1.137(b)." This is **not** a final agency decision within the meaning of 5 USC 704.

The above-identified application became abandoned for failure to timely pay the issue fee and file drawings in response to the Notice of Allowance and Notice of Allowability, both mailed on July 8, 2005. These Notice set a statutory period for reply of three months. No extensions of time under 37 CFR 1.136(a) were available. No issue fee and drawings having been received, the above-identified application became abandoned on October 9, 2005. A Notice of Abandonment was mailed on November 30, 2005.

A grantable petition under 37 CFR 1.137(b) must be accompanied by: (1) the required reply, unless previously filed; (2) the petition fee as set forth in 37 CFR 1.17(m); (3) a statement that the entire delay in filing the required reply from the due date for the reply until the filing of a grantable petition pursuant to 37 CFR 1.137(b) was unintentional; and (4) any terminal disclaimer (and fee as set forth in 37 CFR 1.20(d)) required by 37 CFR 1.137(d).

The instant petition lacks item (1). Petitioner did not submit the issue and publication fees in full. The issue fee is $700; the publication fee is $300. Petitioner submitted $650 for both. No authorization to charge the fees to a deposit account is found in the file. Accordingly, on renewed petition, petitioner must submit the balance of $350.

The file does not indicate a change of correspondence address has been submitted, although the address given on the petition differs from the address of record. If appropriate, a change of address should be filed in accordance with MPEP 601.03. A courtesy copy of this decision is being mailed to the address given on the petition; however, the Office will mail all future correspondence solely to the address of record.

Further correspondence concerning this application should be addressed as follows:

By mail: Mail Stop Petitions
Commissioner for Patents
P.O. Box 1450
Alexandria VA 22313-1450

By FAX: (571) 273-8300
Attn: Office of Petitions

Telephone inquiries concerning this decision should be directed to the undersigned at (571)272-3207.

Cliff Congo
Petitions Attorney
Office of Petitions

cc: Kenneth R. Schaeffer
9691 Arbor Oaks Ct # 208
Boca Raton FL 33428

UNITED STATES PATENT AND TRADEMARK OFFICE

Commissioner for Patents
United States Patent and Trademark Office
P.O. Box 1450
Alexandria, VA 22313-1450
www.uspto.gov

COPY MAILED

SEP 14 2006

OFFICE OF PETITIONS

KENNETH R SCHAEFFER ESQ
ATTORNEY AT LAW
104 BAY POINT HARBOUR
POINT PLEASANT NJ 08742

In re Application of	:	
Thomas D. Merritt	:	
Application No. 10/857,648	:	DECISION ON PETITION
Filed: May 28, 2004	:	
Attorney Docket No. IS-002	:	

This is a decision on the renewed petition to revive the above-identified application under 37 CFR 1.137(b), filed September 1, 2006.

The petition is **GRANTED**.

The above-identified application became abandoned for failure to timely pay the issue fee and file drawings in response to the Notice of Allowance and Notice of Allowability, both mailed on July 8, 2005. These Notice set a statutory period for reply of three months. No extensions of time under 37 CFR 1.136(a) were available. No issue fee and drawings having been received, the above-identified application became abandoned on October 9, 2005. A Notice of Abandonment was mailed on November 30, 2005. Applicant filed a petition to revive on February 3, 2006. However, because applicant did not pay the issue and publication fees in full, the petition was dismissed in a decision mailed on August 24, 2006.

With the instant petition, applicant paid the balance of the issue and publication fees due. The additional requirements for a grantable petition were satisfied in the earlier petition.

The Change of Correspondence Address, submitted with the instant petition, has been entered. Future correspondence concerning this application will be mailed to the above address of record.

The matter is being forwarded to the Office of Patent Publication for processing into a patent.

Telephone inquiries concerning this decision should be directed to the undersigned at (571)272-3207.

Cliff Congo
Petitions Attorney
Office of Petitions

UNITED STATES PATENT AND TRADEMARK OFFICE

Commissioner for Patents
United States Patent and Trademark Office
P.O. Box 1450
Alexandria, VA 22313-1450
www.uspto.gov

IMMUNEX CORPORATION
LAW DEPARTMENT
1201 AMGEN COURT WEST
SEATTLE WA 98119

COPY MAILED

SEP 0 2 2008

OFFICE OF PETITIONS

In re Patent No. 7,234,237 :
Issued: June 26, 2007 :
Application No. 10/857,664 : ON PETITION
Filed: May 28, 2004 :
Attorney Docket No. 2619-E :

This is a decision on the petition, filed April 8, 2008, which is being treated as a request under 37 CFR 3.81(b)[1] to correct the assignee's name on the Fee(s) Transmittal form PTOL-85(b) so that the Letters Patent will issue to the assignee.

The request is **DISMISSED**.

Petitioner states that the correct assignee's name is Immunex Corporation and that an incorrect assignee's name was included on the Part B - Fee(s) Transmittal form at the time of payment of the issue fee. Accordingly, petitioner requests a certificate of correction to indicate the correct assignee name.

37 CFR 3.81(b), effective June 25, 2004, reads:

> *After payment of the issue fee:* Any request for issuance of an application in the name of the assignee submitted after the date of payment of the issue fee, and any request for a patent to be corrected to state the name of the assignee, must state that the assignment was submitted for recordation as set forth in § 3.11 before issuance of the patent, and must include a request for a certificate of correction under § 1.323 of this chapter (accompanied by the fee set forth in § 1.20(a)) and the processing fee set forth in § 1.17(i) of this chapter.

The request under 37 CFR 3.81(b) was not accompanied by a request for a certificate of correction (and fee) as required by 3.81(b). *See also* MPEP 1481.01. As petitioner has failed to comply with the provisions of 37 CFR 3.81(b), the request cannot be granted at this time.

A review of Office database assignment records reflects that an assignment to Immunex Corporation has been recorded. Therefore, upon submission of the required certificate of correction and fee, it would be appropriate for the Office to issue a certificate of correction to

[1] *See* MPEP 1309, subsection II and Official Gazette of June 22, 2004

correct the front page of the Letters Patent to reflect that Immunex Corporation was the assignee of record at the time of issuance of the application into a patent. *Note also* 35 U.S.C. § 152.

Accordingly, any request for reconsideration of this decision must include a request for a certificate of correction (and fee) which sets forth Immunex Corporation as the assignee. See, enclosed.

The fees required in connection with this matter are $130.00 for the request and $100.00 for the certificate. Petitioner to date has submitted $400.00. Petitioner may request to have the required $230.00 deducted from the previously submitted $400.00 and request a refund in the amount of $170.00.

Inquiries concerning this decision should be directed to the undersigned at (571) 272-3205.

Alesia M Brown
Petitions Attorney
Office of Petitions

PTO/SB/44 (09-07)
Approved for use through 08/31/2010. OMB 0651-0033
U.S. Patent and Trademark Office; U.S. DEPARTMENT OF COMMERCE
Under the Paperwork Reduction Act of 1995, no persons are required to respond to a collection of information unless it displays a valid OMB control number.
(Also Form PTO-1050)

UNITED STATES PATENT AND TRADEMARK OFFICE
CERTIFICATE OF CORRECTION

Page _____ of _____

PATENT NO. :

APPLICATION NO.:

ISSUE DATE :

INVENTOR(S) :

It is certified that an error appears or errors appear in the above-identified patent and that said Letters Patent is hereby corrected as shown below:

MAILING ADDRESS OF SENDER (Please do not use customer number below):

This collection of information is required by 37 CFR 1.322, 1.323, and 1.324. The information is required to obtain or retain a benefit by the public which is to file (and by the USPTO to process) an application. Confidentiality is governed by 35 U.S.C. 122 and 37 CFR 1.14. This collection is estimated to take 1.0 hour to complete, including gathering, preparing, and submitting the completed application form to the USPTO. Time will vary depending upon the individual case. Any comments on the amount of time you require to complete this form and/or suggestions for reducing this burden, should be sent to the Chief Information Officer, U.S. Patent and Trademark Office, U.S. Department of Commerce, P.O. Box 1450, Alexandria, VA 22313-1450. DO NOT SEND FEES OR COMPLETED FORMS TO THIS ADDRESS. **SEND TO: Attention Certificate of Corrections Branch, Commissioner for Patents, P.O. Box 1450, Alexandria, VA 22313-1450.**

If you need assistance in completing the form, call 1-800-PTO-9199 and select option 2.

Privacy Act Statement

The **Privacy Act of 1974 (P.L. 93-579)** requires that you be given certain information in connection with your submission of the attached form related to a patent application or patent. Accordingly, pursuant to the requirements of the Act, please be advised that: (1) the general authority for the collection of this information is 35 U.S.C. 2(b)(2); (2) furnishing of the information solicited is voluntary; and (3) the principal purpose for which the information is used by the U.S. Patent and Trademark Office is to process and/or examine your submission related to a patent application or patent. If you do not furnish the requested information, the U.S. Patent and Trademark Office may not be able to process and/or examine your submission, which may result in termination of proceedings or abandonment of the application or expiration of the patent.

The information provided by you in this form will be subject to the following routine uses:

1. The information on this form will be treated confidentially to the extent allowed under the Freedom of Information Act (5 U.S.C. 552) and the Privacy Act (5 U.S.C 552a). Records from this system of records may be disclosed to the Department of Justice to determine whether disclosure of these records is required by the Freedom of Information Act.
2. A record from this system of records may be disclosed, as a routine use, in the course of presenting evidence to a court, magistrate, or administrative tribunal, including disclosures to opposing counsel in the course of settlement negotiations.
3. A record in this system of records may be disclosed, as a routine use, to a Member of Congress submitting a request involving an individual, to whom the record pertains, when the individual has requested assistance from the Member with respect to the subject matter of the record.
4. A record in this system of records may be disclosed, as a routine use, to a contractor of the Agency having need for the information in order to perform a contract. Recipients of information shall be required to comply with the requirements of the Privacy Act of 1974, as amended, pursuant to 5 U.S.C. 552a(m).
5. A record related to an International Application filed under the Patent Cooperation Treaty in this system of records may be disclosed, as a routine use, to the International Bureau of the World Intellectual Property Organization, pursuant to the Patent Cooperation Treaty.
6. A record in this system of records may be disclosed, as a routine use, to another federal agency for purposes of National Security review (35 U.S.C. 181) and for review pursuant to the Atomic Energy Act (42 U.S.C. 218(c)).
7. A record from this system of records may be disclosed, as a routine use, to the Administrator, General Services, or his/her designee, during an inspection of records conducted by GSA as part of that agency's responsibility to recommend improvements in records management practices and programs, under authority of 44 U.S.C. 2904 and 2906. Such disclosure shall be made in accordance with the GSA regulations governing inspection of records for this purpose, and any other relevant (*i.e.*, GSA or Commerce) directive. Such disclosure shall not be used to make determinations about individuals.
8. A record from this system of records may be disclosed, as a routine use, to the public after either publication of the application pursuant to 35 U.S.C. 122(b) or issuance of a patent pursuant to 35 U.S.C. 151. Further, a record may be disclosed, subject to the limitations of 37 CFR 1.14, as a routine use, to the public if the record was filed in an application which became abandoned or in which the proceedings were terminated and which application is referenced by either a published application, an application open to public inspection or an issued patent.
9. A record from this system of records may be disclosed, as a routine use, to a Federal, State, or local law enforcement agency, if the USPTO becomes aware of a violation or potential violation of law or regulation.

UNITED STATES PATENT AND TRADEMARK OFFICE

COMMISSIONER FOR PATENTS
UNITED STATES PATENT AND TRADEMARK OFFICE
P.O. BOX 1450
ALEXANDRIA, VA 22313-1450
www.uspto.gov

IMMUNEX CORPORATION
LAW DEPARTMENT
1201 AMGEN COURT WEST
SEATTLE WA 98119

COPY MAILED
FEB 01 2010

In re Patent No. 7,235,238 :
Issued: June 26, 2007 :
Application No. 10/857,664 : ON PETITION
Filed: May 28, 2004 :
Attorney Docket No. 2619-E :

This is a decision on the petition, filed December 10, 2009, which is being treated as a request under 37 CFR 3.81(b)[1] to correct the assignee's name on the Fee(s) Transmittal form PTOL-85(b) so that the Letters Patent will issue to the assignee.

The request is **GRANTED**.

Petitioner states that the correct assignee's name is "IMMUNEX CORPORATION" and that the incorrect assignee's name was included on the Fee(s) Transmittal form PTOL-85(b) at the time of payment of the issue fee. Accordingly, petitioner requests that a certificate of correction be issued to reflect the correct assignee on the front page of the Letters Patent in the patent to be issued from the application.

37 CFR 3.81(b), effective June 25, 2004, reads:

> *After payment of the issue fee:* Any request for issuance of an application in the name of the assignee submitted after the date of payment of the issue fee, and any request for a patent to be corrected to state the name of the assignee, must state that the assignment was submitted for recordation as set forth in § 3.11 before issuance of the patent, and must include a request for a certificate of correction under § 1.323 of this chapter (accompanied by the fee set forth in § 1.20(a) and the processing fee set forth in § 1.17(i) of this chapter

The request was accompanied by a certificate of correction (and fee) as required by 3.81(b). Further, Office assignment records reflect that IMMUNEX CORPORATION is the assignee of record. Accordingly, as the request complies with the provisions of 37 CFR 3.81(b), it would be appropriate for a certificate of correction to be processed after issuance of this application into a patent.

---

[1] *See* MPEP 1309, subsection II and Official Gazette of June 22, 2004

Inquiries concerning this decision should be directed to the undersigned at (571) 272-3205. Any questions concerning the issuance of a certificate of correction should be directed to the Certificates of Correction Branch at (571) 272-4200.

This matter is being referred to the Certificates of Correction Branch for processing of a certificate of correction after issuance of this application into a patent..

Inquiries concerning this decision should be directed to the undersigned at (571) 272-3205.

/ALESIA M. BROWN/

Alesia M Brown
Petitions Attorney
Office of Petitions

UNITED STATES PATENT AND TRADEMARK OFFICE

Commissioner for Patents
United States Patent and Trademark Office
P.O. Box 1450
Alexandria, VA 22313-1450
www.uspto.gov

AUG 19 2005

Chin Chia Liu
275 E 6th Street #120
Tustin CA 92780

In re Application of	:	
Chin Chia Liu	:	
Serial No.: 10/857,680	:	DECISION ON PETITION
Filed: May 29, 2004	:	
For: Protective Ear Shield	:	

This is in response to applicants' petition filed May 30, 2005, to make the above-identified application special under the provisions of 37 CFR 1.102(c), based on the age of the applicant.

Applicant has satisfied the provisions set forth in M.P.E.P. 708.02, IV. Therefore the petition is **GRANTED**.

The application will be forwarded to the examiner for action on the merits commensurate with this decision.

Should there be any questions with regard to this letter please contact Frederick Schmidt by letter addressed to the Director, Technology Center 3700, P.O. Box 1450 Alexandria, VA 22313-1450, or by telephone at (571) 272-2975 or by facsimile transmission at (571) 273-8300.

Frederick R. Schmidt, Director
Technology Center 3700

UNITED STATES PATENT AND TRADEMARK OFFICE

Commissioner for Patents
United States Patent and Trademark Office
P.O. Box 1450
Alexandria, VA 22313-1450
www.uspto.gov

MICROSOFT CORPORATION
Attn: Patent Group Docketing
One Microsoft Way
Redmond, WA 98052-6399

COPY MAILED

AUG 1 2 2005

OFFICE OF PETITIONS

In re Application of
KEY, Peter B. *et al*
Application No.: 10/857,687
Filing Date: May 27, 2004
Docket No.: 149517.04
For: METHODS AND SYSTEMS FOR ALLEVIATING NETWORK CONGESTION

DECISION

ON PETITION UNDER

37 CFR 1.137(b)

This is a decision on the petition to revive under 37 CFR 1.137(b) filed on May 13, 2005.

The petition under 1.137(b) is hereby **GRANTED**.

The above-identified application became abandoned for failure to file a timely and proper reply to the Notice to File Corrected Application Papers ("Notice") mailed July 26, 2004. The Notice required replacement drawings in compliance with 37 CFR 1.84. This Notice set a two (2) month period for reply, with extensions of time obtainable under 37 CFR 1.136(a).

In the response, petitioners submitted replacement drawings, the petition fee and made the required statement of unintentional delay with the subject petition. No terminal disclaimer is required. Accordingly, the petition is granted under 37 CFR1.137(b).

This application is being forwarded to the Office of Initial Patent Examination for continued processing.

James Thomson
Attorney Advisor
Office of PCT Legal Administration

Tel: 571-272-3302

Frances Hicks for
Brian Hearn
Petitions Examiner
Office of Petitions

UNITED STATES PATENT AND TRADEMARK OFFICE

UNITED STATES DEPARTMENT OF COMMERCE
United States Patent and Trademark Office
Address: COMMISSIONER FOR PATENTS
P.O. Box 1450
Alexandria, Virginia 22313-1450
www.uspto.gov

William H. Francis
Reising, Ethington, Barnes, Kisselle, P.C.
P.O. Box 4390
Troy, MI 48099

Mail Date: 04/21/2010

Applicant	: Timothy J. Barnes	: DECISION ON REQUEST FOR
Patent Number	: 7617851	: RECALCULATION of PATENT
Issue Date	: 11/17/2009	: TERM ADJUSTMENT IN VIEW
Appliction No	: 10/857,690	: OF WYETH AND NOTICE OF INTENT TO
Filed	: 05/28/2004	: ISSUE CERTIFICATE OF CORRECTION
		:

The Request for Recalculation is **GRANTED** to the extent indicated.

The patent term adjustment has been determined to be **1168** days. The USPTO will *sua sponte* issue a certificate of correction reflecting the amount of PTA days determined by the recalculation.

Prior to the issuance of the certificate of correction, the USPTO will afford patentee an opportunity to be heard and request reconsideration. Accordingly, patentee has **one month or thirty (30) days**, whichever is longer, to file a request for reconsideration of this patent term adjustment calculation. See 35 U.S.C. 154(b)(3)(B)(ii) and 37 CFR 1.322(a)(4). No extensions of time will be granted under 37 CFR 1.136.

Patentee should use document code PET.OP if electronically filing a request for reconsideration of this patent term adjustment calculation. The patentee must also include the information required by 37 CFR 1.705(b)(2) and the fee required by 37 CFR 1.18(e). If patentee does not file a timely request for reconsideration of this patent term adjustment calculation including the information required by 37 CFR 1.705(b)(2) and the fee required by 37 CFR 1.18(e), the USPTO will issue a certificate of correction reflecting the PTA determination noted above.

Patentee should be aware that in order to preserve the right to review in the United States District Court for the District of Columbia of the USPTO patent term adjustment determination, patentee must ensure that he or she also take the steps required under 35 U.S.C. 154(b)(4)(A) in a timely manner. Nothing in the request for recalculation should be construed as providing an alternative time frame for commencing a civil action under 35 U.S.C. 154(b)(4)(A).

Any questions concerning this decision should be directed to the Office of Patent Legal Administration at 571-272-7702.

UNITED STATES PATENT AND TRADEMARK OFFICE

UNITED STATES DEPARTMENT OF COMMERCE
United States Patent and Trademark Office
Address: COMMISSIONER FOR PATENTS
P.O. Box 1450
Alexandria, Virginia 22313-1450
www.uspto.gov

William H. Francis
Reising, Ethington, Barnes, Kisselle, P.C.
P.O. Box 4390
Troy, MI 48099

Mail Date: 05/18/2010

Applicant : Timothy J. Barnes
Patent Number : 7617851
Issue Date : 11/17/2009
Application No : 10/857,690
Filed : 05/28/2004

: NOTICE CONCERNING IMPROPER
: CALCULATION OF PATENT TERM
: ADJUSTMENT BASED UPON USPTO
: IMPROPERLY MEASURING REDUCTION
: PERIOD UNDER 37 CFR 1.704(c)(10).

The United States Patent and Trademark Office (USPTO) discovered that in processing the recent recalculation decisions mailed in response to patentee's filed Request for Recalculation of Patent Term Adjustment in view of Wyeth, the USPTO improperly measured the reduction period for reductions under 37 CFR 1.704(c)(10). Pursuant to 37 CFR 1.704(c)(10), patentee's reduction begins on the date of filing the amendment under 37 CFR 1.312 ("1.312 amendment") or other related paper and ends on the date that the Office mails a response to the filing of the 1.312 amendment or other paper. It has been discovered that during the recalculation, the calculation failed to the limit the reduction to the mail date of the response to the 1.312 amendment or other paper. Accordingly, patentee's reductions were greater than warranted.

This notice **VACATES** the previous GRANTED request for recalculation and provides patentee with a revised GRANTED recalculation.

The patent term adjustment has been determined to be **1252** days. The USPTO will *sua sponte* issue a certificate of correction reflecting the amount of patent term adjustment (PTA) days determined by the recalculation.

Prior to the issuance of the certificate of correction, the USPTO will afford patentee an opportunity to be heard and request reconsideration. Accordingly, patentee has **one month or thirty (30) days** from the mail date of this notice, whichever is longer, to file a request for reconsideration of this PTA calculation. See 35 U.S.C. § 154(b)(3)(B)(ii) and 37 CFR 1.322(a)(4).

Patentee should use document code PET.OP if electronically filing a request for reconsideration of this PTA calculation. The patentee must also include the information required by 37 CFR 1.705(b)(2), and the fee required by 37 CFR 1.18(e). If patentee does not file a timely request for reconsideration of this PTA calculation, including the information required by 37 CFR 1.705(b)(2) and the fee required by 37 CFR 1.18(e), the USPTO will issue a certificate of correction reflecting the PTA determination noted above.

Patentee should be aware that in order to preserve the right of review of the USPTO's PTA determination in the United States District Court for the District of Columbia, patentee must ensure that the steps required under 35 U.S.C. § 154 (b)(4) are taken in a timely manner. Nothing in the request for recalculation should be construed as providing an alternative time frame for commencing a civil action under 35 U.S.C. § 154(b)(4).

UNITED STATES PATENT AND TRADEMARK OFFICE

UNITED STATES DEPARTMENT OF COMMERCE
United States Patent and Trademark Office
Address: COMMISSIONER FOR PATENTS
P.O. Box 1450
Alexandria, Virginia 22313-1450
www.uspto.gov

KNOBBE MARTENS OLSON & BEAR LLP
2040 MAIN STREET
FOURTEENTH FLOOR
IRVINE, CA 92614

Mail Date: 04/20/2010

Applicant	: Patrick M. Steusloff	: DECISION ON REQUEST FOR
Patent Number	: 7607571	: RECALCULATION of PATENT
Issue Date	: 10/27/2009	: TERM ADJUSTMENT IN VIEW
Appliction No	: 10/857,701	: OF WYETH AND NOTICE OF INTENT TO
Filed	: 05/28/2004	: ISSUE CERTIFICATE OF CORRECTION
		:

The Request for Recalculation is **GRANTED** to the extent indicated.

The patent term adjustment has been determined to be **1456** days. The USPTO will *sua sponte* issue a certificate of correction reflecting the amount of PTA days determined by the recalculation.

Prior to the issuance of the certificate of correction, the USPTO will afford patentee an opportunity to be heard and request reconsideration. Accordingly, patentee has **one month or thirty (30) days**, whichever is longer, to file a request for reconsideration of this patent term adjustment calculation. See 35 U.S.C. 154(b)(3)(B)(ii) and 37 CFR 1.322(a)(4). No extensions of time will be granted under 37 CFR 1.136.

Patentee should use document code PET.OP if electronically filing a request for reconsideration of this patent term adjustment calculation. The patentee must also include the information required by 37 CFR 1.705(b)(2) and the fee required by 37 CFR 1.18(e). If patentee does not file a timely request for reconsideration of this patent term adjustment calculation including the information required by 37 CFR 1.705(b)(2) and the fee required by 37 CFR 1.18(e), the USPTO will issue a certificate of correction reflecting the PTA determination noted above.

Patentee should be aware that in order to preserve the right to review in the United States District Court for the District of Columbia of the USPTO patent term adjustment determination, patentee must ensure that he or she also take the steps required under 35 U.S.C. 154(b)(4)(A) in a timely manner. Nothing in the request for recalculation should be construed as providing an alternative time frame for commencing a civil action under 35 U.S.C. 154(b)(4)(A).

Any questions concerning this decision should be directed to the Office of Patent Legal Administration at 571-272-7702.

UNITED STATES PATENT AND TRADEMARK OFFICE

UNITED STATES DEPARTMENT OF COMMERCE
United States Patent and Trademark Office
Address: COMMISSIONER FOR PATENTS
P.O. Box 1450
Alexandria, Virginia 22313-1450
www.uspto.gov

APPL NO.	FILING OR 371 (c) DATE	ART UNIT	FIL FEE REC'D	ATTY.DOCKET NO	DRAWINGS	TOT CLMS	IND CLMS
10/857,708	05/27/2004	2141	900	11538-003-999	17	12	1

CONFIRMATION NO. 3187

UPDATED FILING RECEIPT

OC000000014101473

20583
JONES DAY
222 EAST 41ST ST
NEW YORK, NY 10017

Date Mailed: 10/15/2004

Receipt is acknowledged of this regular Patent Application. It will be considered in its order and you will be notified as to the results of the examination. Be sure to provide the U.S. APPLICATION NUMBER, FILING DATE, NAME OF APPLICANT, and TITLE OF INVENTION when inquiring about this application. Fees transmitted by check or draft are subject to collection. Please verify the accuracy of the data presented on this receipt. **If an error is noted on this Filing Receipt, please write to the Office of Initial Patent Examination's Filing Receipt Corrections, facsimile number 703-746-9195. Please provide a copy of this Filing Receipt with the changes noted thereon. If you received a "Notice to File Missing Parts" for this application, please submit any corrections to this Filing Receipt with your reply to the Notice. When the USPTO processes the reply to the Notice, the USPTO will generate another Filing Receipt incorporating the requested corrections (if appropriate).**

Applicant(s)

Kiran Kulkarni, Mumbai, INDIA;
Mahesh Murthy, Mumbai, INDIA;
Vinod Panicker, Mumbai, INDIA;

Power of Attorney: The patent practitioners associated with Customer Number **20583**.

Domestic Priority data as claimed by applicant

This appln claims benefit of 60/473,501 05/27/2003

Foreign Applications

If Required, Foreign Filing License Granted: 07/23/2004

The country code and number of your priority application, to be used for filing abroad under the Paris Convention, is US10/857,708

Projected Publication Date: 01/27/2005

Non-Publication Request: No

Early Publication Request: No

Title

Universal presence indicator and instant messaging system

Preliminary Class

709

LICENSE FOR FOREIGN FILING UNDER
Title 35, United States Code, Section 184
Title 37, Code of Federal Regulations, 5.11 & 5.15

GRANTED

The applicant has been granted a license under 35 U.S.C. 184, if the phrase "IF REQUIRED, FOREIGN FILING LICENSE GRANTED" followed by a date appears on this form. Such licenses are issued in all applications where the conditions for issuance of a license have been met, regardless of whether or not a license may be required as set forth in 37 CFR 5.15. The scope and limitations of this license are set forth in 37 CFR 5.15(a) unless an earlier license has been issued under 37 CFR 5.15(b). The license is subject to revocation upon written notification. The date indicated is the effective date of the license, unless an earlier license of similar scope has been granted under 37 CFR 5.13 or 5.14.

This license is to be retained by the licensee and may be used at any time on or after the effective date thereof unless it is revoked. This license is automatically transferred to any related applications(s) filed under 37 CFR 1.53(d). This license is not retroactive.

The grant of a license does not in any way lessen the responsibility of a licensee for the security of the subject matter as imposed by any Government contract or the provisions of existing laws relating to espionage and the national security or the export of technical data. Licensees should apprise themselves of current regulations especially with respect to certain countries, of other agencies, particularly the Office of Defense Trade Controls, Department of State (with respect to Arms, Munitions and Implements of War (22 CFR 121-128)); the Office of Export Administration, Department of Commerce (15 CFR 370.10 (j)); the Office of Foreign Assets Control, Department of Treasury (31 CFR Parts 500+) and the Department of Energy.

NOT GRANTED

No license under 35 U.S.C. 184 has been granted at this time, if the phrase "IF REQUIRED, FOREIGN FILING LICENSE GRANTED" DOES NOT appear on this form. Applicant may still petition for a license under 37 CFR 5.12, if a license is desired before the expiration of 6 months from the filing date of the application. If 6 months has lapsed from the filing date of this application and the licensee has not received any indication of a secrecy order under 35 U.S.C. 181, the licensee may foreign file the application pursuant to 37 CFR 5.15(b).

UNITED STATES PATENT AND TRADEMARK OFFICE

Commissioner for Patents
United States Patent and Trademark Office
P.O. Box 1450
Alexandria, VA 22313-1450
www.uspto.gov

Paper No. 012105

LAW OFFICES OF PARK & ASSOCIATES
3600 WILSHIRE BLVD., SUITE 1722
LOS ANGELES, CA 90010

FEB 24 2005

In re Application of:
KIM, TAE HYEON et al.
Serial No.: 10/857,714
Filed: May 28, 2004
Attorney Docket No.: **1802.09**

DECISION ON REQUEST TO WITHDRAW FROM RECORD

This is a decision on the request to withdraw as attorney/agent of record under 37 C.F.R. § 1.36, filed January 05, 2005.

A grantable request to withdraw as attorney of record must be signed by every attorney seeking to withdraw or contain a clear indication that one attorney is signing on behalf of others. A request to withdraw will not be approved unless at least thirty (30) days would remain between the date of approval and the later of the expiration date of a time to file a response or the expiration date of the maximum time period, which can be extended under 37 C.F.R. § 1.136(a).

The request meets all the above stated requirements. The request was signed by George W. Luckhart, on behalf of himself. There is no outstanding Office action at this time.

The request is **APPROVED**.

The law firm of Parks and Associates remains of record at this time.

All future communications from the Office will continue to be directed to Parks and Associates, at the below address, until otherwise notified by applicant.

Inquiries related to this decision should be directed to Jose Dees at (571) 272-1569.

Jose Dees, Special Programs Examiner
Technology Center 2800
Semiconductors, Electrical and Optical
Systems and Components

UNITED STATES PATENT AND TRADEMARK OFFICE

Commissioner for Patents
United States Patent and Trademark Office
P.O. Box 1450
Alexandria, VA 22313-1450
www.uspto.gov

IBM CORPORATION, INTELLECTUAL PROPERTY LAW
DEPT 917, BLDG. 006-1
3605 HIGHWAY 52 NORTH
ROCHESTER MN 55901-7829

COPY MAILED

MAY 0 1 2009

OFFICE OF PETITIONS

In re Application of	:	
Dettinger, et al.	:	
Application No. 10/857,722	:	DECISION ON PETITION
Filed: May 28, 20204	:	
Attorney Docket No. ROC920040042US1	:	

This is a decision on the petition, filed November 21, 2008, which is being treated as a petition under 37 CFR 1.181 (no fee) requesting withdrawal of the holding of abandonment in the above-identified application.

The petition is **GRANTED**.

This application was held abandoned for failure to reply to the final Office action mailed April 18, 2008, which set a three (3) month shortened statutory period for reply. A Notice of Abandonment was mailed on March 3, 2009.

Petitioner asserts that the Office action dated April 18, 2008 was not received.

A review of the written record indicates no irregularity in the mailing of the Office action, and, in the absence of any irregularity, there is a strong presumption that the Office action was properly mailed to the practitioner at the address of record. This presumption may be overcome by a showing that the Office action was not in fact received. In this regard, the showing required to establish the failure to receive the Office action must consist of the following:

1. a statement from practitioner stating that the Office action was not received by the practitioner;

2. a statement from the practitioner attesting to the fact that a search of the file jacket and docket records indicates that the Office action was not received; and

3. a copy of the docket record where the non-received Office action would have been entered had it been received and docketed must be attached to and referenced in the practitioner's statement.

See MPEP § 711.03(c) under subheading "Petition to Withdraw Holding of Abandonment Based on Failure to Receive Office Action," and "Withdrawing the Holding of Abandonment When Office Actions Are Not Received," 1156 Official Gazette 53 (November 16, 1993).

The petition satisfies the above-stated requirements. Accordingly, the application was not abandoned in fact.

In view of the above, the Notice of Abandonment is hereby vacated and the holding of abandonment withdrawn.

This application is being referred to the Technology Center technical support staff of Art Unit 2162 for re-mailing the Office action of April 18, 2008. The period for reply will run from the mailing date of the Office action.

Telephone inquiries pertaining to this decision may be directed to the undersigned at (571) 272-3230.

Shirene Willis Brantley

Shirene Willis Brantley
Senior Petitions Attorney
Office of Petitions

UNITED STATES PATENT AND TRADEMARK OFFICE

Commissioner for Patents
United States Patent and Trademark Office
P.O. Box 1450
Alexandria, VA 22313-1450
www.uspto.gov

BAKER BOTTS L.L.P.
30 ROCKEFELLER PLAZA
44th Floor
NEW YORK NY 10112-4498

COPY MAILED

JUL 0 2 2009

OFFICE OF PETITIONS

In re Patent No. 7,465,446	:	
LOWY et al.	:	DECISION ON
Issue Date: December 16, 2008	:	REQUEST FOR RECONSIDERATION
Application No. 10/857,749	:	OF
Filed: May 27, 2004	:	PATENT TERM ADJUSTMENT
Attorney Docket No. 077375.0156	:	

This is a decision on the "REQUEST FOR RECONSIDRATION OF PATENT TERM ADJUSTMENT UNDER 37 C.F.R. §1.705(d)", filed February 12, 2009, requesting that the patent term adjustment determination for the above-identified patent be changed from five hundred sixty-nine (569) days to one thousand fifty-nine (1,059) days.

The request for reconsideration of patent term adjustment is **DISMISSED**.

On December 16, 2008, the above-identified application matured into US Patent No. 7,465,446 with a revised patent term adjustment of 569 days. This request for reconsideration of patent term adjustment was timely filed within two months of the issue date of the patent. See 37 CFR 1.705(d).

Patentees request recalculation of the patent term adjustment based on the decision in Wyeth v. Dudas, 580 F. Supp. 2d 138, 88 U.S.P.Q. 2d 1538 (D.D.C. 2008). Patentees assert that pursuant to Wyeth, where there is no overlap between the PTO delay under 35 U.S.C. 154(b)(1)(A) and the delay under 35 U.S.C. 154(b)(1)(B), the correct calculation for patent term adjustment is the sum of PTO delay plus Three Year Delay. Patentees maintain that the period of adjustment due to the Three Year Delay by the Office, pursuant to 37 CFR 1.702(b), of 569 days

and the period of adjustment due to examination delay, pursuant to 37 CFR 1.702(a), of 490 days do not overlap.

The 569-day period is calculated based on the application having been filed under 35 U.S.C. 111(a) on May 27, 2004, and the patent having been issued on December 16, 2008, three years and 569 days later. Patentees assert that in addition to this 569-day period, they are entitled to a period of adjustment due to examination delay pursuant to 37 CFR 1.702(a)(1) of 490 days for the failure by the Office to mail at least one of a notification under 35 U.S.C. 132 not later than fourteen months after the date on which the application was filed under 35 U.S.C. 111(a). A nonfinal Office action was mailed on November 29, 2006, 14 months and 490 days after the application was filed on May 27, 2004.

Under 37 CFR 1.703(f), patentees are entitled to a period of patent term adjustment equal to the period of delays based on the grounds set forth in 37 CFR 1.702 reduced by the period of time equal to the period of time during which patentees failed to engage in reasonable efforts to conclude prosecution pursuant to 37 CFR 1.704. In other words, patentees are entitled to the period of Office delay reduced by the period of applicant delay. Patentees do not dispute the period of reduction of 0 days for applicant delay.

Patentees do not dispute that the total period of Office delay is the sum of the period of Three Years Delay (569 days) and the period of Examination Delay (490 days) to the extent that these periods of delay are not overlapping. However, in effect, patentees contend that no portion of the Three Year Delay period overlaps with the period of 14-month examination delay. Accordingly, patentees submit that the total period of adjustment for Office delay is 1,059 days, which is the sum of the period of Three Year Delay (569 days) and the period of Examination Delay (490 days), reduced by the period of overlap (0 days). As such, patentees assert entitlement to a patent term adjustment of 1,059 days (569 + 490 reduced by 0 overlap - 0 (applicant delay)).

The Office agrees that as of the issuance of the patent on December 16, 2008, the application was pending three years and 569 days after its filing date. The Office agrees that the action detailed above was not taken within the specified time

frame, and thus, the entry of a period of adjustment of 490 days is correct. At issue is whether patentees should accrue 569 days of patent term adjustment for the Office taking in excess of three years to issue the patent, as well as, 490 days for Office failure to take a certain action within a specified time frame (or examination delay).

The Office contends that all 569 days overlap. Patentees' calculation of the period of overlap is inconsistent with the Office's interpretation of this provision. 35 U.S.C. 154(b)(2)(A) limits the adjustment of patent term, as follows:

> to the extent that the periods of delay attributable to grounds specified in paragraph (1) overlap, the period of any adjustment granted under this subsection shall not exceed the actual number of days the issuance of the patent was delayed.

Likewise, 35 CFR 1.703(f) provides that:

> To the extent that periods of delay attributable to the grounds specified in § 1.702 overlap, the period of adjustment granted under this section shall not exceed the actual number of days the issuance of the patent was delayed.

As explained in *Explanation of 37 CFR 1.703(f) and of the United States Patent and Trademark Office Interpretation of 35 U.S.C. 154(b)(2)(A)*, 69 Fed. Reg. 34283 (June 21, 2004), the Office interprets 35 U.S.C. 154(b)(2)(A) as permitting either patent term adjustment under 35 U.S.C. 154(b)(1)(A)(i)-(iv), or patent term adjustment under 35 U.S.C. 154(b)(1)(B), but not as permitting patent term adjustment under both 35 U.S.C. 154(b)(1)(A)(i)-(iv) and 154(b)(1)(B). Accordingly, the Office implements the overlap provision as follows:

> If an application is entitled to an adjustment under 35 U.S.C. 154(b)(1)(B), the entire period during which the application was pending (except for periods excluded under 35 U.S.C. 154(b)(1)(B)(i)-(iii)), and not just the period beginning three years after the actual filing date of the application, is the period of delay under 35 U.S.C. 154(b)(1)(B) in determining whether periods of delay overlap under 35 U.S.C. 154(b)(2)(A). Thus, any days of

> delay for Office issuance of the patent more than 3 years after the filing date of the application, which overlap with the days of patent term adjustment accorded prior to the issuance of the patent will not result in any additional patent term adjustment. See 35 U.S.C. 154(b)(1)(B), 35 U.S.C. 154(b)(2)(A), and 37 CFR § 1.703(f). See *Changes to Implement Patent Term Adjustment Under Twenty Year Term; Final Rule*, 65 Fed. Reg. 56366 (Sept. 18, 2000). See also *Revision of Patent Term Extension and Patent Term Adjustment Provisions; Final Rule*, 69 Fed. Reg. 21704 (April 22, 2004), 1282 Off. Gaz. Pat. Office 100 (May 18, 2004). See also *Explanation of 37 CFR 1.703(f) and of the United States Patent and Trademark Office Interpretation of 35 U.S.C. 154(b)(2)(A)*, 69 Fed. Reg. 34283 (June 21, 2004).

The current wording of § 1.703(f) was revised in response to the misinterpretation of this provision by a number of Patentees. The rule was slightly revised to more closely track the corresponding language of 35 U.S.C. 154(b)(2)(A). The relevant portion differs only to the extent that the statute refers back to provisions of the statute whereas the rule refers back to sections of the rule. This was not a substantive change to the rule nor did it reflect a change of the Office's interpretation of 35 U.S.C. 154(b)(2)(A). As stated in the *Explanation of 37 CFR 1.703(f) and of the United States Patent and Trademark Office Interpretation of 35 U.S.C. 154(b)(2)(A)*, the Office has consistently taken the position that if an application is entitled to an adjustment under the three-year pendency provision of 35 U.S.C. 154(b)(1)(B), the entire period during which the application was pending before the Office (except for periods excluded under 35 U.S.C. 154(b)(1)(B)(i)-(iii)), and not just the period beginning three years after the actual filing date of the application, is the relevant period under 35 U.S.C. 154(b)(1)(B) in determining whether periods of delay "overlap" under 35 U.S.C. 154(b)(2)(A).

This interpretation is consistent with the statute. Taken together the statute and rule provide that to the extent that periods of delay attributable to grounds specified in 35 U.S.C. 154(b)(1) and in corresponding § 1.702 overlap, the period of adjustment granted shall not exceed the actual number of days the issuance of the patent was delayed. The grounds specified in these sections cover the A) guarantee of prompt Patent and

Trademark Office responses, B) guarantee of no more than 3-year application pendency, and C) guarantee or adjustments for delays due to interference, secrecy orders and appeals. A section by section analysis of 35 U.S.C. 154(b)(2)(A) specifically provides that:

> Section 4402 imposes limitations on restoration of term. In general, pursuant to [35 U.S.C.] 154(b)(2)(A)-(C), total adjustments granted for restorations under [35 U.S.C. 154](b)(1) are reduced as follows: (1) To the extent that there are multiple grounds for extending the term of a patent that may exist simultaneously (e.g., delay due to a secrecy order under [35 U.S.C.] 181 and administrative delay under [35 U.S.C.] 154(b)(1)(A)), the term should not be extended for each ground of delay but only for the actual number of days that the issuance of a patent was delayed; See 145 Cong. Rec. S14,718[1]

As such, the period for over three-year pendency does not overlap only to the extent that the actual dates in the period beginning three years after the date on which the application was filed overlap with the actual dates in the periods for failure of the Office to take action within specified time frames. In other words, consideration of the overlap does not begin three years after the filing date of the application.

In this instance, the relevant period under 35 U.S.C. 154(b)(i)(B) in determining whether periods of delay "overlap" under 35 U.S.C. 154(b)(2)(A) is the entire period during which the application was pending before the Office from the date the application was filed under 35 U.S.C. 111(a) on May 27, 2004, to the date the patent issued on December 16, 2008. (There were no periods excluded under 35 U.S.C. 154(b)(i)(B)(i)-(iii)). Prior to the issuance of the patent, 490 days of patent term adjustment were accorded for the Office failing to respond within a specified time frame during the pendency of the

---

[1] The AIPA is title IV of the Intellectual Property and Communications Omnibus Reform Act of 1999 (S. 1948), which was incorporated and enacted as law as part of Pub. L. 106-113. The Conference Report for H.R. 3194, 106th Cong. 1st Sess. (1999), which resulted in Pub. L. 106-113, does not contain any discussion (other than the incorporated language) of S. 1948. A section-by-section analysis of S. 1948, however, was printed in the Congressional Record at the request of Senator Lott, See 145 Cong. Rec. S14,708-26 (1999)(daily ed. Nov. 17, 1999).

application. 569 days for Office delay in issuing the patent overlap with the 490 days accorded pursuant to 37 CFR 1.702(a)(1) during the pendency of the application. Accordingly, 79 days of patent term adjustment was properly entered since the period of delay of 569 days attributable to the delay in the issuance of the patent overlaps with the adjustment of 490 days attributable to ground specified in § 1.702(a)(1).

Accordingly, at issuance, the Office properly entered 79 additional days of patent term adjustment for the Office taking in excess of three years to issue the patent for a total Office delay of 569 days.

In view thereof, the revised determination of patent term adjustment at the time of the issuance of the patent will remain 569 days.

The Office acknowledges the submission of the $200.00 fee set forth in 37 CFR 1.18(e). No additional fees are required.

Telephone inquiries specific to this matter should be directed to the undersigned at (571) 272-3211.

Christina Tartera Donnell

Christina Tartera Donnell
Senior Petitions Attorney
Office of Petitions

UNITED STATES PATENT AND TRADEMARK OFFICE

COMMISSIONER FOR PATENTS
UNITED STATES PATENT AND TRADEMARK OFFICE
P.O. BOX 1450
ALEXANDRIA, VA 22313-1450
www.uspto.gov

Baker Botts LLP
30 Rockefeller Plaza
44th Floor
New York, New York 10112-4498

MAILED

APR 12 2010

OFFICE OF PETITIONS

In re Patent No. 7,465,446	:
Lowy et al.	: DECISION UPON REMAND AND
Issue Date: December 16, 2008	: RECONSIDERATION OF
Application No. 10/857,749	: PATENT TERM ADJUSTMENT
Filed: May 27, 2004	: AND NOTICE OF INTENT
Attorney Docket No. 077375.0156	: TO ISSUE CERTIFICATE OF
Title: Surrogate Therapeutic	: CORRECTION
Endpoint for Anti-CTL4-Based	:
Immunotherapy of Disease	

This is a decision following remand from the District Court for the District of Columbia regarding the patent term adjustment indicated on the above-identified patent. The Court remanded this matter to the U.S. Patent and Trademark Office for recalculation of the patent term adjustment in accordance with the decision in Wyeth & Elan Pharma Int'l Ltd. v. Kappos, 591 F.3d 1364 (Fed. Cir. 2010).

The patent term adjustment indicated on the above-identified patent has been recalculated as directed by the Court. The term of the above-identified patent is extended or adjusted by one thousand and fifty-nine (1059)days.

The application is being forwarded to the Certificates Branch for issuance of a certificate of correction indicating that the term of the above-identified patent is extended or adjusted by one thousand and fifty-nine (1059) days.

Telephone inquiries specific to this matter should be directed to Senior Legal Advisor, Kery A. Fries at (571) 272-7757.

/Kery A. Fries/

Kery A. Fries
Senior Legal Advisor Attorney
Office of Patent Legal Administration
Office of Associate Commissioner
For Patent Examination Policy

Enclosure: Copy of DRAFT Certificate of Correction

UNITED STATES PATENT AND TRADEMARK OFFICE

CERTIFICATE OF CORRECTION

PATENT : 7,465,446 B2

DATED : Dec. 16, 2008 **DRAFT**

INVENTOR(S) : Lowy et al.

It is certified that error appears in the above-identified patent and that said Letters Patent is hereby corrected as shown below:

On the cover page,

[*] Notice: Subject to any disclaimer, the term of this patent is extended or adjusted under 35 USC 154(b) by 569 days

Delete the phrase "by 569 days" and insert – by 1059 days--

PALM INTRANET

Day : Friday
Date: 4/9/2010
Time: 14:16:54

PTA Calculations for Application: 10/857749			
Application Filing Date:	05/27/2004	PTO Delay (PTO):	569
Issue Date of Patent:	12/16/2008	Three Years:	0
Pre-Issue Petitions:	0	Applicant Delay (APPL):	0
Post-Issue Petitions:	0	Total PTA (days):	1059
PTO Delay Adjustment:	490		

File Contents History

Number	Date	Contents Description	PTO	APPL	START
80	04/09/2010	ADJUSTMENT OF PTA CALCULATION BY PTO	490		
71.5	11/25/2008	PTA 36 MONTHS	79		
71	12/16/2008	PATENT ISSUE DATE USED IN PTA CALCULATION			
70	11/13/2008	EXPORT TO FINAL DATA CAPTURE			
69	11/12/2008	DISPATCH TO FDC			
68	11/12/2008	APPLICATION IS CONSIDERED READY FOR ISSUE			
67	11/11/2008	ISSUE FEE PAYMENT VERIFIED			
66	11/11/2008	ISSUE FEE PAYMENT RECEIVED			
65	09/04/2008	FINISHED INITIAL DATA CAPTURE			
60	08/12/2008	MAIL NOTICE OF ALLOWANCE			
59	08/07/2008	ISSUE REVISION COMPLETED			
58	08/07/2008	DOCUMENT VERIFICATION			
57	08/07/2008	NOTICE OF ALLOWANCE DATA VERIFICATION COMPLETED			
56	08/06/2008	NOTICE OF ALLOWABILITY			
52	07/25/2008	DATE FORWARDED TO EXAMINER			
51	07/16/2008	AMENDMENT AFTER FINAL REJECTION			
50	07/17/2008	EMAIL NOTIFICATION			
49	07/17/2008	MAIL EXAMINER INTERVIEW SUMMARY (PTOL - 413)			
48	07/14/2008	EXAMINER INTERVIEW SUMMARY RECORD (PTOL - 413)			
47	05/20/2008	ELECTRONIC REVIEW			
46	05/17/2008	EMAIL NOTIFICATION			
45	05/16/2008	MAIL FINAL REJECTION (PTOL - 326)			
44	05/12/2008	FINAL REJECTION			

43	03/28/2008	DATE FORWARDED TO EXAMINER			
42	03/04/2008	RESPONSE AFTER NON-FINAL ACTION			
41	12/05/2007	ELECTRONIC REVIEW			
40	12/04/2007	EMAIL NOTIFICATION			
39	12/04/2007	MAIL NON-FINAL REJECTION			
38	11/28/2007	NON-FINAL REJECTION			
37	09/21/2007	DATE FORWARDED TO EXAMINER			
36	09/14/2007	RESPONSE AFTER NON-FINAL ACTION			
35	06/19/2007	MAIL NON-FINAL REJECTION			
34	06/08/2007	NON-FINAL REJECTION			
33	08/08/2006	INFORMATION DISCLOSURE STATEMENT CONSIDERED			
32	05/17/2005	INFORMATION DISCLOSURE STATEMENT CONSIDERED			
31	09/29/2004	INFORMATION DISCLOSURE STATEMENT CONSIDERED			
30	04/06/2007	DATE FORWARDED TO EXAMINER			
29	04/04/2007	RESPONSE TO ELECTION / RESTRICTION FILED			
28	03/14/2007	MAIL RESTRICTION REQUIREMENT			
27	03/12/2007	REQUIREMENT FOR RESTRICTION / ELECTION			
26	01/05/2007	DATE FORWARDED TO EXAMINER			
25	12/21/2006	RESPONSE TO ELECTION / RESTRICTION FILED			
24	11/29/2006	MAIL RESTRICTION REQUIREMENT	490		-1
23	11/27/2006	REQUIREMENT FOR RESTRICTION / ELECTION			
22.7	08/08/2006	INFORMATION DISCLOSURE STATEMENT (IDS) FILED			
22	08/08/2006	INFORMATION DISCLOSURE STATEMENT (IDS) FILED			
21	08/11/2006	CORRESPONDENCE ADDRESS CHANGE			
20	08/14/2006	CHANGE IN POWER OF ATTORNEY (MAY INCLUDE ASSOCIATE POA)			
19	07/10/2006	CORRESPONDENCE ADDRESS CHANGE			
18.7	05/17/2005	INFORMATION DISCLOSURE STATEMENT (IDS) FILED			
18	05/17/2005	INFORMATION DISCLOSURE STATEMENT (IDS) FILED			
17	05/04/2005	CASE DOCKETED TO EXAMINER IN GAU			
16	12/02/2004	CORRESPONDENCE ADDRESS CHANGE			
15	09/29/2004	REFERENCE CAPTURE ON IDS			

14.7	09/29/2004	INFORMATION DISCLOSURE STATEMENT (IDS) FILED			
14	09/29/2004	INFORMATION DISCLOSURE STATEMENT (IDS) FILED			
13	08/04/2004	CASE DOCKETED TO EXAMINER IN GAU			
12	08/04/2004	IFW TSS PROCESSING BY TECH CENTER COMPLETE			
11	07/26/2004	APPLICATION RETURN FROM OIPE			
10	07/26/2004	APPLICATION RETURN TO OIPE			
9	07/26/2004	APPLICATION RETURN FROM OIPE			
8	07/27/2004	APPLICATION IS NOW COMPLETE			
7	07/26/2004	APPLICATION RETURN TO OIPE			
6	07/23/2004	APPLICATION DISPATCHED FROM OIPE			
5	07/26/2004	APPLICATION IS NOW COMPLETE			
4	07/06/2004	CLEARED BY OIPE CSR			
3	07/06/2004	CASE CLASSIFIED BY OIPE			
2	06/18/2004	IFW SCAN & PACR AUTO SECURITY REVIEW			
1	05/27/2004	INITIAL EXAM TEAM NN			

Search Another: Application# Search

EXPLANATION OF PTA CALCULATION

EXPLANATION OF PTE CALCULATION

To go back, right click here and select Back. To go forward, right click here and select Forward. To refresh, right click here and select Refresh.

Back to OASIS | Home page

UNITED STATES PATENT AND TRADEMARK OFFICE

Commissioner for Patents
United States Patent and Trademark Office
P.O. Box 1450
Alexandria, VA 22313-1450
www.uspto.gov

Paper No.

MARSHA BETH BREWER
P.O. Box 655
Appleton, WI 54912-0655

COPY MAILED
DEC 21 2005
OFFICE OF PETITIONS

In re Application of	:	
Marsha Beth Brewer	:	DECISION ON
Application No. 10/857,753	:	PETITION
Filed: May 29, 2004	:	
Title: ANIMAL FLUSH TOILET	:	
AND ASSEMBLY SYSTEM	:	

This is a decision on the paper styled "petition for reconsideration for you to withdraw your holding of abandonment" filed May 2, 2005. Therein, applicant requests that the above-identified application be revived on grounds of unavoidable or unintentional delay or other appropriate grounds that apply. This decision is made in light of the additional response filed on June 20, 2005.

The petition to withdraw the holding of abandonment pursuant to 37 CFR § 1.181 is **DISMISSED**.

The petition for revival under both §§ 1.137(a) and 1.137(b) is **DISMISSED**.

Any request for reconsideration must be submitted within **TWO (2) MONTHS** from the mail date of this decision. Extensions of time under 37 C.F.R. §1.136(a) are permitted. The reconsideration request should include a cover letter entitled "Request for Reconsideration under 37 C.F.R. § 1.181" or "Renewed Petition under 37 C.F.R. § 1.137(a)" or "Renewed Petition under 37 C.F.R. § 1.137(b)," as appropriate.

The above-identified application became abandoned for failure to file a reply to the Notice to File Missing Parts of Application

mailed July 26, 2004. This Notice set a two-month period for reply, with extensions of time obtainable under § 1.136(a). No extensions of time having been obtained pursuant to 37 C.F.R. § 1.136(a) and no reply having been submitted, the above-identified application became abandoned on September 27, 2004. A Notice of Abandonment was mailed on April 19, 2005.

On May 16, 2005, the Office mailed a courtesy copy of the Notice to applicant. This Notice did not change the time period for reply; it continued to run from the mail date of the Notice mailed July 26, 2004.

On June 20, 2005, applicant filed the response. In addition, applicant asserted that she did not receive the July 26, 2004 Notice until May 2005.

DISCUSSION

There is a strong presumption that a communication was properly mailed to the applicant at the correspondence address of record. In this instance, a review of the record indicates no irregularity in the mailing of the July 26, 2004 Office action. The Office action was mailed to the correspondence address of record. There is no indication that it returned to the Office as undeliverable. The Notice received by applicant in May of 2005 was a copy of the original Notice resent to applicant as a courtesy. To warrant a withdrawal of the holding of abandonment for non-receipt, the presumption must be overcome. The presumption may be overcome by a showing that the aforementioned communication was not in fact received at the correspondence address of record.

Petitioner has not overcome this presumption. Petitioner has not adequately supported her allegation of non-receipt of the Office action. Petitioner has not made a showing that the Office action was not received at the correspondence address of record. The showing required to establish non-receipt of an Office communication must include a statement from the practitioner stating that the Office communication was not received by the practitioner and attesting to the fact that a search of the file jacket and docket records indicates that the Office communication was not received. A copy of the docket record where the non-received Office communication would have been entered had it been received and docketed must be attached to and referenced in practitioner's statement. For example, if a

three-month period for reply was set in the non-received Office action, a copy of the docket report showing all replies docketed for a date three months from the mail date of the non-received Office action must be submitted as documentary proof of non-receipt of the Office action.

Moreover, petitioner has not met the requirements for consideration of the petition under 37 C.F.R. § 1.137(a) or (b). 35 U.S.C. 41(a) (7) provides that a petition for the revival of an unintentionally abandoned application or for the unintentionally delayed payment of the issue fee must be accompanied by the petition fee set forth in 37 C.F.R. § 1.17(m), unless the petition is filed under 35 U.S.C. 133 or 151 (on the basis of unavoidable delay), in which case the fee is set forth in 37 C.F.R. § 1.17(l). Thus, unless the circumstances warrant the withdrawal of the holding of abandonment (i.e., it is determined that the application is not properly held abandoned), the payment of a petition fee to obtain the revival of an abandoned application is a statutory prerequisite to revival of the abandoned application, and cannot be waived.

In addition, the phrase "[o]n filing" in 35 U.S.C. 41(a)(7) means that the petition fee is required for the filing (and not merely the grant) of a petition under 37 C.F.R. § 1.137. See H.R. Rep. No. 542, 97th Cong., 2d Sess. 6 (1982), reprinted in 1982 U.S.C.C.A.N. 770 ("[t]he fees set forth in this section are due on filing the petition"). Therefore, the Office: (A) will not refund the petition fee required by 37 C.F.R. § 1.17(l) or 1.17(m), regardless of whether the petition under 37 C.F.R. § 1.137 is dismissed or denied; and (B) will not reach the merits of any petition under 37 C.F.R. § 1.137 lacking the requisite petition fee.

For the reasons set forth above, withdrawal of the holding of abandonment is not warranted. Thus, the petition fee is required to consider revival. The Office does not have the authority to waive this fee. As payment of a petition fee to obtain the revival of an abandoned application is a statutory prerequisite to revival of an abandoned application and petitioner has not made such a payment, the petition must be dismissed without consideration on the merits under § 1.137.

For applicant's convenience, courtesy copies of the forms used to file petitions under §§ 1.137(a) and (b) are enclosed.

Receipt of the responses to the Notice to File Missing Parts of Application filed June 20, 2005, is acknowledged.

Further correspondence with respect to this decision should be addressed as follows:

By mail: Mail Stop Petition
Commissioner for Patents
P.O. Box 1450
Alexandria, VA 22313-1450

By fax: (571) 273-8300
ATTN: Office of Petitions

By hand: Customer Service Window
Randolph Building
401 Dulany Street
Alexandria, VA 22314

Telephone inquiries related to this decision should be directed to the undersigned at (571) 272-3219. General petitions-related questions may be directed to the Office of Petitions Help Desk, at (571) 272-3282 from 8:30 am to 5pm (EST) Monday - Friday.

Nancy Johnson
Senior Petitions Attorney
Office of Petitions

Enclosures: PTO/SB/63 and PTO/SB/64

UNITED STATES PATENT AND TRADEMARK OFFICE

Commissioner for Patents
United States Patent and Trademark Office
P.O. Box 1450
Alexandria, VA 22313-1450
www.uspto.gov

Paper No.

MARSHA BETH BREWER
P.O. Box 655
Appleton, WI 54912-0655

COPY MAILED
SEP 27 2006
OFFICE OF PETITIONS

In re Application of	:	
Marsha Beth Brewer	:	DECISION ON
Application No. 10/857,753	:	PETITION
Filed: May 29, 2004	:	
Title: ANIMAL FLUSH TOILET	:	
AND ASSEMBLY SYSTEM	:	

This is in response to the papers filed February 21, 2006, including a PETITION FOR REVIVAL OF AN APPLICATION FOR PATENT ABANDONED UNAVOIDABLY UNDER 37 CFR 1.137(a), a PETITION FOR REVIVAL OF AN APPLICATION FOR PATENT ABANDONED UNINTENTIONALLY UNDER 37 CFR 1.137(b) and a renewed request to withdraw the holding of abandonment pursuant to 37 CFR 1.181.

The renewed petition under 37 CFR 1.181 is **DISMISSED**.

The petitions under 37 CFR 1.137 are **DISMISSED** without consideration on the merits.

Any request for reconsideration must be submitted within TWO (2) MONTHS from the mail date of this decision. Extensions of time under 37 C.F.R. §1.136(a) are permitted. The reconsideration request should include a cover letter entitled "Request for Reconsideration under 37 C.F.R. § 1.181" or "Renewed Petition under 37 C.F.R. § 1.137(a)" or "Renewed Petition under 37 C.F.R. § 1.137(b)," as appropriate.

The above-identified application became abandoned for failure to file a reply to the Notice to File Missing Parts of Application mailed July 26, 2004. A Notice of Abandonment was mailed on April 19, 2005. By decision mailed December 21, 2005, the

previous petition filed May 2, 2005 (and supplemented June 20, 2005) was dismissed pursuant to 37 CFR 1.181, and 37 CFR 1.137(a) and 1.137(b). Petitioner failed to establish non-receipt of the Office communication as required, in this instance, for withdrawal of the holding of abandonment. As petitioner did not include payment of either petition fee, the Office did not consider reviving the application.

On instant renewed petition, applicant continues to fail to establish non-receipt of the Office communication. As previously stated, the showing required to establish non-receipt of an Office communication must include a statement from the practitioner stating that the Office communication was not received by the practitioner and attesting to the fact that a search of the file jacket and docket records indicates that the Office communication was not received. A copy of the docket record where the non-received Office communication would have been entered had it been received and docketed must be attached to and referenced in practitioner's statement.

Petitioner attests to having not received the Office communication. However, petitioner does not attest to having searched the file jacket and docket records. In fact, petitioner states that she does not have a file jacket or docket records.

Moreover, petitioner has not met the requirements for consideration of the petition under 37 C.F.R. § 1.137(a) or (b). Petitioner submitted completed forms for consideration of revival under both section of 37 CFR 1.137. However, no petition fee accompanied either form.

As applicant was previously advised, 35 U.S.C. 41(a) (7) provides that a petition for the revival of an unintentionally or unavoidably abandoned application must be accompanied by the petition fee. Further, payment of a petition fee to obtain the revival of an abandoned application is a statutory prerequisite to revival of the abandoned application, and cannot be waived. In addition, the Office: (A) will not refund the petition fee, regardless of whether the petition under 37 C.F.R. § 1.137 is dismissed or denied; and (B) will not reach the merits of any petition under 37 C.F.R. § 1.137 lacking the requisite petition fee. In other words, applicant must pay the petition fee before the Office will consider the petition to revive and whether the petition is granted or dismissed the fee will not be refunded.

As no payment was enclosed, the petitions must be dismissed without consideration on the merits under § 1.137.

Further correspondence with respect to this decision should be addressed as follows:

By mail: Mail Stop Petition
Commissioner for Patents
P.O. Box 1450
Alexandria, VA 22313-1450

By fax: (571) 273-8300
ATTN: Office of Petitions

By hand: Customer Service Window
Randolph Building
401 Dulany Street
Alexandria, VA 22314

Telephone inquiries related to this decision should be directed to the undersigned at (571) 272-3219. General petitions-related questions may be directed to the Office of Petitions Help Desk, at (571) 272-3282 from 8:30 am to 5pm (EST) Monday - Friday.

Nancy Johnson
Senior Petitions Attorney
Office of Petitions

UNITED STATES PATENT AND TRADEMARK OFFICE

Commissioner for Patents
United States Patent and Trademark Office
P.O. Box 1450
Alexandria, VA 22313-1450
www.uspto.gov

Paper No.

MARSHA BETH BREWER
P.O. Box 655
Appleton, WI 54912-0655

COPY MAILED

JAN 1 8 2007

OFFICE OF PETITIONS

In re Application of	:	
Marsha Beth Brewer	:	DECISION ON
Application No. 10/857,753	:	PETITION
Filed: May 29, 2004	:	
Title: ANIMAL FLUSH TOILET	:	
AND ASSEMBLY SYSTEM	:	

This is in response to the paper filed December 1, 2006, which is being treated as a renewed request to withdraw the holding of abandonment pursuant to 37 CFR 1.181.

The renewed petition under 37 CFR 1.181 is **GRANTED**.

The above-identified application became abandoned for failure to file a reply to the Notice to File Missing Parts of Application mailed July 26, 2004. A Notice of Abandonment was mailed on April 19, 2005.

By decision mailed December 21, 2005, the petition filed May 2, 2005 (and supplemented June 20, 2005) was dismissed pursuant to 37 CFR 1.181, and 37 CFR 1.137(a) and 1.137(b). Petitioner failed to establish non-receipt of the Office communication as required, in this instance, for withdrawal of the holding of abandonment. Moreover, as petitioner did not include payment of either petition fee under 1.137, the Office did not consider reviving the application. By decision mailed September 27, 2006, applicant continued to fail to establish non-receipt of the Office communication and also did not submit payment for consideration of the petition under 37 CFR 1.137.

On instant renewed petition, petitioner supported her showing of non-receipt of the Office communication. In addition, to stating that she had not received the Office communication, she set forth her system for handling Office communications. This evidence has been considered and found persuasive that under the facts and circumstances of this case, petitioner has shown that the Office communication mailed July 26, 2004 was not received at the correspondence address of record.

In view thereof, the notice of abandonment mailed April 19, 2005 is hereby **VACATED**, and the holding of abandonment is hereby **WITHDRAWN**.

The petition under § 1.181 is **GRANTED**.

No fee is required on petition under § 1.181.

The Office of Initial Patent Examination (OIPE) has been advised of this decision. The application file is, thereby, forwarded to OIPE's technical support staff to withdraw the holding of abandonment and for processing of applicant's response to the Notice. A response to the Notice to File Missing Parts of Application was filed on June 20, 2005.

Telephone inquiries related to this decision should be directed to the undersigned at (571) 272 - 3219.

Nancy Johnson
Senior Petitions Attorney
Office of Petitions

UNITED STATES PATENT AND TRADEMARK OFFICE

Commissioner for Patents
United States Patent and Trademark Office
P.O. Box 1450
Alexandria, VA 22313-1450
www.uspto.gov

MARSHA BETH BREWER
P.O. BOX 655
APPLETON WI 54912-0655

COPY MAILED

JAN 04 2010

In re Application of Marsha Beth Brewer Application No. 10/857,753 Filed: May 29, 2004 For: ANIMAL FLUSH TOILET AND ASSEMBLY SYSTEM	: : : : : :	DECISION ON PETITION

This is a decision on the petition, filed October 19, 2009, which is being treated under 37 CFR 1.181(a) to Withdraw Holding of Abandonment.

The petition under 37 CFR 1.181(a) is **GRANTED**.

The application was held abandoned for failure to timely reply to the Final Rejection mailed January 29, 2009. A Notice of Abandonment was mailed on September 16, 2009.

The petition states that a reply was timely submitted on April 29, 2009. However, the Reply was incorrectly coded by the USPTO on April 29, 2009. A review of Office records indicates receipt of the above.

In view of the above, the holding of abandonment is hereby withdrawn and the application restored to pending status.

Telephone inquiries concerning this decision should be directed to the undersigned at (571) 272-3208.

This matter is being referred to Technology Center AU 3643 for appropriate action by the Examiner in the normal course of business on the reply received April 29, 2009.

/KOC/
Karen Creasy
Petitions Examiner
Office of Petitions

UNITED STATES PATENT AND TRADEMARK OFFICE

UNITED STATES DEPARTMENT OF COMMERCE
United States Patent and Trademark Office
Address: COMMISSIONER FOR PATENTS
P.O. Box 1450
Alexandria, Virginia 22313-1450
www.uspto.gov

Tanya A. Arenson
MEDLEN & CARROLL, LLP
Suite 350
101 Howard Street
San Francisco, CA 94105

Mail Date: 04/21/2010

Applicant	: Ingo H. Heilmann	: DECISION ON REQUEST FOR
Patent Number	: 7655833	: RECALCULATION of PATENT
Issue Date	: 02/02/2010	: TERM ADJUSTMENT IN VIEW
Appliction No	: 10/857,765	: OF WYETH AND NOTICE OF INTENT TO
Filed	: 05/28/2004	: ISSUE CERTIFICATE OF CORRECTION
		:

The Request for Recalculation is **GRANTED** to the extent indicated.

The patent term adjustment has been determined to be **982** days. The USPTO will *sua sponte* issue a certificate of correction reflecting the amount of PTA days determined by the recalculation.

Prior to the issuance of the certificate of correction, the USPTO will afford patentee an opportunity to be heard and request reconsideration. Accordingly, patentee has **one month or thirty (30) days**, whichever is longer, to file a request for reconsideration of this patent term adjustment calculation. See 35 U.S.C. 154(b)(3)(B)(ii) and 37 CFR 1.322(a)(4). No extensions of time will be granted under 37 CFR 1.136.

Patentee should use document code PET.OP if electronically filing a request for reconsideration of this patent term adjustment calculation. The patentee must also include the information required by 37 CFR 1.705(b)(2) and the fee required by 37 CFR 1.18(e). If patentee does not file a timely request for reconsideration of this patent term adjustment calculation including the information required by 37 CFR 1.705(b)(2) and the fee required by 37 CFR 1.18(e), the USPTO will issue a certificate of correction reflecting the PTA determination noted above.

Patentee should be aware that in order to preserve the right to review in the United States District Court for the District of Columbia of the USPTO patent term adjustment determination, patentee must ensure that he or she also take the steps required under 35 U.S.C. 154(b)(4)(A) in a timely manner. Nothing in the request for recalculation should be construed as providing an alternative time frame for commencing a civil action under 35 U.S.C. 154(b)(4)(A).

Any questions concerning this decision should be directed to the Office of Patent Legal Administration at 571-272-7702.

UNITED STATES PATENT AND TRADEMARK OFFICE

Commissioner for Patents
United States Patent and Trademark Office
P.O. Box 1450
Alexandria, VA 22313-1450
www.uspto.gov

TOWNSEND AND TOWNSEND AND CREW, LLP
TWO EMBARCADERO CENTER
EIGHTH FLOOR
SAN FRANCISCO, CA 94111-3834

MAILED

MAY 1 2 2005

Technology Center 2100

In re Application of: KANEKO, Seiji
Attorney Docket No.: 16869P-116800US
Application No. 10/857,772
Filed: May 28, 2004
For: VERSION MANAGEMENT SYSTEM, VERSION MANAGEMENT SERVER DEVICE, AND STORAGE DEVICE CONTROL UNIT

DECISION ON PETITION TO MAKE SPECIAL (ACCELERATED EXAMINATION) UNDER M.P.E.P. §708.02 (VIII)

This is a response to the petition filed February 11, 2005, under 37 C.F.R. §1.102(d) and M.P.E.P. §708.02 (VIII): Accelerated Examination, to make the above-identified application special.

The Petition is **DISMISSED**.

M.P.E.P. §708.02, Section VIII, which sets out the prerequisites for a grantable petition for Accelerated Examination under 37 C.F.R. §1.102(d) states in relevant part:

A new application (one which has not received any examination by the examiner) may be granted special status provided that applicant (and this term includes applicant's attorney or agent) complies with each of the following items:

(a) Submits a petition to make special accompanied by the fee set forth in **37 CFR 1.17(h)**;

(b) Presents all claims directed to a single invention, or if the Office determines that all the claims presented are not obviously directed to a single invention, will make an election without traverse as a prerequisite to the grant of special status;

(c) Submits a statement(s) that a pre-examination search was made, listing the field of search by class and subclass, publication, Chemical Abstracts, foreign patents, etc. The pre-examination search must be directed to the invention as claimed in the application for which special status is requested. A search made by a foreign patent office satisfies this requirement;

(d) Submits one copy each of the references deemed most closely related to the subject matter encompassed by the claims if said references are not already of record; and

(e) Submits a detailed discussion of the references, which discussion points out, with the particularity required by 37 CFR 1.111 (b) and (c), how the claimed subject matter is patentable over the references.

The Petition filed February 11, 2005 fails to adequately meet requirement (e) of the criteria set forth above. With respect to requirement (e), a complete detailed discussion of the (aforementioned most closely related) references has not been provided with the necessary specificity required under 37 CFR 1.111 (b) and (c). Specifically, Petitioner should ensure that the above discussion is directed to how the language of each of the independent claims are specifically distinguishable and patentable from the references provided in requirement (d) above. It is noted that while all independent claims recite "*a file writing section configured to write data to the checked out file in response to the data writing request*," the limitation of **a check-in processing section configured to receive said file writing section** is not recited in each of the independent claims as presented in the discussion.

Accordingly, the Petition to Make Special is **DISMISSED**.

Petitioner is given one opportunity to perfect the petition. Any request for reconsideration must be filed within TWO MONTHS of the mail date of this decision. Extensions of time under 37 CFR 1.136(a) are permitted by a declaration or statement providing the information as outlined above.

Until the renewed petition is submitted, the application will be returned to the examiner's docket to await treatment on the merits in the normal order of examination.

Brian L. Johnson
Special Program Examiner 5/3/05
Technology Center 2100
Computer Architecture, Software and Information Security
571-272-3595

SDL: 04/29/05

UNITED STATES PATENT AND TRADEMARK OFFICE

Commissioner for Patents
United States Patent and Trademark Office
P.O. Box 1450
Alexandria, VA 22313-1450
www.uspto.gov

TOWNSEND and TOWNSEND and CREW LLP
Two Embarcadero Center, 8th Floor
San Francisco, California 94111-3834

MAILED

DEC 16 2005

TECHNOLOGY CENTER 2100

In re Application of:
Seiji KANEKO
Application No. 10/857,772
Filed: May 28, 2004
For: VERSION MANAGEMENT SYSTEM, VERSION MANAGEMENT SERVER DEVICE, AND STORAGE DEVICE CONTROL UNIT

DECISION ON PETITION TO MAKE SPECIAL

This is a decision on the renewed petition, filed on July 13, 2005 under 37 C.F.R. §102(d) and M.P.E.P. § 708.02(VIII): Accelerated Examination, to make the above-identified application special.

The petition is **GRANTED**.

M.P.E.P. § 708.02, Section VIII which sets out the prerequisites for a grantable petition for Accelerated Examination under 37 C.F.R. § 102(d) states in relevant part:

> A new application (one which has not received any examination by the examiner) may be granted special status provided that applicant (and this term includes applicant's attorney or agent) complies with each of the following items:
>
> (A) Submits a petition to make special accompanied by the fee set forth in 37 CFR 1.17(h);
>
> (B) Presents all claims directed to a single invention, or if the Office determines that all the claims presented are not obviously directed to a single invention, will make an election without traverse as a prerequisite to the grant of special status;
>
> (C) Submits a statement(s) that a pre-examination search was made, listing the field of search by class and subclass, publication, Chemical Abstracts, foreign patents, etc. A search made by a foreign patent office satisfies this requirement;
>
> (D) Submits one copy each of the references deemed most closely related to the subject matter encompassed by the claims if said references are not already of record; and
>
> (E) Submits a detailed discussion of the references, which discussion points out, with the particularity required by 37 CFR 1.111 (b) and (c), how the claimed subject matter is patentable over the references.

Applicant's submission of July 13, 2005 meets all the criteria set out above. Accordingly, the petition is **GRANTED**. The application file is being forwarded to the Examiner for accelerated examination in accordance with M.P.E.P. § 708.02. If the application is subsequently allowed, it will be given priority for printing. See M.P.E.P. § 1309.

Vincent N. Trans
Special Program Examiner
Technology Center 2100
Computer Architecture, Software, and
Information Security
571-272-3613

UNITED STATES PATENT AND TRADEMARK OFFICE

COMMISSIONER FOR PATENTS
UNITED STATES PATENT AND TRADEMARK OFFICE
P.O. BOX 1450
ALEXANDRIA, VA 22313-1450
www.uspto.gov

William De Vor
c/o Nor'East Miniature Roses
P.O. Box 440
Arroyo Grande, CA 93421

COPY MAILED

FEB 0 6 2006

OFFICE OF PETITIONS

In re Application of :
Frank A. Benardella :
Application No. 10/857,788 :
Filed: May 28, 2004 :
Attorney Docket No. N/A :

ON PETITION

This is a decision on the petition under 37 CFR 1.137(b), filed on November 9, 2005, to revive the above-identified application.

The Petition is **DISMISSED**.

A grantable petition under 37 CFR 1.137(b) must be accompanied by: (1) the required reply, unless previously filed; (2) the petition fee as set forth in 37 CFR 1.17(m); (3) a statement that the entire delay in filing the required reply from the due date for the reply until the filing of a grantable petition pursuant to 37 CFR 1.137(b) was unintentional; and (4) any terminal disclaimer (and fee as set forth in 37 CFR 1.20(d)) required by 37 CFR 1.137(d). Where there is a question as to whether either the abandonment or the delay in filing a petition under 37 CFR 1.137 was unintentional, the Commissioner may require additional information. See MPEP 711.03(c)(III)(C) and (D). The instant petition lacks item(s) (3).

The instant petition appears to be filed on behalf of the assignee; however, the petition does not comply with the requirements of 37 CFR 3.73(b). 37 CFR 3.73(b) provides that: (1) when an assignee seeks to take action in a matter before the Office, the assignee must establish its ownership of the property to the satisfaction of the Commissioner; (2) ownership is established by submitting to the Office, in the Office file related to the matter in which action is sought to be taken, documentary evidence of a chain of title from the original owner to the assignee (*e.g.*, copy of an executed assignment submitted for recording) or by specifying (*e.g.*, reel and frame number) where such evidence is recorded in the Office; (3) the submission establishing ownership must be signed by a party authorized to act on behalf of the assignee; and (4) documents submitted to establish ownership may be required to be recorded as a condition to permitting the assignee to take action in a matter pending before the Office. A blank Statement under 37 CFR 3.73(b) is enclosed with this decision.

Any request for reconsideration of this decision must be submitted within **TWO (2) MONTHS** from the mail date of this decision. Extensions of time under 37 CFR 1.136(a) are permitted. The reconsideration request should include a cover letter entitled "Renewed Petition under 37 CFR 1.137(b)." This is **not** a final agency action within the meaning of 5 U.S.C. § 704.

Further correspondence with respect to this matter should be addressed as follows:

By Mail: Mail Stop PETITIONS
Commissioner for Patents
Post Office Box 1450
Alexandria, VA 22313-1450

By Hand: Customer Service Window
Randolph Building
401 Dulany Street
Alexandria, VA 22314

By Fax: (571) 273-8300
ATTN: Office of Petitions

Telephone inquiries concerning this decision should be directed to the undersigned at (571) 272-3226.

Andrea Smith
Petitions Examiner
Office of Petitions

Enclosure: Blank Statement under 37 CFR 3.73(b)

Privacy Act Statement

The **Privacy Act of 1974 (P.L. 93-579)** requires that you be given certain information in connection with your submission of the attached form related to a patent application or patent. Accordingly, pursuant to the requirements of the Act, please be advised that: (1) the general authority for the collection of this information is 35 U.S.C. 2(b)(2); (2) furnishing of the information solicited is voluntary; and (3) the principal purpose for which the information is used by the U.S. Patent and Trademark Office is to process and/or examine your submission related to a patent application or patent. If you do not furnish the requested information, the U.S. Patent and Trademark Office may not be able to process and/or examine your submission, which may result in termination of proceedings or abandonment of the application or expiration of the patent.

The information provided by you in this form will be subject to the following routine uses:

1. The information on this form will be treated confidentially to the extent allowed under the Freedom of Information Act (5 U.S.C. 552) and the Privacy Act (5 U.S.C 552a). Records from this system of records may be disclosed to the Department of Justice to determine whether disclosure of these records is required by the Freedom of Information Act.
2. A record from this system of records may be disclosed, as a routine use, in the course of presenting evidence to a court, magistrate, or administrative tribunal, including disclosures to opposing counsel in the course of settlement negotiations.
3. A record in this system of records may be disclosed, as a routine use, to a Member of Congress submitting a request involving an individual, to whom the record pertains, when the individual has requested assistance from the Member with respect to the subject matter of the record.
4. A record in this system of records may be disclosed, as a routine use, to a contractor of the Agency having need for the information in order to perform a contract. Recipients of information shall be required to comply with the requirements of the Privacy Act of 1974, as amended, pursuant to 5 U.S.C. 552a(m).
5. A record related to an International Application filed under the Patent Cooperation Treaty in this system of records may be disclosed, as a routine use, to the International Bureau of the World Intellectual Property Organization, pursuant to the Patent Cooperation Treaty.
6. A record in this system of records may be disclosed, as a routine use, to another federal agency for purposes of National Security review (35 U.S.C. 181) and for review pursuant to the Atomic Energy Act (42 U.S.C. 218(c)).
7. A record from this system of records may be disclosed, as a routine use, to the Administrator, General Services, or his/her designee, during an inspection of records conducted by GSA as part of that agency's responsibility to recommend improvements in records management practices and programs, under authority of 44 U.S.C. 2904 and 2906. Such disclosure shall be made in accordance with the GSA regulations governing inspection of records for this purpose, and any other relevant (*i.e.*, GSA or Commerce) directive. Such disclosure shall not be used to make determinations about individuals.
8. A record from this system of records may be disclosed, as a routine use, to the public after either publication of the application pursuant to 35 U.S.C. 122(b) or issuance of a patent pursuant to 35 U.S.C. 151. Further, a record may be disclosed, subject to the limitations of 37 CFR 1.14, as a routine use, to the public if the record was filed in an application which became abandoned or in which the proceedings were terminated and which application is referenced by either a published application, an application open to public inspection or an issued patent.
9. A record from this system of records may be disclosed, as a routine use, to a Federal, State, or local law enforcement agency, if the USPTO becomes aware of a violation or potential violation of law or regulation.

PTO/SB/96 (12-05)
Approved for use through 07/31/2006. OMB 0651-0031
U.S. Patent and Trademark Office; U.S. DEPARTMENT OF COMMERCE
Under the Paperwork Reduction Act of 1995, no persons are required to respond to a collection of information unless it displays a valid OMB control number.

STATEMENT UNDER 37 CFR 3.73(b)

Applicant/Patent Owner: _____

Application No./Patent No./Control No.: _____ Filed/Issue Date: _____

Entitled: [ ]

_____, a _____
(Name of Assignee) (Type of Assignee: corporation, partnership, university, government agency, etc.)

states that it is:

1. ☐ the assignee of the entire right, title, and interest; or

2. ☐ an assignee of less than the entire right, title and interest
(The extent (by percentage) of its ownership interest is _____%)

in the patent application/patent identified above by virtue of either:

A. ☐ An assignment from the inventor(s) of the patent application/patent identified above. The assignment was recorded in the United States Patent and Trademark Office at Reel _____, Frame _____, or a true copy of the original assignment is attached.

OR

B. ☐ A chain of title from the inventor(s), of the patent application/patent identified above, to the current assignee as follows:

1. From: _____ To: _____
The document was recorded in the United States Patent and Trademark Office at
Reel _____, Frame _____, or for which a copy thereof is attached.

2. From: _____ To: _____
The document was recorded in the United States Patent and Trademark Office at
Reel _____, Frame _____, or for which a copy thereof is attached.

3. From: _____ To: _____
The document was recorded in the United States Patent and Trademark Office at
Reel _____, Frame _____, or for which a copy thereof is attached.

☐ Additional documents in the chain of title are listed on a supplemental sheet.

As required by 37 CFR 3.73(b)(1)(i), the documentary evidence of the chain of title from the original owner to the assignee was, or concurrently is being, submitted for recordation pursuant to 37 CFR 3.11.

[NOTE: A separate copy (*i.e.*, a true copy of the original assignment document(s)) must be submitted to Assignment Division in accordance with 37 CFR Part 3, to record the assignment in the records of the USPTO. See MPEP 302.08]

The undersigned (whose title is supplied below) is authorized to act on behalf of the assignee.

_____	_____
Signature	Date
_____	_____
Printed or Typed Name	Telephone Number
_____	
Title	

This collection of information is required by 37 CFR 3.73(b). The information is required to obtain or retain a benefit by the public which is to file (and by the USPTO to process) an application. Confidentiality is governed by 35 U.S.C. 122 and 37 CFR 1.11 and 1.14. This collection is estimated to take 12 minutes to complete, including gathering, preparing, and submitting the completed application form to the USPTO. Time will vary depending upon the individual case. Any comments on the amount of time you require to complete this form and/or suggestions for reducing this burden, should be sent to the Chief Information Officer, U.S. Patent and Trademark Office, U.S. Department of Commerce, P.O. Box 1450, Alexandria, VA 22313-1450. DO NOT SEND FEES OR COMPLETED FORMS TO THIS ADDRESS. **SEND TO: Commissioner for Patents, P.O. Box 1450, Alexandria, VA 22313-1450.**

If you need assistance in completing the form, call 1-800-PTO-9199 and select option 2.

UNITED STATES PATENT AND TRADEMARK OFFICE

Commissioner for Patents
United States Patent and Trademark Office
P.O. Box 1450
Alexandria, VA 22313-1450
www.uspto.gov

William De Vor
c/o Nor'East Miniature Roses
P.O. Box 440
Arroyo Grande, CA 93421

COPY MAILED
MAY 2 3 2006
OFFICE OF PETITIONS

In re Application of	:	
Frank A. Benardella	:	
Application No. 10/857,788	:	ON PETITION
Filed: May 28, 2004	:	
Attorney Docket No. N/A	:	

This is a decision on the renewed petition under 37 CFR 1.137(b), filed by facsimile transmission on February 16, 2006 and supplemented on May 18, 2006, to revive the above-identified application.

The application became abandoned for failure to timely reply to the Notice of Allowance and Fee(s) Due mailed May 13, 2005.

The petition satisfies the requirements of 37 CFR 1.137(b) in that petitioner has supplied (1) the reply in the form $550 for the issue fee and $300 for the publication fee; (2) the petition fee of $750; and (3) an adequate statement of unintentional delay. Therefore, the petition is **GRANTED**.

This application file is being referred to the Office of Publications for further processing into a patent.

Telephone inquiries concerning this decision should be directed to the undersigned at (571) 272-3226.

Andrea Smith
Petitions Examiner
Office of Petitions

UNITED STATES PATENT AND TRADEMARK OFFICE

COMMISSIONER FOR PATENTS
UNITED STATES PATENT AND TRADEMARK OFFICE
P.O. BOX 1450
ALEXANDRIA, VA 22313-1450
WWW.USPTO.GOV

Paper No.

JAMES M. STOVER
TERADATA CORPORATION
2835 MIAMI VILLAGE DRIVE
MIAMISBURG OH 45342

COPY MAILED

JUN 11 2008

OFFICE OF PETITIONS

In re Application of
Sorana Rabinovici et al.
Application No. 10/857,790
Filed: May 28, 2004
Attorney Docket No. 11555
Title: IMPROVED SYSTEM AND METHOD FOR PERFORMING DISK WRITE OPERATIONS BY WRITING TO A DATA DEPOT PRIOR TO AN IN-PLACE WRITE

DECISION ON PETITION PURSUANT TO 37 C.F.R. § 1.137(B)

This is a decision on the petition filed September 14, 2007, pursuant to 37 C.F.R. § 1.137(b), to revive the above-identified application.

The petition under 37 C.F.R. § 1.137(b) is **GRANTED**.

The above-identified application became abandoned for failure to submit the issue fee in a timely manner in reply to the Notice of Allowance and Issue Fee Due, mailed May 4, 2007, which set a shortened statutory period for reply of three months. No extensions of time are permitted for transmitting issue fees[1]. Accordingly, the above-identified application became abandoned on August 5, 2007. A Notice of Abandonment was mailed on August 28, 2007.

A grantable petition pursuant to 37 C.F.R. § 1.137(b) must be accompanied by:

(1) The reply required to the outstanding Office action or notice, unless previously filed;

1 See MPEP § 710.02(e).

(2) The petition fee as set forth in 37 C.F.R. § 1.17(m);
(3) A statement that the entire delay in filing the required reply from the due date for the reply until the filing of a grantable petition pursuant to this paragraph was unintentional. The Commissioner may require additional information where there is a question whether the delay was unintentional, and;
(4) Any terminal disclaimer (and fee as set forth in 37 C.F.R. § 1.20(d)) required pursuant to paragraph (d) of this section.

With this petition, Petitioner has included the petition fee, the issue fee, and the proper statement of unintentional delay. As such, the first three requirements of Rule 1.137(b) have been met.

The fourth requirement of Rule 1.137(b) is not applicable, as a terminal disclaimer is not required.

It is noted that although this petition was executed by an attorney of record, the address listed on the petition differs from the address of record. The application file does not indicate a change of correspondence address has been filed in this case, although the address given on the petition differs from the address of record. If Petitioner desires to receive future correspondence regarding this application, the change of correspondence address must be submitted. A courtesy copy of this decision will be mailed to Petitioner. However, all future correspondence will be directed to the address of record until such time as appropriate instructions are received to the contrary. Petitioner will not receive future correspondence related to this application unless Change of Correspondence Address, Patent Form (PTO/SB/122) is submitted for the above-identified application. For Petitioner's convenience, a blank Change of Correspondence Address, Patent Form (PTO/SB/122), may be found at http://www.uspto.gov/web/forms/sb0122.pdf.

Pursuant to this decision, the Office of Patent Publication will be notified of this decision so that the present application can be processed into a patent.

Petitioner may find it beneficial to view Private PAIR within a fortnight of the present decision to ensure that the revival has been acknowledged by the Office of Patent Publication in response to this decision. It is noted that all inquiries with regard to

any failure of that change in status should be directed to the Office of Patent Publication where that change of status must be effected - **the Office of Petitions cannot effectuate a change of status.**

Telephone inquiries regarding *this decision* should be directed to the undersigned at (571) 272-3225[2]. All other inquiries concerning the status of the application should be directed to the Office of Patent Publication at 571-272-4200.

/Paul Shanoski/
Paul Shanoski
Senior Attorney
Office of Petitions

cc: JAMES M. STOVER
NCR CORPORATION
1700 SOUTH PATTERSON BLVD., WHQ3
DAYTON, OH 45479

---

2 Petitioner will note that all practice before the Office should be in writing, and the action of the Office will be based exclusively on the written record in the Office. See 37 C.F.R. § 1.2. As such, Petitioner is reminded that no telephone discussion may be controlling or considered authority for any further action(s) of Petitioner.

UNITED STATES PATENT AND TRADEMARK OFFICE

Commissioner for Patents
United States Patent and Trademark Office
P.O. Box 1450
Alexandria, VA 22313-1450
www.uspto.gov

COPY MAILED

FEB 13 2007

OFFICE OF PETITIONS

KAGAN BINDER, PLLC
SUITE 200, MAPLE ISLAND BUILDING
221 MAIN STREET NORTH
STILLWATER MN 55082

ON PETITION

In re Application of
Maria Teodorcyzk et al.
Application No. 10/857,795
Filed: May 28, 2004
Attorney Docket No. LSI0063/US/2

This is a decision on the petition under 37 CFR 1.137(b), filed August 21, 2006, to revive the above-identified application.

The petition is **DISMISSED**.

Any request for reconsideration of this decision must be submitted within TWO (2) MONTHS from the mail date of this decision. Extensions of time under 37 CFR 1.136(a) are permitted. The reconsideration request should include a cover letter entitled "Renewed Petition under 37 CFR 1.137(b)." This is **not** a final agency action within the meaning of 5 U.S.C. § 704.

The application became abandoned for failure submit the issue fee and publication fee in a timely manner in reply to the Notice of Allowance and Fee(s) Due, mailed May 9, 2006, which set a statutory period for reply of three (3) months. Accordingly, the application became abandoned on August 10, 2006.

A grantable petition under 37 CFR 1.137(b) must be accompanied by: (1) the required reply, unless previously filed; (2) the petition fee as set forth in 37 CFR 1.17(m); (3) a statement that the entire delay in filing the required reply from the due date for the reply until the filing of a grantable petition pursuant to 37 CFR 1.137(b) was unintentional; and (4) any terminal disclaimer (and fee as set forth in 37 CFR 1.20(d)) required by 37 CFR 1.137(d). Where there is a question as to whether either the abandonment or the delay in filing a petition under 37 CFR 1.137 was unintentional, the Commissioner may require additional information. See MPEP 711.03(c)(II)(C) and (D). The instant petition lacks item(s): Item (1)

According to 35 U.S.C. 41(a)(7) and 151 each require payment of the issue fee as a condition of reviving an application abandoned or patent lapse for failure to pay the issue fee. Therefore, the filing of a continuing application without payment of the issue fee or any outstanding balance thereof is **not** an acceptable reply in an application abandoned or patent lapsed for failure to pay the issue fee or any portion thereof. See MPEP 711.03(c)(II)(A)(1)

Petitioner is advised that, once submitted, the issue fee cannot be refunded. If, however, this application is again allowed, petitioner may request that it be applied towards the issue fee required by the new Notice of Allowance.

An extension of time under 37 CFR 1.136 must be filed prior to the expiration of the maximum extendable period for reply. See In re Application of S., 8 USPQ2d 1630, 1631 (Comm'r Pats. 1988). Since the $110.00 extension of time fee submitted with the petition on August 21,2006 was subsequent to the maximum extendable period for reply, this fee is unnecessary and will be credited to petitioner's deposit account.

Further correspondence with respect to this matter should be addressed as follows:

By Mail: Mail Stop PETITION
Commissioner for Patents
P. O. Box 1450
Alexandria, VA 22313-1450

By hand: U. S. Patent and Trademark Office
Customer Service Window, Mail Stop Petitions
Randolph Building
401 Dulany Street
Alexandria, VA 22314

The centralized facsimile number is **(571) 273-8300.**

Telephone inquiries concerning this decision should be directed to Terri Williams at (571) 272-2991.

Diana Walsh for
Amelia Au
Petition Examiner
Office of Petitions

UNITED STATES PATENT AND TRADEMARK OFFICE

Commissioner for Patents
United States Patent and Trademark Office
P.O. Box 1450
Alexandria, VA 22313-1450
www.uspto.gov

PHILIP S. JOHNSON
JOHNSON & JOHNSON
ONE JOHNSON & JOHNSON PLAZA
NEW BRUNSWICK NJ 08933-7003

COPY MAILED

FEB 27 2008

OFFICE OF PETITIONS

In re Application of	:	
Maria Teodorcyzk et al.	:	
Application No. 10/857,795	:	DECISION ON PETITION
Filed: May 28, 2004	:	
Attorney Docket No. LFS0121USCNT	:	

This is a decision on the renewed petition under the unintentional provisions of 37 CFR 1.137(b), filed February 27, 2007, to revive the above-identified application.

The petition is **GRANTED**.

This application became abandoned for failure to timely pay the issue and publication fees on or before May 9, 2006, as required by the Notice of Allowance and Fee(s) Due, mailed August 9, 2006. Accordingly, the date of abandonment of this application is August 10, 2006. The Notice of Abandonment was mailed August 29, 2006.

The petition satisfies the requirements of 37 CFR 1.137(b) in that petitioner has supplied (1) the reply in the form of payment of the issue fee of $1,400 and the publication fee of $300, (2) the petition fee of $1,500; and (3) a proper statement of unintentional delay.

Telephone inquiries concerning this decision should be directed to Terri Williams at (571) 272-2991.

This application is being referred to Technology Center AU 1655 for processing of the RCE filed August 21, 2006.

Liana Walsh
Petitions Examiner

UNITED STATES PATENT AND TRADEMARK OFFICE

Commissioner for Patents
United States Patent and Trademark Office
P.O. Box 1450
Alexandria, VA 22313-1450
www.uspto.gov

GENERAL ELECTRIC COMPANY
GE AVIATION
ONE NEUMANN WAY MD H17
CINCINNATI OH 45215

COPY MAILED
NOV 28 2008
OFFICE OF PETITIONS

In re Application of	:	
Przytulski et al.	:	
Application No. 10/857,820	:	DECISION ON PETITION
Filed: June 1, 2004	:	
Attorney Docket No. 136497	:	

This is a decision on the petition under the unintentional provisions of 37 CFR 1.137(b), filed June 9, 2008, to revive the above-identified application.

The petition is **GRANTED**.

The application became abandoned for failure to reply in a timely manner to the non-final Office action mailed March 16, 2007, which set a shortened statutory period for reply of three (3) months. No extensions of time under the provisions of 37 CFR 1.136(a) were obtained. Accordingly, the application became abandoned on June 17, 2007. A Notice of Abandonment was mailed October 12, 2007.

The petition satisfies the requirements of 37 CFR 1.137(b) in that petitioner has supplied (1) the reply in the form of an Amendment, (2) the petition fee of $1,540.00, and (3) an adequate statement of unintentional delay.

It is not apparent whether the statement of unintentional delay was signed by a person who would have been in a position of knowing that the **entire** delay in filing the required reply from the due date for the reply until the filing of a grantable petition pursuant to 37 CFR 1.137(b) was unintentional. Nevertheless, in accordance with 37 CFR 10.18, the statement is accepted as constituting a certification of unintentional delay. However, in the event that petitioner has no knowledge that the delay was unintentional, petitioner must make such an inquiry to ascertain that, in fact, the delay was unintentional. If petitioner discovers that the delay was intentional, petitioner must notify the Office.

It is not apparent whether the person signing the instant petition was ever given a power of attorney or authorization of agent to prosecute this patent. In accordance with 37 CFR 1.34(a), the signature appearing on the petition shall constitute a representation to the United States Patent and Trademark Office that he/she is authorized to represent the particular party in whose behalf he/she acts. While, a courtesy copy of this decision is being mailed to the person signing the instant petition, all future correspondence will be directed to the address currently of record until such time as appropriate instructions are received to the contrary.

Telephone inquiries concerning this decision should be directed to Joan Olszewski at (571) 272-7751.

This application is being referred to Technology Center AU 3745 for appropriate action by the Examiner in the normal course of business on the reply received.

/Liana Walsh/
Liana Walsh
Petitions Examiner
Office of Petitions

cc: Andrew L. Oltmans
100 Pine Street
Harrisburg PA 17108

UNITED STATES PATENT AND TRADEMARK OFFICE

Commissioner for Patents
United States Patent and Trademark Office
P.O. Box 1450
Alexandria, VA 22313-1450
www.uspto.gov

LAW OFFICES OF RONALD SHEA
2450 COUNTRY HILLS RD
APT. 192
BREA, CA 92821

COPY MAILED

JUL 0 6 2007

OFFICE OF PETITIONS

In re Application of
Joseph C. Fjelstad, et al.
Application No. 10/857,830
Filed: June 1, 2004
Attorney Docket No. SIPI.P119

DECISION ON REQUEST FOR REVOCATION OF POWER OF ATTORNEY

This is a decision on the Request to Revoke the attorney or agent of record under 37 C.F.R. § 1.36(a), filed June 4, 2007.

The request is **NOT APPROVED**.

A power of attorney, pursuant to § 1.32(b), may be revoked at any stage in the proceeding of a case by an applicant for patent (§ 1.41(b)) or an assignee of the entire interest of the applicant under § 3.71(b). Fewer than all of the applicants (or by fewer than the assignee of the entire interest of the applicant) may only revoke the power of attorney upon a showing of sufficient cause, and payment of the petition fee set forth § 1.17(h). For the assignee to take action a proper statement under § 3.73(b) is required.

The request cannot be approved because the statement under 3.73(b) is not proper.

In order to request or take action in a patent matter, the assignee must establish its ownership of the patent to the satisfaction of the Director. In this regard, a Statement under 37 CFR 3.73(b) must have either: (i) documentary evidence of a chain of title from the original owner to the assignee (*e.g.*, copy of an executed assignment), and a statement affirming that the documentary evidence of the chain of title from the original owner to the assignee was or concurrently is being submitted for recordation pursuant to § 3.11; or (ii) a statement specifying where documentary evidence of a chain of title from the original owner to the assignee is recorded in the assignment records of the Office (*e.g.*, reel and frame number). The power of attorney filed on April 13, 2007 does not include the reel and frame number or a copy of the assignment.

All future communications from the Office will continue to be directed to the above-listed address until otherwise notified by applicant.

Telephone inquiries concerning this decision should be directed to undersigned at 571-272-1642.

April M. Wise
Petitions Examiner
Office of Petitions

UNITED STATES PATENT AND TRADEMARK OFFICE

Commissioner for Patents
United States Patent and Trademark Office
P.O. Box 1450
Alexandria, VA 22313-1450
www.uspto.gov

SHEMWELL MAHAMEDI LLP
4880 STEVENS CREEK BOULEVARD
SUITE 201
SAN JOSE, CA 95129

COPY MAILED

JUL 06 2007

OFFICE OF PETITIONS

In re Application of	:	
Joseph C. Fjelstad, et al.	:	
Application No. 10/857,830	:	DECISION ON PETITION
Filed: June 1, 2004	:	TO WITHDRAW
Attorney Docket No. SIPI.P119	:	FROM RECORD
	:	

This is a decision on the Request to Withdraw as attorney or agent of record under 37 C.F.R. § 1.36(b), filed December 11, 2006.

The request is **APPROVED**.

A grantable request to withdraw as attorney/agent of record must be signed by every attorney/agent seeking to withdraw or contain a clear indication that one attorney is signing on behalf of another/others. A request to withdraw will not be approved unless at least 30 (thirty) days would remain between the date of approval and the later of the expiration date of a time to file a response or the expiration date of the maximum time period which can be extended under 37 C.F.R. § 1.136(a).

The request was signed by Charles E. Shemwell on behalf of all attorneys of record who are associated with Customer No. 30554.

All attorneys/agents associated with the Customer No. 30554 have been withdrawn.

Applicant is reminded that there is no attorney of record at this time.

The request to change the correspondence of record is not acceptable as the requested correspondence address is not that of: (1) the first named signing inventor; or (2) an intervening assignee of the entire interest under 37 C.F.R 3.71. All future communications from the Office will be directed to the first named signing inventor at the first copied address below until otherwise properly notified by the applicant.

In order to request or take action in a patent matter, the assignee must establish its ownership of the patent to the satisfaction of the Director. In this regard, a Statement under 37 CFR 3.73(b) must have either: (i) documentary evidence of a chain of title from the original owner to the assignee (*e.g.*, copy of an executed assignment), and a statement affirming that the documentary evidence of the chain of title from the original owner to the assignee was or concurrently is being submitted for recordation pursuant to § 3.11; or (ii) a statement specifying where documentary evidence of a chain of title from the original owner to the assignee is recorded in the assignment records of the Office (*e.g.*, reel and frame number). The power of attorney filed on April 13, 2007 does not include the reel and frame number or a copy of the assignment.

There is an outstanding Office action mailed June 12, 2007 that requires a reply from the applicant.

Telephone inquiries concerning this decision should be directed to undersigned at 571-272-1642.

April M. Wise
Petitions Examiner
Office of Petitions

cc: JOSPEH C. FJEDSTAD
28128 231ST PLACE SE
MAPLE VALLEY, WA 98038

cc: RONALD R. SHEA
6244 ROYAL OAK COURT
SAN JOSE, CA 95123

UNITED STATES PATENT AND TRADEMARK OFFICE

Commissioner for Patents
United States Patent and Trademark Office
P.O. Box 1450
Alexandria, VA 22313-1450
www.uspto.gov

SCHWABE WILLIAMSON & WYATT, P.C.
PACWEST CENTER, SUITE 1900
1211 S.W. FIFTH AVENUE
PORTLAND, OR 97204

COPY MAILED

DEC 1 0 2008

OFFICE OF PETITIONS

ON PETITION

In re Application of :
Adoram Erell et al :
Application No. 10/857,848 :
Filed: June 2, 2004 :
Attorney Docket No. MP1507 151673 :

This is a decision on the petition under the unintentional provisions of 37 CFR 1.137(b), filed October 20, 2008, to revive the above-identified application.

The petition is **GRANTED.**

The application became abandoned for failure to timely file a reply within the meaning of 37 CFR 1.113 to the final Office action of March 20, 2008. The proposed reply required for consideration of a petition to revive must be a Notice of Appeal (and appeal fee required by 37 CFR 41.20(b)(2), an amendment that prima facie places the application in condition for allowance, a Request for Continued Examination and submission (37 CFR 1.114), or the filing of a continuing application under 37 CFR 1.53(b). See MPEP 711.03(c)(III)(A)(2). No extension of time pursuant to the provisions of 37 CFR 1.136(a) was obtained. Accordingly, the date of abandonment of this application is June 21, 2008.

The petition satisfies the requirements of 37 CFR 1.137(b) in that petitioner has supplied (1) the reply in the form of a Request for Continued Examination (RCE) and fee of $810 and the submission required by 37 CFR 1.114; (2) the petition fee of $1620; and (3) a proper statement of unintentional delay.

Telephone inquiries concerning this decision should be directed to the undersigned at (571) 272-3210.

This application is being referred to Technology Center AU 2626 for processing of the RCE and for appropriate action by the Examiner in the normal course of business on the amendment submitted in accordance with 37 CFR 1.114.

Irvin Dingle
Petition Examiner
Office of Petitions

UNITED STATES PATENT AND TRADEMARK OFFICE

Commissioner for Patents
United States Patent and Trademark Office
P.O. Box 1450
Alexandria, VA 22313-1450
www.uspto.gov

MAIL

APR 28 2008
DIRECTOR'S OFFICE
TECHNOLOGY CENTER 2600

OBLON, SPIVAK, MCCLELLAND,
MAIER & NEUSTADT, P.C.
1940 DUKE STREET
ALEXANDRIA, VA 22314

In re Application of :
UCHINO, KATSUHIDE et al :
Application No. 10/857,857 : DECISION ON REQUEST TO
Filed: June 02, 2004 : WITHDRAW FROM RECORD
For: **PIXEL CIRCUIT AND DISPLAY DEVICE** :

This is a decision on the petition, filed March 31, 2008, under 37 CFR 1.181(a)(3) for consideration of a reference included with an Information Disclosure Statement filed March 12, 2008.

A review of the application file reveals that the information disclosure listing submitted on March 12, 2008, has been considered by the examiner. An initialed Form PTO-1449 was attached to the Miscellaneous Communication mailed March 28, 2008. Attached to this decision is a copy of the initialed Form PTO-1449.

Accordingly, Petitioner's request is **Dismissed as Moot**.

Michael Horabik
Quality Assurance Specialist
Technology Center 2600
Communications

Enclosure: Initialed Form PTO-1449

UNITED STATES PATENT AND TRADEMARK OFFICE

Commissioner for Patents
United States Patent and Trademark Office
P.O. Box 1450
Alexandria, VA 22313-1450
www.uspto.gov

VYSIS, INC.
LAW DEPARTMENT
3100 WOODCREEK DRIVE
DOWNERS GROVE, IL 60515

COPY MAILED

FEB 0 6 2006

OFFICE OF PETITIONS

In re Application of	:
Irina A. Sokolova et al	:DECISION ON PETITION
Application No. 10/857,859	:UNDER 37 CFR 1.78(a)(3)
Filed: June 2, 2004	:
Attorney Docket No. V0086USP1	:

This is a decision on the petition, filed November 16, 2005, which is being treated as a petition under 37 CFR 1.78(a)(3) to accept an unintentionally delayed claim under 35 U.S.C. § 120 for the benefit of prior-filed nonprovisional Application No. 10/457,639, filed June 9, 2003, as set forth in the concurrently filed amendment.

The petition is **DISMISSED AS MOOT**.

A petition under 37 CFR § 1. 78(a)(3) is only applicable to those applications filed on or after November 29, 2000.

The petition under CFR § 1.78(a)(3) was accompanied by an amendment to the first sentence of the specification following the title to include a reference to the above-noted, prior-filed application. While a reference to prior-filed Application No. 10/457,639 was not included in an ADS or in the first sentence of the specification following the title as required by 37 CFR 1.78(a)(iii), reference nevertheless was made in the transmittal letter filed with the present application.

The current procedure where a claim for priority under 37 CFR § 1.78(a)(3) is not included in the first sentence of the specification or in an ADS but does appear either in the oath or declaration or a transmittal letter filed with the application and the Office notes the claim for priority, no petition will be required to accept a late claim for priority. This is because the application would have been scheduled for publication on the basis of the information concerning the claim submitted elsewhere in the application within the time period set forth in 37 CFR § 1.78(a)(2)(ii). However, on the other hand, if the USPTO does not note the claim for priority to the prior-filed application(s) set forth in the oath or declaration or transmittal letter submitted with the application, a petition will be required to accept a late claim for priority under 37 CFR §

1.78(a)(3).[1] In the instant case, the Office noted the claim for priority of the above-noted, prior-filed application in the transmittal letter filed with the application, as shown by its inclusion on the filing receipt.

In view of the above, the $1,370 petition fee submitted is unnecessary and will be refunded to petitioner's deposit account in due course.

Any questions concerning this decision on petition may be directed to the undesigned at (571) 272-3218. All other inquiries concerning either the examination procedures or status of the application should be directed to the Technology Center.

This application is being forwarded to the Examiner of Technology Center AU 1634 for examination in due course and for appropriate action on the amendment filed November 16, 2005, including consideration of the claim under 35 U.S.C. § 120 and 37 CFR 1.78(a)(2) for benefit of prior-filed Application No. 10/457,639.

Frances Hicks
Petitions Examiner
Office of Petitions

[1] *Note* MPEP 201.11 (III)(D) , pages 200-59 and 200-60 (Rev. 2. May 2004) and 66 Federal Register 67087 at 67089 (Dec. 28, 2001), effective December 28, 2001.

UNITED STATES PATENT AND TRADEMARK OFFICE

Commissioner for Patents
United States Patent and Trademark Office
P.O. Box 1450
Alexandria, VA 22313-1450
www.uspto.gov

DEKEL PATENT LTD., DAVID KLEIN
BEIT HAROF'IM
18 MENUHA VENAHALA STREET, ROOM 27
REHOVOT 76209 IL ISRAEL

COPY MAILED

MAR 0 2 2005

OFFICE OF PETITIONS

In re Application of	:
Arie Sansolo	:
Application No. 10/857,871	: DECISION GRANTING PETITION
Filed: June 2, 2004	:
Attorney Docket No: 1361SAN-US	:

This is a decision on the petition filed January 18, 2005, in response to the "Notice of Omitted Items" mailed November 15, 2004, which is treated under 37 CFR 1.182.

The instant application was filed June 2. 2004 and a filing date was accorded. However, a Notice of Omitted Items was mailed November 15, 2004 advising that Figure 5 described in the specification appeared to have been omitted.

Petitioner asserts that Figure 5 was among the papers filed on June 2, 2004, and submits, *inter alia*, a "legible" postcard receipt in evidence thereof. The postcard receipt, identifies the application and acknowledges, inter alia, that the application included five (5) sheets of drawings and bears a United States Patent and Trademark Office date-stamp of June 2, 2004. However, only four (4) sheets of drawing figures is of record and while the postcard did not specifically itemize the number of Figures, it is obvious that Figure 5 was on sheet 4. Additionally, the postcard receipt lacks any notation of non-receipt of any item listed. In view thereof, the petition is **GRANTED.**

Given the basis for granting the petition, the petition fee paid in the amount of $130.00 will be refunded in due course.

This application is being forwarded to the Office of Initial Patent Examination (OIPE) for further processing, using the application papers received in the Office on June 2, 2004 and Figure 5 submitted on petition January 18, 2005.

Telephone inquiries regarding this decision should be directed to the undersigned Petitions Attorney at (571) 272-3212.

Patricia Faison-Ball

Patricia Faison-Ball
Senior Petitions Attorney
Office of Petitions

UNITED STATES PATENT AND TRADEMARK OFFICE

APR 11 2007

Commissioner for Patents
United States Patent and Trademark Office
P.O. Box 1450
Alexandria, VA 22313-1450
www.uspto.gov

MILLEN, WHITE, ZELANO & BRANIGAN, P.C.
2200 CLARENDON BLVD.
SUITE 1400
ARLINGTON VA 22201

In re Application of	:
Johannes Platsek et al	:
Serial No.: 10/857,877	: PETITION DECISION
Filed: June 2, 2004	:
Attorney Docket No.: SCH-1774-D01	:

This is in response to the petition under 37 CFR 1.144, filed February 2, 2007, requesting withdrawal of an improper restriction requirement.

BACKGROUND

A review of the file history shows that this application was filed under 35 U.S.C. 111 on July 28, 2003, and contained, as amended, claims 51-77. In a first Office action, mailed August 22, 2006, the examiner set forth a restriction requirement, as follows:

Group I – Claims 51-57, 66-71 and 74, drawn to a method of MRI imaging with complex Ic; and

Group II – Claims 58-65, 72-72 and 75-77, drawn to a method of MRI imaging with complex Id.

The examiner identified the Groups as in a combination/subcombination relationship in that complexes of Ic contained a "saccharide moiety" as opposed to complexes of Id having a "polar radical" and that which would have separate utility. An election of species was required for whichiever group was elected.

Applicants replied on September 22, 2006, electing the compounds of Group I with traverse and a species , as required. Applicants argued that that there would be no undue burden to search both Groups of claims as they were both classified in the same class and subclass.

The examiner mailed a new Office action to applicants on November 2, 2006, acknowledging the election of Group I and the species, but maintaining the requirement, and making it Final. The examiner responded to the traverse arguing that each group of complexes were designed to target different tissues and/or organs and had different physical and chemical properties to do so. Claims 51-57, 69-71 and 74 were then rejected for obvious double patenting over SN 10/616,511 and US patents 6,641,797 or 6,676,928 in combination with 6,818,203.

This petition was filed on February 2, 2007, traversing the requirement as improper. A reply to the Office action was also filed including a terminal disclaimer concurrently, but has not been addressed by the examiner at this time.

DISCUSSION

A review of the claims shows that the claims of Group I are directed to a complex of Formula Ic, as follows:

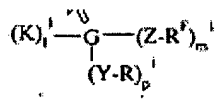

The claims of Group II are directed to complexes of Formula Id, as follows:

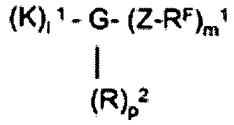

As can be seen the backbone structure of each structure is essentially the same and the only difference is in the (Y-R) and (R) groups. The R of the Y-R group is defined as an oligosaccharide (i.e. – sugar) radical; whereas the R of the second Group is defined as a polar radical or a folic acid radical or a carbon chain of 2-30 carbons, etc. Nor is R equivalent to the Y of the Y-R group.

Applicants traverse the restriction requirement arguing no undue search burden since the claims of both groups are classified identically and that the claims were previously searched in the parent application by a different examiner.

What applicants have set forth here is claims encompassing two different Markush groups based on the difference between the Y-R group and the R group. The two groups are not overlapping even though they have the same backbone structure on which classification is apparently based. The claims are properly restricted, although not as combination/subcombination as set forth by the examiner, but as two separate Markush groups. Applicants' argument regarding undue search burden is noted, but is not persuasive since the two Markush groups, although classified similarly would involve different searches beyond the initial classification as well as in the literature. In addition the complexes, as noted by the examiner, are used for different purposes which would also be a consideration for searching. A review of the parent application does not

show that the specific complexes were searched, but that MRI targeting agents generically were considered. Thus the specific complexes claimed were not searched.

DECISION

The petition is **DENIED** for the reasons set forth above.

The application will be forwarded to the examiner for consideration of applicants' reply filed February 2, 2007, and further action not inconsistent with this decision.

Should there be any questions about this decision please contact William R. Dixon, Jr., by letter addressed to Director, TC 1600, at the address listed above, or by telephone at 571-272-0519 or by facsimile sent to the general Office facsimile number, 571-273-8300.

Bruce M. Kisliuk.
Director, Technology Center 1600

UNITED STATES PATENT AND TRADEMARK OFFICE

COMMISSIONER FOR PATENTS
UNITED STATES PATENT AND TRADEMARK OFFICE
P.O. BOX 1450
ALEXANDRIA, VA 22313-1450
www.uspto.gov

MILLEN, WHITE, ZELANO & BRANIGAN, P.C.
2200 CLARENDON BLVD.
SUITE 1400
ARLINGTON VA 22201

COPY MAILED

MAR 27 2008

OFFICE OF PETITIONS

In re Application of	:
Platzek, et al.	:
Application No. 10/857,877	: DECISION ON PETITIONS
Filed: June 2, 2004	: UNDER 37 CFR 1.78(a)(3) AND (a)(6)
Attorney Docket No. SCH-1774-D01	:

This is a decision on the petitions under 37 CFR §§ 1.78(a)(3) and 1.78(a)(6), filed September 5, 2007, to accept an unintentionally delayed claim under 35 U.S.C. §§120 and 119(e) for the benefit of the prior-filed applications set forth in the concurrently filed amendment.

The petition is **DISMISSED.**

A petition for acceptance of a claim for late priority under 37 CFR §§ 1.78(a)(3) and 1.78(a)(6) is only applicable to those applications filed on or after November 29, 2000 and after the expiration of the period specified in 37 CFR §§ 1.78(a)(2)(ii) and 1.78(a)(5)(ii). In addition, the petition under 37 CFR §§ 1.78(a)(3) and 1.78(a)(6) must be accompanied by:

(1) the reference required by 35 U.S.C. §§ 120 and 119(e) and 37 CFR §§ 1.78(a)(2)(i) and 1.78(a)(5)(i) of the prior-filed application, unless previously submitted;

(2) the surcharge set forth in § 1.17(t); and

(3) a statement that the entire delay between the date the claim was due under 37 CFR §§ 1.78(a)(2)(ii) and 1.78(a)(5)(ii) and the date the claim was filed was unintentional. The Director may require additional where there is a question whether the delay was unintentional.

The petition does not comply with item (3). Petitioners are advised that 37 CFR §§ 1.78(a)(3) and 1.78(a)(6) require a statement that the entire delay between the date the claim was due under 37 CFR §§ 1.78(a)(2)(ii) and 1.78(a)(5)(ii) and the date the claim was filed was unintentional. The statement appearing in the petition varies from the required language in that the petition states: "[t]he unintentional omission of the statement requesting the benefit of 35 U.S.C. 119(e) was first noted as Counsel was conducting a customary checklist review of the file after receipt of the Notice of Allowance" and "[t]he entire delay in submitting the specification amendment was unintentional." Correction is required upon request for further consideration.

If petitioners wish to add the priority claim, a petition to withdraw from issue and a Request for Continued Examination should be filed prior to issuance of the patent. Absent such action, the patent will issue without the claim. Petitioners should note a Certificate of Correction cannot be employed to correct an applicant's mistake by adding or correcting a priority claim under 35 U.S.C. 119(e) for an application on or after November 29, 2000.

The Office of Patent Application Processing will be informed of the instant decision and will issue the application as a patent, without the priority claim contained in the amendment in due course, unless a petition to withdraw the application from issuance is timely filed and granted.

Further correspondence with respect to this matter should be addressed as follows:

By mail: Mail Stop PETITIONS
Commissioner for Patents
Post Office Box 1450
Alexandria, VA 22313-1450

By hand: Customer Service Window
Mail Stop Petitions
Randolph Building
401 Dulany Street
Alexandria, VA 22314

By fax: (571) 273-8300
ATTN: Office of Petitions

This application is being forwarded to the Office of Patent Publications.

Any questions concerning this decision on petition may be directed to Alesia M. Brown at (571) 272-3205.

Anthony Knight
Supervisor
Office of Petitions

UNITED STATES PATENT AND TRADEMARK OFFICE

COMMISSIONER FOR PATENTS
UNITED STATES PATENT AND TRADEMARK OFFICE
P.O. BOX 1450
ALEXANDRIA, VA 22313-1450
www.uspto.gov

MILLEN, WHITE, ZELANO & BRANIGAN, P.C.
2200 CLARENDON BLVD.
SUITE 1400
ARLINGTON, VA 22201

COPY MAILED

APR 0 4 2008

OFFICE OF PETITIONS

In re Application of	:	
Johannes Platzek, et al.	:	
Application No.: 10/857,877	:	ON PETITION
Filed: June 2, 2004	:	
Attorney Docket No.: SCH-1774-D01	:	

This is a decision on the petition, filed April 3, 2008, under 37 CFR 1.313(c)(2) to withdraw the above-identified application from issue after payment of the issue fee.

The petition is **GRANTED**.

The above-identified application is withdrawn from issue for consideration of a submission under 37 CFR 1.114 (request for continued examination). See 37 CFR 1.313(c)(2).

Petitioner is advised that the issue fee paid on August 2, 2007, cannot be refunded. If, however, this application is again allowed, petitioner may request that it be applied towards the issue fee required by the new Notice of Allowance.[1]

Telephone inquiries relating to this decision should be directed to the undersigned at (571) 272-3204.

The application is being referred to Technology Center AU 1618 for further processing of the request for continued examination under 37 CFR 1.114.

Sherry D. Brinkley
Petitions Examiner
Office of Petitions

[1] *The request to apply the issue fee to the new Notice may be satisfied by completing and returning the new Part B - Fee(s) Transmittal Form (along with any balance due at the time of submission). Petitioner is advised that the Issue Fee Transmittal Form must be completed and timely submitted to avoid abandonment of the application.*

UNITED STATES PATENT AND TRADEMARK OFFICE

UNITED STATES DEPARTMENT OF COMMERCE
United States Patent and Trademark Office
Address: COMMISSIONER FOR PATENTS
P.O. Box 1450
Alexandria, Virginia 22313-1450
www.uspto.gov

OLIFF & BERRIDGE, PLC
P.O. BOX 320850
ALEXANDRIA, VA 22320-4850

Mail Date: 04/20/2010

Applicant	: Kenji Nagase	: DECISION ON REQUEST FOR
Patent Number	: 7657370	: RECALCULATION of PATENT
Issue Date	: 02/02/2010	: TERM ADJUSTMENT IN VIEW
Appliction No	: 10/857,882	: OF WYETH AND NOTICE OF INTENT TO
Filed	: 06/02/2004	: ISSUE CERTIFICATE OF CORRECTION
		:

The Request for Recalculation is **GRANTED** to the extent indicated.

The patent term adjustment has been determined to be **1416** days. The USPTO will *sua sponte* issue a certificate of correction reflecting the amount of PTA days determined by the recalculation.

Prior to the issuance of the certificate of correction, the USPTO will afford patentee an opportunity to be heard and request reconsideration. Accordingly, patentee has **one month or thirty (30) days**, whichever is longer, to file a request for reconsideration of this patent term adjustment calculation. See 35 U.S.C. 154(b)(3)(B)(ii) and 37 CFR 1.322(a)(4). No extensions of time will be granted under 37 CFR 1.136.

Patentee should use document code PET.OP if electronically filing a request for reconsideration of this patent term adjustment calculation. The patentee must also include the information required by 37 CFR 1.705(b)(2) and the fee required by 37 CFR 1.18(e). If patentee does not file a timely request for reconsideration of this patent term adjustment calculation including the information required by 37 CFR 1.705(b)(2) and the fee required by 37 CFR 1.18(e), the USPTO will issue a certificate of correction reflecting the PTA determination noted above.

Patentee should be aware that in order to preserve the right to review in the United States District Court for the District of Columbia of the USPTO patent term adjustment determination, patentee must ensure that he or she also take the steps required under 35 U.S.C. 154(b)(4)(A) in a timely manner. Nothing in the request for recalculation should be construed as providing an alternative time frame for commencing a civil action under 35 U.S.C. 154(b)(4)(A).

Any questions concerning this decision should be directed to the Office of Patent Legal Administration at 571-272-7702.

UNITED STATES PATENT AND TRADEMARK OFFICE

COMMISSIONER FOR PATENTS
UNITED STATES PATENT AND TRADEMARK OFFICE
P.O. BOX 1450
ALEXANDRIA, VA 22313-1450
www.uspto.gov

JUL 28 2005

In re Application of Richard M. Fry Serial No. 10/857,897 Filed: June 2, 2004 For: FULL BLEED DVD CASE, CASE INSERT SHEET AND RELATED METHOD	:	DECISION ON PETITION TO MAKE SPECIAL

Applicant's petition, filed June 28, 2005, seeks to have this application made special pursuant to the Accelerated Examination Program. The petition is GRANTED.

The petition has been reviewed and is found to be in compliance with the requirements for special status as set forth in Section 708.02(VIII) of the Manual of Patent Examining Procedures (MPEP).

Applicant is advised that the examiner's search will be restricted to the subject matter encompassed by the claims. In the event that the application receives a first action rejection, applicant is encouraged to arrange for an interview with the examiner, and to provide the examiner with a working copy of any proposed amendment one working day prior to the interview. Any amendment filed in response to a first action rejection which would require broadening of the field of search will be treated as an improper response.

PETITION GRANTED.

Frederick R. Schmidt

Frederick R. Schmidt, Director
Technology Center 3700

Elaine P. Spector
Berenato, White & Stavish, LLC
6550 Rock Spring Drive, Suite 240
Bethesda, MD 20817

UNITED STATES PATENT AND TRADEMARK OFFICE

Commissioner for Patents
United States Patent and Trademark Office
P.O. Box 1450
Alexandria, VA 22313-1450
www.uspto.gov

Liniak, Berenato & White
6550 Rock Spring Drive
Suite 240
Bethesda, MD 20817

COPY MAILED

MAY 15 2006

OFFICE OF PETITIONS

In re Application of	:	
Richard M. Fry	:	
Application No. 10/857,897	:	DECISION ON PETITION
Filed: June 2, 2004	:	TO WITHDRAW
Attorney Docket No. 7575.100	:	FROM RECORD
	:	

This is a decision on the Request to Withdraw as attorney or agent of record under 37 C.F.R. § 1.36(b), filed January 5, 2006.

The request is **APPROVED**.

A grantable request to withdraw as attorney/agent of record must be signed by every attorney/agent seeking to withdraw or contain a clear indication that one attorney is signing on behalf of another/others. A request to withdraw will not be approved unless at least 30 (thirty) days would remain between the date of approval and the later of the expiration date of a time to file a response or the expiration date of the maximum time period which can be extended under 37 C.F.R. § 1.136(a).

Thomas P. Liniak has been withdrawn as attorney or agent; all other attorney remain of record.

Telephone inquiries concerning this decision should be directed to Cheryl Gibson-Baylor at (571)272-3213.

Cheryl Gibson-Baylor
Petitions Examiner
Office of Petitions

Conferee: Denise Pomier

UNITED STATES PATENT AND TRADEMARK OFFICE

Commissioner for Patents
United States Patent and Trademark Office
P.O. Box 1450
Alexandria, VA 22313-1450
www.uspto.gov

MAIL

JUL 2 0 2005

DIRECTOR OFFICE
TECHNOLOGY CENTER 2100

REED SMITH LLP
Suite 1400
3110 Fairview Park Drive
Falls Church VA 22042

In re Application of: KANAI et al.
Application No. 10/857,908
Filed: June 02, 2004
For: STORAGE CONTROL SYSTEM, CHANNEL CONTROL DEVICE FOR STORAGE CONTROL SYSTEM, AND DATA TRANSFER DEVICE

DECISION ON PETITION FOR ACCELERATED EXAMINATION UNDER M.P.E.P.§708.02(VIII)

This is a decision on the petition(s) filed April 21, 2005 under 37 C.F.R. 102(d) and M.P.E.P. § 708.02(VIII): Accelerated Examination, to make the above-identified application special.

The Petition is **GRANTED**.

M.P.E.P. § 708.02, Section VIII which sets out the prerequisites for a grantable petition for Accelerated Examination under 37 C.F.R. § 102(d) states in relevant part:

A new application (one which has not received any examination by the examiner) may be granted special status provided that applicant (and this term includes applicant's attorney or agent) complies with each of the following items:

(a) Submits a petition to make special accompanied by the fee set forth in 37 CFR 1.17(h);

(b) Presents all claims directed to a single invention, or if the Office determines that all the claims presented are not obviously directed to a single invention, will make an election without traverse as a prerequisite to the grant of special status;

(c) Submits a statement(s) that a pre-examination search was made, listing the field of search by class and subclass, publication, Chemical Abstracts, foreign patents, etc. The pre-examination search must be directed to the invention as claimed in the application for which special status is requested. A search made by a foreign patent office satisfies this requirement;

(d) Submits one copy each of the references deemed most closely related to the subject matter encompassed by the claims if said references are not already of record; and

(e) Submits a detailed discussion of the references, which discussion points out, with the particularity required by 37 CFR 1.111 (b) and (c), how the claimed subject matter is patentable over the references.

Petition to Make Special **GRANTED** since all of the requirements for special status under MPEP § 708.02(VIII) have been met.

The application file is being forwarded to the Examiner for accelerated examination in accordance with the procedures set forth in M.P.E.P. §708.02, Section VIII. If the application is subsequently allowed, it will be given priority for printing. See M.P.E.P. §1309.

Brian L. Johnson
Special Program Examiner 7/15/05
Technology Center 2100
Computer Architecture, Software and Information Security
571-272-3595

RP

UNITED STATES PATENT AND TRADEMARK OFFICE

UNITED STATES DEPARTMENT OF COMMERCE
United States Patent and Trademark Office
Address: COMMISSIONER FOR PATENTS
P.O. Box 1450
Alexandria, Virginia 22313-1450
www.uspto.gov

BACON & THOMAS, PLLC
625 SLATERS LANE
FOURTH FLOOR
ALEXANDRIA, VA 22314-1176

Mail Date: 04/21/2010

Applicant	: Jyh-Rong Sheu	: DECISION ON REQUEST FOR
Patent Number	: 7594841	: RECALCULATION of PATENT
Issue Date	: 09/29/2009	: TERM ADJUSTMENT IN VIEW
Appliction No	: 10/857,912	: OF WYETH AND NOTICE OF INTENT TO
Filed	: 06/02/2004	: ISSUE CERTIFICATE OF CORRECTION
		:

The Request for Recalculation is **GRANTED** to the extent indicated.

The patent term adjustment has been determined to be **0** days. The USPTO will *sua sponte* issue a certificate of correction reflecting the amount of PTA days determined by the recalculation.

Prior to the issuance of the certificate of correction, the USPTO will afford patentee an opportunity to be heard and request reconsideration. Accordingly, patentee has **one month or thirty (30) days**, whichever is longer, to file a request for reconsideration of this patent term adjustment calculation. See 35 U.S.C. 154(b)(3)(B)(ii) and 37 CFR 1.322(a)(4). No extensions of time will be granted under 37 CFR 1.136.

Patentee should use document code PET.OP if electronically filing a request for reconsideration of this patent term adjustment calculation. The patentee must also include the information required by 37 CFR 1.705(b)(2) and the fee required by 37 CFR 1.18(e). If patentee does not file a timely request for reconsideration of this patent term adjustment calculation including the information required by 37 CFR 1.705(b)(2) and the fee required by 37 CFR 1.18(e), the USPTO will issue a certificate of correction reflecting the PTA determination noted above.

Patentee should be aware that in order to preserve the right to review in the United States District Court for the District of Columbia of the USPTO patent term adjustment determination, patentee must ensure that he or she also take the steps required under 35 U.S.C. 154(b)(4)(A) in a timely manner. Nothing in the request for recalculation should be construed as providing an alternative time frame for commencing a civil action under 35 U.S.C. 154(b)(4)(A).

Any questions concerning this decision should be directed to the Office of Patent Legal Administration at 571-272-7702.

UNITED STATES PATENT AND TRADEMARK OFFICE

UNITED STATES DEPARTMENT OF COMMERCE
United States Patent and Trademark Office
Address: COMMISSIONER FOR PATENTS
P.O. Box 1450
Alexandria, Virginia 22313-1450
www.uspto.gov

KRATZ, QUINTOS & HANSON, LLP
1420 K Street, N.W.
4th Floor
WASHINGTON, DC 20005

Mail Date: 04/21/2010

Applicant	: Koji Otsubo	: DECISION ON REQUEST FOR
Patent Number	: 7595508	: RECALCULATION of PATENT
Issue Date	: 09/29/2009	: TERM ADJUSTMENT IN VIEW
Appliction No	: 10/857,920	: OF WYETH AND NOTICE OF INTENT TO
Filed	: 06/02/2004	: ISSUE CERTIFICATE OF CORRECTION
		:

The Request for Recalculation is **GRANTED** to the extent indicated.

The patent term adjustment has been determined to be **0** days. The USPTO will *sua sponte* issue a certificate of correction reflecting the amount of PTA days determined by the recalculation.

Prior to the issuance of the certificate of correction, the USPTO will afford patentee an opportunity to be heard and request reconsideration. Accordingly, patentee has **one month or thirty (30) days**, whichever is longer, to file a request for reconsideration of this patent term adjustment calculation. See 35 U.S.C. 154(b)(3)(B)(ii) and 37 CFR 1.322(a)(4). No extensions of time will be granted under 37 CFR 1.136.

Patentee should use document code PET.OP if electronically filing a request for reconsideration of this patent term adjustment calculation. The patentee must also include the information required by 37 CFR 1.705(b)(2) and the fee required by 37 CFR 1.18(e). If patentee does not file a timely request for reconsideration of this patent term adjustment calculation including the information required by 37 CFR 1.705(b)(2) and the fee required by 37 CFR 1.18(e), the USPTO will issue a certificate of correction reflecting the PTA determination noted above.

Patentee should be aware that in order to preserve the right to review in the United States District Court for the District of Columbia of the USPTO patent term adjustment determination, patentee must ensure that he or she also take the steps required under 35 U.S.C. 154(b)(4)(A) in a timely manner. Nothing in the request for recalculation should be construed as providing an alternative time frame for commencing a civil action under 35 U.S.C. 154(b)(4)(A).

Any questions concerning this decision should be directed to the Office of Patent Legal Administration at 571-272-7702.

UNITED STATES PATENT AND TRADEMARK OFFICE

COMMISSIONER FOR PATENTS
UNITED STATES PATENT AND TRADEMARK OFFICE
P.O. BOX 1450
ALEXANDRIA, VA 22313-1450
WWW.USPTO.GOV

Paper No. None

OLIFF & BERRIDGE, PLC
P.O. BOX 19928
ALEXANDRIA VA 22320

COPY MAILED
AUG 2 3 2004
OFFICE OF PETITIONS

In re Application of
Satoshi Shigezaki, Hiroe Okuyama, Takahiro Suzuki, Katsumi Nukada, and Eiji Funabashi
Application No. 10/857,960
Filed: June 2, 2004
Attorney Docket No. 115035.01
Title: ELECTROPHOTOGRAPHIC PHOTORECEPTOR, ELECTROPHOTOGRAPHIC MEMBER, PROCESS CARTRIDGE AND IMAGE FORMING APPARATUS

DECISION ON PETITION UNDER 37 C.F.R. §1.47(A)

This is in response to the petition under 37 C.F.R. §1.47(a)[1], filed June 2, 2004.

On June 2, 2004, the application was deposited, identifying Satoshi Shigezaki, Hiroe Okuyama, Takahiro Suzuki, Katsumi Nukada, and Eiji Funabashi as joint inventors. The application was deposited with the instant petition, along with a declaration which was executed by each of the inventors save Mr. Funabashi.

With the instant petition, Petitioner has also submitted the associated fee, a statement of facts, and copy of a letter which was sent to the non-signing inventor. The surcharge is not required.

1A grantable petition under 37 C.F.R. §1.47(a) requires:

(1) the petition fee of $130;
(2) a surcharge of either $65 or $130 if the petition is not filed at the time of filing the application, as set forth in 37 CFR § 1.16(e);
(3) a statement of the last known address of the non-signing inventors;
(4) either
  a) proof that a copy of the entire application (specification, claims, drawings, and the oath or declaration) was sent or given to the non-signing inventor for review and proof that the non-signing inventor refuses to join in the application or
  b) proof that the non-signing inventor cannot be found or reached after diligent effort;
(5) a declaration which complies with 37 CFR §1.63.

The above-identified application and papers have been reviewed and found in compliance with 37 CFR §1.47(a).

The petition is **GRANTED** and this application is hereby accorded Rule §1.47(a) status.

As provided in Rule 1.47(a), this Office will forward notice of this application's filing to the non-signing inventor at the addresses given in the petition. Notice of the filing of this application will also be published in the Official Gazette.

After this decision is mailed, the application will be forwarded to Technology Center 1700 for further processing.

Telephone inquiries regarding this decision should be directed to the undersigned at (703) 305-0011. Please note that on approximately September 28, 2004, the Office of Petitions will relocate to the new PTO location in Alexandria. Although the mailing address will remain the same, the general phone number for the Office of Petitions which should be used for status requests will change to 571-272-3282, and the telephone number for the undersigned will change to 571-272-3225.

Paul Shanoski
Senior Attorney
Office of Petitions
United States Patent and Trademark Office

UNITED STATES PATENT AND TRADEMARK OFFICE

COMMISSIONER FOR PATENTS
UNITED STATES PATENT AND TRADEMARK OFFICE
P.O. BOX 1450
ALEXANDRIA, VA 22313-1450
WWW.USPTO.GOV

Eiji Funabashi
11-14, Futaba 1-chome
Sagamihara-shi, Kanagawa 228-0816
JAPAN

COPY MAILED
AUG 2 3 2004
OFFICE OF PETITIONS

In re Application of
Satoshi Shigezaki, Hiroe Okuyama, Takahiro Suzuki, Katsumi Nukada, and Eiji Funabashi
Application No. 10/857,960
Filed: June 2, 2004
Attorney Docket No. 115035.01
Title: ELECTROPHOTOGRAPHIC PHOTORECEPTOR, ELECTROPHOTOGRAPHIC MEMBER, PROCESS CARTRIDGE AND IMAGE FORMING APPARATUS

LETTER

Dear Mr. Fuanbashi:

You are named as a joint inventor in the above-identified United States patent application filed under the provisions of 35 U.S.C. 116 (United States Code) and 37 CFR 1.47(a), Rules of Practice in Patent Cases. Should a patent be granted on the application you will be designated therein as a joint inventor.

As a named inventor you are entitled to inspect any paper in the file wrapper of the application, order copies of all or any part thereof (at a prepaid cost per 37 CFR 1.19) or make your position of record in the application. Alternatively, you may arrange to do any of the preceding through a registered patent attorney or agent presenting written authorization from you. If you care to join the application, the attorney of record below would presumably assist you. Joining in the application would entail the filing of an appropriate oath or declaration by you pursuant to 37 CFR 1.63.

Telephone inquiries regarding this communication should be directed to the undersigned at (703) 305-0011. Requests for information regarding your application should be directed to the File Information Unit at (703) 308-2733. Information regarding how to pay for and order a copy of the application, or a specific paper in the application, should be directed to the Certification Division at (703) 308-9726 or 1-800-972-6382 (outside the Washington D.C. area).

Paul Shanoski
Senior Attorney
Office of Petitions
United States Patent and Trademark Office

cc: OLIFF & BERRIDGE, PLC
P.O. BOX 19928
ALEXANDRIA VA 22320

UNITED STATES PATENT AND TRADEMARK OFFICE

Commissioner for Patents
United States Patent and Trademark Office
P.O. Box 1450
Alexandria, VA 22313-1450
www.uspto.gov

HUNTON & WILLIAMS
INTELLECTUAL PROPERTY DEPARTMENT
1900 K STREET, N.W., SUITE 1200
WASHINGTON, DC 20006-1109

COPY MAILED
JUN 0 5 2006
OFFICE OF PETITIONS

In re Application of Badisse David Mehmet Application No. 10/857,981 Filed: June 2, 2004 Attorney Docket No. 65438.000004	: : : : : :	DECISION ON PETITION TO WITHDRAW FROM RECORD

This is a decision on the Request to Withdraw as attorney or agent of record under 37 C.F.R. § 1.36(b), filed March 22, 2006.

The request is **APPROVED**.

A grantable request to withdraw as attorney/agent of record must be signed by every attorney/agent seeking to withdraw or contain a clear indication that one attorney is signing on behalf of another/others. A request to withdraw will not be approved unless at least 30 (thirty) days would remain between the date of approval and the later of the expiration date of a time to file a response or the expiration date of the maximum time period which can be extended under 37 C.F.R. § 1.136(a).

The request was signed by Stephen T. Schreiner on behalf of all attorneys of record who are associated with customer No. 21967.

All attorneys associated with customer No. 21967 have been withdrawn.

Applicant is reminded that there is no attorney of record at this time.

The correspondence address of record has been changed and the new correspondence address is the address indicated below.

Telephone inquires concerning this decision should be directed to Wan Laymon at 571-272-3220.

This application became abandoned for failure to timely file a reply to the non-final Office action mailed October 18, 2005.

Dwin Potts for
Amelia Au
Petitions Examiner
Office of Petitions

cc: BADISSE DAVID MEHMET
424 PARK AVENUE SOUTH
NEW YORK, NY 10016

UNITED STATES PATENT AND TRADEMARK OFFICE

Commissioner for Patents
United States Patent and Trademark Office
P.O. Box 1450
Alexandria, VA 22313-1450
www.uspto.gov

David Aker
23 Southern Road
Hartsdale NY 10530

COPY MAILED

AUG 06 2008

In re Application of	:	
Belanger et al.	:	
Application No. 10/857,988	:	ON PETITION
Filed: May 30, 2004	:	
Attorney Docket No.	:	
YOR920040055US1		

This is a decision on the petition under the unintentional provisions of 37 CFR 1.137(b), filed July 7, 2008, to revive the above-identified application.

The petition is **GRANTED**.

The application became abandoned for failure to timely file a reply within the meaning of 37 CFR 1.113 to the final Office action of July 25, 2007. The proposed reply required for consideration of a petition to revive must be a Notice of Appeal (and appeal fee required by 37 CFR 41.20(b)(2), an amendment that *prima facie* places the application in condition for allowance, a Request for Continued Examination and submission (37 CFR 1.114), or the filing of a continuing application under 37 CFR 1.53(b). See MPEP 711.03(c)(III)(A)(2). No extensions of time pursuant to the provisions of 37 CFR 1.136(a) were obtained. Accordingly, the date of abandonment of this application is October 26, 2007.

The petition satisfies the requirements of 37 CFR 1.137(b) in that petitioner has supplied (1) the reply in the form of a Request for Continued Examination (RCE) and fee of $ 810, and the submission required by 37 CFR 1.114; (2) the petition fee of $ 1540; and (3) a proper statement of unintentional delay.

There is no indication that the person signing the petition was ever given a power of attorney or authorization of agent to prosecute the above-identified patent. However, in accordance with 37CFR 1.34(a), the signature of David Aker appearing on the application shall constitute a representation to the United States Patent and Trademark Office that she is authorized to represent the particular party in whose behalf she acts. If petitioner desires to receive future correspondence regarding this application, the appropriate power of attorney or authorization of agent must be submitted.

Telephone inquiries concerning this decision should be directed to Denise Williams at (571) 272-8930.

This application is being referred to Technology Center AU 1793 for processing of the RCE and for appropriate action by the Examiner in the normal course of business on the amendment submitted in accordance with 37 CFR 1.114.

Andrea Smith
Petitions Examiner
Office of Petitions

UNITED STATES PATENT AND TRADEMARK OFFICE

Commissioner for Patents
United States Patent and Trademark Office
P.O. Box 1450
Alexandria, VA 22313-1450
www.uspto.gov

MEDLEN & CARROLL, LLP
Suite 350
101 Howard Street
San Francisco CA 94105

COPY MAILED
MAR 2 9 2005
OFFICE OF PETITIONS

In re Application of	:
Sheikhnejad, et al.	: DECISION REFUSING
Application No. 10/858,013	: STATUS UNDER
Filed: June 1, 2004	: 37 CFR 1.47(a)
Attorney Docket No. PRONAI-09056	:
For: METHODS AND COMPOSITION FOR THE INHIBITION OF GENE EXPRESSION	:

This decision is in response to the petition under 37 CFR 1.47(a), filed February 9, 2005 (certificate of mailing date February 7, 2005).

The petition is dismissed.

Any request for reconsideration of this decision must be submitted within TWO (2) MONTHS from the mail date of this decision. Extensions of time under 37 CFR 1.136(a) are permitted. Any response should be entitled "Request for Reconsideration of Petition Under 37 CFR 1.47(a)" and may include an oath or declaration executed by the inventor. **Failure to respond will result in abandonment of the application.**

The above-identified application was filed on June 1, 2004 without an executed oath or declaration. Accordingly, on August 9, 2004, a "Notice to File Missing Parts of Nonprovisional Application" was mailed, requiring, *inter alia*, an executed oath or declaration and a surcharge for its late filing.

In response, petitioners filed request for a 4 month extension of time and required fee, a declaration executed by two of three joint inventors, the surcharge, the petition fee, and the instant petition, *inter alia*, on February 9, 2005 (certificate of mailing date February 7, 2005). Attorney Tanya A. Arenson signed the petition. Attorney Arenson sets forth the last known address of non-signing inventor Reza Sheikhnejad and states that Mr. Sheikhnejad refused to execute a declaration for this patent application. The exhibits to the petition include e-mails and letters authored by Mr. Sheikhnejad that clearly establish that he will not join in the filing of the

application.

A grantable petition under 37 CFR 1.47(a) requires:

(1) proof that the non-signing inventor cannot be reached or refuses to sign the oath or declaration;
(2) an acceptable oath or declaration;
(3) the petition fee of $200;
(4) a statement of the last known address of the non-signing inventor;

Applicants lack item (2) set forth above. An oath or declaration for the patent application in compliance with 37 CFR 1.63 and 1.64 still has not been presented. See MPEP 409.03(a). The declaration does not contain all required information for Mr. Sheikhnejad.

As listing the citizenship for each inventor is a statutory requirement under 35 U.S.C. 115, it cannot be waived. An oath or declaration in compliance with 37 CFR 1.63 and1.64 signed by the Rule 1.47 applicants on behalf of the non-signing inventor is REQUIRED. See MPEP 409.03(a).

The signing inventors must execute a new declaration that lists complete identifying information for all inventors, including Mr. Sheikhnejad.

Regarding finances, the current fee for filing a petition under 37 CFR 1.47(a) is $200.00. Petitioners submitted only $130.00. Accordingly, on February 10, 2005, petitioners' deposit account was charged the balance due, or $70.00.

Further correspondence with respect to this matter should be addressed as follows:

By mail: Mail Stop PETITION
Commissioner for Patents
Post Office Box 1450
Alexandria, VA 22313-1450

By hand: U.S. Patent and Trademark Office
Customer Service Window, Mail Stop Petition
Randolph Building
401 Dulany Street
Alexandria, VA 22314

By FAX: (703) 872-9306 – ATTN: Office of Petitions

Telephone inquiries should be directed to the undersigned at (571) 272-3230.

E. Shirene Willis

E. Shirene Willis
Senior Petitions Attorney
Office of Petitions

UNITED STATES PATENT AND TRADEMARK OFFICE

Commissioner for Patents
United States Patent and Trademark Office
P.O. Box 1450
Alexandria, VA 22313-1450
www.uspto.gov

MEDLEN & CARROLL, LLP
Suite 350
101 Howard Street
San Francisco CA 94105

COPY MAILED
JUN 3 0 2005
OFFICE OF PETITIONS

In re Application of	:
Sheikhnejad, et al.	: DECISION ACCORDING
Application No. 10/858,013	: STATUS UNDER
Filed: June 1, 2004	: 37 CFR 1.47(a)
Attorney Docket No. PRONAI-09056	:
For: METHODS AND COMPOSITION FOR THE INHIBITION OF GENE EXPRESSION	:

This decision is in response to the reconsideration petition under 37 CFR 1.47(a), filed June 3, 2005 (certificate of mailing date May 27, 2005).

Petitioners have shown that the non-signing inventor, Gholamreza Sheikhnehjad, has refused to join in the filing of the above-identified application after having been presented with the application papers. Specifically, Attorney Arenson sets forth the last known address of non-signing inventor Gholamreza Sheikhnejad and states that Mr. Sheikhnejad refused to execute a declaration for this patent application. In his declaration, Thomas A. Collet, Ph.D., CEO of ProNAi Therapeutics, Inc., states that he personally handed a copy of the application to Mr. Sheikhnejad. The exhibits to the petition include e-mails and letters authored by Mr. Sheikhnejad that clearly establish that he will not join in the filing of the application. Petitioners have submitted a declaration in compliance with 37 CFR 1.63 and 1.64.

Regarding fees, President Bush signed the Consolidated Appropriations Act on December 8, 2004. This Act changed many patent fees. The 37 CFR 1.47 petition fee became $200.00. Petitioners have been charged two $200.00 petition fees. Only one is required. Pursuant to petitioners' authorization, deposit account no. 08-1290 will be credited $200.00.

This application and papers have been reviewed and found in compliance with 37 CFR 1.47(a). This application is hereby accorded Rule 1.47(a) status.

As provided in Rule 1.47(c), this Office will forward notice of this application's filing to the non-signing inventor at the address given in the petition. Notice of the filing of this application will

also be published in the Official Gazette.

After this decision is mailed, the above-identified application will be returned to the Office of Initial Patent Examination for further processing.

Telephone inquiries should be directed to the undersigned at (571) 272-3230.

E. Shirene Willis

E. Shirene Willis
Senior Petitions Attorney
Office of Petitions

UNITED STATES PATENT AND TRADEMARK OFFICE

Commissioner for Patents
United States Patent and Trademark Office
P.O. Box 1450
Alexandria, VA 22313-1450
www.uspto.gov

GHOLAMREZA SHEIKHNEHJAD
6394 BEDVIEW DRIVE
SALINE, MI 48176

COPY MAILED

JUN 3 0 2005

OFFICE OF PETITIONS

LETTER

In re Application of :
Sheikhnejad, et al. :
Application No. 10/858,013 :
Filed: June 1, 2004 :
Attorney Docket No. PRONAI-09056 :
For: METHODS AND COMPOSITION FOR THE INHIBITION OF GENE EXPRESSION :

Dear Mr. Sheikhnehjad:

You are named as a joint inventor in the above identified United States patent application, filed under the provisions of 35 U.S.C. 116 (United States Code), and 37 CFR 1.47(a), Rules of Practice in Patent Cases. Should a patent be granted on the application you will be designated therein as a joint inventor.

As a named inventor you are entitled to inspect any paper in the file wrapper of the application, order copies of all or any part thereof (at a prepaid cost per 37 CFR 1.19) or make your position of record in the application. Alternatively, you may arrange to do any of the preceding through a registered patent attorney or agent presenting written authorization from you. If you care to join the application, counsel of record (see below) would presumably assist you. Joining in the application would entail the filing of an appropriate oath or declaration by you pursuant to 37 CFR 1.63.

Requests for information regarding your application should be directed to the File Information Unit at (703)308-2733. Information regarding how to pay for and order a copy of the application, or a specific paper in the application, should be directed to Certification Division at (703)308-9726 or 1(800)972-6382 (outside the Washington D.C. area).

Telephone inquiries regarding this communication should be directed to the undersigned at (571) 272-3230.

E. Shirene Willis

E. Shirene Willis
Senior Petitions Attorney
Office of Petitions

ATTORNEY OF RECORD: MEDLEN & CARROLL, LLP
Suite 350
101 Howard Street
San Francisco CA 94105

UNITED STATES PATENT AND TRADEMARK OFFICE

COMMISSIONER FOR PATENTS
UNITED STATES PATENT AND TRADEMARK OFFICE
P.O. BOX 1450
ALEXANDRIA, VA 22313-1450
www.uspto.gov

TANYA A. ARENSON
MEDLEN & CARROLL
101 HOWARD STREET, SUITE 350
SAN FRANCISCO, CA 94105

COPY MAILED

JUN 03 2005

OFFICE OF PETITIONS

In re Application of	:
Reza Sheikhnejad et al.	: DECISION DISMISSING
Application No. 10/858,094	: PETITION UNDER
Filed: June 1,.2004	: 37 CFR 1.47(a)
Attorney Docket No. PRONAI-09055	:

This is in response to the petition under 37CFR 1.47(a), filed February 11, 2005.

The petition is dismissed.

Rule 47 applicant is given TWO MONTHS from the mailing date of this decision to reply, correcting the below-noted deficiencies. Any reply should be entitled "Request for Reconsideration of Petition Under 37 CFR 1.47(a)," and should only address the deficiencies noted below, except that the reply may include an oath or declaration executed by the non-signing inventor. **FAILURE TO RESPOND WILL RESULT IN ABANDONMENT OF THE APPLICATION**. Any extensions of time will be governed by 37 CFR 1.136(a).

A grantable petition under 37 CFR 1.47(a) requires: (1) proof that the non-signing inventor cannot be reached or refuses to sign the oath or declaration after having been presented with the application papers (specification, claims and drawings); (2) an acceptable oath or declaration in compliance with 35 U.S.C. §§ 115 and 116; (3) the petition fee; and (4) a statement of the last known address of the non-signing inventor. Applicant lacks items (2) set forth above.

As to item (2) the declaration submitted with the petition is not in compliance with 37 CFR 1.63 and 1.64. The declaration fails to set forth the citizenship of joint inventor Reza Sheikhnejad. Accordingly, a declaration in compliance with 37 CFR 1.63 and 1.64 signed by the signing inventor on behalf of himself and the non-signing inventor is required. Note MPEP 409.03(a); MPEP 602, and MPEP 605.01.

Further correspondence with respect to this matter should be addressed as follows:

By mail: Mail Stop PETITION
Commissioner for Patents
Post Office Box 1450
Alexandria, VA 22313-1450

By hand: Customer Service Window
Randolph Building
401 Dulany Street
Alexandria, VA 22314

By facsimile: (703) 872-9306
ATTN: Office of Petitions

Telephone inquiries related to this decision should be directed to Irvin Dingle at (571) 272-3210.

Frances Hicks

Frances Hicks
Lead Petitions Examiner
Office of Petitions
Office of the Deputy Commissioner
for Patent Examination Policy

UNITED STATES PATENT AND TRADEMARK OFFICE

Commissioner for Patents
United States Patent and Trademark Office
P.O. Box 1450
Alexandria, VA 22313-1450
www.uspto.gov

COPY MAILED
OCT 1 2 2006
OFFICE OF PETITIONS

JONATHAN P. O'BRIEN, PH.D.
MILLER CANFIELD, PADDOCK AND STONE
444 WEST MICHIGAN AVENUE
KALAMAZOO, MI 49007

In re Application of	:
Reza Sheikhnejad et al	: DECISION DISMISSING PETITION
Application No. 10/858,094	: FOR RECONSIDERATION
Filed: June 1, 2004	: UNDER 37 CFR 1.47(a)
Attorney Docket No. 125829/00023	:

This is in response to the petition filed August 5, 2005, requesting reconsideration of a decision mailed June 3, 2005, which refused to accord 37 CFR 1.47(a) status to the above-identified application.

The petition is dismissed.

Rule 47 applicant is given TWO MONTHS from the mailing date of this decision to reply, correcting the below-noted deficiencies. Any reply should be entitled "Request for Reconsideration of Petition Under 37 CFR 1.47(a)," and should only address the deficiencies noted below, except that the reply may include an oath or declaration executed by the non-signing inventor. **FAILURE TO RESPOND WILL RESULT IN ABANDONMENT OF THE APPLICATION**. Any extensions of time will be governed by 37 CFR 1.136(a).

A grantable petition under 37 CFR 1.47(a) requires: (1) proof that the non-signing inventor cannot be reached or refuses to sign the oath or declaration after having been presented with the application papers (specification, claims and drawings); (2) an acceptable oath or declaration in compliance with 35 U.S.C. §§ 115 and 116; (3) the petition fee; and (4) a statement of the last known address of the non-signing inventor. Applicant lacks items (2) set forth above.

The declaration submitted on August 5, 2005 lacks compliance with 37 CFR 1.63. In this regard, the first named inventor (Reza Sheikhnehjad) previously filed on the February 11, 2005 declaration differs from the first named inventor filed on the August 5, 2005 declaration (Gholamreza Sheikhnehjad). See MPEP 605; MPEP 605.04(a) and MPEP 605.04(b).

Further correspondence with respect to this matter should be addressed as follows:

By mail: Mail Stop PETITIONS
Commissioner for Patents
Post Office Box 1450
Alexandria, VA 22313-1450

By hand: Customer Service Window
Mail Stop Petitions
Randolph Building
401 Dulany Street
Alexandria, VA 22314

By fax: (571) 273-8300
ATTN: Office of Petitions

Telephone inquiries related to this decision should be directed to Irvin Dingle at (571) 272-3210.

Frances Hicks

Frances Hicks
Lead Petitions Examiner
Office of Petitions

UNITED STATES PATENT AND TRADEMARK OFFICE

Commissioner for Patents
United States Patent and Trademark Office
P.O. Box 1450
Alexandria, VA 22313-1450
www.uspto.gov

JONATHAN P. O'BRIEN, PH.D.
MILLER CANFIELD PADDOCK AND STONE
444 WEST MICHIGAN AVENUE
KALAMAZOO, MI 49007

COPY MAILED

NOV 06 2007

OFFICE OF PETITIONS

In re Application of	:	
Reza Sheikhnehjad et al.	:	
Application No. 10/858,094	:	DECISION NOTING JOINDER
Filed: June 1, 2004	:	OF INVENTORS AND PETITION
Attorney Docket No. 125829/00023	:	UNDER 37 CFR 1.47 (a) MOOT

Papers filed on March 12, 2007 in response to a "Decision Refusing Status Under 37 CFR 1.47 (a)," mailed October 12, 2006, included a Declaration signed by previously nonsigning inventor Reza Sheikhnehjad in compliance with 37 CFR 1.63.

In view of the joinder of the inventor, further consideration under 37 CFR 1.47 (a) is moot; this application does not have any rule 1.47 (a) status and no such status should appear on the file wrapper. This application need not be returned to this office for any further consideration under 37 CFR 1.47 (a).

This application is being forwarded to Technology Center AU 1653 for examination in due course.

Telephone inquiries related to this decision should be directed to Irvin Dingle at (571) 272-3210.

Frances Hicks
Lead Petitions Examiner
Office of Petitions

UNITED STATES PATENT AND TRADEMARK OFFICE

Commissioner for Patents
United States Patent and Trademark Office
P.O. Box 1450
Alexandria, VA 22313-1450
www.uspto.gov

YOKOI & CO. U.S.A., INC.
13700 MARINA POINTE DRIVE #723
MARINA DEL RAY, CA 90292

COPY MAILED

MAR 0 7 2006

OFFICE OF PETITIONS

In re Application of Itou :
Application No. 10/858,101 : Decision on Petition
Filing Date: June 1, 2004 :
Attorney Docket No. P04-1004 :

This is a decision on the petition under 37 CFR 1.137(b), filed May 16, 2005, to revive the above-identified application.

The petition is **granted**.

The above-identified application became abandoned for failure to submit the issue fee and publication fee in a timely manner in reply to the Notice of Allowance mailed January 4, 2005, which set a statutory period for reply of three (3) months. Accordingly, the above-identified application became abandoned on April 5, 2005.

The instant petition requests revival of the application.

Petitioner has met the requirements to revive the above-identified application pursuant to 37 CFR 1.137(b). Therefore, the petition is granted and the application is revived.

The Office of Publications will be informed of the instant decision so that the application may be issued as a patent.

Telephone inquiries regarding this communication should be directed to Petitions Attorney Steven Brantley at (571) 272-3203.

Charles Steven Brantley
Senior Petitions Attorney
Office of Petitions

UNITED STATES PATENT AND TRADEMARK OFFICE

COMMISSIONER FOR PATENTS
UNITED STATES PATENT AND TRADEMARK OFFICE
P.O. BOX 1450
ALEXANDRIA, VA 22313-1450
www.uspto.gov

COPY MAILED
OCT 17 2006
OFFICE OF PETITIONS

Kenneth A. Roddy
Suite 100
2916 West T.C. Jester Boulevard
Houston, TX 77018

In re Application of :
Wybro, et. al : DECISION ON PETITION
Application No. 10/858,120 :
Filed: June 1, 2004 :
For: CENTRAL PONTOON :
SEMISUBMERSIBLE FLOATING PLATFORM

This is a decision on the petition under 37 C.F.R. § 1.137(b), filed August 8, 2006.

The petition is hereby **GRANTED**.

This application became abandoned February 23, 2006 for failure to timely submit a proper reply to the Notice of Allowance (Notice) mailed November 22, 2005. Notice of Abandonment was mailed May 5, 2006.

A grantable petition pursuant to 37 C.F.R. § 1.137(b) must be accompanied by: (1) the required reply to the outstanding Office action or notice, unless previously filed; (2) the petition fee as set forth in 37 C.F.R. § 1.17(m); (3) a statement that the entire delay in filing the required reply from the due date for the reply until the filing of a grantable petition pursuant to 37 C.F.R. § 1.137(b) was unintentional; and (4)any terminal disclaimer (and fee set forth in 37 C.F.R. § 1.20(d)) required pursuant to 37 C.F.R. § 1.137(c).

The instant petition has been reviewed and found in compliance with the provisions of 37 C.F.R. § 1.137(b). Accordingly, the failure to timely submit a proper reply to the Notice is accepted as having been unintentionally delayed.

This application will be forwarded to the Office of Patent Publication for further processing.

Telephone inquiries concerning this matter may be directed to the undersigned at (571) 272-3205.

Alesia M. Brown
Petitions Attorney
Office of Petitions

UNITED STATES PATENT AND TRADEMARK OFFICE

Commissioner for Patents
United States Patent and Trademark Office
P.O. Box 1450
Alexandria, VA 22313-1450
www.uspto.gov

June 21, 2005

William B. Patterson
MOSER, PATTERSON & SHERIDAN, LLP
3040 Post Oak Blvd.
Suite 1500
Houston, TX 77056

Patent No.: **6865486 B2**
Inventor(s): **Steven M. Tobias, et al.**
Issued: March 8, 2005
Title: **METHOD OF USING UNDERBALANCED WELL DATA FOR SEISMIC ATTRIBUTE ANALYSIS**

Re: Request for Certificate of Correction

Consideration has been given your request for the issuance of a certificate of correction for the above-identified patent under the provisions of Rule(s) 1.322 and/or 1.323.

Assignees' names and addresses (assignment data) printed in a patent, are based *solely* on information supplied in the appropriate space for identifying the assignment data, i.e., item 3 of the Issue Fee Transmittal Form PTOL-85B. Granting of a request under 37 CFR 3.81(b) is required to correct applicant's error providing ***incorrect or erroneous*** assignment data, *before* issuance of a Certificate of Correction, under 37 CFR 1.323 *(see Manual of Patent Examining Procedures (M.P.E.P) Chp.1400, sect. 1481).* This procedure is required *at any time after the issue fee is paid*, including after issuance of the patent.

In view of the foregoing, your request, in this mater, is hereby denied.

A request to correct the Assignee under 37 CFR 3.81(b) should include:

A. **the processing fee set forth in 37 CFR 1.117(h) (currently $130);**
B. a statement that the failure to include the correct assignee name on the PTOL-85B was inadvertent; and
C. a copy of the Notice of Recordation of Assignment Document, reflecting the reel and frame number where the assignment(s) is recorded and/or reflecting proof of *the date* the assignment was submitted for recordation.

In the Request, Applicant(s) may request that the file be forwarded to Certificates of Correction Branch, for issuance of a Certificate of Correction, if the Request is granted.

Any request under 37 CFR 3.81(b) should be directed to the following address or facsimile number:

By mail:	Mail Stop PETITIONS Commissioner for Patents Post Office Box 1450 Alexandria, VA 22313-1450
By hand:	Customer Service Window Mail Stop Petitions Randolph Building 401 Dulany Street Alexandria, VA 22314
By fax:	(703) 872-9306 ATTN: Office of Petitions

If a fee (currently $100) was previously submitted for consideration of a Request for Certificate of Correction, under CFR 1.323, to correct assignment data, no additional fee is required.

Virginia Tolbert
For Cecelia Newman
Decisions & Certificates
of Correction Branch
(703) **308-9390 ext 113** or (703) 308-8309

vt

UNITED STATES PATENT AND TRADEMARK OFFICE

Commissioner for Patents
United States Patent and Trademark Office
P.O. Box 1450
Alexandria, VA 22313-1450
www.uspto.gov

Thomas D. Helmholdt
YOUNG & BASILE, P.C.
Suite 624
3001 W. Big Beaver Rd.
Troy MI 48084

COPY MAILED

MAY 1 3 2005

OFFICE OF PETITIONS

In re Application of	:	
Oldford et al.	:	DECISION ON PETITION
Application No. 10/858,133	:	
Filed: June 1, 2004	:	
Attorney Docket No. PTC-256-D	:	

This is a decision on the petition filed January 27, 2005, which is being treated as a petition under 37 CFR 1.182.

Applicant asserts that the USPTO incorrectly entered the domestic priority data for the above-identified application. Specifically, applicant states that the Office indicated that the above-identified application is a divisional application of application No. 10/402,901, filed March 28, 2003. Applicant requests that the Office correct the domestic priority data to indicate that the above-identified application is a divisional application of application No. 10/402,901, filed March 23, 2003, rather than March 28, 2003, as evidenced by paragraph 0001 of the specification.

A review of the Office records indicates that applicant filed application No. 10/402,901 on March 28, 2003, by Express Mail Service. Additionally, a review of the transmittal letter submitted in application No. 10/402,901 contains the signature of Thomas D. Helmholdt dated March 28, 2003, three days after the filing date applicant is now requesting for application No. 10/402,901.

Accordingly, applicant has not provided sufficient evidence that the USPTO incorrectly entered the domestic priority data for application No. 10/858,133. The petition is **dismissed**.

If applicant wishes to dispute the filing date of March 28, 2003, accorded in application No. 10/402,901, applicant must file a petition to correct the filing date with the requisite petition fee in application No. 10/402,901, not in application No. 10/858,133.

The required petition fee of $400.00 will be charged to Deposit Account No. 25-0015, as authorized by applicant.

Any request for reconsideration must be filed with TWO (2) MONTHS of the date of this decision. No extensions are permissible. See 37 CFR 1.181(f).

Any inquiries related to this decision should be directed to the undersigned at (571) 272-3211.

Christina Tartera Donnell

Christina Tartera Donnell
Senior Petitions Attorney
Office of Petitions

UNITED STATES PATENT AND TRADEMARK OFFICE

UNITED STATES DEPARTMENT OF COMMERCE
United States Patent and Trademark Office
Address: COMMISSIONER FOR PATENTS
P.O. Box 1450
Alexandria, Virginia 22313-1450
www.uspto.gov

PATRICK W. RASCHE
ARMSTRONG TEASDALE LLP
ONE METROPOLITAN SQUARE, SUITE 2600
ST. LOUIS, MO 63102-2740

Mail Date: 05/18/2010

Applicant	: Charles Foxman	: DECISION ON REQUEST FOR
Patent Number	: 7621854	: RECALCULATION of PATENT
Issue Date	: 11/24/2009	: TERM ADJUSTMENT IN VIEW
Application No	: 10/858,136	: OF WYETH AND NOTICE OF INTENT TO
Filed	: 06/01/2004	: ISSUE CERTIFICATE OF CORRECTION
		:

The Request for Recalculation is **GRANTED** to the extent indicated.

The patent term adjustment has been determined to be **198** days. The USPTO will *sua sponte* issue a certificate of correction reflecting the amount of PTA days determined by the recalculation.

Prior to the issuance of the certificate of correction, the USPTO will afford patentee an opportunity to be heard and request reconsideration. Accordingly, patentee has **one month or thirty (30) days**, whichever is longer, to file a request for reconsideration of this patent term adjustment calculation. See 35 U.S.C. 154(b)(3)(B)(ii) and 37 CFR 1.322(a)(4). No extensions of time will be granted under 37 CFR 1.136.

Patentee should use document code PET.OP if electronically filing a request for reconsideration of this patent term adjustment calculation. The patentee must also include the information required by 37 CFR 1.705(b)(2) and the fee required by 37 CFR 1.18(e). If patentee does not file a timely request for reconsideration of this patent term adjustment calculation including the information required by 37 CFR 1.705(b)(2) and the fee required by 37 CFR 1.18(e), the USPTO will issue a certificate of correction reflecting the PTA determination noted above.

Patentee should be aware that in order to preserve the right to review in the United States District Court for the District of Columbia of the USPTO patent term adjustment determination, patentee must ensure that he or she also take the steps required under 35 U.S.C. 154(b)(4)(A) in a timely manner. Nothing in the request for recalculation should be construed as providing an alternative time frame for commencing a civil action under 35 U.S.C. 154(b)(4)(A).

Any questions concerning this decision should be directed to the Office of Patent Legal Administration at 571-272-7702.

UNITED STATES PATENT AND TRADEMARK OFFICE

Commissioner for Patents
United States Patent and Trademark Office
P.O. Box 1450
Alexandria, VA 22313-1450
www.uspto.gov

Tanya A. Arenson
MEDLEN & CARROLL, LLP
Suite 350
101 Howard Street
San Francisco CA 94105

COPY MAILED

MAR 14 2005

OFFICE OF PETITIONS

In re Application of Sheikhnejad et al. Application No. 10/858,145 Filed: June 1, 2004 Attorney Docket No. ProNAi-09054 Title: Methods and Compositions for the Inhibition of Expression	DECISION REFUSING STATUS UNDER 37 CFR 1.47(a)

This is in response to the petition filed February 7, 2004 under 37 CFR. §1.47(a).

The petition under 37 CFR. §1.47(a) is **DISMISSED**.

Rule 47 applicant is given TWO MONTHS from the mailing date of this decision to reply, correcting the below-noted deficiencies. Any reply should be entitled "Request for Reconsideration of Petition Under 37 CFR. §1.47(a)," and should only address the deficiencies noted below, except that the reply may include an oath or declaration executed by the non-signing inventor. **Failure to respond will result in abandonment of the application**. Any extensions of time will be governed by 37 CFR. §1.136(a).

The above-identified application was filed on June 1, 2004, without an executed oath or declaration. Accordingly, on August 9, 2004, applicant was mailed a "Notice to File Missing Parts of Nonprovisional Application - Filing Date Granted," requiring for the purposes of this decision an executed oath or declaration in compliance with §1.63, and a surcharge for its late filing. This Notice set an extendable two-month period for reply of October 9, 2004.

In reply, applicant filed a petition, the surcharge for late filing of the declaration and a declaration. To make the reply timely, a four (4) month extension of time was also submitted.

A grantable petition under 37 CFR. §1.47(a) requires: (1) proof that the non-signing inventor cannot be reached or refuses to sign the oath or declaration after having been presented with the application papers (specification, claims and drawings); (2) an acceptable oath or declaration in compliance with 35 U.S.C. §§115 and 116; (3) the petition fee; and (4) a statement of the last known address of the non-signing inventor. The instant petition does

not satisfy requirements (2).

As to item (2), the declaration submitted is not in compliance with 37 CFR 1.63 . Rule 47 applicant failed to provide the citizenship of non-signing inventor pursuant to 37 CFR 1.63 (a)(3). On renewed petition, a newly executed declaration is required.

Further correspondence with respect to this matter should be addressed as follows:

By mail:	Mail Stop Petition Commissioner for Patents P.O. Box 1450 Alexandria, VA 22313-1450
By facsimile:	(703) 872-9306
By delivery service: (FedEx, UPS, DHL, etc.)	U.S. Patent and Trademark Office Customer Service Window, Randolph Building 401 Dulany Street Alexandria, VA 22314

Telephone inquiries related to this decision may be directed to the undersigned at (571) 272-3215.

Charlema R. Grant

Charlema R. Grant
Petitions Attorney
Office of Petitions

UNITED STATES PATENT AND TRADEMARK OFFICE

Commissioner for Patents
United States Patent and Trademark Office
P.O. Box 1450
Alexandria, VA 22313-1450
www.uspto.gov

Tanya A. Arenson
MEDLEN & CARROLL, LLP
Suite 350
101 Howard Street
San Francisco CA 94105

COPY MAILED

SEP 2 3 2005

OFFICE OF PETITIONS

In re Application of	:	
Reza Sheikhnejad, Mina Patel Sooch, Neal	:	DECISION GRANTING STATUS
Goodwin and David Olson	:	UNDER 37 CFR 1.47(a)
Application No.10/858,145	:	
Filed: June 1, 2004	:	
Attorney Docket Number: ProNAi-09054	:	
Title of Invention: Methods and Compositions	:	
for the Inhibition of Expression	:	

This is in response to the petition under 37 CFR 1.47(a), filed May 31, 2005 and supplemented on July 19, 2005.

The petition is GRANTED.

Petitioner has shown that the non-signing inventor Sheikhnejad has refused to join in the filing of the above-identified application after having been presented with the application papers. The petition attest a copy of the application papers was sent to non-signing inventor's last known address. Rule 47 applicant has established that the non-signing inventor refuses to execute the application papers.

The above-identified application and papers have been reviewed and found in compliance with 37 CFR 1.47(a). This application is hereby accorded Rule 1.47(a) status.

As provided in Rule 1.47(c), this Office will forward notice of this application's filing to the non-signing inventor at the address given in the petition. Notice of the filing of this application will also be published in the Official Gazette.

This application is being forwarded to the Office of Initial Patent Examination for further processing.

Telephone inquiries related to this decision may be directed to the undersigned at (571) 272-3215.

Charlema R. Grant

Charlema R. Grant
Petitions Attorney
Office of Petitions

UNITED STATES PATENT AND TRADEMARK OFFICE

Commissioner for Patents
United States Patent and Trademark Office
P.O. Box 1450
Alexandria, VA 22313-1450
www.uspto.gov

Gholamreza Sheikhnehjad
6394 Bedview Drive
Saline, MI 48176

COPY MAILED

SEP 2 3 2005

OFFICE OF PETITIONS

In re Application of
Reza Sheikhnejad, Mina Patel Sooch, Neal Goodwin and David Olson
Application No.10/858,145
Filed: June 1, 2004
Attorney Docket Number: ProNAi-09054
Title of Invention: Methods and Compositions for the Inhibition of Expression

LETTER

Dear Mr. Sheikhnehjad :

You are named as a joint inventor in the above-identified United States patent application filed under the provisions of 35 U.S.C. 116 (United States Code) and 37 C.F.R. § 1.47(a), Rules of Practice in Patent Cases. Should a patent be granted on the application you will be designated therein as a joint inventor.

As a named inventor you are entitled to inspect any paper in the file wrapper of the application, order copies of all or any part thereof (at a prepaid cost as per 37 C.F.R. § 1.19) or make your position of record in the application. Alternatively, you may arrange to do any of the preceding through a registered patent attorney or agent presenting written authorization from you. If you care to join the application, applicant (see below) would presumably assist you. Joining in the application would entail the filing of an appropriate oath or declaration by you pursuant to 37 C.F.R. § 1.63.

Telephone inquiries regarding this communication should be directed to Petitions Attorney Charlema R. Grant at (571) 272-3215. Requests for information regarding your application should be directed to the File Information Unit at (703) 308-2733. Information regarding how to pay for and order a copy of the application, or a specific paper in the application, should be directed to Certification Division at (703) 308-9726 or 1-800-972-6382 (outside the Washington D.C. area).

Charlema R. Grant

Charlema R. Grant
Petitions Attorney
Office of Petitions

Tanya A. Arenson
MEDLEN & CARROLL, LLP
Suite 350
101 Howard Street
San Francisco CA 94105

UNITED STATES PATENT AND TRADEMARK OFFICE

Commissioner for Patents
United States Patent and Trademark Office
P.O. Box 1450
Alexandria, VA 22313-1450
www.uspto.gov

MEDLEN & CARROLL, LLP
Suite 350
101 Howard Street
San Francisco CA 94105

COPY MAILED

APR 15 2005

OFFICE OF PETITIONS

In re Application of	:	
Sheikhnejad et al.	:	
Application No. 10/858,146	:	DECISION REFUSING STATUS
Filed: June 1, 2004	:	UNDER 37 CFR 1.47(a)
Attorney Docket No. PRONAI-090507	:	
Title: METHODS AND COMPOSITIONS FOR	:	
THE INHIBITION OF GENE EXPRESSION	:	

This is in response to the petition filed February 10, 2005, under 37 CFR. §1.47(a).

The petition under 37 CFR. §1.47(a) is **DISMISSED**.

Rule 47 applicant is given TWO MONTHS from the mailing date of this decision to reply, correcting the below-noted deficiencies. Any reply should be entitled "Request for Reconsideration of Petition Under 37 CFR. §1.47(a)," and should only address the deficiencies noted below, except that the reply may include an oath or declaration executed by the non-signing inventor. **Failure to respond will result in abandonment of the application**. Any extensions of time will be governed by 37 CFR. §1.136(a).

The above-identified application was filed on June 1, 2004, without an executed oath or declaration. Accordingly, on August 9, 2004, applicant was mailed a "Notice to File Missing Parts of Nonprovisional Application - Filing Date Granted," requiring for the purposes of this decision, an executed oath or declaration in compliance with §1.63, and a surcharge for its late filing. This Notice set an extendable two-month period for reply of October 9, 2004.

In reply, applicant filed a petition, the surcharge for late filing of the declaration, and a partially executed declaration. To make timely a four month extension of time was obtained. In support of the petition, applicants submitted copies of correspondence which was mailed to the non-signing inventor.

A grantable petition under 37 CFR. §1.47(a) requires: (1) proof that the non-signing inventor cannot be reached or refuses to sign the oath or declaration after having been

presented with the application papers (specification, claims and drawings); (2) an acceptable oath or declaration in compliance with 35 U.S.C. §§115 and 116; (3) the petition fee; and (4) a statement of the last known address of the non-signing inventor.

The instant petition does not satisfy requirements (2).

As to item (2), the declaration submitted is not in compliance with 37 CFR 1.63 . Rule 47 applicant failed to provide the citizenship of all of the inventors pursuant to 37 CFR 1.63 (a)(3). Specifically, petitioner failed to provide the citizenship of inventor Sheikhnejad. On renewed petition, a newly executed declaration is required.

Further correspondence with respect to this matter should be addressed as follows:

By mail:	Mail Stop Petition Commissioner for Patents P.O. Box 1450 Alexandria, VA 22313-1450
By facsimile:	(703) 872-9306
By delivery service: (FedEx, UPS, DHL, etc.)	U.S. Patent and Trademark Office Customer Service Window, Randolph Building 401 Dulany Street Alexandria, VA 22314

Telephone inquiries related to this decision may be directed to the undersigned at (571) 272-3215.

Charlema R. Grant

Charlema R. Grant
Petitions Attorney
Office of Petitions

UNITED STATES PATENT AND TRADEMARK OFFICE

Commissioner for Patents
United States Patent and Trademark Office
P.O. Box 1450
Alexandria, VA 22313-1450
www.uspto.gov

MEDLEN & CARROLL, LLP
Suite 350
101 Howard Street
San Francisco CA 94105

COPY MAILED

AUG 0 3 2005

OFFICE OF PETITIONS

In re Application of Reza Sheikhnejad, Mina Patel Sooch, Neal Goodwin, David Olson Application No.10/858,146 Filed: June 1, 2004 Attorney Docket No. PRONAI-09057 Title of Invention: METHODS AND COMPOSITIONS FOR THE INHIBITION OF GENE EXPRESSION	DECISION GRANTING STATUS UNDER 37 CFR 1.47(A)

This is in response to the renewed petition under 37 CFR 1.47(a) filed June 17, 2005 .

The petition is GRANTED.

Petitioner has shown that non-signing inventor Sheikhnejad has refused to join in the filing of the above-identified application after having been presented with the application papers. The petition attest a copy of the application was sent to non-signing inventor's last known address. Sufficient evidence has been presented to establish that non-signing inventor refuses to execute the application papers.

The above-identified application and papers have been reviewed and found in compliance with 37 CFR 1.47(a). This application is hereby accorded Rule 1.47(a) status.

As provided in Rule 1.47(c), this Office will forward notice of this application's filing to the non-signing inventor at the address given in the petition. Notice of the filing of this application will also be published in the Official Gazette.

After this decision is mailed, the application will be forwarded to the Office of Initial Patent Examination for further processing.

Telephone inquiries regarding this communication should be directed to the undersigned at (571) 272-3215.

Charlema R. Grant

Charlema R. Grant
Petitions Attorney
Office of Petitions

UNITED STATES PATENT AND TRADEMARK OFFICE

UNITED STATES DEPARTMENT OF COMMERCE
United States Patent and Trademark Office
Address: COMMISSIONER FOR PATENTS
P.O. Box 1450
Alexandria, Virginia 22313-1450
www.uspto.gov

DADE BEHRING INC.
LAW AND PATENTS
1717 DEERFIELD ROAD
DEERFIELD, IL 60015

Mail Date: 04/30/2010

Applicant	: Peter Louis Gebrian	: DECISION ON REQUEST FOR
Patent Number	: 7661551	: RECALCULATION of PATENT
Issue Date	: 02/16/2010	: TERM ADJUSTMENT IN VIEW
Application No	: 10/858,156	: OF WYETH AND NOTICE OF INTENT TO
Filed	: 06/01/2004	: ISSUE CERTIFICATE OF CORRECTION
		:

The Request for Recalculation is **GRANTED** to the extent indicated.

The patent term adjustment has been determined to be **999** days. The USPTO will *sua sponte* issue a certificate of correction reflecting the amount of PTA days determined by the recalculation.

Prior to the issuance of the certificate of correction, the USPTO will afford patentee an opportunity to be heard and request reconsideration. Accordingly, patentee has **one month or thirty (30) days**, whichever is longer, to file a request for reconsideration of this patent term adjustment calculation. See 35 U.S.C. 154(b)(3)(B)(ii) and 37 CFR 1.322(a)(4). No extensions of time will be granted under 37 CFR 1.136.

Patentee should use document code PET.OP if electronically filing a request for reconsideration of this patent term adjustment calculation. The patentee must also include the information required by 37 CFR 1.705(b)(2) and the fee required by 37 CFR 1.18(e). If patentee does not file a timely request for reconsideration of this patent term adjustment calculation including the information required by 37 CFR 1.705(b)(2) and the fee required by 37 CFR 1.18(e), the USPTO will issue a certificate of correction reflecting the PTA determination noted above.

Patentee should be aware that in order to preserve the right to review in the United States District Court for the District of Columbia of the USPTO patent term adjustment determination, patentee must ensure that he or she also take the steps required under 35 U.S.C. 154(b)(4)(A) in a timely manner. Nothing in the request for recalculation should be construed as providing an alternative time frame for commencing a civil action under 35 U.S.C. 154(b)(4)(A).

Any questions concerning this decision should be directed to the Office of Patent Legal Administration at 571-272-7702.

UNITED STATES PATENT AND TRADEMARK OFFICE

COMMISSIONER FOR PATENTS
UNITED STATES PATENT AND TRADEMARK OFFICE
P.O. BOX 1450
ALEXANDRIA, VA 22313-1450
WWW.USPTO.GOV

Paper No. None

MEDLEN & CARROLL, LLP
Suite 350
101 Howard Street
San Francisco CA 94105

COPY MAILED

MAY 2 3 2005

OFFICE OF PETITIONS

In re Application of

Reza Sheikhnejad, Mina Patel Sooch, Neal Goodwin, and David Olson
Application No. 10/858,164
Filed: June 1, 2004
Attorney Docket No. ProNAi-07104
Title: METHODS AND COMPOSITIONS FOR THE INHIBITION OF GENE EXPRESSION

DECISION ON PETITION UNDER 37 C.F.R. §1.47(a)

This is in response to the petition under 37 C.F.R. §1.47(a)[1], filed February 3, 2005.

On June 1, 2004, the application was deposited, identifying Reza Sheikhnejad, Mina Patel Sooch, Neal Goodwin, and David Olson as joint inventors. No oath or declaration was included on filing. On August 9, 2004, a "Notice to File Missing Parts of Nonprovisional Application – Filing Date Granted" (Notice) was mailed, indicating that a fully executed oath or declaration and the associated surcharge were required, along with a CRF, a copy of the sequence listing, and an amendment directing its entry. This Notice set a two-month period for reply.

1A grantable petition under 37 C.F.R. §1.47(a) requires:
(1) the petition fee of $130;
(2) a surcharge of either $65 or $130 if the petition is not filed at the time of filing the application, as set forth in 37 CFR § 1.16(e);
(3) a statement of the last known address of the non-signing inventors;
(4) either
a) proof that a copy of the entire application (specification, claims, drawings, and the oath or declaration) was sent or given to the non-signing inventor for review and proof that the non-signing inventor refuses to join in the application or
b) proof that the non-signing inventor cannot be found or reached after diligent effort;
(5) a declaration which complies with 37 CFR §1.63.

With the instant petition, Petitioner has also submitted the petition fee[2], the associated surcharge, the last known address of the non-signing inventor, a declaration which has been executed by each of the inventors save Mr. Sheikhnejad, and a statement of facts. Petitioner has further included a four-month extension of time to make timely this response.

Petitioner has met each of the 5 requirements above.

The petition is **GRANTED** and this application is hereby accorded Rule §1.47(a) status.

As provided in Rule 1.47(a), this Office will forward notice of this application's filing to the non-signing inventor at the address given in the petition. Notice of the filing of this application will also be published in the Official Gazette.

After this decision is mailed, the application will be forwarded to Technology Center 1600 for further processing.

The general phone number for the Office of Petitions which should be used for status requests is (571) 272-3282. Telephone inquiries regarding *this decision* should be directed to the undersigned at (571) 272-3225.

Paul Shanoski
Senior Attorney
Office of Petitions
United States Patent and Trademark Office

2 Petitioner has included $130, when the amount due is $200. The deficiency has been charged to Petitioner's Deposit Account.

UNITED STATES PATENT AND TRADEMARK OFFICE

COMMISSIONER FOR PATENTS
UNITED STATES PATENT AND TRADEMARK OFFICE
P.O. BOX 1450
ALEXANDRIA, VA 22313-1450
WWW.USPTO.GOV

Reza Sheikhnejad,
16400 JL Hudson Drive, #323
Southfield, MI 48075

COPY MAILED

MAY 2 3 2005

OFFICE OF PETITIONS

In re Application of

Reza Sheikhnejad, Mina Patel Sooch, Neal Goodwin, and David Olson
Application No. 10/858,164
Filed: June 1, 2004
Attorney Docket No. ProNAi-07104
Title: METHODS AND COMPOSITIONS FOR THE INHIBITION OF GENE EXPRESSION

LETTER

Dear Mr. Sheikhnejad:

You are named as a joint inventor in the above-identified United States patent application filed under the provisions of 35 U.S.C. 116 (United States Code) and 37 CFR 1.47(a), Rules of Practice in Patent Cases. Should a patent be granted on the application you will be designated therein as a joint inventor.

As a named inventor you are entitled to inspect any paper in the file wrapper of the application, order copies of all or any part thereof (at a prepaid cost per 37 CFR 1.19) or make your position of record in the application. Alternatively, you may arrange to do any of the preceding through a registered patent attorney or agent presenting written authorization from you. If you care to join the application, the attorney of record below would presumably assist you. Joining in the application would entail the filing of an appropriate oath or declaration by you pursuant to 37 CFR 1.63.

Telephone inquiries regarding this communication should be directed to the undersigned at (571) 272-3225. Requests for information regarding your application should be directed to the File Information Unit at (703) 308-2733. Information regarding how to pay for and order a copy of the application, or a specific paper in the application, should be directed to the Certification Division at (703) 308-9726 or 1-800-972-6382 (outside the Washington D.C. area).

cc: MEDLEN & CARROLL, LLP
Suite 350
101 Howard Street
San Francisco CA 94105

UNITED STATES PATENT AND TRADEMARK OFFICE

COMMISSIONER FOR PATENTS
UNITED STATES PATENT AND TRADEMARK OFFICE
P.O. BOX 1450
ALEXANDRIA, VA 22313-1450
WWW.USPTO.GOV

Paper No. None

MEDLEN & CARROLL, LLP
Suite 350
101 Howard Street
San Francisco CA 94105

COPY MAILED

MAY 2 4 2005

OFFICE OF PETITIONS

In re Application of :
Reza Sheikhnejad, Mina Patel Sooch, Neal Goodwin, and David Olson :
Application No. 10/858,164 :
Filed: June 1, 2004 :
Attorney Docket No. ProNAi-07104 :
Title: METHODS AND COMPOSITIONS FOR THE INHIBITION OF GENE EXPRESSION :

CORRECTED DECISION ON PETITION UNDER 37 C.F.R. §1.47(a)

This is in response to the petition under 37 C.F.R. §1.47(a)[1], filed February 3, 2005.

On June 1, 2004, the application was deposited, identifying Reza Sheikhnejad, Mina Patel Sooch, Neal Goodwin, and David Olson as joint inventors. No oath or declaration was included on filing. On August 9, 2004, a "Notice to File Missing Parts of Nonprovisional Application – Filing Date Granted" (Notice) was mailed, indicating that a fully executed oath or declaration and the associated surcharge were required, along with a CRF, a copy of the sequence listing, and an amendment directing its entry. This Notice set a two-month period for reply.

1A grantable petition under 37 C.F.R. §1.47(a) requires:
(1) the petition fee of $130;
(2) a surcharge of either $65 or $130 if the petition is not filed at the time of filing the application, as set forth in 37 CFR § 1.16(e);
(3) a statement of the last known address of the non-signing inventors;
(4) either
a) proof that a copy of the entire application (specification, claims, drawings, and the oath or declaration) was sent or given to the non-signing inventor for review and proof that the non-signing inventor refuses to join in the application or
b) proof that the non-signing inventor cannot be found or reached after diligent effort;
(5) a declaration which complies with 37 CFR §1.63.

On May 23, 2005, a decision was mailed which indicated that the petition of February 3, 2005 was granted.

The Office regrets this error. The decision of February 3, 2005 is hereby **VACATED**.

It has since been noted that the declaration submitted with the present petition fails to indicate the citizenship of the non-signing joint inventor. As such, the declaration fails to comply with 37 C.F.R. §1.63, and Petitioner has failed to meet requirement 5 above.

Hence, the petition is **DISMISSED**.

Any reply must be submitted within **TWO (2) MONTHS** from the mail date of this decision. Extensions of time under 37 C.F.R. §1.136(a) are permitted. The reply should include a cover letter entitled "Renewed Petition Under 37 C.F.R. 1.47(a)," and should include a declaration which indicates the citizenship of the non-signing joint inventor. This is not a final agency action within the meaning of 5 U.S.C 704.

The renewed petition should indicate in a prominent manner that the attorney handling this matter is Paul Shanoski.

Any renewed petition may be submitted by mail[2], hand-delivery[3], or facsimile[4].

The application file will be retained in the Office of Petitions for two (2) months.

The general phone number for the Office of Petitions which should be used for status requests is (571) 272-3282. Telephone inquiries regarding *this decision* should be directed to the undersigned at (571) 272-3225.

Paul Shanoski

Paul Shanoski
Senior Attorney
Office of Petitions
United States Patent and Trademark Office

2 Mail Stop Petition, Commissioner for Patents, United States Patent and Trademark Office, P.O. Box 1450, Alexandria, VA, 22313-1450.
3 Customer Window, Randolph Building, 401 Dulaney Street, Alexandria, VA, 22314.
4 (703) 872-9306 - please note this is a central facsimile number, and as such, there will be a delay in the delivery of the facsimile to the undersigned, which could be as much as one month.

UNITED STATES PATENT AND TRADEMARK OFFICE

COMMISSIONER FOR PATENTS
UNITED STATES PATENT AND TRADEMARK OFFICE
P.O. BOX 1450
ALEXANDRIA, VA 22313-1450
WWW.USPTO.GOV

Paper No. None

MEDLEN & CARROLL, LLP
Suite 350
101 Howard Street
San Francisco CA 94105

COPY MAILED
NOV 17 2006
OFFICE OF PETITIONS

In re Application of	:	
Reza Sheikhnejad, Mina Patel Sooch, Neal Goodwin, and David Olson	:	DECISION ON RENEWED PETITION UNDER 37 C.F.R. §1.47(a)
Application No. 10/858,164	:	
Filed: June 1, 2004	:	
Attorney Docket No. ProNAi-07104	:	
Title: METHODS AND COMPOSITIONS FOR THE INHIBITION OF GENE EXPRESSION	:	

This is in response to the renewed petition under 37 C.F.R. §1.47(a)[1], filed July 27, 2005.

Petitioner placed serial number "10/858,145" (emphasis added) on this renewed petition, and as such, the present petition was

---

1A grantable petition under 37 C.F.R. §1.47(a) requires:
(1) the petition fee of $130;
(2) a surcharge of either $65 or $130 if the petition is not filed at the time of filing the application, as set forth in 37 CFR § 1.16(e);
(3) a statement of the last known address of the non-signing inventors;
(4) either
a) proof that a copy of the entire application (specification, claims, drawings, and the oath or declaration) was sent or given to the non-signing inventor for review and proof that the non-signing inventor refuses to join in the application or
b) proof that the non-signing inventor cannot be found or reached after diligent effort;
(5) a declaration which complies with 37 CFR §1.63.

mistakenly associated with the wrong electronic file. The submission has since been removed from this electronic file, and placed into the electronic file associated with the correct application.

With prevenient submissions, Petitioner has met requirements (1) - (4) of Rule §1.47(a). A decision on the original petition was mailed on May 23, 2005, erroneously granting the petition. A corrected decision was mailed on May 24, 2005, dismissing the petition. The declaration could not be accepted, as it did not contain the citizenship of the non-signing joint inventor, Reza Sheikhnejad.

With this renewed petition, Petitioner has submitted a declaration which has been executed by each of the previously signing joint inventors, and indicates the citizenship of the non-signing joint inventor.

It is noted that the Power of Attorney submitted on June 1, 2004 and the declaration submitted on February 3, 2005 each refers to this inventor as "Reza Sheikhnejad," whereas the declaration submitted with this renewed petition refers to him as "Gholamreza Sheikhnejad."

Pursuant to 37 C.F.R. §1.48(f)(1), inventorship is set by the first submission of an executed declaration. As such, the inventor's first name was set as "Reza" upon receipt of the partially-executed declaration on February 3, 2005.

Petitioner has two choices:

- The inventor can continue to be listed as "Reza." The declaration which was received with the present renewed petition will not be entered, and the deficiency in the declaration of February 3, 2005 can be corrected via the submission of an Application Data Sheet (ADS) which provides the citizenship of this inventor, or:
- Petitioner may seek to update Office records so that the first name of the non-signing joint inventor will be listed as "Gholamreza." The declaration which was submitted with this renewed petiton will be entered, and this will require the submission of petitions under 37 C.F.R. §§ 1.183 to waive 1.48(1), along with a petition under Rule §1.182 to change the spelling of this inventor's first name.

For the above reasons, the petition must be **DISMISSED**.

Any reply must be submitted within **TWO MONTHS** from the mail date of this decision. Extensions of time under 37 C.F.R. §1.136(a)

are permitted. The reply should include a cover letter entitled "Second Renewed Petition Under 37 C.F.R. 1.47(a)". This is not a final agency action within the meaning of 5 U.S.C 704. The renewed petition should indicate in a prominent manner that the attorney handling this matter is Paul Shanoski, and may be submitted by mail[2], hand-delivery[3], or facsimile[4].

Telephone inquiries regarding *this decision* should be directed to the undersigned at (571) 272-3225[5]. All other inquiries concerning examination procedures or status of the application should be directed to the Technology Center.

Paul Shanoski
Senior Attorney
Office of Petitions
United States Patent and Trademark Office

---

2 Mail Stop Petition, Commissioner for Patents, United States Patent and Trademark Office, P.O. Box 1450, Alexandria, VA, 22313-1450.
3 Customer Window, Randolph Building, 401 Dulaney Street, Alexandria, VA, 22314.
4 (571) 273-8300- please note this is a central facsimile number.
5 Petitioner will note that all practice before the Office should be in writing, and the action of the Office will be based exclusively on the written record in the Office. See 37 C.F.R. §1.2. As such, Petitioner is reminded that no telephone discussion may be controlling or considered authority for Petitioner's further action(s).

UNITED STATES PATENT AND TRADEMARK OFFICE

COMMISSIONER FOR PATENTS
UNITED STATES PATENT AND TRADEMARK OFFICE
P.O. BOX 1450
ALEXANDRIA, VA 22313-1450
WWW.USPTO.GOV

Paper No. None

Jonathan P. O'Brien, Ph.D.
Miller, Canfield, Paddock and Stone
444 West Michigan Avenue
Kalamazoo MI 49007

COPY MAILED

APR 16 2007

OFFICE OF PETITIONS

In re Application of :
Reza Sheikhnejad, Mina Patel :
Sooch, Neal Goodwin, and David :
Olson :
Application No. 10/858,164 :
Filed: June 1, 2004 :
Attorney Docket No. ProNAi- :
07104
Title: METHODS AND COMPOSITIONS :
FOR THE INHIBITION OF GENE :
EXPRESSION :

DECISION NOTING JOINDER AND DISMISSING SECOND RENEWED PETITION UNDER 37 C.F.R. §1.47(A) AS MOOT

This is in response to the second renewed petition under 37 C.F.R. §1.47(a)[1], filed March 12, 2007.

1A grantable petition under 37 C.F.R. §1.47(a) requires:

(1) the petition fee of $130;
(2) a surcharge of either $65 or $130 if the petition is not filed at the time of filing the application, as set forth in 37 CFR § 1.16(e);
(3) a statement of the last known address of the non-signing inventors;
(4) either
  a) proof that a copy of the entire application (specification, claims, drawings, and the oath or declaration) was sent or given to the non-signing inventor for review and proof that the non-signing inventor refuses to join in the application or
  b) proof that the non-signing inventor cannot be found or reached after diligent effort;
(5) a declaration which complies with 37 CFR §1.63.

On June 1, 2004, the application was deposited, identifying Reza Sheikhnejad, Mina Patel Sooch, Neal Goodwin, and David Olson as joint inventors. No oath or declaration was included on filing. On August 9, 2004, a "Notice to File Missing Parts of Nonprovisional Application - Filing Date Granted" (Notice) was mailed, indicating that a fully executed oath or declaration and the associated surcharge were required, along with a CRF, a copy of the sequence listing, and an amendment directing its entry. This Notice set a two-month period for reply.

With this second renewed petition, Petitioner has submitted an acceptable declaration that has been executed by the previously non-signing inventor. Petitioner has further included a two-month extension of time to make timely this response.

As such, this second renewed petition is **DISMISSED AS MOOT**.

In view of the joinder of the joint inventor, further consideration under 37 C.F.R. §1.47(a) is not necessary and the petition is considered moot. This application does not have any Rule 1.47(a) status and no such status should appear on the file wrapper. This application need not be returned to this Office for further consideration under 37 C.F.R. §1.47(a).

The Technology Center will be notified of this decision, so that the present application can receive further processing.

Telephone inquiries regarding this decision should be directed to the undersigned at (571) 272-3225. All other inquiries concerning examination procedures or status of the application should be directed to the Technology Center.

Paul Shanoski
Senior Attorney
Office of Petitions
United States Patent and Trademark Office

UNITED STATES PATENT AND TRADEMARK OFFICE

Commissioner for Patents
United States Patent and Trademark Office
P.O. Box 1450
Alexandria, VA 22313-1450
www.uspto.gov

PILLSBURY WINTHROP SHAW PITTMAN, LLP
P.O. BOX 10500
MCLEAN VA 22102

COPY MAILED

NOV 16 2007

OFFICE OF PETITIONS

In re Application of	:	
DeCarlo et al.	:	
Application No. 10/858170	:	DECISION ON PETITION
Filed: 06/01/2004	:	UNDER 37 CFR 1.78(a)(6)
Attorney Docket No. 039603-0316653	:	

This is a decision on the petition under 37 CFR 1.78(a)(6), filed on 13 September, 2007, to accept an unintentionally delayed claim under 35 U.S.C. §119(e) for the benefit of the prior-filed provisional application set forth in the concurrently filed amendment.

The petition is **GRANTED.**

A petition under 37 CFR 1.78(a)(6) is only applicable to those applications filed on or after November 29, 2000. Further, the petition is appropriate only after expiration of the period specified in 37 CFR 1.78(a)(5)(ii) and must be filed during the pendency of the nonprovisional application. In addition, the petition must be accompanied by:

(1) the reference required by 35 U.S.C. § 119(e) and 37 CFR 1.78(a)(5)(i) to the prior-filed application, unless previously submitted;
(2) the surcharge set forth in § 1.17(t); and
(3) a statement that the entire delay between the date the claim was due under 37 CFR 1.78(a)(5)(ii) and the date the claim was filed was unintentional. The Director may require additional information where there is a question whether the delay was unintentional.

Additionally, the instant nonprovisional application must be pending at the time of filing of the reference to the prior-filed provisional application as required by 37 CFR 1.78(a)(5)(ii). Further, the nonprovisional application claiming the benefit of the prior-filed provisional application must have been filed within twelve months of the filing date of the prior-filed provisional application.

All of the above requirements having been satisfied, the late claim for priority under 35 U.S.C. § 119(e) is accepted as being unintentionally delayed.

The granting of the petition to accept the delayed benefit claim to the prior-filed application under 37 CFR 1.78(a)(6) should not be construed as meaning that this application is entitled to the benefit of the filing date of the prior-filed application. In order for this application to be entitled to the benefit of the prior-filed application, all other requirements under 35 U.S.C. §119(e) and 37 CFR 1.78(a)(4) and (a)(5) must be met. Similarly, the fact that the corrected Filing Receipt accompanying this decision on petition includes the prior-filed application should not be construed as meaning that applicant is entitled to the claim for benefit of priority to the prior-filed application noted thereon. Accordingly, the examiner will, in due course, consider this benefit claim and determine whether the application is entitled to the benefit of the earlier filing date.

A corrected Filing Receipt, which includes the priority claim to the prior-filed provisional application, accompanies this decision on petition.

Any inquiries concerning this decision may be directed to Senior Petitions Attorney Douglas I. Wood at (571) 272-3231. All other inquiries concerning either the examination procedures or status of the application should be directed to the Technology Center.

The application is being forwarded to Technology Center AU 3781 for consideration by the examiner of the claim under 35 U.S.C. §119(e) for the benefit of priority to the prior-filed provisional application.

Anthony Knight
Supervisor
Office of Petitions

ATTACHMENT: Corrected Filing Receipt

UNITED STATES PATENT AND TRADEMARK OFFICE

UNITED STATES DEPARTMENT OF COMMERCE
United States Patent and Trademark Office
Address: COMMISSIONER FOR PATENTS
P.O. Box 1450
Alexandria, Virginia 22313-1450
www.uspto.gov

APPL NO.	FILING OR 371 (c) DATE	ART UNIT	FIL FEE REC'D	ATTY.DOCKET NO	DRAWINGS	TOT CLMS	IND CLMS
10/858,170	06/01/2004	3727	385	IDST . P0101USA	8	16	2

First

CONFIRMATION NO. 4967

FILING RECEIPT

OC000000013331735

23908
RENNER OTTO BOISSELLE & SKLAR, LLP
1621 EUCLID AVENUE
NINETEENTH FLOOR
CLEVELAND, OH 44115

Date Mailed: 07/27/2004

Receipt is acknowledged of this regular Patent Application. It will be considered in its order and you will be notified as to the results of the examination. Be sure to provide the U.S. APPLICATION NUMBER, FILING DATE, NAME OF APPLICANT, and TITLE OF INVENTION when inquiring about this application. Fees transmitted by check or draft are subject to collection. Please verify the accuracy of the data presented on this receipt. **If an error is noted on this Filing Receipt, please write to the Office of Initial Patent Examination's Filing Receipt Corrections, facsimile number 703-746-9195. Please provide a copy of this Filing Receipt with the changes noted thereon. If you received a "Notice to File Missing Parts" for this application, please submit any corrections to this Filing Receipt with your reply to the Notice. When the USPTO processes the reply to the Notice, the USPTO will generate another Filing Receipt incorporating the requested corrections (if appropriate).**

Applicant(s)

Anthony J. DeCarlo, Bay Village, OH;
Daniel V. Perella, Hudson, OH;
Vincent J. Thomson, Avon Lake, OH;

Domestic Priority data as claimed by applicant

This appln claims benefit of 60/474,698 05/30/2003 *
(*)Data provided by applicant is not consistent with PTO records.

Foreign Applications

If Required, Foreign Filing License Granted: 07/23/2004

Projected Publication Date: To Be Determined - pending completion of Missing Parts

Non-Publication Request: No

Early Publication Request: No

**** SMALL ENTITY ****

Title

Collapsible storage container for office and personal use

Preliminary Class

220

LICENSE FOR FOREIGN FILING UNDER
Title 35, United States Code, Section 184
Title 37, Code of Federal Regulations, 5.11 & 5.15

GRANTED

The applicant has been granted a license under 35 U.S.C. 184, if the phrase "IF REQUIRED, FOREIGN FILING LICENSE GRANTED" followed by a date appears on this form. Such licenses are issued in all applications where the conditions for issuance of a license have been met, regardless of whether or not a license may be required as set forth in 37 CFR 5.15. The scope and limitations of this license are set forth in 37 CFR 5.15(a) unless an earlier license has been issued under 37 CFR 5.15(b). The license is subject to revocation upon written notification. The date indicated is the effective date of the license, unless an earlier license of similar scope has been granted under 37 CFR 5.13 or 5.14.

This license is to be retained by the licensee and may be used at any time on or after the effective date thereof unless it is revoked. This license is automatically transferred to any related applications(s) filed under 37 CFR 1.53(d). This license is not retroactive.

The grant of a license does not in any way lessen the responsibility of a licensee for the security of the subject matter as imposed by any Government contract or the provisions of existing laws relating to espionage and the national security or the export of technical data. Licensees should apprise themselves of current regulations especially with respect to certain countries, of other agencies, particularly the Office of Defense Trade Controls, Department of State (with respect to Arms, Munitions and Implements of War (22 CFR 121-128)); the Office of Export Administration, Department of Commerce (15 CFR 370.10 (j)); the Office of Foreign Assets Control, Department of Treasury (31 CFR Parts 500+) and the Department of Energy.

NOT GRANTED

No license under 35 U.S.C. 184 has been granted at this time, if the phrase "IF REQUIRED, FOREIGN FILING LICENSE GRANTED" DOES NOT appear on this form. Applicant may still petition for a license under 37 CFR 5.12, if a license is desired before the expiration of 6 months from the filing date of the application. If 6 months has lapsed from the filing date of this application and the licensee has not received any indication of a secrecy order under 35 U.S.C. 181, the licensee may foreign file the application pursuant to 37 CFR 5.15(b).

UNITED STATES PATENT AND TRADEMARK OFFICE

UNITED STATES DEPARTMENT OF COMMERCE
United States Patent and Trademark Office
Address: COMMISSIONER FOR PATENTS
P.O. Box 1450
Alexandria, Virginia 22313-1450
www.uspto.gov

DICKSTEIN SHAPIRO LLP
1633 Broadway
NEW YORK, NY 10019

Mail Date: 04/20/2010

Applicant	: Mutsumi Maeda	: DECISION ON REQUEST FOR
Patent Number	: 7645838	: RECALCULATION of PATENT
Issue Date	: 01/12/2010	: TERM ADJUSTMENT IN VIEW
Appliction No	: 10/858,180	: OF WYETH AND NOTICE OF INTENT TO
Filed	: 06/01/2004	: ISSUE CERTIFICATE OF CORRECTION
		:

The Request for Recalculation is **GRANTED** to the extent indicated.

The patent term adjustment has been determined to be **0** days. The USPTO will *sua sponte* issue a certificate of correction reflecting the amount of PTA days determined by the recalculation.

Prior to the issuance of the certificate of correction, the USPTO will afford patentee an opportunity to be heard and request reconsideration. Accordingly, patentee has **one month or thirty (30) days**, whichever is longer, to file a request for reconsideration of this patent term adjustment calculation. See 35 U.S.C. 154(b)(3)(B)(ii) and 37 CFR 1.322(a)(4). No extensions of time will be granted under 37 CFR 1.136.

Patentee should use document code PET.OP if electronically filing a request for reconsideration of this patent term adjustment calculation. The patentee must also include the information required by 37 CFR 1.705(b)(2) and the fee required by 37 CFR 1.18(e). If patentee does not file a timely request for reconsideration of this patent term adjustment calculation including the information required by 37 CFR 1.705(b)(2) and the fee required by 37 CFR 1.18(e), the USPTO will issue a certificate of correction reflecting the PTA determination noted above.

Patentee should be aware that in order to preserve the right to review in the United States District Court for the District of Columbia of the USPTO patent term adjustment determination, patentee must ensure that he or she also take the steps required under 35 U.S.C. 154(b)(4)(A) in a timely manner. Nothing in the request for recalculation should be construed as providing an alternative time frame for commencing a civil action under 35 U.S.C. 154(b)(4)(A).

Any questions concerning this decision should be directed to the Office of Patent Legal Administration at 571-272-7702.

UNITED STATES PATENT AND TRADEMARK OFFICE

UNITED STATES DEPARTMENT OF COMMERCE
United States Patent and Trademark Office
Address: COMMISSIONER FOR PATENTS
P.O. Box 1450
Alexandria, Virginia 22313-1450
www.uspto.gov

CESARI AND MCKENNA, LLP
88 BLACK FALCON AVENUE
BOSTON, MA 02210

Mail Date: 05/04/2010

Applicant	: John Eric Hoffmann	: DECISION ON REQUEST FOR
Patent Number	: 7668881	: RECALCULATION of PATENT
Issue Date	: 02/23/2010	: TERM ADJUSTMENT IN VIEW
Application No	: 10/858,182	: OF WYETH AND NOTICE OF INTENT TO
Filed	: 06/01/2004	: ISSUE CERTIFICATE OF CORRECTION
		:

The Request for Recalculation is **GRANTED** to the extent indicated.

The patent term adjustment has been determined to be **693** days. The USPTO will *sua sponte* issue a certificate of correction reflecting the amount of PTA days determined by the recalculation.

Prior to the issuance of the certificate of correction, the USPTO will afford patentee an opportunity to be heard and request reconsideration. Accordingly, patentee has **one month or thirty (30) days**, whichever is longer, to file a request for reconsideration of this patent term adjustment calculation. See 35 U.S.C. 154(b)(3)(B)(ii) and 37 CFR 1.322(a)(4). No extensions of time will be granted under 37 CFR 1.136.

Patentee should use document code PET.OP if electronically filing a request for reconsideration of this patent term adjustment calculation. The patentee must also include the information required by 37 CFR 1.705(b)(2) and the fee required by 37 CFR 1.18(e). If patentee does not file a timely request for reconsideration of this patent term adjustment calculation including the information required by 37 CFR 1.705(b)(2) and the fee required by 37 CFR 1.18(e), the USPTO will issue a certificate of correction reflecting the PTA determination noted above.

Patentee should be aware that in order to preserve the right to review in the United States District Court for the District of Columbia of the USPTO patent term adjustment determination, patentee must ensure that he or she also take the steps required under 35 U.S.C. 154(b)(4)(A) in a timely manner. Nothing in the request for recalculation should be construed as providing an alternative time frame for commencing a civil action under 35 U.S.C. 154(b)(4)(A).

Any questions concerning this decision should be directed to the Office of Patent Legal Administration at 571-272-7702.

UNITED STATES PATENT AND TRADEMARK OFFICE

Commissioner for Patents
United States Patent and Trademark Office
P.O. Box 1450
Alexandria, VA 22313-1450
www.uspto.gov

PEARNE & GORDON LLP
1801 EAST 9TH STREET, SUITE 1200
CLEVELAND, OH 44114-3108

COPY MAILED

FEB 15 2006

OFFICE OF PETITIONS

In re Application of	:	
Ed Bearse et al	:	
Application No. 10/858,184	:	DECISION ON PETITION
Filed: June 1, 2004	:	TO MAKE SPECIAL UNDER
Attorney Docket No. 10147-3	:	37 CFR 1.102(c)(2)
	:	

This is a decision on the petition under 37 CFR 1.102(c) (2)(ii), filed January 9, 2006, to make the above-identified application special based on the invention materially contributing to the development or conservation of energy resources as set forth in M.P.E.P. § 708.02, Section VI.

The petition is **DISMISSED**.

A grantable petition to make an application special under 37 CFR 1.102(c)(ii) and MPEP § 708.02, Section VI: Energy, must state how the invention materially contributes to (A) the discovery or development of energy resources, or (b) the more efficient utilization and conservation of energy resources. If the disclosure is not clear on its face that the claimed invention materially contributes category (A) or (B), the petition must be accompanied by a statement by the applicant, assignee, or an attorney/agent registered to practice before the Office explaining how the materiality standard is met. Examples of inventions in category (A) would be developments in fossil fuels (natural gas, coal, and petroleum), hydrogen fuel technologies, nuclear energy, solar energy, etc. Category (B) would include inventions relating to the reduction of energy consumption in combustion systems, industrial equipment, household appliances, etc. No fee is required.

The claimed device are directed toward a method of making a thermoplastic pallet and the thermoplastic pallet. Applicant's declaration in support of the instant petition to make special urges simply that the invention will contribute to the more efficient utilization and conservation of energy resources because the pallet is lighter in weight than wood pallets and thus saves fuel when shipped. However, it is notoriously old in the art to use thermoplastic pallets (e.g., U.S. Patent Nos. 6,352,039, 6,294,114, 5,685,233, and 3,562,375) because they are lighter in weight as well as other attributes, such as more economical and easily recyclable. Therefore, it is not clear how applicant's invention would actually materially contribute to the conservation of energy resources any more than the existing and well known technology in this field.

Further correspondence with respect to this matter should be addressed as follows:

By Mail: Mail Stop PETITION
Commissioner for Patents
P. O. Box 1450
Alexandria, VA 22313-1450

By hand: U. S. Patent and Trademark Office
Customer Service Window, Mail Stop Petitions
Randolph Building
401 Dulany Street
Alexandria, VA 22314

By FAX: (571) 273-8300

Telephone inquiries concerning this decision should be directed to Irvin Dingle at 571-272-3210.

All other inquiries concerning either the examination or status of the application should be directed to the Technology Center.

The application is being forwarded to the Technology Center Art Unit 3637 for action in its regular turn.

Denise Pothier
Petitions Examiner
Office of Petitions

UNITED STATES PATENT AND TRADEMARK OFFICE

Commissioner for Patents
United States Patent and Trademark Office
P.O. Box 1450
Alexandria, VA 22313-1450
www.uspto.gov

KAMMER BROWNING PLLC
7700 BROADWAY SUITE 202
SAN ANTONIO TX 78209

COPY MAILED

SEP 01 2006

OFFICE OF PETITIONS

In re Application of	:	
William F. Leeper II.	:	
Application No. 10/858,187	:	ON PETITION
Filed: June 1, 2004	:	
Attorney Docket No. 1039.01	:	

This is a decision on the petition filed on March 30, 2006, pursuant to 37 CFR 1.137(b), to revive the above-identified application.

The petition is **GRANTED**.

The above-identified application became abandoned for failure to timely file a reply to the Office action mailed on December 29, 2004, which set a shortened period for reply of one (1) month. No extensions of time under 37 CFR 1.136(a) were obtained. Accordingly, no reply having been received, the application became abandoned on January 30, 2005. A Notice of Abandonment was mailed on July 13, 2005.

With the instant petition, applicant paid the petition fee, submitted the required reply in the form of an Election, and made the proper statement of unintentional delay.

The matter is being forwarded to Group Art Unit 2831 for consideration of the Election, filed March 30, 2006.

Telephone inquiries concerning this decision should be directed to the undersigned at (571)272-3207.

Cliff Congo
Petitions Attorney
Office of Petitions

UNITED STATES PATENT AND TRADEMARK OFFICE

Commissioner for Patents
United States Patent and Trademark Office
P.O. Box 1450
Alexandria, VA 22313-1450
www.uspto.gov

MERCHANT & GOULD (MICROSOFT)
P.O. BOX 2903
MINNEAPOLIS, MN 55402-0903

COPY MAILED

AUG 14 2008

OFFICE OF PETITIONS

In re Application of :
Daniel C. Battagin, et. al. :
Application No. 10/858,190 : ON PETITION
Filed: June 1, 2004 :
Attorney Docket No. :
60001.338US01/MS#308124.1 :

This is a decision on the petition under 37 CFR 1.137(b), filed February 28, 2008, to revive the above-identified application.

The application became abandoned for failure to respond to the non-final Office action mailed May 7, 2007. A Notice of Abandonment was mailed on February 5, 2008.

The petition satisfies the requirements of 37 CFR 1.137(b) in that petitioner has supplied (1) the reply in the form of an amendment; (2) the petition fee of $1,540; and (3) a proper statement of unintentional delay. Therefore, the petition is **GRANTED**.

The file does not indicate a change of address has been submitted, although the address given on the petition differs from the address of record. If appropriate, a change of address should be filed in accordance with MPEP 601.03. A courtesy copy of this decision is being mailed to the address given on the petition; however, the Office will mail all future correspondence solely to the address of record.

This application file is being referred to Technology Center Art Unit 2164 for review of the amendment filed with the instant petition.

Telephone inquiries concerning this decision should be directed to the undersigned at (571) 272-3226.

Andrea Smith
Petitions Examiner
Office of Petitions

cc: Alton Hornsby, III
133 Peachtree Street, NE
Suite 4900
Atlanta, GA 30303

UNITED STATES PATENT AND TRADEMARK OFFICE

COMMISSIONER FOR PATENTS
UNITED STATES PATENT AND TRADEMARK OFFICE
P.O. BOX 1450
ALEXANDRIA, VA 22313-1450
www.uspto.gov

FAY SHARPE FAGAN MINNICH & MCKEE LLP
1100 SUPERIOR AVENUE, SEVENTH FLOOR
CLEVELAND, OH 44114

COPY MAILED
OCT 25 2006
OFFICE OF PETITIONS

In re Application of	:	
Craig M. Saunders et al	:	
Application No. 10/858,224	:	DECISION ON PETITION
Filed: June 1, 2004	:	TO MAKE SPECIAL UNDER
Attorney Docket No. NSEE2 13483-3	:	37 CFR 1.102(d)
	:	

This is a decision on the petition under 37 CFR §1.102(d), filed June 9, 2006, to make the above-identified application special based on actual infringement as set forth in M.P.E.P. § 708.02, Section II.

The petition is **GRANTED.**

A grantable petition to make an application special under 37 CFR §1.102(d) and MPEP §708.02, Section II: Infringement, must be accompanied by the required fee pursuant to 37 CFR 1.17(h) and a statement by the applicant, assignee, or attorney/agent registered to practice before the office alleging:

> (A) That there is an infringing device or product actually on the market or method in use;
>
> (B) That a rigid comparison of the alleged infringing device, product, or method with the claims of the application has been made, and that, in his or her opinion, some of the claims are unquestionably infringed; and
>
> (C) That he or she has made or caused to be made a careful and thorough search of the prior art or has a good knowledge of the pertinent prior art.
>
> Applicant must provide one copy of each of the references deemed most closely related to the subject matter encompassed by the claims if said references are not already of record.

The petition complies with all the above stated requirements. Accordingly, the above-identified application has been accorded "special" status.

Telephone inquiries concerning this decision should be directed to Irvin Dingle at 571-272-3210.

All other inquiries concerning either the examination or status of the application should be directed to the Technology Center. In particular, the request for an interview relating to the merits of the above-identified application is not handled by the Office of Petitions, and each distinct inquiry should be filed separately in accordance with 37 CFR 1.4(c). Please note that interviews conducted prior to the first Office Action should follow the procedures in MPEP 713.01 III and 713.02.

The application is being forwarded to the Technology Center Art Unit 1714 for action on the merits commensurate with this decision.

David Bucci
Petitions Examiner
Office of Petitions

UNITED STATES PATENT AND TRADEMARK OFFICE

UNITED STATES DEPARTMENT OF COMMERCE
United States Patent and Trademark Office
Address: COMMISSIONER FOR PATENTS
P.O. Box 1450
Alexandria, Virginia 22313-1450
www.uspto.gov

MEDTRONIC, INC.
710 MEDTRONIC PARKWAY NE
MINNEAPOLIS, MN 55432-9924

Mail Date: 04/20/2010

Applicant	: Richard D. Sandstrom	: DECISION ON REQUEST FOR
Patent Number	: 7637916	: RECALCULATION of PATENT
Issue Date	: 12/29/2009	: TERM ADJUSTMENT IN VIEW
Appliction No	: 10/858,228	: OF WYETH AND NOTICE OF INTENT TO
Filed	: 06/01/2004	: ISSUE CERTIFICATE OF CORRECTION
		:

The Request for Recalculation is **GRANTED** to the extent indicated.

The patent term adjustment has been determined to be **1290** days. The USPTO will *sua sponte* issue a certificate of correction reflecting the amount of PTA days determined by the recalculation.

Prior to the issuance of the certificate of correction, the USPTO will afford patentee an opportunity to be heard and request reconsideration. Accordingly, patentee has **one month or thirty (30) days**, whichever is longer, to file a request for reconsideration of this patent term adjustment calculation. See 35 U.S.C. 154(b)(3)(B)(ii) and 37 CFR 1.322(a)(4). No extensions of time will be granted under 37 CFR 1.136.

Patentee should use document code PET.OP if electronically filing a request for reconsideration of this patent term adjustment calculation. The patentee must also include the information required by 37 CFR 1.705(b)(2) and the fee required by 37 CFR 1.18(e). If patentee does not file a timely request for reconsideration of this patent term adjustment calculation including the information required by 37 CFR 1.705(b)(2) and the fee required by 37 CFR 1.18(e), the USPTO will issue a certificate of correction reflecting the PTA determination noted above.

Patentee should be aware that in order to preserve the right to review in the United States District Court for the District of Columbia of the USPTO patent term adjustment determination, patentee must ensure that he or she also take the steps required under 35 U.S.C. 154(b)(4)(A) in a timely manner. Nothing in the request for recalculation should be construed as providing an alternative time frame for commencing a civil action under 35 U.S.C. 154(b)(4)(A).

Any questions concerning this decision should be directed to the Office of Patent Legal Administration at 571-272-7702.

UNITED STATES PATENT AND TRADEMARK OFFICE

Commissioner for Patents
United States Patent and Trademark Office
P.O. Box 1450
Alexandria, VA 22313-1450
www.uspto.gov

ROBERT A. VITALE, JR.
NIRO, SCAVONE, HALLER & NIRO
SUITE 4600
181 WEST MADISON
CHICAGO, IL 60602

COPY MAILED

AUG 2 5 2004

OFFICE OF PETITIONS

In re Application of :
Anthony N. Konstant :
Application No. 10/858,242 :
Filed: June 1, 2004 :
Attorney Docket No. 3490 :

NOTICE

This is a notice regarding your request for acceptance of a fee deficiency submission under 37 CFR 1.28. On September 1, 1998, the Court of Appeals for the Federal Circuit held that 37 CFR 1.28(c) is the sole provision governing the time for correction of the erroneous payment of the issue fee as a small entity. **See DH Technology v. Synergystex International, Inc. 154 F.3d 1333, 47 USPQ2d 1865 (Fed. Cir. Sept. 1, 1998).**

The Office no longer investigates or rejects original or reissue applications under 37 CFR 1.56. **1098 Off. Gaz. Pat. Office 502 (January 3, 1989)**. Therefore, nothing in this Notice is intended to imply that an investigation was done.

Your fee deficiency submission under 37 CFR 1.28 is hereby **ACCEPTED**.

Inquiries related to this communication should be directed to the undersigned at (703) 305-8859.

This file is being referred to the Office of Initial Patent Examination.

Karen Creasy

Karen Creasy
Petitions Examiner
Office of Petitions
Office of the Deputy Commissioner
for Patent Examination Policy

UNITED STATES PATENT AND TRADEMARK OFFICE

UNITED STATES DEPARTMENT OF COMMERCE
United States Patent and Trademark Office
Address: COMMISSIONER FOR PATENTS
P.O. Box 1450
Alexandria, Virginia 22313-1450
www.uspto.gov

NIRO, SCAVONE, HALLER & NIRO
181 W. MADISON
SUITE 4600
CHICAGO, IL 60602

Mail Date: 04/21/2010

Applicant	: Anthony N. Konstant	: DECISION ON REQUEST FOR
Patent Number	: 7614511	: RECALCULATION of PATENT
Issue Date	: 11/10/2009	: TERM ADJUSTMENT IN VIEW
Appliction No	: 10/858,242	: OF WYETH AND NOTICE OF INTENT TO
Filed	: 06/01/2004	: ISSUE CERTIFICATE OF CORRECTION
		:

The Request for Recalculation is **GRANTED** to the extent indicated.

The patent term adjustment has been determined to be **996** days. The USPTO will *sua sponte* issue a certificate of correction reflecting the amount of PTA days determined by the recalculation.

Prior to the issuance of the certificate of correction, the USPTO will afford patentee an opportunity to be heard and request reconsideration. Accordingly, patentee has **one month or thirty (30) days**, whichever is longer, to file a request for reconsideration of this patent term adjustment calculation. See 35 U.S.C. 154(b)(3)(B)(ii) and 37 CFR 1.322(a)(4). No extensions of time will be granted under 37 CFR 1.136.

Patentee should use document code PET.OP if electronically filing a request for reconsideration of this patent term adjustment calculation. The patentee must also include the information required by 37 CFR 1.705(b)(2) and the fee required by 37 CFR 1.18(e). If patentee does not file a timely request for reconsideration of this patent term adjustment calculation including the information required by 37 CFR 1.705(b)(2) and the fee required by 37 CFR 1.18(e), the USPTO will issue a certificate of correction reflecting the PTA determination noted above.

Patentee should be aware that in order to preserve the right to review in the United States District Court for the District of Columbia of the USPTO patent term adjustment determination, patentee must ensure that he or she also take the steps required under 35 U.S.C. 154(b)(4)(A) in a timely manner. Nothing in the request for recalculation should be construed as providing an alternative time frame for commencing a civil action under 35 U.S.C. 154(b)(4)(A).

Any questions concerning this decision should be directed to the Office of Patent Legal Administration at 571-272-7702.

UNITED STATES PATENT AND TRADEMARK OFFICE

Commissioner for Patents
United States Patent and Trademark Office
P.O. Box 1450
Alexandria, VA 22313-1450
www.uspto.gov

MCANDREWS HELD & MALLOY, LTD
500 WEST MADISON STREET
SUITE 3400
CHICAGO, IL 60661

COPY MAILED

SEP 07 2007

OFFICE OF PETITIONS

In re Application of :
Jordan James Nicol :
Application No. 10/858,252 : ON PETITION
Filed: June 1, 2004 :
Attorney Docket No. 17435US03 :

This is a decision on the petition under the unintentional provisions of 37 CFR 1.137(b), filed May 10, 2007, to revive the above-identified application.

The petition is **GRANTED**.

The application became abandoned for failure to timely file a reply within the meaning of 37 CFR 1.113 to the final Office action of December 6, 2005. The proposed reply required for consideration of a petition to revive must be a Notice of Appeal (and appeal fee required by 37 CFR 41.20(b)(2), an amendment that *prima facie* places the application in condition for allowance, a Request for Continued Examination and submission (37 CFR 1.114), or the filing of a continuing application under 37 CFR 1.53(b). See MPEP 711.03(c)(III)(A)(2). No extensions of time pursuant to the provisions of 37 CFR 1.136(a) were obtained. Accordingly, the date of abandonment of this application is March 7, 2006.

The petition satisfies the requirements of 37 CFR 1.137(b) in that petitioner has supplied (1) the reply in the form of a Request for Continued Examination (RCE) and fee of $790, and the submission required by 37 CFR 1.114; (2) the petition fee of $1500; and (3) a proper statement of unintentional delay.

Telephone inquiries concerning this decision should be directed to the undersigned at (571) 272-3210.

This application is being referred to Technology Center AU 2614 for processing of the RCE and for appropriate action by the Examiner in the normal course of business on the amendment submitted in accordance with 37 CFR 1.114.

Irvin Dingle
Petition Examiner
Office of Petitions

UNITED STATES PATENT AND TRADEMARK OFFICE

Commissioner for Patents
United States Patent and Trademark Office
P.O. Box 1450
Alexandria, VA 22313-1450
www.uspto.gov

DILWORTH & BARRESE, LLP
333 EARLE OVINGTON BLVD.
SUITE 702
UNIONDALE NY 11553

COPY MAILED

JAN 2 2 2008

OFFICE OF PETITIONS

In re Application of
Seok-Hun Lim
Application No.: 10/858,258
Filed: June 1, 2004
Attorney Docket No: 1235-9 (SP2008)

: ON PETITION

This is in response to the petition under 37 CFR 1.137(b) filed August 30, 2007.

The petition is DISMISSED.

Any request for reconsideration of this decision must be submitted within TWO (2) MONTHS from the mail date of this decision. Extensions of time under 37 CFR 1.136(a) are permitted. The reconsideration request should include a cover letter entitled "Renewed Petition" under 37 CFR 1.137(b)."

This application became abandoned for failure to respond in a timely manner to the restriction/election requirement mailed February 8, 2006. The notice set a shortened period for reply of one month from its mailing date. Extensions of time were available pursuant to 37 CFR 1.136(a). A response was not received within the allowable period. The application became abandoned on March 9, 2006. A Notice of Abandonment was mailed on April 9, 2007.

Effective December 1, 1997, the provisions of 37 CFR 1.137(b) now provide that where the delay in reply was unintentional, a petition may be filed to revive an abandoned application or a lapsed patent pursuant to 37 CFR 1.137(b). A grantable petition pursuant to 37 CFR 1.137(b) must be accompanied by:

(1) the required reply, unless previously filed. In a non-provisional application abandoned for failure to prosecute, the required reply may be met by the filing of a continuing application. In an application or patent, abandoned or lapsed for failure to pay the issue fee, or any portion thereof, the required reply must be the payment of the issue fee or any outstanding balance thereof.

(2) the petition fee as set forth in 37 CFR 1.17(m);

(3) a statement that the entire delay in filing the required reply from the due date for the reply until the filing of a grantable petition pursuant to 37 CFR 1.137(b) was unintentional. The Commissioner may require additional information where there is a question whether the delay was unintentional; and

(4) any terminal disclaimer (and fee set forth in 37 CFR 1.20(d)) required pursuant to 37 CFR 1.137(c).

The instant petition does not satisfy the requirements of item (3) above.

As to Item (3), the *Manual of Paten Examining Procedure*, Section 7711.03(c) provides, in pertinent part, that:

> The Office does not generally question whether there has been an intentional or otherwise impermissible delay in filing an initial petition pursuant to 37 CFR 1.137(a) or (b), when such petition is filed: (A) within 3 months of the date the applicant is first notified that the application is abandoned; **and** (2) within 1 year of the date of abandonment of the application. Thus, an applicant seeking revival of an abandoned application is advised to file a petition pursuant to 37 CFR 1.137 within 3 months of the first notification that the application is abandoned to avoid the question of intentional delay being raised by the Office (or by third parties seeking to challenge any patent issuing from the application).
>
> Where a petition pursuant to 37 CFR 1.137(a) or (b) is not filed within 3 months of the date the applicant is first notified that the application is abandoned, the Office may consider there to be a question as to whether the delay was unavoidable or unintentional. In such instances,
>
> (A) the Office will require a showing as to how the delay between the date the applicant was first notified that the application was abandoned and the date a 37 CFR 1.137(a) petition was filed was "unavoidable"; or
>
> (B) the Office may require further information as to the cause of the delay between the date the applicant was first notified that the application was abandoned and the date a 37 CFR 1.137(b) petition was filed, and how such delay was "unintentional."
>
> To avoid delay in the consideration of the merits of a petition under 37 CFR 1.137(a) or (b) in instances in which such petition was not filed within 3 months of the date the applicant was first notified that the application was abandoned, applicants should include a showing as to how the delay between the date the applicant was first notified by the Office that the application was abandoned and the filing of a petition under 37 CFR 1.137 was (A) "unavoidable" in a petition under 37 CFR 1.137(a); or (B) "unintentional" in a petition under 37 CFR 1.137(b).

Petitioner did not provide not explanation for delay in filing the instant petition and how the delay was unintentional. Accordingly, the renewed petition must be accompanied by an explanation for said delay including, but not limited to, the considerations provided in MPEP § 711.03(c) cited above.

There is no indication that the person signing the instant petition was ever given a power of attorney or authorization of agent to prosecute the above-identified application. If the person signing the instant petition desires to receive future correspondence regarding this application, the appropriate power of attorney or authorization of agent must be submitted. While a courtesy copy of this decision is being mailed to the person signing the instant petition, all future correspondence will be directed to the address of currently of record until such time as appropriate instructions are received to the contrary.

Further correspondence with respect to this matter should be addressed as follows:

By mail:

Mail Stop Petitions
Commissioner for Patents
United States Patent and Trademark Office
Box 1450
Alexandria, VA 22313-1450

By facsimile: (571) 273-8300
Attn: Office of Petitions

Telephone inquiries concerning this decision may be directed to the undersigned at (571) 272-3222.

Kenya A. McLaughlin
Petitions Attorney
Office of Petitions

cc:
Paul J. Farrell
The Farrell Law Firm, PC
333 Earle Ovington Blvd., Suite 701
Uniondale, NY 11553

UNITED STATES PATENT AND TRADEMARK OFFICE

Commissioner for Patents
United States Patent and Trademark Office
P.O. Box 1450
Alexandria, VA 22313-1450
www.uspto.gov

DILWORTH & BARRESE, LLP
333 EARLE OVINGTON BLVD.
SUITE 702
UNIONDALE NY 11553

COPY MAILED

FEB 28 2008

In re Application of

Seok-Hun Lim :

Application No. 10/858,258

: DECISION ON PETITION

Filed: June 1, 2004

:

Attorney Docket No. 1235-9 (SP2008)

This is a decision on the renewed petition under 37 CFR 1.137(b), filed February 12, 2008, to revive the above-identified application.

The renewed petition is **GRANTED**.

The above-cited application became abandoned for failure to reply in a timely manner to the restriction/election requirement mailed February 8, 2006, which set a shortened period for reply of one month from its mailing date. A response was not received within the allowable period. The application became abandoned on March 9, 2006. A Notice of Abandonment was mailed on April 9, 2007. A petition under 37 CFR 1.137(b) was first filed August 30, 2007, and dismissed by decision mailed January 22, 2008.

The election filed February 12, 2008, is noted.

The application is being forwarded to Technology Center 2600, GAU 2617 for further processing.

Telephone inquiries concerning this decision should be directed to the undersigned at (571) 272-3222.

Kenya A. McLaughlin
Petitions Attorney
Office of Petitions

UNITED STATES PATENT AND TRADEMARK OFFICE

Commissioner for Patents
United States Patent and Trademark Office
P.O. Box 1450
Alexandria, VA 22313-1450
www.uspto.gov

HOFFMANN & BARON, LLP
6900 JERICHO TURNPIKE
SYOSSET, NY 11791

COPY MAILED

DEC 2 1 2007

OFFICE OF PETITIONS

In re Application of
Adam Merzon
Application No. 10/858,280
Filed: June 1, 2004
Attorney Docket No. 1074.002 (1668-5 CIP)

DECISION ON PETITION
TO WITHDRAW
FROM RECORD

This is a decision on the Request to Withdraw as attorney or agent of record under 37 C.F.R. § 1.36(b) filed August 1, 2007.

The request is **DISMISSED** as moot.

A review of the file record indicates that the power of attorney to Hoffmann & Baron, LLP has been revoked by the applicant of the patent application on August 6, 2007. Accordingly, the request to withdraw under 37 C.F.R. § 1.36(b) is moot.

All future communications from the Office will continue to be directed to the below-listed address until otherwise notified by applicant.

Telephone inquires concerning this decision should be directed to undersigned at 571-272-1642.

April M. Wise
Petitions Examiner
Office of Petitions

cc: BEAUX MERZON, INC. – CASELT
1050 VALLEY BROOK AVENUE
LYNDHURST, NJ 07071

UNITED STATES PATENT AND TRADEMARK OFFICE

UNITED STATES DEPARTMENT OF COMMERCE
United States Patent and Trademark Office
Address: COMMISSIONER FOR PATENTS
P.O. Box 1450
Alexandria, Virginia 22313-1450
www.uspto.gov

THE FARRELL LAW FIRM, LLP
290 Broadhollow Road
Suite 210E
Melville, NY 11747

Mail Date: 04/21/2010

Applicant	: Joung-Kyou Park	: DECISION ON REQUEST FOR
Patent Number	: 7606600	: RECALCULATION of PATENT
Issue Date	: 10/20/2009	: TERM ADJUSTMENT IN VIEW
Appliction No	: 10/858,302	: OF WYETH AND NOTICE OF INTENT TO
Filed	: 06/01/2004	: ISSUE CERTIFICATE OF CORRECTION
		:

The Request for Recalculation is **GRANTED** to the extent indicated.

The patent term adjustment has been determined to be **1165** days. The USPTO will *sua sponte* issue a certificate of correction reflecting the amount of PTA days determined by the recalculation.

Prior to the issuance of the certificate of correction, the USPTO will afford patentee an opportunity to be heard and request reconsideration. Accordingly, patentee has **one month or thirty (30) days**, whichever is longer, to file a request for reconsideration of this patent term adjustment calculation. See 35 U.S.C. 154(b)(3)(B)(ii) and 37 CFR 1.322(a)(4). No extensions of time will be granted under 37 CFR 1.136.

Patentee should use document code PET.OP if electronically filing a request for reconsideration of this patent term adjustment calculation. The patentee must also include the information required by 37 CFR 1.705(b)(2) and the fee required by 37 CFR 1.18(e). If patentee does not file a timely request for reconsideration of this patent term adjustment calculation including the information required by 37 CFR 1.705(b)(2) and the fee required by 37 CFR 1.18(e), the USPTO will issue a certificate of correction reflecting the PTA determination noted above.

Patentee should be aware that in order to preserve the right to review in the United States District Court for the District of Columbia of the USPTO patent term adjustment determination, patentee must ensure that he or she also take the steps required under 35 U.S.C. 154(b)(4)(A) in a timely manner. Nothing in the request for recalculation should be construed as providing an alternative time frame for commencing a civil action under 35 U.S.C. 154(b)(4)(A).

Any questions concerning this decision should be directed to the Office of Patent Legal Administration at 571-272-7702.

UNITED STATES PATENT AND TRADEMARK OFFICE

Commissioner for Patents
United States Patent and Trademark Office
P.O. Box 1450
Alexandria, VA 22313-1450
www.uspto.gov

AKERMAN SENTERFITT
P.O. BOX 3188
WEST PALM BEACH, FL 33402-3188

COPY MAILED

OCT 1 0 2006

OFFICE OF PETITIONS

In re Application of Pajunk et al. :
Application No. 10/858,308 :
Filing Date: June 1, 2004 :
Attorney Docket No. 2368-155 :

Decision on Petition

This is a decision on the petition under 37 CFR 1.181 to withdraw the holding of abandonment, or in the alternative, under 37 CFR 1.137(b) to revive the application.

The petition under 37 CFR 1.181 is **granted**.

The petition under 37 CFR 1.137(a) is **dismissed as moot**.

A non-final Office action was mailed June 30, 2005. A reply was not filed in response to the Office Action. As a result, the application was deemed abandoned. A Notice of Abandonment was mailed January 9, 2006.

The petition establishes the non-final Office action was mailed to an incorrect Office as a result of PTO error.

The non-final Office action mailed June 30, 2005, is vacated.

The Notice of Abandonment is vacated and the holding of abandonment withdrawn.

Since the petition has been granted under 37 CFR 1.181, petitioner's request to have the petition considered under 37 CFR 1.137(b) is dismissed as moot. No petition fee is required for a petition to withdraw holding of abandonment under 37 CFR 1.181. Therefore, a petition fee has not been charged to petitioner's deposit account.

Technology Center Art Unit 3763 will be informed of the instant decision and the amendment filed July 4, 2006, will be entered and considered by the examiner in due course.

Telephone inquiries regarding this communication should be directed to Petitions Attorney Steven Brantley at (571) 272-3203.

Charles Steven Brantley
Senior Petitions Attorney
Office of Petitions

UNITED STATES PATENT AND TRADEMARK OFFICE

COMMISSIONER FOR PATENTS
UNITED STATES PATENT AND TRADEMARK OFFICE
P.O. BOX 1450
ALEXANDRIA, VA 22313-1450
www.uspto.gov

Paper No.

BRINKS HOFER GILSON & LIONE
P.O. BOX 10395
CHICAGO IL 60610

COPY MAILED
SEP 26 2008

In re Patent No. 7,346,978	:	
Kiyoshi Sato	:	DECISION ON REQUEST
Issue Date: March 25, 2008	:	FOR
Application No. 10/858,310	:	RECONSIDERATION OF
Filed: June 1, 2004	:	PATENT TERM ADJUSTMENT
Attorney Docket No. 13650-5	:	

This is a decision on the "REQUEST FOR RECONSIDERATION OF PATENT TERM ADJUSTMENT," filed May 27, 2008. Patentees assert that the patent term adjustment indicated on the patent should be corrected from five hundred forty-eight (548) days to eight hundred forty-six (846) days

The request for reconsideration of the patent term adjustment under § 1.705(d) is **DISMISSED**.

Patentees are given **TWO (2) MONTHS** from the mail date of this decision to respond. No extensions of time will be granted under § 1.136.

On March 25, 2008, the above-identified application matured into U.S. Patent No. 7,346,978, with a revised Patent Term Adjustment of 548 days. The instant request for reconsideration filed Tuesday, May 27, 2008[1] was timely filed within 2 months of the date the patent issued. See § 1.705(d). Patentees assert that an additional period of adjustment of 298 days should have been entered for the Office taking in excess of three years to issue the patent.

With respect to §1.703(b), it is noted that the patent issued three years and 298 days after its filing date. However, the

[1] The request is timely filed as Sunday, May 25, 2008 was a weekend day, and Monday, May 26, 2008 was a federal holiday. See 37 CFR 1.7(a).

period for over 3 year pendency does not overlap only to the extent that the actual dates in the period beginning three years after the date on which the application was filed overlap with the actual dates in the periods for failure of the Office to take action within specified time frames. In other words, consideration of the overlap does not begin three years after the filing date of the application.

Any days of delay for Office issuance of the patent more than 3 years after the filing date of the application, which overlap, with the days of patent term adjustment accorded prior to the issuance of the patent will not result in any additional patent term adjustment. Further, in considering the overlap, the entire period during which the application was pending (except for periods excluded under 35 U.S.C. 154(b)(1)(B)(i)-(iii), and not just the period beginning three years after the actual filing date of the application, is the period of delay under 35 U.S.C. 154(b)(1)(B) in determining whether periods of delay overlap under 35 U.S.C. 154(b)(2)(A). See 35 U.S.C. 154(b)(1)(B); 35 U.S.C. 154(b)(2)(A); and 37 CFR 1.703(f). In this instance, it was properly concluded that the 554 days accorded pursuant to 1.702(a)(1) for Office delay during the pendency of the application overlapped with the 298 days pursuant to 1.703(b). Thus, no additional periods of adjustment was entered for Office delay in issuing the patent.

In view thereof, the patent term adjustment of 548 days indicated in the patent is correct.

The Office acknowledges submission of the $200.00 fee set forth in 37 CFR 1.18(e). No additional fees are required.

Telephone inquiries specific to this matter should be directed to the undersigned at (571) 272-3219.

Nancy Johnson
Senior Petitions Attorney
Office of Petitions

UNITED STATES PATENT AND TRADEMARK OFFICE

Commissioner for Patents
United States Patent and Trademark Office
P.O. Box 1450
Alexandria, VA 22313-1450
www.uspto.gov

COPY MAILED

JUN 28 2005

OFFICE OF PETITIONS

CARPENTER & KULAS, LLP
1900 EMBARCADERO ROAD
SUITE 109
PALO ALTO, CA 94303

In re Application of :
Hessam Ahani :
Application No. 10/858,329 : ON PETITION
Filed: June 1, 2004 :
Attorney Docket No. 010027-000120US :

This is a decision on the petition under 37 CFR 1.137(b), filed April 6, 2005, to revive the above-identified application.

The petition is **GRANTED**.

The application became abandoned for failure to timely respond to a Notice to File Corrected Application Papers mailed July 8, 2004, requiring replacement drawings in compliance with 37 CFR 1.84 and 37 CFR 1.121. A Notice of Abandonment was mailed March 22, 2005. In response, on April 6, 2005, the present petition was filed, along with replacement drawings.

The application is being referred to the Office of Initial Patent Examination (OIPE) for review of the drawings provided April 6, 2005.

Telephone inquires related to this decision should be directed to the undersigned at (571) 272-3204. Telephone inquiries related to OIPE processing should be directed to their hotline at (703) 308-1202.

Sherry D. Brinkley
Petitions Examiner
Office of Petitions
Office of the Deputy Commissioner
for Patent Examination Policy

UNITED STATES PATENT AND TRADEMARK OFFICE

Commissioner for Patents
United States Patent and Trademark Office
P.O. Box 1450
Alexandria, VA 22313-1450
www.uspto.gov

TRELLIS INETLLECTUAL PROPERTY LAW GROUP, P.C
1900 EMBARCADERO ROAD
SUITE 109
PALO ALTO CA 94303

COPY MAILED

AUG 08 2006

OFFICE OF PETITIONS

In re Application of	:	
Ahani	:	
Application No. 10/858,329	:	DECISION ON PETITION
Filed: June 1, 2004	:	TO WITHDRAW
Attorney Docket No. 010027-000120US	:	FROM RECORD
	:	

This is a decision on the Request to Withdraw as attorney or agent of record under 37 C.F.R. § 1.36(b), filed January 30, 2006.

The request is **NOT APPROVED**.

A grantable request to withdraw as attorney/agent of record must be signed by every attorney/agent seeking to withdraw or contain a clear indication that one attorney is signing on behalf of another/others. A request to withdraw will not be approved unless at least 30 (thirty) days would remain between the date of approval and the later of the expiration date of a time to file a response or the expiration date of the maximum time period which can be extended under 37 C.F.R. § 1.136(a).

The request cannot be approved because no reasons for withdrawal have been provided. The Office cannot, at this time, determine whether practitioner's request is one of the mandatory or permissive reasons enumerated in 37 CFR 10.40. Any subsequent requests must include reasons for withdrawal. Please note that there is a space provided for on PTO/SB/83 (Request to Withdraw as Attorney or Agent) to supply practitioner's reasons.

All future communications from the Office will continue to be directed to the above-listed address until otherwise notified by applicant.

Telephone inquiries concerning this decision should be directed to April Wise at 571-272-1642.

Ainella Au
Petitions Examiner
Office of Petitions

cc: John W. Carpenter
155 Sansome Street
Suite 400
San Francisco, CA 94104-3614

UNITED STATES PATENT AND TRADEMARK OFFICE

Commissioner for Patents
United States Patent and Trademark Office
P.O. Box 1450
Alexandria, VA 22313-1450
www.uspto.gov

LATHROP & GAGE LC
4845 PEARL EAST CIRCLE
SUITE 300
BOULDER CO 80301

COPY MAILED

JUN 11 2008

OFFICE OF PETITIONS

In re Patent No. 7,088,419	:	
Issue Date: August 8, 2006	:	
Application No. 10/858,337	:	NOTICE
Filed: June 1, 2004	:	
Attorney Docket No. 420032	:	

This is a notice regarding your request for acceptance of a fee deficiency submission under 37 CFR 1.28. On September 1, 1998, the Court of Appeals for the Federal Circuit held that 37 CFR 1.28(c) is the sole provision governing the time for correction of the erroneous payment of the issue fee as a small entity. **See DH Technology v. Synergystex International, Inc. 154 F.3d 1333, 47 USPQ2d 1865 (Fed. Cir. Sept. 1, 1998).**

The Office no longer investigates or rejects original or reissue applications under 37 CFR 1.56. **1098 Off. Gaz. Pat. Office 502 (January 3, 1989)**. Therefore, nothing in this Notice is intended to imply that an investigation was done.

Your fee deficiency submission under 37 CFR 1.28 is hereby **ACCEPTED**.

This patent is no longer entitled to small entity status. Accordingly, all future fees paid in this patent must be paid at the large entity rate.

Liana Walsh
Petitions Examiner
Office of Petitions

UNITED STATES PATENT AND TRADEMARK OFFICE

COMMISSIONER FOR PATENTS
UNITED STATES PATENT AND TRADEMARK OFFICE
P.O. BOX 1450
ALEXANDRIA, VA 22313-1450
www.uspto.gov

JJGJR.: 03-05

Paper No: __

MEDLEN & CARROLL, LLP
101 HOWARD STREET, SUITE 350
SAN FRANCISCO CA 94105

COPY MAILED

MAR 2 4 2005

OFFICE OF PETITIONS

In re Application of	:	
Sheikhnejad, et al.	:	
Application No. 10/858,341	:	ON PETITION
Filed: 1 June, 2004	:	
Attorney Docket No. ProNAi-09053	:	

This is a decision on the petition under ¶(a) of 37 C.F.R. §1.47, filed on 31 January, 2005.

The petition is **DISMISSED**.

NOTES:

(1) Any reply must include a renewed petition (and fee) must include a petition under 37 C.F.R. §1.47 and must be submitted within two (2) months from the mail date of this decision. Extensions of time under 37 C.F.R. §1.136(a) are permitted. The reconsideration request should include a cover letter entitled "Petition under 37 C.F.R. §1.47";

(2) Thereafter, there will be no further reconsideration of this matter.

BACKGROUND

The record indicates:

- the instant application was filed on 1 June, 2004, without, *inter alia*, a fully executed

oath/declaration;

- on 29 July, 2004, the Office mailed a Notice of Missing Parts indicating, inter alia, that a fully executed oath/declaration was required within two months;

- on 31January, 2005, Petitioner Tanya A. Arenson (Reg. No. 47,391) filed the instant petition (with request and fee for extension of time), along with an oath/declaration containing the signatures of named co-inventors Ms. Sooch, Mr. Goodwin and Mr. Olson, but without the signature of named co-inventor Reza Sheikhnejad (Mr. Sheikhnejad), a narration regarding disagreements between the non-signing inventor Mr. Sheikhnejad and the Assignee, and an averment that the entire application was presented to Mr. Sheikhnejad–however, the documents provided speak only to the oath/declaration and the assignment, and make no mention of the entire application (description, claims, abstract, drawings) having been presented to the non-signing inventor Mr. Sheikhnejad .

ANALYSIS

The regulations at 37 C.F.R. §1.47 provide in pertinent part:

§ 1.47 Filing when an inventor refuses to sign or cannot be reached.
(a) If a joint inventor refuses to join in an application for patent or cannot be found or reached after diligent effort, the application may be made by the other inventor on behalf of himself or herself and the nonsigning inventor. The oath or declaration in such an application must be accompanied by a petition including proof of the pertinent facts, the fee set forth in § 1.17(h), and the last known address of the nonsigning inventor. The nonsigning inventor may subsequently join in the application by filing an oath or declaration complying with §1.63.

* * *

The regulations at 37 C.F.R. §1.63 provide in pertinent part:

§1.63 Oath or declaration.

(b) In addition to meeting the requirements of paragraph (a)of this section, the oath or declaration must also:

(1)Identify the application to which it is directed;

(2) State that the person making the oath or declaration has reviewed and understands the contents of the application, Including the claims, as amended by any amendment specifically referred to in the oath or declaration; and

(3) State that the person making the oath or declaration acknowledges the duty to disclose to the Office all information known to the person to be material to patentability as defined in § 1.56.

When one alleges a refusal of the inventor to sign the application papers, the circumstances of the presentation of the application papers and of the refusal must be specified in a statement of facts by the person who, *inter alia*, presented the inventor with the application papers and/or to whom the refusal was made.

The commentary at MPEP §409.03(d) provides:

409.03(d) Proof of Unavailability or Refusal

INVENTOR CANNOT BE REACHED

Where inability to find or reach a nonsigning inventor "after diligent effort" is the reason for filing under 37 C.F.R. §1.47, a statement of facts should be submitted that fully describes the exact facts which are relied on to establish that a diligent effort was made.

The fact that a nonsigning inventor is on vacation or out of town and is therefore temporarily unavailable to sign the declaration is not an acceptable reason for filing under 37 C.F.R. §1.47.

Furthermore, the fact that an inventor is hospitalized and/or is not conscious is not an acceptable reason for filing under 37 C.F.R. §1.47. 37 C.F.R. §1.43 may be available under these circumstances. See MPEP §409.02. Such a petition under 37 C.F.R. §1.47 will be dismissed as inappropriate.

The statement of facts must be signed, where at all possible, by a person having firsthand knowledge of the facts recited therein. Statements based on hearsay will not normally be accepted. Copies of documentary evidence such as internet searches, certified mail return receipts, cover letters of instructions, telegrams, that support a finding that the nonsigning inventor could not be found or reached should be made part of the statement. The steps taken to locate the whereabouts of the nonsigning inventor should be included statement of facts. It is important that the statement contain facts as opposed to conclusions.

REFUSAL TO JOIN

A refusal by an inventor to sign an oath or declaration when the inventor has not been presented with the application papers does not itself suggest that the inventor is refusing to join the application unless it is clear that the inventor understands exactly what he or she is being asked to sign and refuses to accept the application papers. A copy of the

application papers should be sent to the last known address of the nonsigning inventor, or, if the nonsigning inventor is represented by counsel, to the address of the nonsigning inventor's attorney. The fact that an application may contain proprietary information does not relieve the 37 C.F.R. §1.47 applicant of the responsibility to present the application papers to the inventor if the inventor is willing to receive the papers in order to sign the oath or declaration. It is noted that the inventor may obtain a complete copy of the application, unless the inventor has assigned his or her interest in the application, and the assignee has requested that the inventor not be permitted access. See MPEP §106. It is reasonable to require that the inventor be presented with the application papers before a petition under 37 C.F.R. §1.47 is granted since such a procedure ensures that the inventor is apprised of the application to which the oath or declaration is directed. In re Gray, 115 USPQ 80 (Comm'r Pat. 1956).

Where a refusal of the inventor to sign the application papers is alleged, the circumstances of the presentation of the application papers and of the refusal must be specified in a statement of facts by the person who presented the inventor with the application papers and/or to whom the refusal was made. Statements by a party not present when an oral refusal is made will not be accepted.

Proof that a bona fide attempt was made to present a copy of the application papers (specification, including claims, drawings, and oath or declaration) to the nonsigning inventor for signature, but the inventor refused to accept delivery of the papers or expressly stated that the application papers should not be sent, may be sufficient.

When there is an express oral refusal, that fact along with the time and place of the refusal must be stated in the statement of facts. When there is an express written refusal, a copy of the document evidencing that refusal must be made part of the statement of facts. The document may be redacted to remove material not related to the inventor's reasons for refusal.

When it is concluded by the 37 C.F.R. §1.47 applicant that a nonsigning inventor's conduct constitutes a refusal, all facts upon which that conclusion is based should be stated in the statement of facts in support of the petition or directly in the petition. If there is documentary evidence to support facts alleged in the petition or in any statement of facts, such evidence should be submitted. Whenever a nonsigning inventor gives a reason for refusing to sign the application oath or declaration, that reason should be stated in the petition.

Thus, not only <u>must a copy of the entire application must be sent to the last known address of the non-signing inventor</u> (or the estate representative) with a request that he/she sign the declaration for the patent application–<u>and evidence of that transmittal submitted</u>–but also a reasonable effort must be made to ascertain a current or last known address, and the petition (with fee) must state

over the signature and registration number of the Petitioner the last known address and, if appropriate, evidence of the due diligence effort ascertaining same.

Alternatively, an oath or declaration for the patent application in compliance with 37 C.F.R. §§1.63 and 1.64 must be presented.

(The declaration must set forth the inventor's residence, citizenship and post office address. An oath or declaration in compliance with 37 C.F.R. §§1.63 and 1.64 signed by the Rule 1.47 applicant is required.[1])

CONCLUSION

The record as it stands appears to be in conflict as to whether the entire application was presented to Mr. Sheikhnejad. A copy of the transmittal letter setting forth the contents transmitted does not appear to have been part of the documentation supporting the instant petition. In this case, a copy of the transmittal letter evidencing that the entire application (description, claims, abstract and drawings) should be submitted with any renewed petition.

Therefore, the instant petition hereby is **dismissed**.

Further correspondence with respect to this matter should be addressed as follows:

By mail: Commissioner for Patents[2]
P.O. Box 1450
Alexandria, VA 22313-1450

By FAX: (703) 872-9306 (IFW Formal Filings)
ATTN.: Office of Petitions

By hand: Mail Stop: Petition
Customer Service Window
Randolph Building
401 Dulany Street
Alexandria, VA 22314

---

[1] See: MPEP 409.03(b).

[2] To determine the appropriate addresses for other subject-specific correspondence, refer to the USPTO Web site at www.uspto.gov.

Telephone inquiries regarding this decision should be directed to the undersigned at (571) 272-3214.

John J. Gillon, Jr.
Senior Attorney
Office of Petitions

UNITED STATES PATENT AND TRADEMARK OFFICE

Commissioner for Patents
United States Patent and Trademark Office
P.O. Box 1450
Alexandria, VA 22313-1450
www.uspto.gov

JJGJR.: 08-05

Paper No: __

MEDLEN & CARROLL, LLP
101 HOWARD STREET, SUITE 350
SAN FRANCISCO CA 94105

COPY MAILED

AUG 0 3 2005

OFFICE OF PETITIONS

In re Application of :
Sheikhnejad, et al. :
Application No. 10/858,341 : ON PETITION
Filed: 1 June, 2004 :
Attorney Docket No. ProNAi-09053 :

This is a decision on the renewed petition under ¶(a) of 37 C.F.R. §1.47, filed on 31 May, 2005.

The petition is **GRANTED**.

BACKGROUND

The record indicates:

- the instant application was filed on 1 June, 2004, without, *inter alia*, a fully executed oath/declaration;
- on 29 July, 2004, the Office mailed a Notice of Missing Parts indicating, inter alia, that a fully executed oath/declaration was required within two months;
- on 31January, 2005, Petitioner Tanya A. Arenson (Reg. No. 47,391) filed the original petition (with request and fee for extension of time), along with an oath/declaration containing the signatures of named co-inventors Ms. Sooch, Mr. Goodwin and Mr. Olson, but without the signature of named co-inventor Reza Sheikhnejad (Mr. Sheikhnejad), a narration regarding

disagreements between the non-signing inventor Mr. Sheikhnejad and the Assignee, and an averment that the entire application was presented to Mr. Sheikhnejad–however, the petition was dismissed on 24 March, 2005, because the documents provided spoke only to the oath/declaration and the assignment, and make no mention of the entire application (description, claims, abstract, drawings) having been presented to the non-signing inventor Mr. Sheikhnejad;

- the instant petition corrects this defect and sets forth what is averred to be a current and valid mailing address.

Lastly, Petitioner has submitted a declaration in compliance with 37 C.F.R. §1.63 and §1.64 and Petitioner has shown that such action is necessary to prevent irreparable damage.

This application and papers have been reviewed and found in compliance with 37 C.F.R. §1.47(b).

This application hereby is **ACCORDED status under 37 C.F.R. §1.47(b)**.

As provided under 37 C.F.R. §1.47(b), the Office will forward notice of this application's filing to the non-signing inventor at the address given in the petition.

Notice of the filing of this application also will be published in the Official Gazette.

This file is released to OIPE for processing as necessary to reflect the instant decision before being released for examination in due course.

Telephone inquiries concerning this decision may be directed to the undersigned at (571) 272-3214.

John J. Gillon, Jr.
Senior Attorney
Office of Petitions

SPE RESPONSE FOR CERTIFICATE OF CORRECTION

Paper No.: _____

DATE : 10/21/07

TO SPE OF : ART UNIT 1624

SUBJECT : Request for Certificate of Correction for Appl. No.: **10/858343** Patent No.: **7060827**

Please respond to this request for a certificate of correction within 7 days.

Please review the requested changes/corrections as shown in the **COCIN** document(s) in the IFW application image. No new matter should be introduced, nor should the scope or meaning of the claims be changed.

Please complete the response (see below) and forward the completed response to scanning using document code **COCX**.

Angela Green
Certificates of Correction Branch
703.308.9380 ext. 123

Thank You For Your Assistance

The request for issuing the above-identified correction(s) is hereby:
Note your decision on the appropriate box.

- ☒ **Approved** — All changes apply.
- ☐ **Approved in Part** — Specify below which changes **do not** apply.
- ☐ **Denied** — State the reasons for denial below.

Comments: _____

_____

_____

_____

_____

Yvonne Eyler — **SPE**

1621 — **Art Unit**

UNITED STATES PATENT AND TRADEMARK OFFICE

Commissioner for Patents
United States Patent and Trademark Office
P.O. Box 1450
Alexandria, VA 22313-1450
www.uspto.gov

HARDING, EARLEY, FOLLMER & FRAILEY
86 THE COMMONS AT VALLEY FORGE
1288 VALLEY FORGE ROAD,
P.O. BOX 750
VALLEY FORGE PA 19482-0750

COPY MAILED

JAN 31 2008

OFFICE OF PETITIONS

In re Application of	:	
Angus Bryden MacDonald	:	
Application No. 10/858,346	:	DECISION GRANTING PETITION
Filed: June 2, 2004	:	UNDER 37 CFR 1.137(b)
For: **BATTERY CABLE CLAMP**	:	

This is a decision on the petition under 37 CFR 1.137(b), filed July 30, 2007, to revive the above-identified application.

The petition is **GRANTED**.

The petition satisfies the conditions for revival pursuant to the provisions of 37 CFR 1.137(b) in that (1) the reply in the form of the issue, publication fees and drawings; (2) the petition fee; and (3) the required statement of unintentional delay have been received. Accordingly, the reply to the Notice of Allowance/Notice of Allowability of June 15, 2005, is accepted as having been unintentionally delayed.

Telephone inquiries concerning this decision should be directed to the undersigned at (571) 272-3208.

This matter is being referred to Patent Publication.

Karen Creasy

Karen Creasy
Petitions Examiner
Office of Petitions

UNITED STATES PATENT AND TRADEMARK OFFICE

Commissioner for Patents
United States Patent and Trademark Office
P.O. Box 1450
Alexandria, VA 22313-1450
www.uspto.gov

JUL 28 2005

In re Application of Shahin Enayati et al. Serial No. 10/858,349 Filed: June 1, 2004 For: ENCLOSURE FOR REFUSE AND RECYCLABLE CONTAINERS	:	DECISION ON PETITION TO MAKE SPECIAL

Applicant's petition, filed June 1, 2004, seeks to have this application made special based upon the Energy Conservation Program.

The petition is GRANTED.

The petition has been reviewed and is found to be in compliance with the requirements for special status as set forth in Section 708.02(VI) of the Manual of Patent Examining Procedure (MPEP).

PETITION GRANTED.

Richard A. Bertsch, Director
Technology Center 3700

Procopio, Cory, Hargreaves & Savitch
530 B Street, Suite 2100
San Diego, CA 92101-4469

UNITED STATES PATENT AND TRADEMARK OFFICE

Commissioner for Patents
United States Patent and Trademark Office
P.O. Box 1450
Alexandria, VA 22313-1450
www.uspto.gov

Paper No.

MORRISS O'BRYANT COMPAGNI, P.C.
136 SOUTH MAIN STREET
SUITE 700
SALT LAKE CITY, UT 84101

COPY MAILED

DEC 27 2004

OFFICE OF PETITIONS

In re Application of :
David Borrowman and Brandon Doering:
Application No. 10/858,350 : DECISION ACCORDING STATUS
Filed: June 1, 2004 : UNDER 37 CFR 1.47(a)
Attorney Docket No. 2669.EPSI.NP :
Title: COMPONENT ASSEMBLY FOR :
RECONFIGURING A CENTRIFUGAL PUMP :

This is a decision on the "PETITION UNDER 37 C.F.R. § 1.47(a) WITH STATEMENT OF FACTS IN SUPPORT THEREOF," filed Monday, September 27, 2004.

The petition is **GRANTED**.

The above-identified application was filed on June 1, 2004, without an executed oath or declaration. Accordingly, on July 26, 2004, a "Notice to File Missing Parts of Nonprovisional Application" was mailed, requiring an executed oath or declaration and a surcharge for its late filing. (In addition, the Notice required replacement drawings in compliance with 37 CFR 1.84 and 37 CFR 1.121).

In response, rule 47 applicant filed the instant petition (and fee); the late surcharge; and a declaration executed by inventor David Borrowman on behalf of himself and on behalf of non-signing joint inventor Brandon Doering. Rule 47 applicant maintains that status under 37 CFR 1.47 is proper because joint inventor Doering has refused to sign the Declaration after having been provided a copy of the filed non-provisional application.

The petition includes a Statement signed by inventor Doering acknowledging receipt of a copy of the application and stating that "I decline to execute the Declaration as an inventor." The petition also includes the last known address of inventor Doering.

The declaration filed September 27, 2004, and the petition have been reviewed and found in compliance with 37 CFR 1.47(a).

This application is hereby accorded Rule 1.47(a) status.

As provided in new Rule 1.47(c), this Office will forward notice of this application's filing to the non-signing inventor at the address given in the petition. Notice of the filing of this application will also be published in the Official Gazette.

The Office of Initial Patent Examination (OIPE) has been advised of this decision. The application has, thereby, been forwarded to OIPE for completion of pre-examination processing.

Telephone inquiries regarding this decision should be directed to the undersigned at (571) 272-3219.

Nancy Johnson
Senior Petitions Attorney
Office of Petitions

UNITED STATES PATENT AND TRADEMARK OFFICE

Commissioner for Patents
United States Patent and Trademark Office
P.O. Box 1450
Alexandria, VA 22313-1450
www.uspto.gov

Mr. Brandon Doering
3862 Bingham Creed Road
West Jordan, UT 84088

COPY MAILED

DEC 27 2004

OFFICE OF PETITIONS

In re Application of :
David Borrowman and Brandon Doering:
Application No. 10/858,350 : LETTER
Filed: June 1, 2004 :
Attorney Docket No. 2669.EPSI.NP :
Title: COMPONENT ASSEMBLY FOR :
RECONFIGURING A CENTRIFUGAL PUMP :

Dear Mr. Doering:

You are named as a joint inventor in the above-identified United States patent application filed under the provisions of 35 U.S.C. 116 (United States Code) and 37 CFR 1.47(a), Rules of Practice in Patent Cases. Should a patent be granted on the application you will be designated therein as a joint inventor.

As a named inventor you are entitled to inspect any paper in the file wrapper of the application, order copies of all or any part thereof (at a prepaid cost per 37 CFR 1.19) or make your position of record in the application. Alternatively, you may arrange to do any of the preceding through a registered patent attorney or agent presenting written authorization from you. If you care to join the application, counsel of record (see below) would presumably assist you. Joining in the application would entail the filing of an appropriate oath or declaration by you pursuant to 37 CFR 1.63. However, no action on your part is required for this patent to issue with you as a named inventor.

Telephone inquiries regarding this communication should be directed to Petitions Attorney Nancy Johnson at (571) 272-3219. Requests for information regarding your application should be directed to the File Information Unit at (703) 308-2733. Information regarding how to pay for and order a copy of the application, or a specific paper in the application, should be directed to the Certification Division at (703) 308-9726 or 1-800-972-6382 (outside the Washington D.C. area).

Nancy Johnson

Nancy Johnson
Senior Petitions Attorney
Office of Petitions

MORRISS O'BRYANT COMPAGNI, P.C.
136 SOUTH MAIN STREET
SUITE 700
SALT LAKE CITY, UT 84101

UNITED STATES PATENT AND TRADEMARK OFFICE

Commissioner for Patents
United States Patent and Trademark Office
P.O. Box 1450
Alexandria, VA 22313-1450
www.uspto.gov

DICKINSON WRIGHT PLLC
38525 WOODWARD AVENUE
SUITE 2000
BLOOMFIELD HILLS MI 48304-2970

COPY MAILED

NOV 23 2007

OFFICE OF PETITIONS

In re Application of	:	
Charles A. Taylor, II, et al	:	
Application No. 10/858,358	:	DECISION ON PETITION
Filed: June 1, 2004	:	
Attorney Docket No. 29756-3	:	

This is a decision on the petition under 37 CFR 1.137(b), filed May 16, 2007, to revive the above-identified application.

The petition is **GRANTED**.

The application became abandoned for failure to reply in a timely manner to the non-final Office action mailed August 23, 2006, which set a shortened statutory period for reply of three (3) months. No extensions of time were obtained under the provisions of 37 CFR 1.136(a). Accordingly, the application became abandoned on November 25, 2006 (November 23, 2006, the due date, is a Federal holiday). A Notice of Abandonment was mailed on March 28, 2007.

The petition satisfies the requirements of 37 CFR 1.137(b) in that petitioner has supplied (1) the reply in the form of an amendment (with drawings), (2) the petition fee of $750, and (3) a proper statement of unintentional delay. Accordingly, the reply to the Office action of August 23, 2006 is accepted as being unintentionally delayed.

It is not apparent whether the person signing the statement of unintentional delay was in a position to have firsthand or direct knowledge of the facts and circumstances of the delay at issue. Nevertheless, such statement is being treated as having been made as the result of a reasonable inquiry into the facts and circumstances of such delay. See 37 CFR 10.18(b) and Changes to Patent Practice and Procedure; Final Rule Notice, 62 Fed. Reg. 53131, 53178 (October 10, 1997), 1203 Off. Gaz. Pat. Office 63, 103 (October 21, 1997). In the event that such an inquiry has not been made, petitioner must make such an inquiry. If such

inquiry results in the discovery that it is not correct that the entire delay in filing the required reply from the due date for the reply until the filing of a grantable petition pursuant to 37 CFR 1.137(b) was unintentional, petitioner must notify the Office.

Telephone inquiries concerning this decision should be directed to the undersigned at (571) 272-3218.

This application is being referred to Technology Center AU 2877 for appropriate action in the normal course of business on the reply received May 16, 2007.

Frances Hicks
Petitions Examiner
Office of Petitions

UNITED STATES PATENT AND TRADEMARK OFFICE

Commissioner for Patents
United States Patent and Trademark Office
P.O. Box 1450
Alexandria, VA 22313-1450
www.uspto.gov

NATH & ASSOCIATES
1030 15TH STREET, NW
6TH FLOOR
WASHINGTON, DC 20005

COPY MAILED
MAR 14 2006
OFFICE OF PETITIONS

In re Application of	:
Gabriel Cabelli	:
Application No. 10/858,371	: DECISION ON PETITION
Filed: June 2, 2004	: UNDER 37 CFR 1.78(a)(3)
Attorney Docket No. 82574	:

This is a decision on the petition under 37 CFR 1.78(a)(3), filed November 3, 2005, which is being treated under 37 CFR 1.78(a)(3) and 37 CFR 1.78(a)(6), to accept an unintentionally delayed claim under 35 U.S.C. §§ 120, 365(c) and 119(e) for the benefit of priority to the prior-filed PCT and provisional applications as set forth in the concurrently filed amendment.

The petition is **GRANTED**.

A petition for acceptance of a claim for late priority under 37 CFR 1.78(a)(3) and 1.78(a)(6) is only applicable to those applications filed on or after November 29, 2000. Further, the petition is appropriate only after the expiration of the period specified in 37 CFR 1.78(a)(2)(ii) and 1.78(a)(5)(ii). In addition, the petition under 37 CFR §§ 1.78(a)(3) and 1.78(a)(6) must be accompanied by:

(1) the reference required by 35 U.S.C. §§ 120 and 119(e) and 37 CFR 1.78(a)(2)(i) and 1.78(a)(5)(i) of the prior-filed application, unless previously submitted;
(2) the surcharge set forth in § 1.17(t); and
(3) a statement that the entire delay between the date the claim was due under 37 CFR 1.78(a)(2)(ii) and 1.78(a)(5)(ii) and the date the claim was filed was unintentional. The Director may require additional where there is a question whether the delay was unintentional.

The instant nonprovisional application was filed after November 29, 2000, and the claim herein for the benefit of priority to the prior-filed PCT application and provisional applications is submitted after expiration of the period specified in 37 CFR 1.78(a)(2)(iii) and 1.78(a)(5)(iii). Therefore, this is a proper petition under 37 CFR 1.78(a)(3) and 1.78(a)(6).

The petition complies with the requirements for a grantable petition under 37 CFR 1.78(a)(3) and 1.78(a)(6) in that (1) a reference to the prior-filed PCT application and provisional applications

has been included in an amendment to the first sentence of the specification following the title, as provided by 37 CFR 1.78(a)(5)(iii); (2) the surcharge fee required by 37 CFR 1.17(t) has been submitted; and (3) the petition contains a proper statement of unintentional delay. Accordingly, having found that the instant petition for acceptance of an unintentionally delayed claim for the benefit of priority under 35 U.S.C. §§ 120, 365(c) and 119(e) to the prior-filed applications satisfies the conditions of 37 CFR §§ 1.78(a)(3) and 1.78(a)(6), the petition is granted.

The granting of the petition to accept the delayed benefit claim to the prior-filed applications under 37 CFR 1.78(a)(3) and 1.78(a)(6) should not be construed as meaning that the instant application is entitled to the benefit of the filing date of the prior-filed applications. In order for the instant application to be entitled to the benefit of the prior-filed applications, all other requirements under 35 U.S.C. § 120 and 1.78(a)(1) and (a)(2) and under 35 U.S.C. § 119(e) and 37 CFR 1.78(a)(4) and (a)(5) must be met. Accordingly, the examiner will, in due course, consider this benefit claim and determine whether the instant application is entitled to the benefit of the earlier filing date.

A corrected Filing Receipt, which includes the priority claim to the prior-filed PCT application and provisional applications, accompanies this decision on petition.

Any inquiries concerning this decision may be directed to Wan Laymon at (571) 272-3220. All other inquiries concerning either the examination procedures or status of the application should be directed to the Technology Center.

This matter is being referred to Technology Center Art Unit 3754 for consideration by the examiner of the claim under 35 U.S.C. § §120, 365(c) and 37 CFR 1.78(a)(2) for the benefit of the prior-filed PCT application, and for consideration of the claim under 35 U.S.C. §119(e) and 37 CFR 1.78(a)(5) for the benefit of the prior-filed provisional applications.

Frances Hicks
Lead Petitions Examiner
Office of Petitions
Office of the Deputy Commissioner
for Patent Examination Policy

ATTACHMENT: Corrected Filing Receipt

UNITED STATES PATENT AND TRADEMARK OFFICE

UNITED STATES DEPARTMENT OF COMMERCE
United States Patent and Trademark Office
Address: COMMISSIONER FOR PATENTS
P.O. Box 1450
Alexandria, Virginia 22313-1450
www.uspto.gov

APPL NO.	FILING OR 371 (c) DATE	ART UNIT	FIL FEE REC'D	ATTY.DOCKET NO	DRAWINGS	TOT CLMS	IND CLMS
10/858,371	06/02/2004	3754	507	82574	15	24	5

CONFIRMATION NO. 5528

CORRECTED FILING RECEIPT

OC000000018271930

20529
NATH & ASSOCIATES
112 South West Street
Alexandria, VA 22314

Date Mailed: 03/13/2006

Receipt is acknowledged of this regular Patent Application. It will be considered in its order and you will be notified as to the results of the examination. Be sure to provide the U.S. APPLICATION NUMBER, FILING DATE, NAME OF APPLICANT, and TITLE OF INVENTION when inquiring about this application. Fees transmitted by check or draft are subject to collection. Please verify the accuracy of the data presented on this receipt. **If an error is noted on this Filing Receipt, please mail to the Commissioner for Patents P.O. Box 1450 Alexandria Va 22313-1450. Please provide a copy of this Filing Receipt with the changes noted thereon. If you received a "Notice to File Missing Parts" for this application, please submit any corrections to this Filing Receipt with your reply to the Notice. When the USPTO processes the reply to the Notice, the USPTO will generate another Filing Receipt incorporating the requested corrections (if appropriate).**

Applicant(s)

Gabriel Cabelli, Tel Aviv, ISRAEL;

Power of Attorney: The patent practitioners associated with Customer Number **020529**.

Domestic Priority data as claimed by applicant

This application is a CON of PCT/IL02/00964 11/29/2002
which claims benefit of 60/336,157 12/06/2001
and claims benefit of 60/370,222 04/08/2002
and claims benefit of 60/405,342 08/23/2002
and claims benefit of 60/405,343 08/23/2002

Foreign Applications

If Required, Foreign Filing License Granted: 07/24/2004

The country code and number of your priority application, to be used for filing abroad under the Paris Convention, is US10/858,371

Projected Publication Date: Not Applicable

Non-Publication Request: No

Early Publication Request: No

** SMALL ENTITY **

Title

Hand held fluent dispensing containers

Preliminary Class

222

PROTECTING YOUR INVENTION OUTSIDE THE UNITED STATES

Since the rights granted by a U.S. patent extend only throughout the territory of the United States and have no effect in a foreign country, an inventor who wishes patent protection in another country must apply for a patent in a specific country or in regional patent offices. Applicants may wish to consider the filing of an international application under the Patent Cooperation Treaty (PCT). An international (PCT) application generally has the same effect as a regular national patent application in each PCT-member country. The PCT process **simplifies** the filing of patent applications on the same invention in member countries, but **does not result** in a grant of "an international patent" and does not eliminate the need of applicants to file additional documents and fees in countries where patent protection is desired.

Almost every country has its own patent law, and a person desiring a patent in a particular country must make an application for patent in that country in accordance with its particular laws. Since the laws of many countries differ in various respects from the patent law of the United States, applicants are advised to seek guidance from specific foreign countries to ensure that patent rights are not lost prematurely.

Applicants also are advised that in the case of inventions made in the United States, the Director of the USPTO must issue a license before applicants can apply for a patent in a foreign country. The filing of a U.S. patent application serves as a request for a foreign filing license. The application's filing receipt contains further information and guidance as to the status of applicant's license for foreign filing.

Applicants may wish to consult the USPTO booklet, "General Information Concerning Patents" (specifically, the section entitled "Treaties and Foreign Patents") for more information on timeframes and deadlines for filing foreign patent applications. The guide is available either by contacting the USPTO Contact Center at 800-786-9199, or it can be viewed on the USPTO website at http://www.uspto.gov/web/offices/pac/doc/general/index.html.

For information on preventing theft of your intellectual property (patents, trademarks and copyrights), you may wish to consult the U.S. Government website, http://www.stopfakes.gov. Part of a Department of Commerce initiative, this website includes self-help "toolkits" giving innovators guidance on how to protect intellectual property in specific countries such as China, Korea and Mexico. For questions regarding patent enforcement issues, applicants may call the U.S. Government hotline at 1-866-999-HALT (1-866-999-4158).

LICENSE FOR FOREIGN FILING UNDER
Title 35, United States Code, Section 184
Title 37, Code of Federal Regulations, 5.11 & 5.15

GRANTED

The applicant has been granted a license under 35 U.S.C. 184, if the phrase "IF REQUIRED, FOREIGN FILING LICENSE GRANTED" followed by a date appears on this form. Such licenses are issued in all applications where the conditions for issuance of a license have been met, regardless of whether or not a license may be required as set forth in 37 CFR 5.15. The scope and limitations of this license are set forth in 37 CFR 5.15(a) unless an earlier license has been issued under 37 CFR 5.15(b). The license is subject to revocation upon written notification. The date indicated is the effective date of the license, unless an earlier license of similar scope has been granted under 37 CFR 5.13 or 5.14.

This license is to be retained by the licensee and may be used at any time on or after the effective date thereof unless it is revoked. This license is automatically transferred to any related applications(s) filed under 37 CFR 1.53(d). This license is not retroactive.

The grant of a license does not in any way lessen the responsibility of a licensee for the security of the subject matter as imposed by any Government contract or the provisions of existing laws relating to espionage and the national security or the export of technical data. Licensees should apprise themselves of current regulations especially with respect to certain countries, of other agencies, particularly the Office of Defense Trade Controls, Department of State (with respect to Arms, Munitions and Implements of War (22 CFR 121-128)); the Bureau of Industry and Security, Department of Commerce (15 CFR parts 730-774); the Office of Foreign Assets Control, Department of Treasury (31 CFR Parts 500+) and the Department of Energy.

NOT GRANTED

No license under 35 U.S.C. 184 has been granted at this time, if the phrase "IF REQUIRED, FOREIGN FILING LICENSE GRANTED" DOES NOT appear on this form. Applicant may still petition for a license under 37 CFR 5.12, if a license is desired before the expiration of 6 months from the filing date of the application. If 6 months has lapsed from the filing date of this application and the licensee has not received any indication of a secrecy order under 35 U.S.C. 181, the licensee may foreign file the application pursuant to 37 CFR 5.15(b).

UNITED STATES PATENT AND TRADEMARK OFFICE

Commissioner for Patents
United States Patent and Trademark Office
P.O. Box 1450
Alexandria, VA 22313-1450
www.uspto.gov
DIW Feb-08

ANTONELLI, TERRY, STOUT & KRAUS, LLP
1300 NORTH SEVENTEENTH STREET
SUITE 1800
ARLINGTON VA 22209-3873

COPY MAILED

FEB 05 2008

OFFICE OF PETITIONS

In re Application of	:	
Sugihara et al.	:	DECISION ON PETITION TO
Application Number: 10/858380	:	WITHDRAW HOLDING OF
Filing Date: 06/02/2004	:	ABANDONMENT
Attorney Docket Number:	:	
500.43917X00	:	

This is a decision on the petition filed on January 15, 2008, to withdraw the holding of abandonment in the above-identified application.

The petition is **GRANTED**.

The application was held abandoned for failure to timely submit the issue and publication fees in response to the Notice of Allowance and Fee(s) Due mailed on September 14, 2007, which set a three (3) month statutory period for reply. Notice of Abandonment was mailed on January 9, 2008.

Petitioner asserts that the Notice mailed on September 14, 2007, was never received.

In the absence of any irregularity in the mailing of the Notice of Allowance and Fee(s) Due ("the Notice"), there is a strong presumption that the Notice was properly mailed to practitioner at the address of record. This presumption may be overcome by a showing that the Notice was not in fact received. The showing required to establish the failure to receive an Office communication must include a statement from the practitioner stating that the Office communication was not received by the practitioner and attesting to the fact that a search of the file jacket and docket records indicates that the Office communication was not received. A copy of the docket record where the non-received Office communication would have been entered had it been received and docketed must be attached to and referenced in practitioner's statement. See "Withdrawing the Holding of

Abandonment When Office Actions Are Not Received" 1156 Official Gazette 53 (November 16, 1993) and M.P.E.P. § 711.03(c). The showing outlined above may not be sufficient if there are circumstances that point to a conclusion that the Office communication may have been lost after receipt rather than a conclusion that the Office communication was lost in the mail.

A review of the record indicates that the Notice was properly mailed to petitioner at the correspondence address of record at the time of mailing. Thus, there was no irregularity in mailing the Notice on the part of the United States Patent and Trademark Office.

In support of the petition, the petitioners' counsel, registered patent practitioner, Paul J. Skwierawski, asserts that he reviewed the docketing computer records and the file for the above-identified application, and that no indication of receipt of a notice of allowance dated September 14, 2007 for such application appears therein. (emphasis in original). A copy of the computer docket record and handwritten Docket Book for December 14, 2007, the date the response to the Notice was due have been docketed and entered had it been received has been provided and has been referenced in the practitioner's statement.

The petitioner has made a sufficient showing of nonreceipt of the Notice. Accordingly, the Notice of Abandonment is hereby vacated and the holding of abandonment withdrawn.

The petition is **GRANTED.**

The application file is being referred to the Technology Center Art Unit 2194 for remailing of the Notice mailed on September 14, 2007. The period for reply will be reset from the mailing date thereof.

Telephone inquiries concerning this matter may be directed to the undersigned at (571)272-3231.

D Wood

Douglas I. Wood
Senior Petitions Attorney
Office of Petitions

UNITED STATES PATENT AND TRADEMARK OFFICE

UNITED STATES DEPARTMENT OF COMMERCE
United States Patent and Trademark Office
Address: COMMISSIONER FOR PATENTS
P.O. Box 1450
Alexandria, Virginia 22313-1450
www.uspto.gov

Whirlpool Patents Company - MD 0750
500 Renaissance Drive Suite 102
St Joseph, MI 49085

Mail Date: 04/21/2010

Applicant	: Kristen K. Hedstrom	: DECISION ON REQUEST FOR
Patent Number	: 7665475	: RECALCULATION of PATENT
Issue Date	: 02/23/2010	: TERM ADJUSTMENT IN VIEW
Appliction No	: 10/858,382	: OF WYETH AND NOTICE OF INTENT TO
Filed	: 06/02/2004	: ISSUE CERTIFICATE OF CORRECTION
		:

The Request for Recalculation is **GRANTED** to the extent indicated.

The patent term adjustment has been determined to be **1585** days. The USPTO will *sua sponte* issue a certificate of correction reflecting the amount of PTA days determined by the recalculation.

Prior to the issuance of the certificate of correction, the USPTO will afford patentee an opportunity to be heard and request reconsideration. Accordingly, patentee has **one month or thirty (30) days**, whichever is longer, to file a request for reconsideration of this patent term adjustment calculation. See 35 U.S.C. 154(b)(3)(B)(ii) and 37 CFR 1.322(a)(4). No extensions of time will be granted under 37 CFR 1.136.

Patentee should use document code PET.OP if electronically filing a request for reconsideration of this patent term adjustment calculation. The patentee must also include the information required by 37 CFR 1.705(b)(2) and the fee required by 37 CFR 1.18(e). If patentee does not file a timely request for reconsideration of this patent term adjustment calculation including the information required by 37 CFR 1.705(b)(2) and the fee required by 37 CFR 1.18(e), the USPTO will issue a certificate of correction reflecting the PTA determination noted above.

Patentee should be aware that in order to preserve the right to review in the United States District Court for the District of Columbia of the USPTO patent term adjustment determination, patentee must ensure that he or she also take the steps required under 35 U.S.C. 154(b)(4)(A) in a timely manner. Nothing in the request for recalculation should be construed as providing an alternative time frame for commencing a civil action under 35 U.S.C. 154(b)(4)(A).

Any questions concerning this decision should be directed to the Office of Patent Legal Administration at 571-272-7702.

UNITED STATES PATENT AND TRADEMARK OFFICE

Commissioner for Patents
United States Patent and Trademark Office
P.O. Box 1450
Alexandria, VA 22313-1450
www.uspto.gov

28694
NOVAK DRUCE & QUIGG, LLP
1300 Eye Street NW
Suite 400 East Tower
Washington, DC 20005

COPY MAILED
AUG 0 4 2005
OFFICE OF PETITIONS

In re Application of
BERG, Isaac
Application No.: 10/858,391
Filing Date: June 2, 2004
Docket No.: 2227-104
For: MIRRORED ORAL-PRODUCT CONTAINER

DECISION

ON PETITION UNDER

37 CFR 1.137(b)

This is a decision on applicant's "Petition Under 37 C.F.R. 1.137(B)" filed on March 18, 2005. The petition is **GRANTED**.

The above-identified application became abandoned for failure to file a timely and proper reply to the Notice to File Missing Parts mailed July 27, 2004. This Notice set a two (2) month period for reply, with extensions of time obtainable under 37 CFR 1.136(a).

Petitioner has met the requirements for revival under 37 CFR 1.137(b). Petitioner submitted a declaration in compliance with 37 CFR 1.63, the required filing fees, the surcharge fee, the petition fee and made the required statement of unintentional delay. No terminal disclaimer is required. Accordingly, all requirements of 37 CFR 1.137(b) have been satisfied.

Pursuant to 37 CFR 1.136, an extension of time must be filed prior to the expiration of the maximum period obtainable for reply to avoid abandonment. Accordingly, since the extension of time submitted with the petition on March 18, 2005 was subsequent to the maximum period obtainable for reply, this fee is unnecessary and will be credited to petitioner's credit card.

This application is being forwarded to the Office of Initial Patent Examination for continued processing.

James Thomson
Attorney Advisor
PCT Legal Adminstration

Tel: 571-272-3292

Brian Hearn
Petitions Examiner
Office of Petitions

UNITED STATES PATENT AND TRADEMARK OFFICE

COMMISSIONER FOR PATENTS
UNITED STATES PATENT AND TRADEMARK OFFICE
P.O. BOX 1450
ALEXANDRIA, VA 22313-1450
www.uspto.gov

MAILED

JUN 28 2010

OFFICE OF PETITIONS

FOLEY AND LARDNER LLP
SUITE 500
3000 K STREET NW
WASHINGTON DC 20007

In re Application of	:	
PALUMBO et al.	:	
Application No. 10/858,399	:	ON APPLICATION FOR
Filed: 06/02/2004	:	PATENT TERM ADJUSTMENT
Attorney Docket No. 088734-1115	:	

This is in response to the "REQUEST FOR RECONSIDERATION OF PATENT TERM ADJUSTMENT UNDER 37 C.F.R. § 1.705" filed March 22, 2010. Applicants submit that the correct patent term adjustment to be indicated on the patent is 1344 days, not 782 day as calculated by the Office as of the mailing of the initial determination of patent term adjustment. Applicants seek this correction solely on the basis that the Office will take in excess of three years to issue this patent.

As the instant application for patent term adjustment requests reconsideration of the patent term adjustment as it relates to the Office's failure to issue the patent within three years of the filing date, the application for patent term adjustment under 37 CFR 1.705(b) is **DISMISSED as PREMATURE**.

Knowledge of the actual date the patent issues is required to calculate the amount, if any, of additional patent term patentees are entitled to for Office failure to issue the patent within three years. See 37 CFR 1.702(b). (This is true even where a request for continued examination (RCE) was filed). The computer will not undertake the § 1.702(b) calculation until the actual date of issuance of the patent has been determined. Likewise, the computer will not calculate any further Office delay under 37 CFR 1.702(a)(4) or applicant delay under 37 CFR

1.704(c)(10) until the actual date of issuance of the patent has been determined. As such, the Office cannot make a determination on the correctness of the patent term adjustment until the patent has issued.

Requesting reconsideration of the patent term adjustment to be indicated on the patent under 37 CFR 1.705(b) based on the initial determination of patent term adjustment and a projected issuance date of the patent (or even the filing date of the request for continued examination) is premature. Accordingly, it is appropriate to dismiss such a request as premature.

Rather than file an application for patent term adjustment under 37 CFR 1.705(b) contesting the 37 CFR 1.702(b) calculation at the time of the mailing of the notice of allowance, applicants are advised that they may wait until the time of the issuance of the patent and file a request for reconsideration of the patent term adjustment pursuant to 37 CFR 1.705(d). As the USPTO does not calculate the amount of time earned pursuant to 37 CFR 1.702(b) until the time of the issuance of the patent, the Office will consider any request for reconsideration of the patent term adjustment due to an error in the calculation of 37 CFR 1.702(b) to be timely if the request for reconsideration is filed within two months of the issuance of the patent. However, as to all other bases for contesting the initial determination of patent term adjustment received with the notice of allowance, applicants must timely file an application for patent term adjustment prior to the payment of the issue fee.[1]

The Office will charge the $200.00 fee set forth in 37 CFR 1.18(e) for consideration of the application for patent term adjustment under 37 CFR 1.705(b).

---

[1] For example, if applicants dispute both the calculation of patent term adjustment under 37 CFR 1.702(a)(1) for Office failure to mail a first Office action or notice of allowance not later than fourteen months after the date on which the application was filed, and under 37 CFR 1.702(b) for Office failure to issue a patent within three years of the actual filing date of the application, then applicants must still timely file an application for patent term adjustment prior to the payment of the issue fee to contest the calculation of Office delay in issuing a first Office action or notice of allowance. See 37 CFR 1.705(b) and 35 U.S.C. 154(b)(3)(B). A dispute as to the calculation of the § 1.702(a)(1) period raised on request for reconsideration of patent term adjustment under 37 CFR 1.705(d) will be dismissed as untimely filed.

Any request for reconsideration of the patent term adjustment indicated on the patent must be timely filed within two months after issuance pursuant to 37 CFR 1.705(d) and must include payment of the required fee under 37 CFR 1.18(e).

The Office of Data Management has been advised of this decision. This application is being referred to the Office of Data Management for issuance of the patent.

Telephone inquiries specific to this decision should be directed to the undersigned at (571) 272-3211.

C. T. Donnell

Christina Tartera Donnell
Senior Petitions Attorney
Office of Petitions

UNITED STATES PATENT AND TRADEMARK OFFICE

UNITED STATES DEPARTMENT OF COMMERCE
United States Patent and Trademark Office
Address: COMMISSIONER FOR PATENTS
P.O. Box 1450
Alexandria, Virginia 22313-1450
www.uspto.gov

MHKKG/Oracle (Sun)
P.O. BOX 398
AUSTIN, TX 78767

Mail Date: 04/20/2010

Applicant	: John H. Howard	: DECISION ON REQUEST FOR
Patent Number	: 7673098	: RECALCULATION of PATENT
Issue Date	: 03/02/2010	: TERM ADJUSTMENT IN VIEW
Appliction No	: 10/858,421	: OF WYETH
Filed	: 06/01/2004	:
		:

The Patentee's Request for Recalculation is **DISMISSED.**

This Request is deemed ineligible for consideration for one or more of the following reasons:

(A). The patent for which PTA recalculation is requested is either a design or reissue application or is a reexamination proceeding;

(B). The patent for which PTA recalculation is requested resulted from a utility or plant application filed under 35 USC 111(a) before May 29, 2000 and no CPA filed in the application on/after May 29, 2000;

(C). The patent for which PTA recalculation is requested resulted from an international application in which the international filing date was before May 29, 2000 and no CPA filed in the application on/after May 29, 2000;

(D). The patent for which PTA recalculation is requested issued on/after March 2, 2010;

(E). The Request for Recalculation was filed more than 180 days after the grant date of the patent and the request was not filed within two months of a dismissal of a request for reconsideration of the of the patent term under 37 CFR 1.705(d);

(F). The Request for Recalculation is not solely limited to USPTO pre-Wyeth interpretation of 35 U.S.C. 154(b)(2)(A);

or

(G). A civil action was filed pursuant to 35 U.S.C. 154(b)(4)(A)concerning the same patent at issue in this request.

Patentee may file a reply to this decision dismissing the Request for Recalculation. Patentee must file such reply within one month or thirty days, whichever is longer, of the mail date of the decision dismissing the Request for Recalculation. No fee is required if patentee is asserting in the reply that the dismissal for ineligibility is improper.

Patentee should use document code PET.OP if electronically filing a reply to this dismissal. If the USPTO finds that the request was improperly deemed ineligible, the USPTO will mail applicant a recalculation determination.

Patentee should be aware that in order to preserve the right to review in the United States District Court for the District of Columbia of the USPTO patent term adjustment determination, patentee must ensure that he or she also take the steps required under 35 U.S.C. 154(b)(4)(A). Nothing in the request for recalculation should be construed as providing an alternative time frame for commencing a civil action under 35 U.S.C. 154 (b)(4)(A).

Any questions concerning this decision should be directed to the Office of Patent Legal Administration at 571-272-7702.

UNITED STATES PATENT AND TRADEMARK OFFICE

Commissioner for Patents
United States Patent and Trademark Office
P.O. Box 1450
Alexandria, VA 22313-1450
www.uspto.gov

KALENKOVICH ALEXANDER
WINNER JOSEFF ST 10/2
HAIFA 32493
ISRAEL
AIR-MAIL

COPY MAILED

APR 13 2006

OFFICE OF PETITIONS

In re Application of	:	
Kapitov, et al.	:	
Application No. 10/858,429	:	ON PETITION
Filed: June 2, 2004	:	
Title: Device for Reduction of a Vertebra	:	

This is a decision on the paper titled "The protest in occasion of decision United States Patent and Trademark Office about a cancelling application No. 10/858,429", filed February 13, 2006, which is being treated as a petition to withdraw the holding of abandonment under 37 CFR 1.181.

The petition under 37 CFR 1.181 is **DISMISSED**.

Any request for reconsideration of this decision must be submitted within **TWO (2) MONTHS** from the mail date of this decision. The reconsideration request should include a cover letter entitled "Renewed Petition under 37 CFR 1.181". Extensions of time under 37 CFR 1.136(a) are permitted.

The above-identified application became abandoned for failure to timely file a response to the Notice of Non-Compliant Amendment mailed June 10, 2005, which set a period for reply of one (1) month. No extensions of time under 37 CFR 1.136(a) were purchased. Accordingly, no reply having received, the above-identified application became abandoned on July 11, 2005. A Notice of Abandonment was mailed on January 24, 2006.

There is no indication that petitioner filed his response on or by July 10, 2005. Petitioner has not included a USPTO date stamped postcard receipt itemizing a timely filed response, or

included a copy of the response bearing a Certificate of Mailing or Transmission pursuant to 37 CFR 1.8.

Petitioner may wish to consider reviving the abandoned application pursuant to 37 CFR 1.137(a) or 37 CFR 1.137(b).

A grantable petition under 37 CFR 1.137(a) must be accompanied by: (1) the reply required to the outstanding Office action or notice, unless previously filed; (2) the petition fee set forth in 37 CFR 1.17(l) - currently **$250** for a small entity; (3) a **showing** to the satisfaction of the Commissioner that the entire delay in filing the required reply from the due date for the reply until the filing of a grantable petition pursuant to this paragraph was **unavoidable**; and (4) any terminal disclaimer (and fee as set forth in 37 CFR 1.20(d)) required pursuant to 37 CFR 1.137(d).

A grantable petition pursuant to 37 CFR 1.137(b) must be accompanied by (1) The reply required to the outstanding Office action or notice, unless previously filed; (2) The petition fee as set forth in 37 CFR 1.17(m) - currently **$750** for a small entity; (3) A **statement** that the entire delay in filing the required reply from the due date for the reply until the filing of a grantable petition pursuant to this paragraph was **unintentional**. The Commissioner may require additional information where there is a question whether the delay was unintentional; and (4) Any terminal disclaimer (and fee as set forth in 37 CFR 1.20(d)) required pursuant to paragraph (d) of this section.

Enclosed for petitioner's convenience are blank copies of Form PTO/SB/61 (unavoidable delay) and PTO/SB/64 (unintentional delay).

Further correspondence with respect to this matter should be addressed as follows:

By mail: Mail Stop Petitions
Commissioner for Patents
P.O. Box 1450
Alexandria VA 22313-1450

By FAX: (571) 273-8300
Attn: Office of Petitions

Telephone inquiries related to this decision should be directed to the undersigned at (571)272-3207.

Cliff Congo
Petitions Attorney
Office of Petitions

Enc: PTO/SB/61 (3 pages)
PTO/SB/64 (2 pages)
Statement of Privacy Act (1 page)

PTO/SB/61 (10-05)
Approved for use through 07/31/2006. OMB 0651-0031
U.S. Patent and Trademark Office; U.S. DEPARTMENT OF COMMERCE
Under the Paperwork Reduction Act of 1995, no persons are required to respond to a collection of information unless it displays a valid OMB control number.

PETITION FOR REVIVAL OF AN APPLICATION FOR PATENT ABANDONED UNAVOIDABLY UNDER 37 CFR 1.137(a)	Docket Number (Optional)

First Named Inventor: Art Unit:

Application Number: Examiner:

Filed:

Title:

Attention: Office of Petitions
Mail Stop Petition
Commissioner for Patents
P.O. Box 1450
Alexandria, VA 22313-1450

NOTE: If information or assistance is needed in completing this form, please contact Petitions Information at (571) 272-3282.

The above-identified application became abandoned for failure to file a timely and proper reply to a notice or action by the United Sates Patent and Trademark Office. The date of abandonment is the day after the expiration date of the period set for reply in the Office notice or action plus any extensions of time actually obtained.

APPLICANT HEREBY PETITIONS FOR REVIVAL OF THIS APPLICATION.
NOTE: A grantable petition requires the following items:
(1) Petition fee.
(2) Reply and/or issue fee.
(3) Terminal disclaimer with disclaimer fee-required for all utility and plant applications filed before June 8, 1995, and for all design applications; and
(4) Adequate showing of the cause of unavoidable delay.

1. Petition fee

☐ Small entity – fee $_____ (37 CFR 1.17(l)). Applicant claims small entity status. See 37 CFR 1.27.

☐ Other than small entity – fee $_____ (37 CFR 1.17(l)).

2. Reply and/or fee

A The reply and/or fee to the above-noted Office action in the form of _____ (identify the type of reply):

☐ has been filed previously on _____ .

☐ is enclosed herewith.

B The issue fee of $ _____

☐ has been filed previously on _____ .

☐ is enclosed herewith.

This collection of information is required by 37 CFR 1.137(a). The information is required to obtain or retain a benefit by the public which is to file (and by the USPTO to process) an application. Confidentiality is governed by 35 U.S.C. 122 and 37 CFR 1.11 and 1.14. This collection is estimated to take 8 hours to complete, including gathering, preparing, and submitting the completed application form to the USPTO. Time will vary depending upon the individual case. Any comments on the amount of time you require to complete this form and/or suggestions for reducing this burden, should be sent to the Chief Information Officer, U.S. Patent and Trademark Office, U.S. Department of Commerce, P.O. Box 1450, Alexandria, VA 22313-1450. DO NOT SEND FEES OR COMPLETED FORMS TO THIS ADDRESS. **SEND TO: Mail Stop Petition, Commissioner for Patents, P.O. Box 1450, Alexandria, VA 22313-1450.**
If you need assistance in completing the form, call 1-800-PTO-9199 and select option 2.

Under the Paperwork Reduction Act of 1995, no persons are required to respond to a collection of information unless it displays a valid OMB control number.

PETITION FOR REVIVAL OF AN APPLICATION FOR PATENT ABANDONED UNAVOIDABLY UNDER 37 CFR 1.137(a)

3. Terminal disclaimer with disclaimer fee

☐ Since this utility/plant application was filed on or after June 8, 1995, no terminal disclaimer is required.

☐ A terminal disclaimer (and disclaimer fee (37 CFR 1.20(d)) of $ _____ for a small entity or $ _____ for other than a small entity) disclaiming the required period of time is enclosed herewith (see PTO/SB/63).

4. An adequate showing of the cause of the delay, and that the entire delay in filing the required reply from the due date for the reply until the filing of a grantable petition under 37 CFR 1.137(a) was unavoidable, is enclosed.

WARNING:

Petitioner/applicant is cautioned to avoid submitting personal information in documents filed in a patent application that may contribute to identity theft. Personal information such as social security numbers, bank account numbers, or credit card numbers (other than a check or credit card authorization form PTO-2038 submitted for payment purposes) is never required by the USPTO to support a petition or an application. If this type of personal information is included in documents submitted to the USPTO, petitioners/applicants should consider redacting such personal information from the documents before submitting them to the USPTO. Petitioner/applicant is advised that the record of a patent application is available to the public after publication of the application (unless a non-publication request in compliance with 37 CFR 1.213(a) is made in the application) or issuance of a patent. Furthermore, the record from an abandoned application may also be available to the public if the application is referenced in a published application or an issued patent (see 37 CFR 1.14). Checks and credit card authorization forms PTO-2038 submitted for payment purposes are not retained in the application file and therefore are not publicly available.

Signature	Date
Typed or printed name	Registration Number, if applicable
Address	Telephone Number
Address	

Enclosure
☐ Fee Payment
☐ Reply
☐ Terminal Disclaimer Form
☐ Additional sheets containing statements establishing unavoidable delay
☐ _____

CERTIFICATE OF MAILING OR TRANSMISSION (37 CFR 1.8(a))

I hereby certify that this correspondence is being:

☐ deposited with the United States Postal Service on the date shown below with sufficient postage as first class mail in an envelope addressed to **Mail Stop Petition**, Commissioner for Patents, P.O. Box 1450, Alexandria, VA 22313-1450.

☐ transmitted by facsimile on the date shown below to the United States Patent and Trademark Office at (571) 273-8300.

Date	Signature
	Typed or printed name of person signing certificate

Under the Paperwork Reduction Act of 1995, no persons are required to respond to a collection of information unless it displays a valid OMB control number.

PETITION FOR REVIVAL OF AN APPLICATION FOR PATENT ABANDONED UNAVOIDABLY UNDER 37 CFR 1.137(a)

NOTE: The following showing of the cause of unavoidable delay must be signed by all applicants or by any other party who is presenting statements concerning the cause of delay.

Signature	Date
Typed or printed name	Registration Number, if applicable

(In the space provided below, please explain in detail the reasons for the delay in filing a proper reply.)

(Please attach additional sheets if additional space is needed.)

PTO/SB/64 (10-05)
Approved for use through 07/31/2006. OMB 0651-0031
U.S. Patent and Trademark Office; U.S. DEPARTMENT OF COMMERCE
Under the Paperwork Reduction Act of 1995, no persons are required to respond to a collection of information unless it displays a valid OMB control number.

PETITION FOR REVIVAL OF AN APPLICATION FOR PATENT ABANDONED UNINTENTIONALLY UNDER 37 CFR 1.137(b)

Docket Number (Optional)

First named inventor:

Application No.: Art Unit:

Filed: Examiner:

Title:

Attention: Office of Petitions
Mail Stop Petition
Commissioner for Patents
P.O. Box 1450
Alexandria, VA 22313-1450
FAX (571) 273-8300

NOTE: If information or assistance is needed in completing this form, please contact Petitions Information at (571) 272-3282.

The above-identified application became abandoned for failure to file a timely and proper reply to a notice or action by the United States Patent and Trademark Office. The date of abandonment is the day after the expiration date of the period set for reply in the office notice or action plus an extensions of time actually obtained.

APPLICANT HEREBY PETITIONS FOR REVIVAL OF THIS APPLICATION

NOTE: A grantable petition requires the following items:
(1) Petition fee;
(2) Reply and/or issue fee;
(3) Terminal disclaimer with disclaimer fee - required for all utility and plant applications filed before June 8, 1995; and for all design applications; and
(4) Statement that the entire delay was unintentional.

1. Petition fee

☐ Small entity-fee $ _____ (37 CFR 1.17(m)). Applicant claims small entity status. See 37 CFR 1.27.

☐ Other than small entity – fee $ _____ (37 CFR 1.17(m))

2. Reply and/or fee

A. The reply and/or fee to the above-noted Office action in the form of _____(identify type of reply):

☐ has been filed previously on _____.
☐ is enclosed herewith.

B. The issue fee and publication fee (if applicable) of $ _____.
☐ has been paid previously on _____.
☐ is enclosed herewith.

This collection of information is required by 37 CFR 1.137(b). The information is required to obtain or retain a benefit by the public which is to file (and by the USPTO to process) an application. Confidentiality is governed by 35 U.S.C. 122 and 37 CFR 1.11 and 1.14. This collection is estimated to take 1.0 hour to complete, including gathering, preparing, and submitting the completed application form to the USPTO. Time will vary depending upon the individual case. Any comments on the amount of time you require to complete this form and/or suggestions for reducing this burden, should be sent to the Chief Information Officer, U.S. Patent and Trademark Office, U.S. Department of Commerce, P.O. Box 1450, Alexandria, VA 22313-1450. DO NOT SEND FEES OR COMPLETED FORMS TO THIS ADDRESS. **SEND TO: Mail Stop Petition, Commissioner for Patents, P.O. Box 1450, Alexandria, VA 22313-1450.**

If you need assistance in completing the form, call 1-800-PTO-9199 and select option 2.

Under the Paperwork Reduction Act of 1995, no persons are required to respond to a collection of information unless it displays a valid OMB control number.

3. Terminal disclaimer with disclaimer fee

☐ Since this utility/plant application was filed on or after June 8, 1995, no terminal disclaimer is required.

☐ A terminal disclaimer (and disclaimer fee (37 CFR 1.20(d)) of $ _____ for a small entity or $ _____ for other than a small entity) disclaiming the required period of time is enclosed herewith (see PTO/SB/63).

4. STATEMENT: The entire delay in filing the required reply from the due date for the required reply until the filing of a grantable petition under 37 CFR 1.137(b) was unintentional. [NOTE: The United States Patent and Trademark Office may require additional information if there is a question as to whether either the abandonment or the delay in filing a petition under 37 CFR 1.137(b) was unintentional (MPEP 711.03(c), subsections (III)(C) and (D)).]

WARNING:

Petitioner/applicant is cautioned to avoid submitting personal information in documents filed in a patent application that may contribute to identity theft. Personal information such as social security numbers, bank account numbers, or credit card numbers (other than a check or credit card authorization form PTO-2038 submitted for payment purposes) is never required by the USPTO to support a petition or an application. If this type of personal information is included in documents submitted to the USPTO, petitioners/applicants should consider redacting such personal information from the documents before submitting them to the USPTO. Petitioner/applicant is advised that the record of a patent application is available to the public after publication of the application (unless a non-publication request in compliance with 37 CFR 1.213(a) is made in the application) or issuance of a patent. Furthermore, the record from an abandoned application may also be available to the public if the application is referenced in a published application or an issued patent (see 37 CFR 1.14). Checks and credit card authorization forms PTO-2038 submitted for payment purposes are not retained in the application file and therefore are not publicly available.

Signature	Date
Typed or printed name	Registration Number, if applicable
Address	Telephone Number
Address	

Enclosures: ☐ Fee Payment

☐ Reply

☐ Terminal Disclaimer Form

☐ Additional sheets containing statements establishing unintentional delay

☐ Other: _____

CERTIFICATE OF MAILING OR TRANSMISSION [37 CFR 1.8(a)]

I hereby certify that this correspondence is being:

☐ Deposited with the United States Postal Service on the date shown below with sufficient postage as first class mail in an envelope addressed to: Mail Stop Petition, Commissioner for Patents, P. O. Box 1450, Alexandria, VA 22313-1450.

☐ Transmitted by facsimile on the date shown below to the United States Patent and Trademark Office as (571) 273-8300.

Date	Signature
	Typed or printed name of person signing certificate

Privacy Act Statement

The **Privacy Act of 1974 (P.L. 93-579)** requires that you be given certain information in connection with your submission of the attached form related to a patent application or patent. Accordingly, pursuant to the requirements of the Act, please be advised that: (1) the general authority for the collection of this information is 35 U.S.C. 2(b)(2); (2) furnishing of the information solicited is voluntary; and (3) the principal purpose for which the information is used by the U.S. Patent and Trademark Office is to process and/or examine your submission related to a patent application or patent. If you do not furnish the requested information, the U.S. Patent and Trademark Office may not be able to process and/or examine your submission, which may result in termination of proceedings or abandonment of the application or expiration of the patent.

The information provided by you in this form will be subject to the following routine uses:

1. The information on this form will be treated confidentially to the extent allowed under the Freedom of Information Act (5 U.S.C. 552) and the Privacy Act (5 U.S.C 552a). Records from this system of records may be disclosed to the Department of Justice to determine whether disclosure of these records is required by the Freedom of Information Act.
2. A record from this system of records may be disclosed, as a routine use, in the course of presenting evidence to a court, magistrate, or administrative tribunal, including disclosures to opposing counsel in the course of settlement negotiations.
3. A record in this system of records may be disclosed, as a routine use, to a Member of Congress submitting a request involving an individual, to whom the record pertains, when the individual has requested assistance from the Member with respect to the subject matter of the record.
4. A record in this system of records may be disclosed, as a routine use, to a contractor of the Agency having need for the information in order to perform a contract. Recipients of information shall be required to comply with the requirements of the Privacy Act of 1974, as amended, pursuant to 5 U.S.C. 552a(m).
5. A record related to an International Application filed under the Patent Cooperation Treaty in this system of records may be disclosed, as a routine use, to the International Bureau of the World Intellectual Property Organization, pursuant to the Patent Cooperation Treaty.
6. A record in this system of records may be disclosed, as a routine use, to another federal agency for purposes of National Security review (35 U.S.C. 181) and for review pursuant to the Atomic Energy Act (42 U.S.C. 218(c)).
7. A record from this system of records may be disclosed, as a routine use, to the Administrator, General Services, or his/her designee, during an inspection of records conducted by GSA as part of that agency's responsibility to recommend improvements in records management practices and programs, under authority of 44 U.S.C. 2904 and 2906. Such disclosure shall be made in accordance with the GSA regulations governing inspection of records for this purpose, and any other relevant (*i.e.*, GSA or Commerce) directive. Such disclosure shall not be used to make determinations about individuals.
8. A record from this system of records may be disclosed, as a routine use, to the public after either publication of the application pursuant to 35 U.S.C. 122(b) or issuance of a patent pursuant to 35 U.S.C. 151. Further, a record may be disclosed, subject to the limitations of 37 CFR 1.14, as a routine use, to the public if the record was filed in an application which became abandoned or in which the proceedings were terminated and which application is referenced by either a published application, an application open to public inspection or an issued patent.
9. A record from this system of records may be disclosed, as a routine use, to a Federal, State, or local law enforcement agency, if the USPTO becomes aware of a violation or potential violation of law or regulation.

UNITED STATES PATENT AND TRADEMARK OFFICE

Commissioner for Patents
United States Patent and Trademark Office
P.O. Box 1450
Alexandria, VA 22313-1450
www.uspto.gov

FISH & RICHARDSON P.C.
P.O. BOX 1022
MINNEAPOLIS, MN 55440-1022

COPY MAILED

SEP 30 2008

OFFICE OF PETITIONS

In re Application of :
YAMAZAKI, et al. :
Application No. 10/858,445 :
Filed: June 2, 2004 :
Attorney Docket No. **12732-006002** :

DECISION GRANTING PETITION
UNDER 37 CFR 1.313(c)(2)

This is a decision on the petition under 37 CFR 1.313(c)(2), filed September 30, 2008, to withdraw the above-identified application from issue after payment of the issue fee.

The petition is GRANTED.

The above-identified application is withdrawn from issue for consideration of a submission under 37 CFR 1.114 (request for continued examination). *See* 37 CFR 1.313(c)(2).

Petitioner is advised that the issue fee paid on August 26, 2008 *cannot be refunded. If, however, this application is again allowed, petitioner may request that it be applied towards the issue fee required by the new Notice of Allowance.*[1]

Telephone inquiries should be directed to the undersigned at (571) 272-7253.

This application is being referred to Technology Center AU 2629 for processing of the request for continued examination under 37 CFR 1.114 and for consideration of the concurrently filed information disclosure statement.

Monica A. Graves
Petitions Examiner
Office of Petitions

---

[1] *The request to apply the issue fee to the new Notice may be satisfied by completing and returning the new Part B – Fee(s) Transmittal Form (along with any balance due at the time of submission). Petitioner is advised that the Issue Fee Transmittal Form* ***must*** *be completed and timely submitted to avoid abandonment of the application.*

UNITED STATES PATENT AND TRADEMARK OFFICE

COMMISSIONER FOR PATENTS
UNITED STATES PATENT AND TRADEMARK OFFICE
P.O. BOX 1450
ALEXANDRIA, VA 22313-1450
WWW.USPTO.GOV

Paper No. None

Charles N.J. Ruggiero, Esq.
Ohlandt, Greeley, Ruggiero & Perle, L.L.P.
10th Floor
One Landmark Square
Stamford CT 06901-2682

COPY MAILED

JUN 06 2005

OFFICE OF PETITIONS

In re Application of Bernd Hoppe, Andreas Hirsch, Ulrich Fotheringham, Michael Weisser, Paulette Onorato, Edward Skowron, and Vijay Shanbhag Application No. 10/858,461 Filed: June 1, 2004 Attorney Docket No. 2133.039USU Title: HOT FORMED ARTICLES AND METHOD AND APPARATUS FOR HOT-FORMING	:	DECISION ON PETITION UNDER 37 C.F.R. §1.47(A)

This is in response to the petition under 37 C.F.R. §1.47(a)[1], filed March 3, 2005.

On June 1, 2004, the application was deposited with a declaration identifying Bernd Hoppe, Andreas Hirsch, Ulrich Fotheringham, Michael Weisser, Paulette Onorato, Edward Skowron, and Vijay Shanbhag as joint inventors. The declaration had been executed by each of the joint inventors save Mr. Skowron. On July 28, 2004, applicant was mailed a "Notice to File Missing Parts of Nonprovisional Application - Filing Date Granted" (Notice), requiring an executed oath or declaration in compliance with 37 C.F.R. §1.63, as well as the surcharge associated with the

---

1A grantable petition under 37 C.F.R. §1.47(a) requires:
(1) the petition fee of $130;
(2) a surcharge of either $65 or $130 if the petition is not filed at the time of filing the application, as set forth in 37 CFR § 1.16(e);
(3) a statement of the last known address of the non-signing inventors;
(4) either
a) proof that a copy of the entire application (specification, claims, drawings, and the oath or declaration) was sent or given to the non-signing inventor for review and proof that the non-signing inventor refuses to join in the application or
b) proof that the non-signing inventor cannot be found or reached after diligent effort;
(5) a declaration which complies with 37 CFR §1.63.

late submission of an oath or declaration and an abstract. This Notice set a two-month period for reply.

With the instant petition, Petitioner has submitted the petition fee and surcharge, as well as an abstract and a five-month extension of time to make timely this response. Petitioner has set forth that a complete copy of the application was sent to the non-signing inventor at his last known address. The last known address has been provided.

Petitioner has met requirements (1) – (4) above.

Regarding the fifth requirement, petitioner has not submitted a declaration which complies with 37 CFR §1.63. The declaration submitted with the instant petition contains a non-dated change by inventor Hoppe as well as non-initialed and non-dated changes by inventors Hirsch, Fotheringham, Weisser, and Shanbhag [2].

For the above reasons, the petition must be **DISMISSED**.

Any reply must be submitted within **TWO (2) MONTHS** from the mail date of this decision. Extensions of time under 37 C.F.R. §1.136(a) are permitted. The reply should include a cover letter entitled "Renewed Petition Under 37 C.F.R. §1.47(a)," and should include a declaration which has been properly executed. This is not a final agency action within the meaning of 5 U.S.C 704.

The renewed petition should indicate in a prominent manner that the attorney handling this matter is Paul Shanoski.

Any renewed petition may be submitted by mail[3], hand-delivery[4], or facsimile[5].

The general phone number for the Office of Petitions which should be used for status requests is (571) 272-3282. Telephone inquiries regarding *this decision* should be directed to the undersigned at (571) 272-3225.

Paul Shanoski
Senior Attorney
Office of Petitions
United States Patent and Trademark Office

2 See 37 C.F.R. §1.52(c)(1) and MPEP 605.04(a).
3 Mail Stop Petition, Commissioner for Patents, United States Patent and Trademark Office, P.O. Box 1450, Alexandria, VA, 22313-1450.
4 Customer Window, Mail Stop Petition, Crystal Plaza Two, Lobby, Room 1B03, Arlington, Virginia 22202.
5 (703) 872-9306 - please note this is a central facsimile number, and as such, there will be a delay in the delivery of the facsimile to the undersigned, which could be as much as one month.

UNITED STATES PATENT AND TRADEMARK OFFICE

Commissioner for Patents
United States Patent and Trademark Office
P.O. Box 1450
Alexandria, VA 22313-1450
www.uspto.gov

Paper No. None

Charles N.J. Ruggiero, Esq.
Ohlandt, Greeley, Ruggiero & Perle, L.L.P.
10th Floor
One Landmark Square
Stamford CT 06901-2682

COPY MAILED

SEP 2 1 2005

OFFICE OF PETITIONS

In re Application of Bernd Hoppe, Andreas Hirsch, Ulrich Fotheringham, Michael Weisser, Paulette Onorato, Edward Skowron, and Vijay Shanbhag Application No. 10/858,461 Filed: June 1, 2004 Attorney Docket No. 2133.039USU Title: HOT FORMED ARTICLES AND METHOD AND APPARATUS FOR HOT-FORMING	DECISION ON RENEWED PETITION UNDER 37 C.F.R. §1.47(A)

This is in response to the renewed petition under 37 C.F.R. §1.47(a)[1], filed September 9, 2005.

On June 1, 2004, the application was deposited with a declaration identifying Bernd Hoppe, Andreas Hirsch, Ulrich Fotheringham, Michael Weisser, Paulette Onorato, Edward Skowron, and Vijay Shanbhag as joint inventors. The declaration had been executed by each of the joint inventors save Mr. Skowron. On July 28, 2004, applicant was mailed a "Notice to File Missing Parts of Nonprovisional Application - Filing Date Granted" (Notice), requiring an executed oath or declaration in compliance with 37 C.F.R. §1.63, as well as the surcharge associated with the

1A grantable petition under 37 C.F.R. §1.47(a) requires:
(1) the petition fee of $130;
(2) a surcharge of either $65 or $130 if the petition is not filed at the time of filing the application, as set forth in 37 CFR § 1.16(e);
(3) a statement of the last known address of the non-signing inventors;
(4) either
a) proof that a copy of the entire application (specification, claims, drawings, and the oath or declaration) was sent or given to the non-signing inventor for review and proof that the non-signing inventor refuses to join in the application or
b) proof that the non-signing inventor cannot be found or reached after diligent effort;
(5) a declaration which complies with 37 CFR §1.63.

late submission of an oath or declaration and an abstract. This Notice set a two-month period for reply.

With the original petition, submitted on March 3, 2005, Petitioner submitted the petition fee and surcharge, as well as an abstract and a five-month extension of time to make timely this response. Petitioner set forth that a complete copy of the application was sent to the non-signing inventor at his last known address. The original petition was dismissed via the mailing of a decision on June 6, 2005, as the declaration submitted therewith contained a non-dated change by inventor Hoppe as well as non-initialed and non-dated changes by inventors Hirsch, Fotheringham, Weisser, and Shanbhag [2].

With this renewed petition, Petitioner has presented a declaration which has been properly executed by these signing inventors.

Therefore, the renewed petition is **GRANTED** and this application is hereby accorded Rule §1.47(a) status.

As provided in Rule 1.47(a), this Office will forward notice of this application's filing to the non-signing inventor at the address given on the declaration. Notice of the filing of this application will also be published in the Official Gazette.

Telephone inquiries regarding this decision should be directed to the undersigned at (571) 272-3225. All other inquiries concerning examination procedures or status of the application should be directed to the Technology Center.

Paul Shanoski
Senior Attorney
Office of Petitions
United States Patent and Trademark Office

2 See 37 C.F.R. §1.52(c)(1) and MPEP 605.04(a).

UNITED STATES PATENT AND TRADEMARK OFFICE

COMMISSIONER FOR PATENTS
UNITED STATES PATENT AND TRADEMARK OFFICE
P.O. BOX 1450
ALEXANDRIA, VA 22313-1450
www.uspto.gov

HARNESS, DICKEY, & PIERCE, P.L.C
7700 BONHOMME, STE 400
ST. LOUIS, MO 63105

COPY MAILED

NOV 28 2005

OFFICE OF PETITIONS

In re Application of	:	
Ferry et al.	:	
Application No. 10/858,485	:	DECISION REFUSING
Filed: June 1, 2004	:	STATUS UNDER
Title of Invention:	:	37 CFR 1.47
SYSTEMS AND METHODS FOR MEDICAL	:	
DEVICE A DVANCEMENT AND ROTATION	:	

This is a Decision in response to a Petition Under 37 CFR § 1.47(a), filed November 8, 2005, to allow the other inventor(s) to proceed with the application on behalf of himself or herself and the nonsigning inventor(s).

The petition is **dismissed**.

Rule 47 applicant is given TWO (2) MONTHS from the mailing date of this decision to reply, correcting the below-noted deficiencies. Any reply should be entitled "Request for Reconsideration of Petition Under 37 CFR 1.47(a)", and should only address the deficiencies noted below, except that the reply may include an oath or declaration executed by the non-signing inventor. Failure to respond will result in abandonment of the application. Any extensions of time will be governed by 37 CFR 1.136(a).

Background

The above-identified application was filed on June 1, 2004, without an oath or declaration. In response, the Office mailed a Notice to File Missing Parts of Nonprovisional Application (hereinafter "Notice"), on April 7, 2005, requiring *inter alia*, an executed oath or declaration.

In response to the Notice, Applicant files the instant petition and avers that the nonsigning inventor was sent a Declaration and Power of Attorney and Assignment for execution, and that the nonsigning inventor stated that if everything was to his liking,

he would sign the documents, but that he really didn't feel like helping out the Assignee at this time (on or about October 31, 2005)[1].

Applicable Law

A grantable petition under 37 CFR 1.47(a) requires: (1) proof that the non-signing inventor cannot be reached or refuses to sign the oath or declaration after having been presented with the application papers (specification, claims and drawings); (2) an acceptable oath or declaration in compliance with 35 U.S.C. §§ 115 and 116; (3) the petition fee; and (4) a statement of the last known address of the non-signing inventor. Applicant lacks item (1).

As to item (1),

> A refusal by an inventor to sign an oath or declaration when the inventor has not been presented with the application papers does not itself suggest that the inventor is refusing to join the application unless it is clear that the inventor understands exactly what he or she is being asked to sign and refuses to accept the application papers. A copy of the application papers should be sent to the last known address of the nonsigning inventor, or, if the nonsigning inventor is represented by counsel, to the address of the nonsigning inventor's attorney. It is reasonable to require that the inventor be presented with the application papers before a petition under 37 CFR 1.47 is granted since such a procedure ensures that the inventor is apprised of the application to which the oath or declaration is directed. In re Gray, 115 USPQ 80 (Comm'r Pat. 1956).

MPEP 409.03(d)

Conclusion

Applicant must present a copy of the application papers to the inventor, and in this instance provide specifics in a statement of facts as to the time and place of the refusal.

---

[1] This statement falls short of an express oral refusal. See, MPEP 409.03(d).

Further correspondence with respect to this matter should be addressed as follows:

By mail: Commissioner for Patents
PO Box 1450
Alexandria, VA 22313-1450

By FAX: (571) 273-8300
Attn: Office of Petitions

By hand: Customer Service Window
Randolph Building
401 Dulany Street
Alexandria, VA 22314

Telephone inquiries concerning this matter should be directed to the undersigned at (571) 272-3232.

Derek L. Woods
Attorney
Office of Petitions

UNITED STATES PATENT AND TRADEMARK OFFICE

Commissioner for Patents
United States Patent and Trademark Office
P.O. Box 1450
Alexandria, VA 22313-1450
www.uspto.gov

HARNESS, DICKEY, & PIERCE, P.L.C
7700 BONHOMME, STE 400
ST. LOUIS, MO 63105

COPY MAILED

MAR 2 8 2006

OFFICE OF PETITIONS

In re Application of	:	
Ferry et al.	:	
Application No. 10/858,485	:	DECISION GRANTING
Filed: June 1, 2004	:	STATUS UNDER
Title of Invention:	:	37 CFR 1.47
SYSTEMS AND METHODS FOR MEDICAL	:	
DEVICE A DVANCEMENT AND ROTATION	:	

This is a Decision in response to the Request for Reconsideration of the Decision Refusing Status Under 37 CFR § 1.47, filed January 30, 2006, to allow the other inventor(s) to proceed with the application on behalf of himself or herself and the nonsigning inventor(s).

The petition is **granted**.

The above-identified application and papers have been reviewed and found in compliance with 37 CFR 1.47(a). This application is hereby accorded Rule 1.47(a) status.

Petitioner has shown that the non-signing inventor, Cam Habeger, refuses to join in the application.

As provided in Rule 1.47(a), this Office will forward notice of this application's filing to the non-signing inventor at the address given in the Petition. Notice of the filing of this application will also be published in the Official Gazette.

The application file is being returned to the Office of Initial Patent Examination for continued processing.

Telephone inquiries concerning this matter should be directed to Petitions Attorney Derek L. Woods at (571) 272-3232.

Derek L. Woods
Attorney
Office of Petitions

UNITED STATES PATENT AND TRADEMARK OFFICE

Commissioner for Patents
United States Patent and Trademark Office
P.O. Box 1450
Alexandria, VA 22313-1450
www.uspto.gov

MR. CAM HABEGER
16702 205TH AVENUE
BIG LAKE, MN 55309

COPY MAILED

MAR 2 8 2006

OFFICE OF PETITIONS

In re Application of	:	
Ferry et al.	:	
Application No. 10/858,485	:	LETTER
Filed: June 1, 2004	:	
Title of Invention:	:	
SYSTEMS AND METHODS FOR MEDICAL	:	
DEVICE A DVANCEMENT AND ROTATION	:	

Dear Mr. Habeger:

You are named as a joint inventor in the above-identified United States patent application filed under the provisions of 35 U.S.C. 116 (United States Code) and 37 CFR 1.47(a), Rules of Practice in Patent Cases. Should a patent be granted on the application you will be designated therein as a joint inventor.

As a named inventor you are entitled to inspect any paper in the file wrapper of the application, order copies of all or any part thereof (at a prepaid cost per 37 CFR 1.19) or make your position of record in the application. Alternatively, you may arrange to do any of the preceding through a registered patent attorney or agent presenting written authorization from you. If you care to join the application, counsel of record (see below) would presumably assist you. Joining in the application would entail the filing of an appropriate oath or declaration by you pursuant to 37 CFR 1.63.

Telephone inquiries regarding this communication should be directed to the undersigned at (571) 272-3232. Requests for information regarding your application should be directed to the File Information Unit at (703) 308-2733. Information regarding how to pay for and order a copy of the application, or a specific paper in the application, should be directed to Certification Division at (703) 308-9726 or 1-800-972-6382 (outside the Washington D.C. area).

Derek L. Woods
Attorney
Office of Petitions

cc: HARNESS, DICKEY, & PIERCE, P.L.C
7700 BONHOMME, STE 400
ST. LOUIS, MO 63105

UNITED STATES PATENT AND TRADEMARK OFFICE

UNITED STATES DEPARTMENT OF COMMERCE
United States Patent and Trademark Office
Address: COMMISSIONER FOR PATENTS
P.O. Box 1450
Alexandria, Virginia 22313-1450
www.uspto.gov

HARNESS, DICKEY, & PIERCE, P.L.C
7700 Bonhomme, Suite 400
ST. LOUIS, MO 63105

Mail Date: 04/21/2010

Applicant	: Steven J. Ferry	: DECISION ON REQUEST FOR
Patent Number	: 7635342	: RECALCULATION of PATENT
Issue Date	: 12/22/2009	: TERM ADJUSTMENT IN VIEW
Appliction No	: 10/858,485	: OF WYETH AND NOTICE OF INTENT TO
Filed	: 06/01/2004	: ISSUE CERTIFICATE OF CORRECTION
		:

The Request for Recalculation is **GRANTED** to the extent indicated.

The patent term adjustment has been determined to be **1478** days. The USPTO will *sua sponte* issue a certificate of correction reflecting the amount of PTA days determined by the recalculation.

Prior to the issuance of the certificate of correction, the USPTO will afford patentee an opportunity to be heard and request reconsideration. Accordingly, patentee has **one month or thirty (30) days**, whichever is longer, to file a request for reconsideration of this patent term adjustment calculation. See 35 U.S.C. 154(b)(3)(B)(ii) and 37 CFR 1.322(a)(4). No extensions of time will be granted under 37 CFR 1.136.

Patentee should use document code PET.OP if electronically filing a request for reconsideration of this patent term adjustment calculation. The patentee must also include the information required by 37 CFR 1.705(b)(2) and the fee required by 37 CFR 1.18(e). If patentee does not file a timely request for reconsideration of this patent term adjustment calculation including the information required by 37 CFR 1.705(b)(2) and the fee required by 37 CFR 1.18(e), the USPTO will issue a certificate of correction reflecting the PTA determination noted above.

Patentee should be aware that in order to preserve the right to review in the United States District Court for the District of Columbia of the USPTO patent term adjustment determination, patentee must ensure that he or she also take the steps required under 35 U.S.C. 154(b)(4)(A) in a timely manner. Nothing in the request for recalculation should be construed as providing an alternative time frame for commencing a civil action under 35 U.S.C. 154(b)(4)(A).

Any questions concerning this decision should be directed to the Office of Patent Legal Administration at 571-272-7702.

UNITED STATES PATENT AND TRADEMARK OFFICE

COMMISSIONER FOR PATENTS
UNITED STATES PATENT AND TRADEMARK OFFICE
P.O. BOX 1450
ALEXANDRIA, VA 22313-1450
www.uspto.gov

MCI, INC
TECHNOLOGY LAW DEPARTMENT
1133 19TH STREET NW, 10TH FLOOR
WASHINGTON DC 20036

COPY MAILED

FEB 10 2005

OFFICE OF PETITIONS

In re Application of Nick DelRegno, et al. Application No. 10/858,491 Filed: June 1, 2004 Attorney Docket No. RIC04008	DECISION ACCORDING STATUS UNDER 37 CFR 1.47(a)

This is a decision on the Petition under 37 CFR § 1.47(a) filed October 26, 2004.

The petition is **GRANTED**.

The above-identified application was filed on June 1, 2004, without an executed oath or declaration, naming Nick DelRegno, Scott R. Kotria, David E. McDysan, Michael U. Bencheck, Matthew W. Turlington, Ross S. Hardin, Richard C. Schell, Howard Chiu, Lee D. Bengston and William Drake as joint inventors. On July 29, 2004, a Notice to File Missing Parts of Nonprovisional Application mailed July 29, 2004, requiring the statutory basic filing fee, an oath or declaration under 37 CFR 1.63, surcharge under 37 CFR 1.16(e) and replacement drawings in compliance with 37 CFR 1.84 and 37 CFF 1.121.

In response, on October 26, 2004, the present petition was filed, as well as the basic filing fee, surcharge, a declaration under 37 CFR 1.63 and an one-month extention of time. The declaration filed October 26, 2004 is executed by Nick DelRegno, Scott R. Kotria, David E. McDysan, Michael U. Bencheck, Matthew W. Turlington, Ross S. Hardin, Richard C. Schell, and Howard Chiu on behalf of themselves and on behalf of nonsigning inventor William Drake. However, on November 5, 2004 a Notice of Incomplete Reply was mailed stating that the signature of Lee D. Bengston is missing from the declaration. In a communication dated November 29, 2004, petitioner explains that Mr. Bengston was named in error and request a decision on the petition under 37 CFR 1.47(a) filed October 26, 2004. Thereafter on January 31, 2005, a replacement drawing of Figure 7 was filed, with an appropriate petition for extension of time.

The Notice mailed November 5, 2004 was mailed in error and is hereby vacated, since the first executed declaration sets forth the inventorship in accordance with 37 CFR 1.41(a)(1).

The declarations executed in combination by all of the available joint inventors on behalf of themselves and nonsigning joint inventor William Drake and the petition have been reviewed and found in compliance with 37 C.F.R. § 1.47(a). Accordingly, this application is hereby accorded Rule 1.47(a) status.

As provided in new Rule 1.47(c), this Office will forward notice of this application's filing to the non-signing inventor at the address given in the petition. Notice of the filing of this application will also be published in the Official Gazette.

The application file is being forwarded to the Office of Initial Patent Examination for further processing.

Telephone inquires related to this decision should be directed to the undersigned at (571) 272-3204. Telephone inquiries related to OIPE processing should be directed to their hotline at (703) 308-1202.

Sherry D. Brinkley
Petitions Examiner
Office of Petitions
Office of the Deputy Commissioner
for Patent Examination Policy

UNITED STATES PATENT AND TRADEMARK OFFICE

COMMISSIONER FOR PATENTS
UNITED STATES PATENT AND TRADEMARK OFFICE
P.O. BOX 1450
ALEXANDRIA, VA 22313-1450
www.uspto.gov

WILLIAM DRAKE
2866 BELTLINE RD., APT. 377
GARLAND, TX 75044

COPY MAILED

FEB 10 2005

OFFICE OF PETITIONS

LETTER

In re Application of
Nick DelRegno, Scott R. Kotria, David E. McDysan, Michael U. Bencheck, Matthew W. Turlington, Ross S. Hardin, Richard C. Schell, Howard Chiu and William Drake
Application No. 10/858,491
Filed: June 1, 2004
For: APPARATUS AND METHOD FOR TERMINATING SERVICE EMULATION INSTANCES

Dear Mr. Drake:

You are named as a joint inventor in the above-identified United States patent application filed under the provisions of 35 U.S.C. 116 (United States Code) and 37 CFR 1.47(a), Rules of Practice in Patent Cases. Should a patent be granted on the application you will be designated therein as a joint inventor.

As a named inventor you are entitled to inspect any paper in the file wrapper of the application, order copies of all or any part thereof (at a prepaid cost per 37 CFR 1.19) or make your position of record in the application. Alternatively, you may arrange to do any of the preceding through a registered patent attorney or agent presenting written authorization from you. If you care to join the application, counsel of record (see below) would presumably assist you. Joining in the application would entail the filing of an appropriate oath or declaration by you pursuant to 37 CFR 1.63.

Telephone inquiries regarding this communication should be directed to the undersigned at (571) 272-3204. Requests for information regarding your application should be directed to the File Information Unit at (703) 308-2733. Information regarding how to pay for and order a copy of the application, or a specific paper in the application should be directed to the Certification Division at (703) 308-9726 or 1-800-972-6382 (outside the Washington D.C. area).

Sherry D. Brinkley
Petitions Examiner
Office of Petitions
Office of the Deputy Commissioner
For Patent Examination Policy

cc: MCI, INC
TECHNOLOGY LAW DEPARTMENT
1133 19TH STREET NW, 10TH FLOOR
WASHINGTON DC 20036

UNITED STATES PATENT AND TRADEMARK OFFICE

Commissioner for Patents
United States Patent and Trademark Office
P.O. Box 1450
Alexandria, VA 22313-1450
www.uspto.gov
DIW Mar-06

HARNESS, DICKEY & PIERCE, P.L.C.
P.O. BOX 828
BLOOMFIELD HILLS MI 48303

COPY MAILED

MAR 14 2006

OFFICE OF PETITIONS

In re Application of	:	
Nessel et al.	:	DECISION ON PETITIONS
Application No. 10/858,497	:	UNDER 37 CFR 1.78(a)(3) and
Filed: 1 June, 2004	:	37 CFR 1.78(a)(6)
Atty Docket No. 0275M-000753	:	

This is a decision on the petition filed on 15 November, 2005, which is treated as a petition under 37 CFR §§ 1.78(a)(3) and 1.78(a)(6), to accept an unintentionally delayed claim under 35 U.S.C. §§ 120 and 119(e) for the benefit of the prior-filed nonprovisional and provisional applications noted in the petition.

The petition is **DISMISSED**.

A petition for acceptance of a claim for late priority under 37 CFR §§ 1.78(a)(3) and 1.78(a)(6) is only applicable to those applications filed on or after November 29, 2000. Further, the petition is appropriate only after the expiration of the period specified in 37 CFR §§ 1.78(a)(2)(ii) and 1.78(a)(5)(ii). In addition, the petition under 37 CFR §§ 1.78(a)(3) and 1.78(a)(6) must be accompanied by:

(1) the reference required by 35 U.S.C. §§ 120 and 119(e) and 37 CFR §§ 1.78(a)(2)(i) and 1.78(a)(5)(i) of the prior-filed application, unless previously submitted;
(2) the surcharge set forth in § 1.17(t); and
(3) a statement that the entire delay between the date the claim was due under 37 CFR §§ 1.78(a)(2)(ii) and 1.78(a)(5)(ii) and the date the claim was filed was unintentional. The Commissioner may require additional information where there is a question whether the delay was unintentional.

The petition fails to comply with item (1) above.

The reference to the prior-filed applications was not included in the manner specified in 37 CFR 1.78(a)(2) and (a)(5)(*i.e.*, in an ADS or in an amendment to the first sentence following the title

of the specification). Specifically, the present petition does not include an amendment to the specification contained on a separate paper (*See* 37 CFR 1.121(h)), nor is the amendment in compliance with 37 CFR 1.121(b).

It is further noted that while an amendment on a separate paper was filed concurrently with the present petition, said amendment does not address the benefit claims sought in the present petition.

Accordingly, before the petitions under 37 CFR §§ 1.78(a)(3) and (a)(6) can be granted, a renewed petition under 37 CFR §§ 1.78(a)(3) and (a)(6) and either an ADS or an amendment to the first sentence of the specification complying with 37 CFR 1.121 and stating the relationship of the prior-filed applications to the instant application is required.

Further correspondence with respect to this matter should be addressed as follows:

By mail: Mail Stop PETITIONS
Commissioner for Patents
Post Office Box 1450
Alexandria, VA 22313-1450

By hand: Customer Service Window
Mail Stop Petitions
Randolph Building
401 Dulany Street
Alexandria, VA 22314

By fax: (571) 273-8300
ATTN: Office of Petitions

Any questions concerning this matter may be directed to Senior Petitions Attorney Douglas I. Wood at (571) 272-3231.

Frances M. Hicks
Lead Paralegal
Office of Petitions

UNITED STATES PATENT AND TRADEMARK OFFICE

Commissioner for Patents
United States Patent and Trademark Office
P.O. Box 1450
Alexandria, VA 22313-1450
www.uspto.gov
DIW Jul-06

HARNESS, DICKEY & PIERCE, P.L.C.
P.O. BOX 828
BLOOMFIELD HILLS MI 48303

COPY MAILED
JUL 12 2006
OFFICE OF PETITIONS

In re Application of	:	
Nessel et al.	:	DECISION ON PETITIONS
Application No. 10/858,497	:	UNDER 37 CFR 1.78(a)(3) and
Filed: 1 June, 2004	:	37 CFR 1.78(a)(6)
Atty Docket No. 0275M-000753	:	

This is a decision on the renewed petition under 37 CFR §§ 1.78(a)(3) and 1.78(a)(6), filed on 31 March, 2006, to accept an unintentionally delayed claim under 35 U.S.C. §§ 120 and 119(e) for the benefit of priority to the prior-filed nonprovisional and provisional applications noted in the petition and set forth in the concurrently-filed amendment.

The petition is again **DISMISSED**.

A petition for acceptance of a claim for late priority under 37 CFR §§ 1.78(a)(3) and 1.78(a)(6) is only applicable to those applications filed on or after November 29, 2000, and after expiration of the period specified in 37 CFR §§ 1.78(a)(2)(ii) and 1.78(a)(5)(ii). In addition, the petition under 37 CFR §§ 1.78(a)(3) and 1.78(a)(6) must be accompanied by:

(1) the reference required by 35 U.S.C. §§ 120 and 119(e) and 37 CFR §§ 1.78(a)(2)(i) and 1.78(a)(5)(i) of the prior-filed application, unless previously submitted;
(2) the surcharge set forth in § 1.17(t); and
(3) a statement that the entire delay between the date the claim was due under 37 CFR §§ 1.78(a)(2)(ii) and 1.78(a)(5)(ii) and the date the claim was filed was unintentional. The Commissioner may require additional information where there is a question whether the delay was unintentional.

The petition fails to comply with item (1) above.

The amendment is not acceptable as drafted since it improperly incorporates by reference the prior-filed applications. An incorporation by reference statement added after an application's filing date is not effective because no new matter can be added to an application after its filing date (*see* 35 U.S.C. § 132(a)). If an incorporation by reference statement is included in an amendment to the specification to add a benefit claim under 35 U.S.C. § 120 after the filing date of the application, the amendment would not be proper. When a benefit claim under 35 U.S.C. § 120 is submitted after the filing of an application, the reference to the prior filed application cannot include an incorporation by reference statement of the prior application. *See Dart Industries v. Banner*, 636 F.2d 684, 207 USPQ 273 (C.A.D.C. 1980). *Note* MPEP §§ 201.06(c) and 608.04(b).

Before the petition under 37 CFR §§ 1.78(a)(3) and 1.78(a)(6) can be granted, a renewed petition and either an Application Data Sheet or a substitute amendment (complying with the provisions of 37 CFR 1.121 and 37 CFR 1.76(b)(5)) to correct the above matter is required.

Further correspondence with respect to this matter should be addressed as follows:

By mail: Mail Stop PETITIONS
Commissioner for Patents
Post Office Box 1450
Alexandria, VA 22313-1450

By hand: Customer Service Window
Mail Stop Petitions
Randolph Building
401 Dulany Street
Alexandria, VA 22314

By fax: (571) 273-8300
ATTN: Office of Petitions

Any questions concerning this matter may be directed to Senior Petitions Attorney Douglas I. Wood at (571) 272-3231.

Frances M. Hicks
Lead Paralegal
Office of Petitions

UNITED STATES PATENT AND TRADEMARK OFFICE

Commissioner for Patents
United States Patent and Trademark Office
P.O. Box 1450
Alexandria, VA 22313-1450
www.uspto.gov

HARNESS, DICKEY & PIERCE, P.L.C.
P.O. BOX 828
BLOOMFIELD HILLS MI 48303

COPY MAILED

SEP 1 3 2006

OFFICE OF PETITIONS

In re Application of
Nessel et al.
Application No. 10/858,497
Filed: 1 June, 2004
Attorney Docket No. 0275M-000753

DECISION ON PETITIONS
UNDER 37 CFR 1.78(a)(3) AND (a)(6)

This is a decision on the renewed petitions under 37 CFR §§ 1.78(a)(3) and 1.78(a)(6), filed on 19 July, 2006, to accept an unintentionally delayed claim under 35 U.S.C. §§120 and 119(e) for the benefit of priority to the prior-filed applications set forth in the concurrently filed application data sheet (ADS).

The petitions are **GRANTED.**

A petition for acceptance of a claim for late priority under 37 CFR §§ 1.78(a)(3) and 1.78(a)(6) is only applicable to those applications filed on or after November 29, 2000. Further, the petition is appropriate only after the expiration of the period specified in 37 CFR §§ 1.78(a)(2)(ii) and 1.78(a)(5)(ii). In addition, the petition under 37 CFR §§ 1.78(a)(3) and 1.78(a)(6) must be accompanied by:

(1) the reference required by 35 U.S.C. §§ 120 and 119(e) and 37 CFR §§ 1.78(a)(2)(i) and 1.78(a)(5)(i) of the prior-filed application, unless previously submitted;
(2) the surcharge set forth in § 1.17(t); and
(3) a statement that the entire delay between the date the claim was due under 37 CFR §§ 1.78(a)(2)(ii) and 1.78(a)(5)(ii) and the date the claim was filed was unintentional. The Director may require additional where there is a question whether the delay was unintentional.

Additionally, the instant nonprovisional application must be pending at the time of filing of the reference to the prior-filed provisional application(s) as required by 37 CFR 1.78(a)(5)(ii). Further, the nonprovisional application(s) claiming the benefit of the prior-filed provisional application(s) must have been filed within twelve months of the filing date of the prior-filed provisional application(s).

All of the above requirements having been satisfied, the late claim for benefit of priority to the prior-filed applications under 35 U.S.C. §§ 120 and 119(e) is accepted as being unintentionally delayed.

The granting of the petition to accept the delayed benefit claim to the prior-filed applications under 37 CFR §§ 1.78(a)(3) and 1.78(a)(6) should not be construed as meaning that this application is entitled to the benefit of the filing date of the prior-filed applications. In order for this application to be entitled to the benefit of the prior-filed applications, all other requirements under 35 U.S.C. §§120 and 1.78(a)(1) and (a)(2) and under 35 U.S.C. §119(e) and 37 CFR 1.78(a)(4) and (a)(5) must be met. Similarly, the fact that the corrected Filing Receipt accompanying this decision on petition includes the prior-filed applications should not be construed as meaning that applicant is entitled to the claim for benefit of priority to the prior-filed applications noted thereon. Accordingly, the examiner will, in due course, consider this benefit claim and determine whether the application is entitled to the benefit of the earlier filing date.

A corrected Filing Receipt, which includes the priority claim to the prior-filed applications, accompanies this decision on petition.

Any questions concerning this matter may be directed to Senior Petitions Attorney Douglas I. Wood at (571) 272-3231. All other inquiries concerning either the examination procedures or status of the application should be directed to the Technology Center.

This application is being referred to Technology Center Art Unit 3677 for consideration by the examiner of the claim for benefit of priority under 35 U.S.C. § §120 and 119(e) to the prior-filed nonprovisional and provisional applications.

Frances Hicks

Frances Hicks
Lead Paralegal
Office of Petitions

ATTACHMENT : Corrected Filing Receipt

UNITED STATES PATENT AND TRADEMARK OFFICE

UNITED STATES DEPARTMENT OF COMMERCE
United States Patent and Trademark Office
Address: COMMISSIONER FOR PATENTS
P.O. Box 1450
Alexandria, Virginia 22313-1450
www.uspto.gov

APPL NO.	FILING OR 371 (c) DATE	ART UNIT	FIL FEE REC'D	ATTY.DOCKET NO	DRAWINGS	TOT CLMS	IND CLMS
10/858,497	06/01/2004	3677	1426	0275M-000753	4	27	3

CONFIRMATION NO. 3781

CORRECTED FILING RECEIPT

OC000000020291995

27572
HARNESS, DICKEY & PIERCE, P.L.C.
P.O. BOX 828
BLOOMFIELD HILLS, MI 48303

Date Mailed: 09/05/2006

Receipt is acknowledged of this regular Patent Application. It will be considered in its order and you will be notified as to the results of the examination. Be sure to provide the U.S. APPLICATION NUMBER, FILING DATE, NAME OF APPLICANT, and TITLE OF INVENTION when inquiring about this application. Fees transmitted by check or draft are subject to collection. Please verify the accuracy of the data presented on this receipt. **If an error is noted on this Filing Receipt, please mail to the Commissioner for Patents P.O. Box 1450 Alexandria Va 22313-1450. Please provide a copy of this Filing Receipt with the changes noted thereon. If you received a "Notice to File Missing Parts" for this application, please submit any corrections to this Filing Receipt with your reply to the Notice. When the USPTO processes the reply to the Notice, the USPTO will generate another Filing Receipt incorporating the requested corrections (if appropriate).**

Applicant(s)

Rosalind Nessel, Birmingham, MI;
Steven M. Benedetti, Sterling Heights, MI;

Power of Attorney:

Edward Murphy--20625
John Del Ponti--24258
Christopher Brock--27313
Charles Yocum--30121
Bruce Shapiro--33120
Richard Veltman--36957
Adan Ayala--38373
Michael Leary--41144
Christopher Eusebi--44672
Paul Ratcliffe--45290

Domestic Priority data as claimed by applicant

This appln claims benefit of 60/476,745 06/06/2003
and is a CIP of 10/829,103 04/21/2004
which claims benefit of 60/469,438 05/09/2003
This application 10/858,497
is a CIP of 10/842,355 05/10/2004
which claims benefit of 60/474,833 05/30/2003

Foreign Applications

If Required, Foreign Filing License Granted: 07/28/2004

The country code and number of your priority application, to be used for filing abroad under the Paris Convention, is
US10/858,497

Projected Publication Date: Not Applicable

Non-Publication Request: No

Early Publication Request: No

Title

Sill plate retainer

Preliminary Class

024

PROTECTING YOUR INVENTION OUTSIDE THE UNITED STATES

Since the rights granted by a U.S. patent extend only throughout the territory of the United States and have no effect in a foreign country, an inventor who wishes patent protection in another country must apply for a patent in a specific country or in regional patent offices. Applicants may wish to consider the filing of an international application under the Patent Cooperation Treaty (PCT). An international (PCT) application generally has the same effect as a regular national patent application in each PCT-member country. The PCT process **simplifies** the filing of patent applications on the same invention in member countries, but **does not result** in a grant of "an international patent" and does not eliminate the need of applicants to file additional documents and fees in countries where patent protection is desired.

Almost every country has its own patent law, and a person desiring a patent in a particular country must make an application for patent in that country in accordance with its particular laws. Since the laws of many countries differ in various respects from the patent law of the United States, applicants are advised to seek guidance from specific foreign countries to ensure that patent rights are not lost prematurely.

Applicants also are advised that in the case of inventions made in the United States, the Director of the USPTO must issue a license before applicants can apply for a patent in a foreign country. The filing of a U.S. patent application serves as a request for a foreign filing license. The application's filing receipt contains further information and guidance as to the status of applicant's license for foreign filing.

Applicants may wish to consult the USPTO booklet, "General Information Concerning Patents" (specifically, the section entitled "Treaties and Foreign Patents") for more information on timeframes and deadlines for filing foreign patent applications. The guide is available either by contacting the USPTO Contact Center at 800-786-9199, or it can be viewed on the USPTO website at http://www.uspto.gov/web/offices/pac/doc/general/index.html.

For information on preventing theft of your intellectual property (patents, trademarks and copyrights), you may wish to consult the U.S. Government website, http://www.stopfakes.gov. Part of a Department of Commerce initiative, this website includes self-help "toolkits" giving innovators guidance on how to protect intellectual property in specific countries such as China, Korea and Mexico. For questions regarding patent enforcement issues, applicants may call the U.S. Government hotline at 1-866-999-HALT (1-866-999-4158).

LICENSE FOR FOREIGN FILING UNDER
Title 35, United States Code, Section 184
Title 37, Code of Federal Regulations, 5.11 & 5.15

GRANTED

The applicant has been granted a license under 35 U.S.C. 184, if the phrase "IF REQUIRED, FOREIGN FILING LICENSE GRANTED" followed by a date appears on this form. Such licenses are issued in all applications where the conditions for issuance of a license have been met, regardless of whether or not a license may be required as set forth in 37 CFR 5.15. The scope and limitations of this license are set forth in 37 CFR 5.15(a) unless an earlier license has been issued under 37 CFR 5.15 (b). The license is subject to revocation upon written notification. The date indicated is the effective date of the license, unless an earlier license of similar scope has been granted under 37 CFR 5.13 or 5.14.

This license is to be retained by the licensee and may be used at any time on or after the effective date thereof unless it is revoked. This license is automatically transferred to any related applications(s) filed under 37 CFR 1.53(d). This license is not retroactive.

The grant of a license does not in any way lessen the responsibility of a licensee for the security of the subject matter as imposed by any Government contract or the provisions of existing laws relating to espionage and the national security or the export of technical data. Licensees should apprise themselves of current regulations especially with respect to certain countries, of other

agencies, particularly the Office of Defense Trade Controls, Department of State (with respect to Arms, Munitions and Implements of War (22 CFR 121-128)); the Bureau of Industry and Security, Department of Commerce (15 CFR parts 730-774); the Office of Foreign Assets Control, Department of Treasury (31 CFR Parts 500+) and the Department of Energy.

NOT GRANTED

No license under 35 U.S.C. 184 has been granted at this time, if the phrase "IF REQUIRED, FOREIGN FILING LICENSE GRANTED" DOES NOT appear on this form. Applicant may still petition for a license under 37 CFR 5.12, if a license is desired before the expiration of 6 months from the filing date of the application. If 6 months has lapsed from the filing date of this application and the licensee has not received any indication of a secrecy order under 35 U.S.C. 181, the licensee may foreign file the application pursuant to 37 CFR 5.15(b).

UNITED STATES PATENT AND TRADEMARK OFFICE

Commissioner for Patents
United States Patent and Trademark Office
P.O. Box 1450
Alexandria, VA 22313-1450
www.uspto.gov

COPY MAILED

SEP 28 2006

OFFICE OF PETITIONS

ISIS PHARMACEUTICALS, INC
1896 RUTHERFORD ROAD
CARLBAD, CA 92008

In re Application of	:	
Rosanne M. Crooke	:	
Application No. 10/858,500	:	DECISION ON PETITION
Filed: June 1, 2004	:	TO WITHDRAW
Attorney Docket No. BIOL0014US	:	FROM RECORD
	:	

This is a decision on the Request to Withdraw as attorney or agent of record under 37 C.F.R. § 1.36(b), filed October 20, 2005.

The request is **NOT APPROVED** as moot.

A review of the file record indicates that the power of attorney to Paul K. Legaard and those practitioners have been revoked by the assignee of the patent application on June 9, 2006. Accordingly, the request to withdraw under 37 C.F.R. § 1.36(b) is moot.

All future communications from the Office will continue to be directed to the below-listed address until otherwise notified by applicant.

Telephone inquires concerning this decision should be directed to Charles Smoot at 571-272- 3299.

David Bucci
Petitions Examiner
Office of Petitions

cc: Knobbe Martens Olson & Bear
550 West C Street, Suite 1200
San Diego, CA 92101

UNITED STATES PATENT AND TRADEMARK OFFICE

Commissioner for Patents
United States Patent and Trademark Office
P.O. Box 1450
Alexandria, VA 22313-1450
www.uspto.gov

Paper No.

ISIS PHARMACEUTICALS INC
1896 RUTHERFORD RD.
CARLSBAD CA 92008

COPY MAILED

AUG 03 2009

OFFICE OF PETITIONS

In re Patent No. 7,425,545	:	
Crooke et al.	:	DECISION DISMISSING
Application No. 10/858500	:	REQUEST FOR
Issue Date:September 16, 2008	:	RECONSIDERATION OF
Filed: June 1, 2004	:	PATENT TERM ADJUSTMENT
Attorney Docket No. ELN-002	:	UNDER 37 CFR 1.705(d)

This is a decision on the "REQUEST FOR RECONSIDERATION OF PATENT TERM ADJUSTMENT UNDER 37 CFR §1.705(d)," filed November 17, 2008, requesting that the patent term adjustment determination for the above-identified patent be changed from six hundred sixty-four (664) days to nine hundred eighty-four (984) days.

The request for reconsideration is granted to the extent that the determination has been reconsidered; however, the request for reconsideration of patent term adjustment is **DISMISSED** with respect to Patentee's request for an additional 320 days of patent term adjustment determination under 35 U.S.C. § 154(b).

BACKGROUND

On September 16, 2008, the application matured into U.S. Patent No. 7,425,545, with a revised patent term adjustment of 664 days. On November 17, 2008, patentees timely submitted this request for reconsideration of patent term adjustment (with required fee), asserting that the correct number of days of Patent Term Adjustment is 984 days.

STATUTE AND REGULATION

35 U.S.C. § 154(b) as amended by § 4402 of the American Inventors Protection Act of 1999[1] (AIPA) provides that:

> ADJUSTMENT OF PATENT TERM. –
>
> (1) PATENT TERM GUARANTEES. –
>
> (A) GUARANTEE OF PROMPT PATENT AND TRADEMARK OFFICE RESPONSES. – Subject to the limitations under paragraph (2), if the issue of an original patent is delayed due to the failure of the Patent and Trademark Office to –
>
> (i) provide at least one of the notifications under section 132 of this title or a notice of allowance under section 151 of this title not later than 14 months after –
>
> (I) the date on which an application was filed under section 111(a) of this title; or
>
> (II) the date on which an international application fulfilled the requirements of section 371 of this title;
>
> (ii) respond to a reply under section 132, or to an appeal taken under section 134, within 4 months after the date on which the reply was filed or the appeal was taken;
>
> (iii) act on an application within 4 months after the date of a decision by the Board of Patent Appeals and Interferences under section 134 or 135 or a decision by a Federal court under section 141, 145, or 146 in a case in which allowable claims remain in the application; or
>
> (iv) issue a patent within 4 months after the date on which the issue fee was paid under section 151 and all outstanding requirements were satisfied, the term of the patent shall be extended 1 day for each day after the end of the period specified in clause (i), (ii), (iii), or (iv), as the case may be, until the action described in such clause is taken.
>
> (B) GUARANTEE OF NO MORE THAN 3-YEAR APPLICATION PENDENCY. – Subject to the limitations under paragraph (2), if the issue of an original patent is delayed due to the failure of the United States Patent and Trademark Office to issue a patent within 3 years after the actual filing date of the application in the United States, not including –

[1] Public Law 106-113, 113 Stat. 1501, 1501A-557 through 1501A-560 (1999).

(i) any time consumed by continued examination of the application requested by the applicant under section 132(b);

(ii) any time consumed by a proceeding under section 135(a), any time consumed by the imposition of an order under section 181, or any time consumed by appellate review by the Board of Patent Appeals and Interferences or by a Federal court; or

(iii) any delay in the processing of the application by the United States Patent and Trademark Office requested by the applicant except as permitted by paragraph (3)(C), the term of the patent shall be extended 1 day for each day after the end of that 3-year period until the patent is issued.

(C) GUARANTEE OR ADJUSTMENTS FOR DELAYS DUE TO INTERFERENCES, SECRECY ORDERS, AND APPEALS. — Subject to the limitations under paragraph (2), if the issue of an original patent is delayed due to —

(i) a proceeding under section 135(a);

(ii) the imposition of an order under section 181; or

(iii) appellate review by the Board of Patent Appeals and Interferences or by a Federal court in a case in which the patent was issued under a decision in the review reversing an adverse determination of patentability, the term of the patent shall be extended 1 day for each day of the pendency of the proceeding, order, or review, as the case may be.

(2) LIMITATIONS. —

(A) IN GENERAL. — To the extent that periods of delay attributable to grounds specified in paragraph (1) overlap, the period of any adjustment granted under this subsection shall not exceed the actual number of days the issuance of the patent was delayed.

The implementing regulation, **37 CFR § 1.702**, provides grounds for adjustment of patent term due to examination delay under the Patent Term Guarantee Act of 1999 (original applications, other than designs, filed on or after May 29, 2000).

(a) Failure to take certain actions within specified time frames. Subject to the provisions of 35 U.S.C. 154(b) and this subpart, the term of an original patent shall be adjusted if the issuance of the patent was delayed due to the failure of the Office to:

(1) Mail at least one of a notification under 35 U.S.C. 132 or a notice of allowance under 35 U.S.C. 151 not later than fourteen months after the date on which the application was filed under 35 U.S.C. 111(a) or fulfilled the requirements of 35 U.S.C. 371 in an international application;

(2) Respond to a reply under 35 U.S.C. 132 or to an appeal taken under 35 U.S.C. 134 not later than four months after the date on which the reply was filed or the appeal was taken;

(3) Act on an application not later than four months after the date of a decision by the Board of Patent Appeals and Interferences under 35 U.S.C. 134 or 135 or a decision by a Federal court under 35 U.S.C. 141, 145, or 146 where at least one allowable claim remains in the application; or

(4) Issue a patent not later than four months after the date on which the issue fee was paid under 35 U.S.C. 151 and all outstanding requirements were satisfied.

(b) Failure to issue a patent within three years of the actual filing date of the application. Subject to the provisions of 35 U.S.C. 154(b) and this subpart, the term of an original patent shall be adjusted if the issuance of the patent was delayed due to the failure of the Office to issue a patent within three years after the date on which the application was filed under 35 U.S.C. 111(a) or the national stage commenced under 35 U.S.C. 371(b) or (f) in an international application, but not including[2]:

In pertinent part, 37 CFR § 1.703 provides for calculation of the periods, as follows:

---

[2] (1) Any time consumed by continued examination of the application under 35 U.S.C. 132(b);

(2) Any time consumed by an interference proceeding under 35 U.S.C. 135(a);

(3) Any time consumed by the imposition of a secrecy order under 35 U.S.C. 181;

(4) Any time consumed by review by the Board of Patent Appeals and Interferences or a Federal court; or

(5) Any delay in the processing of the application by the Office that was requested by the applicant.

Period of adjustment of patent term due to examination delay.

(a) The period of adjustment under § 1.702(a) is the sum of the following periods:

(1) The number of days, if any, in the period beginning on the day after the date that is fourteen months after the date on which the application was filed under 35 U.S.C. 111(a) or fulfilled the requirements of 35 U.S.C. 371 and ending on the date of mailing of either an action under 35 U.S.C. 132, or a notice of allowance under 35 U.S.C. 151, whichever occurs first;

(2) The number of days, if any, in the period beginning on the day after the date that is four months after the date a reply under § 1.111 was filed and ending on the date of mailing of either an action under 35 U.S.C. 132, or a notice of allowance under 35 U.S.C. 151, whichever occurs first;

(3) The number of days, if any, in the period beginning on the day after the date that is four months after the date a reply in compliance with § 1.113(c) was filed and ending on the date of mailing of either an action under 35 U.S.C. 132, or a notice of allowance under 35 U.S.C. 151, whichever occurs first;

(4) The number of days, if any, in the period beginning on the day after the date that is four months after the date an appeal brief in compliance with § 41.37 of this title was filed and ending on the date of mailing of any of an examiner's answer under § 41.39 of this title, an action under 35 U.S.C. 132, or a notice of allowance under 35 U.S.C. 151, whichever occurs first;

(5) The number of days, if any, in the period beginning on the day after the date that is four months after the date of a final decision by the Board of Patent Appeals and Interferences or by a Federal court in an appeal under 35 U.S.C. 141 or a civil action under 35 U.S.C. 145 or 146 where at least one allowable claim remains in the application and ending on the date of mailing of either an action under 35 U.S.C. 132 or a notice of allowance under 35 U.S.C. 151, whichever occurs first; and

(6) The number of days, if any, in the period beginning on the day after the date that is four months after the date the issue fee was paid and all outstanding requirements were satisfied and ending on the date a patent was issued.

(b) The period of adjustment under § 1.702(b) is the number of days, if any, in the period beginning on the day after the date that is three years after the date on which the application was filed under 35 U.S.C. 111(a) or the national stage commenced under 35 U.S.C. 371(b) or (f) in an international application and ending on the date a patent was issued, but not including the sum of the following periods[3]:

37 CFR 1.703(f) provides that:

The adjustment will run from the expiration date of the patent as set forth in 35 U.S.C. 154(a)(2). To the extent that periods of delay attributable to the grounds specified in §1.702 overlap, the period of adjustment granted under this section shall not exceed the actual number of days the issuance of the patent was delayed. The term of a patent entitled to adjustment under § 1.702 and this section shall be adjusted for the sum of the periods calculated under paragraphs (a) through (e) of this section, to the extent that such periods are not overlapping, less the sum of the periods calculated under § 1.704. The date indicated on any certificate of mailing or transmission under § 1.8 shall not be taken into account in this calculation.

---

[3] (1) The number of days, if any, in the period beginning on the date on which a request for continued examination of the application under 35 U.S.C. 132(b) was filed and ending on the date the patent was issued;

(2)(i) The number of days, if any, in the period beginning on the date an interference was declared or redeclared to involve the application in the interference and ending on the date that the interference was terminated with respect to the application; and (ii) The number of days, if any, in the period beginning on the date prosecution in the application was suspended by the Office due to interference proceedings under 35 U.S.C. 135(a) not involving the application and ending on the date of the termination of the suspension;

(3)(i) The number of days, if any, the application was maintained in a sealed condition under 35 U.S.C. 181; (ii) The number of days, if any, in the period beginning on the date of mailing of an examiner's answer under § 41.39 of this title in the application under secrecy order and ending on the date the secrecy order was removed; (iii) The number of days, if any, in the period beginning on the date applicant was notified that an interference would be declared but for the secrecy order and ending on the date the secrecy order was removed; and (iv) The number of days, if any, in the period beginning on the date of notification under § 5.3(c) of this chapter and ending on the date of mailing of the notice of allowance under 35 U.S.C. 151; and,

(4) The number of days, if any, in the period beginning on the date on which a notice of appeal to the Board of Patent Appeals and Interferences was filed under 35 U.S.C. 134 and § 41.31 of this title and ending on the date of the last decision by the Board of Patent Appeals and Interferences or by a Federal court in an appeal under 35 U.S.C. 141 or a civil action under 35 U.S.C. 145, or on the date of mailing of either an action under 35 U.S.C. 132, or a notice of allowance under 35 U.S.C. 151, whichever occurs first, if the appeal did not result in a decision by the Board of Patent Appeals and Interferences.

OPINION

The application matured into U.S. patent No. 7,425,545, on September 16, 2008, with a revised patent term adjustment of six hundred sixty-four (664) days. Patentees argue that the Office has not properly accounted for the delay according to 35 U.S.C. section 154(b)(1)(B).

Specifically, citing *Wyeth v. Dudas*, patentees maintain that the Office has not correctly interpreted the "overlap" provision of 35 USC 154(b)(2)(A). Patentees argue for an additional period of delay under § 154(b)(1)(B) from the day after the date that is three years after filing the application (June 2, 2007) and ending on the date that the application matured into U.S. patent No. 7,425,545, (September 16, 2008), or 473 days, said period to include 152 days of adjustment under 37 CFR 1.702(a)(4), for failing to issue a patent not later than four months after the date on which the issue fee was paid under 35 U.S.C. 151 and all outstanding requirements were satisfied.

Patentees do not contest the period of Office delay of 528 days, and 152 days under 37 CFR 1.702(a)(1) and (4) respectively, or the period of Applicant delay of 16 days under 37 CFR 1.704(b).

The sum of the non-overlapping delays as calculated by Patentees, therefore, is 528 + 472[4] = 1000 days.

The Office does not agree that patentees should accrue an additional period of delay under § 154(b)(1)(B) of 320 days. At issue is whether patentees should accrue 320 days of patent term adjustment under § 154(b)(1)(B).

Initially it is noted that pursuant to 35 U.S.C. 154(B)(i), § 1.703(b)(1) provides, in pertinent part that:

the period of adjustment under § 1.702(b) is the number of days, if any, in the period beginning on the day after the date that is three years after the date on which the application was filed under 35 U.S.C. 111(a) … and ending on the date a patent was issued, but not including the sum of the following periods:

---

[4] The correct period of adjustment <u>calculation</u> beginning on the day after the date that is three years after filing the application (June 2, 2007) and ending on the date that the application matured into U.S. patent No. 7,425,545, (September 16, 2008), is 473 days. (Emphasis supplied).

term adjustment under 35 U.S.C. 154(b)(1)(A)(i)-(iv), or patent term adjustment under 35 U.S.C. 154(b)(1)(B), but not as permitting patent term adjustment under both 35 U.S.C. 154(b)(1)(A)(i)-(iv) and 154(b)(1)(B). Accordingly, the Office implements the overlap provision as follows:

> If an application is entitled to an adjustment under 35 U.S.C. 154(b)(1)(B), the entire period during which the application was pending (except for periods excluded under 35 U.S.C. 154(b)(1)(B)(i)-(iii)), and not just the period beginning three years after the actual filing date of the application, is the period of delay under 35 U.S.C. 154(b)(1)(B) in determining whether periods of delay overlap under 35 U.S.C. 154(b)(2)(A). Thus, any days of delay for Office issuance of the patent more than 3 years after the filing date of the application, which overlap with the days of patent term adjustment accorded prior to the issuance of the patent will not result in any additional patent term adjustment. See 35 U.S.C. 154(b)(1)(B), 35 U.S.C. 154(b)(2)(A), and 37 CFR § 1.703(f). See *Changes to Implement Patent Term Adjustment Under Twenty Year Term; Final Rule*, 65 Fed. Reg. 54366 (Sept. 18, 2000). See also *Revision of Patent Term Extension and Patent Term Adjustment Provisions; Final Rule*, 69 Fed. Reg. 21704 (April 22, 2004), 1282 Off. Gaz. Pat. Office 100 (May 18, 2004). See also *Explanation of 37 CFR 1.703(f) and of the United States Patent and Trademark Office Interpretation of 35 U.S.C. 154(b)(2)(A)*, 69 Fed. Reg. 34283 (June 21, 2004).

The current wording of § 1.703(f) was revised in response to the misinterpretation of this provision by a number of applicants. The rule was slightly revised to more closely track the corresponding language of 35 U.S.C. 154(b)(2)(A). The relevant portion differs only to the extent that the statute refers back to provisions of the statute whereas the rule refers back to sections of the rule. This was not a substantive change to the rule nor did it reflect a change of the Office's interpretation of 35 U.S.C. 154(b)(2)(A). As stated in the *Explanation of 37 CFR 1.703(f) and of the United States Patent and Trademark Office Interpretation of 35 U.S.C. 154(b)(2)(A)*, the Office has consistently taken the position that if an application is entitled to an adjustment under the three-year pendency provision of 35 U.S.C. 154(b)(1)(B), the entire period during which the application was pending before the Office (except for

periods excluded under 35 U.S.C. 154(b)(1)(B)(i)-(iii)), and not just the period beginning three years after the actual filing date of the application, is the relevant period under 35 U.S.C. 154(b)(1)(B) in determining whether periods of delay "overlap" under 35 U.S.C. 154(b)(2)(A).

This interpretation is consistent with the statute. Taken together the statute and rule provide that to the extent that periods of delay attributable to grounds specified in 35 U.S.C. 154(b)(1) and in corresponding §1.702 overlap, the period of adjustment granted shall not exceed the actual number of days the issuance of the patent was delayed. The grounds specified in these sections cover the A) guarantee of prompt Patent and Trademark Office responses, B) guarantee of no more than 3 year application pendency, and C) guarantee or adjustments for delays due to interference, secrecy orders and appeals. A section by section analysis of 35 U.S.C. 154(b)(2)(A) specifically provides that:

> Section 4402 imposes limitations on restoration of term. In general, pursuant to [35 U.S.C.] 154(b)(2)(A)-(C), total adjustments granted for restorations under [35 U.S.C. 154](b)(1) are reduced as follows: (1) To the extent that there are multiple grounds for extending the term of a patent that may exist simultaneously (e.g., delay due to a secrecy order under [35 U.S.C.] 181 and administrative delay under [35 U.S.C.] 154(b)(1)(A)), the term should not be extended for each ground of delay but only for the actual number of days that the issuance of a patent was delayed; See 145 Cong. Rec. S14,718[5]

As such, the period for over 3 year pendency does not as argued by patentees overlap only to the extent that the actual dates in the period beginning three years after the date on which the application was filed overlap with the actual dates in the periods for failure of the Office to take action within specified time frames. In other words, consideration of the overlap does not begin three years after the filing date of the application. Patentees are incorrect in treating the relevant

---

[5] The AIPA is title IV of the Intellectual Property and Communications Omnibus Reform Act of 1999 (S. 1948), which was incorporated and enacted as law as part of Pub. L. 106-113. The Conference Report for H.R. 3194, 106th Cong. 1st Sess. (1999), which resulted in Pub. L. 106-113, does not contain any discussion (other than the incorporated language) of S. 1948. A section-by-section analysis of S. 1948, however, was printed in the Congressional Record at the request of Senator Lott, See 145 Cong. Rec. S14,708-26 (1999)(daily ed. Nov. 17, 1999).

period as starting on June 2, 2007, the day after the date that is 3 years after the actual filing date of the application.

In this instance, the relevant period under 35 U.S.C. 154(b)(1)(B) in determining whether periods of delay "overlap" under 35 U.S.C. 154(b)(2)(A) is the entire period during which the application was pending before the Office, June 1, 2004, and ending on the date that the Request for Continued Examination ("RCE") was filed, (August 10, 2007), or 70 days. (There were no periods excluded under 35 U.S.C. 154(b)(1)(B)(i)-(iii)). 680 days of patent term adjustment were accorded prior to the issuance of the patent for the Office failing to respond within specified time frames during the pendency of the application. All of these 680 days overlap with the 70 of patent term adjustment under 37 CFR 1.702(b). Accordingly, at issuance, the Office properly entered 664 days (528 + 152 - 16 days) additional days of patent term adjustment for the Office taking in excess of 3 years to issue the patent.

In view thereof, the Office affirms that the correct revised determination of patent term adjustment at the time of the issuance of the patent is 664 days.

CONCLUSION

The request for reconsideration of the revised patent term adjustment is dismissed.

The Office acknowledges that patentees submission of the $200 fee set forth in §1.18(e). As this request pertains only to the over 3-year delay issue raised in the application for patent term adjustment, no additional fees are required.

Telephone inquiries specific to this matter should be directed to Attorney Derek Woods, at (571) 272-3232.

Nancy Johnson
Senior Petitions Attorney
Office of Petitions

UNITED STATES PATENT AND TRADEMARK OFFICE

Commissioner for Patents
United States Patent and Trademark Office
P.O. Box 1450
Alexandria, VA 22313-1450
www.uspto.gov

MCI, INC
TECHNOLOGY LAW DEPARTMENT
1133 19TH STREET NW, 10TH FLOOR
WASHINGTON DC 20036

COPY MAILED

NOV 17 2004

OFFICE OF PETITIONS

In re Application of	:
Nick Delregno et al.	:
Application No. 10/858,501	: DECISION ACCORDING STATUS
Filed: June 1, 2004	: UNDER 37 CFR 1.47(a)
Attorney Docket No. RIC04006	:

This is in response to the petition filed October 26, 2004 under 37 CFR 1.47(a).

The petition is **GRANTED**.

The above-identified application was filed on June 1, 2004, naming Nick Delregno, Scott R. Kotrla, David E. McDysan, Michael U. Bencheck, Matthew W. Turlington, Ross S. Hardin, Richard C. Schell, Howard Chiu, Lee D. Bengston and William Drake as joint inventors but without a signed declaration. Accordingly, on July 29, 2004, a "Notice To File Missing Parts of Application" was mailed, requiring *inter alia* a properly executed oath or declaration.

In response, on October 26, 2004, an oath or declaration executed by joint inventors Delregno, Kotrla, McDysan, Bencheck, Turlington, Hardin, Schell, Chiu and Bengston and, a petition under 37 CFR 1.47(a) and a request for a one month extension f time was filed. The petition argues that joint inventor Drake refuses to sign the oath or declaration and thus by his actions, to cooperate with the filing of the instant application.

A grantable petition under 37 CFR 1.47(a) requires: (1) proof that the non-signing inventor cannot be reached or refuses to sign the oath or declaration after having been presented with the application papers (specification, claims and drawings); (2) an acceptable oath or declaration in compliance with 35 U.S.C. §§ 115 and 116; (3) the petition fee; and (4) a statement of the last known address of the non-signing inventor.

The petition bears proof that the application papers were sent to Mr. Drake and that in spite of a telephone conversation between Mr. Drake and the attorney of record, as well as subsequent correspondences to Mr. Drake, he has failed to return an executed oath or declaration.

The above-identified application and papers have been reviewed and found in compliance with 37 CFR 1.47(a). In view thereof, this application is hereby accorded Rule 1.47(a) status.

Thus, as provided in Rule 1.47c, this Office will forward notice of this application's filing to the non-signing inventor at the address given in the petition. Notice of the filing of this application will also be published in the Official Gazette.

The application is being forwarded to Technology Center 2661 for examination in due course.

Telephone inquiries concerning this matter may be directed to the undersigned Petitions Attorney at (571) 272-3212.

Patricia Faison Ball

Patricia Faison-Ball
Senior Petitions Attorney
Office of Petitions

UNITED STATES PATENT AND TRADEMARK OFFICE

Commissioner for Patents
United States Patent and Trademark Office
P.O. Box 1450
Alexandria, VA 22313-1450
www.uspto.gov

COPY MAILED

NOV 17 2004

OFFICE OF PETITIONS

WILLIAM DRAKE
2866 BELTLINE ROAD, APT #377
GARLAND, TX 75044

In re Application of
Nick Delregno et al.
Application No. 10/858,501
Filed: June 1, 2004
For: SYSTEM AND METHOD FOR CONTROLLING COMMUNICATION FLOW RATES

Dear Mr. Drake:

You are named as a joint inventor in the above identified United States patent application, filed under the provisions of 35 U.S.C. 116 (United States Code), and 37 CFR 1.47(a), Rules of Practice in Patent Cases. Should a patent be granted on the application you will be designated therein as a joint inventor.

As a named inventor you are entitled to inspect any paper in the file wrapper of the application, order copies of all or any part thereof (at a prepaid cost per 37 CFR 1.19) or make your position of record in the application. Alternatively, you may arrange to do any of the preceding through a registered patent attorney or agent presenting written authorization from you. If you care to join the application, counsel of record (see below) would presumably assist you. Joining in the application would entail the filing of an appropriate oath or declaration by you pursuant to 37 CFR 1.63.

Telephone inquiries regarding this communication should be directed to the undersigned Petitions Attorney at (571) 272-3212. Requests for information regarding your application should be directed to the File Information Unit at 703/308-2733. Information regarding how to pay for and order a copy of the application, or a specific paper in the application, should be directed to Certification Division at 703/308-9726 or 1-800-972-6382 (outside the Washington D.C. area).

Patricia Faison-Ball

Patricia Faison-Ball
Senior Petitions Attorney
Office of Petitions

cc:
MCI, INC
TECHNOLOGY LAW DEPARTMENT
1133 19TH STREET NW, 10TH FLOOR
WASHINGTON DC 20036

UNITED STATES PATENT AND TRADEMARK OFFICE

Commissioner for Patents
United States Patent and Trademark Office
P.O. Box 1450
Alexandria, VA 22313-1450
www.uspto.gov

VERIZON PATENT MANAGEMENT GROUP
1320 NORTH COURT HOUSE ROAD
9TH FLOOR
ARLINGTON VA 22201-2909

MAILED

MAY 0 1 2009

OFFICE OF PETITIONS

In re Application of	:	
Nick Delregno et al	:	
Application No. 10/858,501	:	DECISION GRANTING PETITION
Filed: June 1, 2004	:	UNDER 37 CFR 1.313(c)(2)
Attorney Docket No. RIC04006	:	

This is a decision on the petition under 37 CFR 1.313(c)(2), filed April 30, 2009, to withdraw the above-identified application from issue after payment of the issue fee.

The petition is **GRANTED**.

The above-identified application is withdrawn from issue for consideration of a submission under 37 CFR 1.114 (request for continued examination). *See* 37 CFR 1.313(c)(2).

Petitioner is advised that the issue fee paid on April 2, 2009 cannot be refunded. If, however, this application is again allowed, petitioner may request that it be applied towards the issue fee required by the new Notice of Allowance.[1]

Telephone inquiries should be directed to the undersigned at (571) 272-3208.

This application is being referred to Technology Center AU 2416 for processing of the request for continued examination under 37 CFR 1.114 and for consideration of the concurrently filed IDS.

/Karen Creasy/
Karen Creasy
Petitions Examiner
Office of Petitions

---

[1] *The request to apply the issue fee to the new Notice may be satisfied by completing and returning the new Part B – Fee(s) Transmittal Form (along with any balance due at the time of submission). Petitioner is advised that the Issue Fee Transmittal Form* ***must*** *be completed and timely submitted to avoid abandonment of the application.*

UNITED STATES PATENT AND TRADEMARK OFFICE

Commissioner for Patents
United States Patent and Trademark Office
P.O. Box 1450
Alexandria, VA 22313-1450
www.uspto.gov

MCI, INC
TECHNOLOGY LAW DEPARTMENT
1133 19TH STREET NW, 10TH FLOOR
WASHINGTON DC 20036

COPY MAILED

NOV 04 2004

OFFICE OF PETITIONS

In re Application of
Nick Delregno et al.
Application No. 10/858,502
Filed: June 1, 2004
Attorney Docket No. RIC04005

: DECISION ACCORDING STATUS
: UNDER 37 CFR 1.47(a)

This is in response to the petition filed October 26, 2004 under 37 CFR 1.47(a).

The petition is **GRANTED**.

The above-identified application was filed on June 1, 2004, naming Nick Delregno, Scott R. Kotrla, David E. McDysan, Michael U. Bencheck, Matthew W. Turlington, Ross S. Hardin, Richard C. Schell, Howard Chiu, Lee D. Bengston and William Drake as joint inventors but without a signed declaration. Accordingly, on July 29, 2004, a "Notice To File Missing Parts of Application" was mailed, requiring *inter alia* a properly executed oath or declaration.

In response, on October 26, 2004, an oath or declaration executed by joint inventors Delregno, Kotrla, McDysan, Bencheck, Turlington, Hardin, Schell, Chiu and Bengston and, a petition under 37 CFR 1.47(a) and a request for a one month extension f time was filed. The petition argues that joint inventor Drake refuses to sign the oath or declaration and thus by his actions, to cooperate with the filing of the instant application.

A grantable petition under 37 CFR 1.47(a) requires: (1) proof that the non-signing inventor cannot be reached or refuses to sign the oath or declaration after having been presented with the application papers (specification, claims and drawings); (2) an acceptable oath or declaration in compliance with 35 U.S.C. §§ 115 and 116; (3) the petition fee; and (4) a statement of the last known address of the non-signing inventor.

The petition bears proof that the application papers were sent to Mr. Drake and that in spite of a telephone conversation between Mr. Drake and the attorney of record, as well as subsequent correspondences to Mr. Drake, he has failed to return an executed oath or declaration.

The above-identified application and papers have been reviewed and found in compliance with 37 CFR 1.47(a). In view thereof, this application is hereby accorded Rule 1.47(a) status.

Thus, as provided in Rule 1.47c, this Office will forward notice of this application's filing to the non-signing inventor at the address given in the petition. Notice of the filing of this application will also be published in the Official Gazette.

The application is being forwarded to Technology Center 2661 for examination in due course.

Telephone inquiries concerning this matter may be directed to the undersigned Petitions Attorney at (571) 272-3212.

Patricia Faison-Ball

Patricia Faison-Ball
Senior Petitions Attorney
Office of Petitions

UNITED STATES PATENT AND TRADEMARK OFFICE

Commissioner for Patents
United States Patent and Trademark Office
P.O. Box 1450
Alexandria, VA 22313-1450
www.uspto.gov

MCI, INC
TECHNOLOGY LAW DEPARTMENT
1133 19TH STREET NW, 10TH FLOOR
WASHINGTON DC 20036

COPY MAILED

NOV 17 2004

OFFICE OF PETITIONS

In re Application of	:
Nick Delregno et al.	:
Application No. 10/858,503	: DECISION ACCORDING STATUS
Filed: June 1, 2004	: UNDER 37 CFR 1.47(a)
Attorney Docket No. RIC04010	:

This is in response to the petition filed October 26, 2004 under 37 CFR 1.47(a).

The petition is **GRANTED**.

The above-identified application was filed on June 1, 2004, naming Nick Delregno, Scott R. Kotrla, David E. McDysan, Michael U. Bencheck, Matthew W. Turlington, Ross S. Hardin, Richard C. Schell, Howard Chiu, Lee D. Bengston and William Drake as joint inventors but without a signed declaration. Accordingly, on August 5, 2004, a "Notice To File Missing Parts of Application" was mailed, requiring *inter alia* a properly executed oath or declaration.

In response, on October 26, 2004, an oath or declaration executed by joint inventors Delregno, Kotrla, McDysan, Bencheck, Turlington, Hardin, Schell, Chiu and Bengston and, a petition under 37 CFR 1.47(a) and a request for a one month extension f time was filed. The petition argues that joint inventor Drake refuses to sign the oath or declaration and thus by his actions, to cooperate with the filing of the instant application.

A grantable petition under 37 CFR 1.47(a) requires: (1) proof that the non-signing inventor cannot be reached or refuses to sign the oath or declaration after having been presented with the application papers (specification, claims and drawings); (2) an acceptable oath or declaration in compliance with 35 U.S.C. §§ 115 and 116; (3) the petition fee; and (4) a statement of the last known address of the non-signing inventor.

The petition bears proof that the application papers were sent to Mr. Drake and that in spite of a telephone conversation between Mr. Drake and the attorney of record, as well as subsequent correspondences to Mr. Drake, he has failed to return an executed oath or declaration.

The above-identified application and papers have been reviewed and found in compliance with 37 CFR 1.47(a). In view thereof, this application is hereby accorded Rule 1.47(a) status.

Thus, as provided in Rule 1.47c, this Office will forward notice of this application's filing to the non-signing inventor at the address given in the petition. Notice of the filing of this application will also be published in the Official Gazette.

The application is being forwarded to Technology Center 2661 for examination in due course.

Telephone inquiries concerning this matter may be directed to the undersigned Petitions Attorney at (571) 272-3212.

Patricia Faison-Ball

Patricia Faison-Ball
Senior Petitions Attorney
Office of Petitions

UNITED STATES PATENT AND TRADEMARK OFFICE

Commissioner for Patents
United States Patent and Trademark Office
P.O. Box 1450
Alexandria, VA 22313-1450
www.uspto.gov

COPY MAILED

NOV 17 2004

OFFICE OF PETITIONS

WILLIAM DRAKE
2866 BELTLINE ROAD, APT #377
GARLAND, TX 75044

In re Application of
Nick Delregno et al.
Application No. 10/858,503
Filed: June 1, 2004
For: METHOD AND APPRARATUS FOR PROCESSING LABELED FLOWS IN A COMMUNICATIONS ACCESS NETWORK

Dear Mr. Drake:

You are named as a joint inventor in the above identified United States patent application, filed under the provisions of 35 U.S.C. 116 (United States Code), and 37 CFR 1.47(a), Rules of Practice in Patent Cases. Should a patent be granted on the application you will be designated therein as a joint inventor.

As a named inventor you are entitled to inspect any paper in the file wrapper of the application, order copies of all or any part thereof (at a prepaid cost per 37 CFR 1.19) or make your position of record in the application. Alternatively, you may arrange to do any of the preceding through a registered patent attorney or agent presenting written authorization from you. If you care to join the application, counsel of record (see below) would presumably assist you. Joining in the application would entail the filing of an appropriate oath or declaration by you pursuant to 37 CFR 1.63.

Telephone inquiries regarding this communication should be directed to the undersigned Petitions Attorney at (571) 272-3212. Requests for information regarding your application should be directed to the File Information Unit at 703/308-2733. Information regarding how to pay for and order a copy of the application, or a specific paper in the application, should be directed to Certification Division at 703/308-9726 or 1-800-972-6382 (outside the Washington D.C. area).

Patricia Faison-Ball

Patricia Faison-Ball
Senior Petitions Attorney
Office of Petitions

cc:
MCI, INC
TECHNOLOGY LAW DEPARTMENT
1133 19TH STREET NW, 10TH FLOOR
WASHINGTON DC 20036

UNITED STATES PATENT AND TRADEMARK OFFICE

Commissioner for Patents
United States Patent and Trademark Office
P.O. Box 1450
Alexandria, VA 22313-1450
www.uspto.gov

COPY MAILED

SEP 06 2007

OFFICE OF PETITIONS

ATMI, INC.
7 COMMERCE DRIVE
DANBURY, CT 06810

In re Application of :
John N. Gregg :
Application No. 10/858,509 : ON PETITION
Filed: June 1, 2004 :
Attorney Docket No. ATMI-583-CIP

This is a decision on the petition, filed August 29, 2007 under 37 CFR 1.313(c)(2) to withdraw the above-identified application from issue after payment of the issue fee.

The petition is **GRANTED**.

The above-identified application is withdrawn from issue for consideration of a submission under 37 CFR 1.114 (request for continued examination). See 37 CFR 1.313(c)(2).

Petitioner is advised that the issue fee paid on July 31, 2007 in the above-identified application cannot be refunded. If, however, the above-identified application is again allowed, petitioner may request that it be applied towards the issue fee required by the new Notice of Allowance.[1]

Telephone inquiries should be directed to Irvin Dingle at (571) 272-3210.

This matter is being referred to Technology Center AU 1724 for processing of the request for continued examination under 37 CFR 1.114 and for consideration of the concurrently filed amendment.

Irvin Dingle
Petitions Examiner
Office of Petitions

cc: Vincent Gustafson
P.O. Box 14329
Research Triangle Park, NC 27709

---

[1] The request to apply the issue fee to the new Notice may be satisfied by completing and returning the new Issue Fee Transmittal Form PTOL-85(b), which includes the following language thereon: Commissioner for Patents is requested to apply the Issue Fee and Publication Fee (if any) or re-apply any previously paid issue fee to the application identified above. Petitioner is advised that, whether a fee is indicated as being due or not, the Issue Fee Transmittal Form **must** be completed and timely submitted to avoid abandonment. Note the language in bold text on the first page of the Notice of Allowance and Fee(s) Due (PTOL-85).

UNITED STATES PATENT AND TRADEMARK OFFICE

Commissioner for Patents
United States Patent and Trademark Office
P.O. Box 1450
Alexandria, VA 22313-1450
www.uspto.gov

WILLIAMS, MORGAN & AMERSON, P.C.
10333 RICHMOND, SUITE 1100
HOUSTON, TX 77042

COPY MAILED

MAY 0 6 2005

OFFICE OF PETITIONS

In re Application of	:	
Chin Tan et al.	:	
Application No. 10/858,510	:	ON PETITION
Filed: May 31, 2004	:	
Attorney Docket No. 6000.004600/1701	:	

This is a decision on the petition filed January 10, 2005, requesting, in effect, that Figures C-13 and C-14 filed on January 10, 2005, be entered as part of the original disclosure.

The petition is **dismissed**.

Drawings were filed with the application. A review of the original drawings fails to indicate Figures C-13 and C-14 were filed with the original application.

Replacement drawings were filed on November 1, 2004. The file does not contain a replacement drawing sheet containing Figures C-13 and C-14.

The instant petition was filed in response to a Notice of Omitted Items indicating the absence of Figures C-13 and C-14. The petition argues that Figures C-13 and C-14 were filed with the replacement drawings. Apparently petitioner interpreted the Notice as only applying to the Figures filed November 1, 2004, and not the original drawing Figures. Even *if* Figures C-13 and C-14 were filed on November 1, 2004, the drawings could not be entered since C-13 and C-14 were not part of the original application.

If petitioner wishes for the application to contain Figures C-13 and C-14, petitioner must:

(1) prove the Figures were submitted with the original application, or
(2) file a formal amendment adding the Figures which can be entered if the amendment does not add new matter.

The petition fee of $400 has been charged to petitioner's deposit account.[1]

Further correspondence with respect to this matter should be addressed as follows:

By mail: Mail Stop Petition
Commissioner for Patents
P.O. Box 1450
Alexandria, VA 22313-1450

By facsimile: (703) 872-9306
Attn: Office of Petitions

---

[1] As of November 1, 2004, the fee for a petition under 37 CFR 1.53 is $400. See Revision of Patent Fees for Fiscal Year 2005, 69 Fed. Reg. 52604 (Aug. 27, 2004) and Changes to Support Implementation of the United States Patent and Trademark Office 21st Century Strategic Plan, 1287 Off. Gaz. Pat. Office 67 (Oct. 12, 2004).

If a request for reconsideration is filed, and a decision on the new petition is not received within three months, petitioner may wish to call the number below to check on the status of the renewed petition.

If a request of reconsideration, or petition under 37 CFR 1.182, is not filed within two months, the file will be further processed without Figures C-13 and C-14. The two month time period is not extendable.

Telephone inquiries should be directed to Petitions Attorney Steven Brantley at (571) 272-3203.

Charles Steven Brantley
Senior Petitions Attorney
Office of Petitions

UNITED STATES PATENT AND TRADEMARK OFFICE

Commissioner for Patents
United States Patent and Trademark Office
P.O. Box 1450
Alexandria, VA 22313-1450
www.uspto.gov

MCI, INC
TECHNOLOGY LAW DEPARTMENT
1133 19TH STREET NW, 10TH FLOOR
WASHINGTON DC 20036

COPY MAILED

NOV 1 9 2004

OFFICE OF PETITIONS

In re Application of DelRegno, et al. Application No. 10/858,517 Filed: June 1, 2004 Attorney Docket No. RIC04011 For: SYSTEM AND METHOD FOR PROVIDING A MULTIPLE-PROTOCOL CROSSCONNECTION	DECISION ACCORDING STATUS UNDER 37 CFR 1.47(a)

This is in response to the petition under 37 CFR 1.47(a), filed October 26, 2004.

The petition is granted.

Petitioners have shown that the non-signing inventor, William Drake, has constructively refused to join in the filing of the above-identified application after having been presented with the application papers. Specifically, the petition signed by Attorney Eden U.I. Stright establishes that the inventor was successfully mailed the application papers, including the specification, claims, abstract, and drawings, but failed to respond to numerous requests that he sign the declaration, despite the fact that he stated he would execute and return the declaration in a timely fashion. Petitioners have submitted a declaration in compliance with 37 CFR 1.63 and 1.64.

This application and papers have been reviewed and found in compliance with 37 CFR 1.47(a). This application is hereby accorded Rule 1.47(a) status.

As provided in Rule 1.47(c), this Office will forward notice of this application's filing to the non-signing inventor at the address given in the petition. Notice of the filing of this application will also be published in the Official Gazette.

After this decision is mailed, the above-identified application will be forwarded to the Office of Initial Patent Examination for further processing.

Telephone inquiries should be directed to the undersigned at (571) 272-3230.

E. Shirene Willis
Senior Petitions Attorney
Office of Petitions

United States
Patent And
Trademark Office

P.O. Box 1450, Alexandria, Virginia 22313-1450 – www.uspto.gov

PETITION DECISION

08/18/04

Eric L. Prahl
Wilmer Cutler Pickering Hale and Dorr LLP
60 State Street
Boston, MA 02109

Dear Applicant:

The Box PG Pub replacement drawings for application number 10/858524 received on 07/26/04 by the U. S. Patent and Trademark Office will be included for patent publication.

Telephone inquiries should be directed to Kaletus King, Office of Pre-Grant Publication 703 605-4283.

Kaletus King
Signature of Reviewer, Office of Pre-Grant Publication

UNITED STATES PATENT AND TRADEMARK OFFICE

Commissioner for Patents
United States Patent and Trademark Office
P.O. Box 1450
Alexandria, VA 22313-1450
www.uspto.gov

ROBERT W STROZIER, P.L.L.C
PO BOX 429
BELLAIRE TX 77402-0429

COPY MAILED

OCT 04 2007

OFFICE OF PETITIONS

In re Application of :
Stephen Ho et al :
Application No. 10/858,559 : DECISION ON PETITION
Filed: June 1, 2004 :
Attorney Docket No. :
02004/05CIP2

This is a decision on the petition under 37 CFR 1.137(b), filed February 12, 2007, to revive the above-identified application.

The petition is **GRANTED.**

The application became abandoned for failure to timely reply within the meaning of 37 CFR 1.113 to the final Office action, mailed June 6, 2006, which set a shortened statutory period for reply of three (3) months. No extensions of time were obtained under the provisions of 37 CFR 1.136(a). Accordingly, the application became abandoned on September 7, 2006. A Notice of Abandonment was mailed on January 19, 2007.

The petition satisfies the requirements of 37 CFR 1.137(b) in that petitioner has supplied (1) the required reply (which the examiner has indicated places the application in condition for allowance), (2) the petition fee of $750, and (3) a proper statement of unintentional delay. Accordingly, the failure to timely reply to the final Office action of June 6, 2006 is accepted as being unintentionally delayed.

This application is being referred to Technology Center AU 3711 for appropriate action in the normal course of business on the reply received February 12, 2007.

Telephone inquiries concerning this decision should be directed to the undersigned at (571) 272-3218.

Frances Hicks
Petitions Examiner
Office of Petitions

UNITED STATES PATENT AND TRADEMARK OFFICE

Commissioner for Patents
United States Patent and Trademark Office
P.O. Box 1450
Alexandria, VA 22313-1450
www.uspto.gov

ROBERT W STROZIER, P.L.L.C
PO BOX 429
BELLAIRE TX 77402-0429

COPY MAILED

OCT 23 2007

OFFICE OF PETITIONS

In re Application of
Stephen Ho et al
Application No. 10/858,559
Filed: June 1, 2004
Attorney Docket No.
02004/05CIP2

DECISION ON PETITION

This is a SUBSTITUTE decision on the petition under 37 CFR 1.137(b), filed February 12, 2007, to revive the above-identified application. The decision mailed on October 4, 2007 is vacated.

The petition is **DISMISSED.**

Any request for reconsideration of this decision must be submitted within TWO (2) MONTHS from the mail date of this decision. Extensions of time under 37 CFR 1.136(a) are permitted. The reconsideration request should include a cover letter entitled "Renewed Petition under 37 CFR 1.137(b)." This is **not** a final agency action within the meaning of 5 U.S.C. § 704.

The application became abandoned for failure to timely reply within the meaning of 37 CFR 1.113 to the final Office action, mailed June 6, 2006, which set a shortened statutory period for reply of three (3) months. No extensions of time were obtained under the provisions of 37 CFR 1.136(a). Accordingly, the application became abandoned on September 7, 2006. A Notice of Abandonment was mailed on January 19, 2007.

A grantable petition under 37 CFR 1.137(b) must be accompanied by: (1) the required reply, unless previously filed; (2) the petition fee as set forth in 37 CFR 1.17(m); (3) a statement that the entire delay in filing the required reply from the due date for the reply until the filing of a grantable petition pursuant to 37 CFR 1.137(b) was unintentional; and (4) any terminal disclaimer (and fee as set forth in 37 CFR 1.20(d)) required by 37 CFR 1.137(d). Where there is a question as to whether either the abandonment or the delay in filing a petition under 37 CFR 1.137 was unintentional, the Director may require additional

information. *See* MPEP 711.03(c)(II)(C) and (D). The instant petition lacks item (1).

As noted above, this application became abandoned for failure to timely file a reply within the meaning of 37 CFR 1.113 to the final Office action of June 6, 2006. The proposed reply required for consideration of a petition to revive must be a Notice of Appeal (and appeal fee required by 37 CFR 41.20(b)(2)), an amendment that *prima facie* places the application in condition for allowance, a Request for Continued Examination (RCE) and submission (37 CFR 1.114), or the filing of a continuing application under 37 CFR 1.53(b). *See* MPEP 711.03(c)(III)(A)(2). Since the amendment submitted does not *prima facie* place the application in condition for allowance (see attached copy of Examiner's Advisory Action), the reply required must be a Notice of Appeal (and appeal fee), RCE, or the filing of a continuing application under 37 CFR 1.53(b).

The reply to continue prosecution must be accompanied by a renewed petition under 37 CFR 1.137(b). No additional petition fee is required.

The undersigned sincerely apologizes for any inconvenience caused petitioner by the improper granting of the petition to revive on October 4, 2007. Contrary to the indication in the decision that the Examiner has indicated that the amendment placed the application in condition for allowance, the Examiner did not in fact so indicate, as seen by the attached copy of the Examiner's Advisory Action.

Future correspondence regarding this decision should be addressed as follows:

By Mail: Mail Stop PETITION
Commissioner for Patents
P. O. Box 1450
Alexandria, VA 22313-1450

By hand: U. S. Patent and Trademark Office
Customer Service Window, Mail Stop Petitions
Randolph Building
401 Dulany Street
Alexandria, VA 22314

The centralized facsimile number is **(571) 273-8300.**

Correspondence regarding this decision may also be filed through the electronic filing system of the USPTO.

To expedite consideration, petitioner may wish to contact the undersigned regarding the filing of the renewed petition under 37 CFR 1.137(b).

Telephone inquiries concerning this decision should be directed to the undersigned at (571) 272-3218.

Frances Hicks
Petitions Examiner
Office of Petitions

ATTACHMENT: Courtesy Copy of Advisory Action

Advisory Action Before the Filing of an Appeal Brief	Application No. 10/858,559	Applicant(s) HO ET AL.	
	Examiner John Ricci	Art Unit 3711	

--The MAILING DATE of this communication appears on the cover sheet with the correspondence address --

THE REPLY FILED 12 February 2007 FAILS TO PLACE THIS APPLICATION IN CONDITION FOR ALLOWANCE.

1. ☒ The reply was filed after a final rejection, but prior to or on the same day as filing a Notice of Appeal. To avoid abandonment of this application, applicant must timely file one of the following replies: (1) an amendment, affidavit, or other evidence, which places the application in condition for allowance; (2) a Notice of Appeal (with appeal fee) in compliance with 37 CFR 41.31; or (3) a Request for Continued Examination (RCE) in compliance with 37 CFR 1.114. The reply must be filed within one of the following time periods:
   a) ☒ The period for reply expires 3 months from the mailing date of the final rejection.
   b) ☐ The period for reply expires on: (1) the mailing date of this Advisory Action, or (2) the date set forth in the final rejection, whichever is later. In no event, however, will the statutory period for reply expire later than SIX MONTHS from the mailing date of the final rejection.
   Examiner Note: If box 1 is checked, check either box (a) or (b). ONLY CHECK BOX (b) WHEN THE FIRST REPLY WAS FILED WITHIN TWO MONTHS OF THE FINAL REJECTION. See MPEP 706.07(f).

Extensions of time may be obtained under 37 CFR 1.136(a). The date on which the petition under 37 CFR 1.136(a) and the appropriate extension fee have been filed is the date for purposes of determining the period of extension and the corresponding amount of the fee. The appropriate extension fee under 37 CFR 1.17(a) is calculated from: (1) the expiration date of the shortened statutory period for reply originally set in the final Office action; or (2) as set forth in (b) above, if checked. Any reply received by the Office later than three months after the mailing date of the final rejection, even if timely filed, may reduce any earned patent term adjustment. See 37 CFR 1.704(b).

NOTICE OF APPEAL

2. ☐ The Notice of Appeal was filed on _____. A brief in compliance with 37 CFR 41.37 must be filed within two months of the date of filing the Notice of Appeal (37 CFR 41.37(a)), or any extension thereof (37 CFR 41.37(e)), to avoid dismissal of the appeal. Since a Notice of Appeal has been filed, any reply must be filed within the time period set forth in 37 CFR 41.37(a).

AMENDMENTS

3. ☒ The proposed amendment(s) filed after a final rejection, but prior to the date of filing a brief, will not be entered because
   (a) ☐ They raise new issues that would require further consideration and/or search (see NOTE below);
   (b) ☐ They raise the issue of new matter (see NOTE below);
   (c) ☐ They are not deemed to place the application in better form for appeal by materially reducing or simplifying the issues for appeal; and/or
   (d) ☒ They present additional claims without canceling a corresponding number of finally rejected claims.
   NOTE: _____. (See 37 CFR 1.116 and 41.33(a)).
4. ☐ The amendments are not in compliance with 37 CFR 1.121. See attached Notice of Non-Compliant Amendment (PTOL-324).
5. ☒ Applicant's reply has overcome the following rejection(s): claims 2, 9-12,14,21,24,27,30-32.
6. ☐ Newly proposed or amended claim(s) _____ would be allowable if submitted in a separate, timely filed amendment canceling the non-allowable claim(s).
7. ☒ For purposes of appeal, the proposed amendment(s): a) ☒ will not be entered, or b) ☐ will be entered and an explanation of how the new or amended claims would be rejected is provided below or appended.
   The status of the claim(s) is (or will be) as follows:
   Claim(s) allowed: 33-40.
   Claim(s) objected to: 25,26,28 and 29.
   Claim(s) rejected: 2,9-12,14,21,24,27 and 30-32.
   Claim(s) withdrawn from consideration: _____.

AFFIDAVIT OR OTHER EVIDENCE

8. ☐ The affidavit or other evidence filed after a final action, but before or on the date of filing a Notice of Appeal will not be entered because applicant failed to provide a showing of good and sufficient reasons why the affidavit or other evidence is necessary and was not earlier presented. See 37 CFR 1.116(a).
9. ☐ The affidavit or other evidence filed after the date of filing a Notice of Appeal, but prior to the date of filing a brief, will not be entered because the affidavit or other evidence failed to overcome all rejections under appeal and/or appellant fails to provide a showing a good and sufficient reasons why it is necessary and was not earlier presented. See 37 CFR 41.33(d)(1).
10. ☐ The affidavit or other evidence is entered. An explanation of the status of the claims after entry is below or attached.

REQUEST FOR RECONSIDERATION/OTHER

11. ☐ The request for reconsideration has been considered but does NOT place the application in condition for allowance because: _____.
12. ☐ Note the attached Information Disclosure Statement(s). (PTO/SB/08) Paper No(s). _____
13. ☐ Other: _____.

John Ricci

John Ricci
Primary Examiner
Art Unit: 3711

OIPE IAP21
FEB 12 2007
PATENT & TRADEMARK OFFICE

IN THE UNITED STATES PATENT AND TRADEMARK OFFICE

APPLICANTS:	**HO, ET. AL.**	§	ART UNIT NO.:**3712**
SERIAL NO.:	**10/858,559**	§	EXAMINER: **RICCI, JA**
FILED:	**06/01/2004**	§	DOCKET NO.:**02004/05CIP2**
		§	
TITLE: **PAINTBALL REFILLERS AND METHOD FOR MAKING AND USING SAME**		§	

EV 642 429 534 US Express Mail Number	CERTIFICATE OF MAIL BY EXPRESS MAIL I hereby certify that this paper or fee is being deposited with the United States Postal Service "Express Mail Post Office to Addressee" service under 37 C.F.R. § 1.10 on the date indicated above and is addressed to the: Commissioner of Patent MS AMENDMENT P.O. Box 1450, Alexandria, VA 22313-1450	February 12, 2007 Date of Deposit
Robert W. Strozier		February 12, 2007 Date of Signature

RESPONSE TO 6 JUNE 2006 FINAL OFFICE ACTION

Dear Examiner Ricci:

In response to the Final Office Action dated **6 June 2006**, Applicants submit the following amendments and remarks:

Do Not Enter
JR 10/10/07

SUMMARY OF NON-FINAL OFFICE ACTION

Claims 2, 9-12, 14, 21, 24, 27, & 30-32	103(a) – Gerrish 2,684,807
Claims 25, 26, 28, & 29	Allowable
Claims 33-40	Allowed

02/14/2007 EDYALEM1 00000007 10858559
02 FC:2201 200.00 OP
03 FC:2202 150.00 OP

UNITED STATES PATENT AND TRADEMARK OFFICE

Commissioner for Patents
United States Patent and Trademark Office
P.O. Box 1450
Alexandria, VA 22313-1450
www.uspto.gov

ERIC K. SATERMO
P O BOX 19099
IRVINE, CA 92623-9099

COPY MAILED

APR 18 2007

OFFICE OF PETITIONS

In re Application of	:	
Daniel G. Styles	:	
Application No. 10/858,563	:	DECISION ON PETITION
Filed: June 1, 2004	:	
Attorney Docket No. 0303-01	:	

This is a decision on the petition under 37 CFR 1.137(b), filed September 25, 2006, to revive the above-identified application.

The petition is **GRANTED**.

The application became abandoned for failure to reply in a timely manner to the Restriction Requirement, mailed November 30, 2005, which set a shortened statutory period for reply of one (1) month or thirty (30) days (whichever is later). No extensions of time were obtained under the provisions of 37 CFR 1.136(a). Accordingly, the application became abandoned on December 31, 2005. A Notice of Abandonment was mailed on June 19, 2006.

The petition satisfies the requirements of 37 CFR 1.137(b) in that petitioner has supplied (1) the reply in the form of an election, (2) the petition fee of $750, and (3) a proper statement of unintentional delay. Accordingly, the reply to the Office action of November 30, 2005 is accepted as being unintentionally delayed.

Telephone inquiries concerning this decision should be directed to the undersigned at (571) 272-3218.

This application is being referred to Technology Center AU 3711 for appropriate action in the normal course of business on the reply received September 25, 2006.

Frances Hicks

Frances Hicks
Petitions Examiner
Office of Petitions

UNITED STATES PATENT AND TRADEMARK OFFICE

DAC/ IFW

Commissioner for Patents
United States Patent and Trademark Office
P.O. Box 1450
Alexandria, VA 22313-1450
www.uspto.gov

ERIC K. SATERMO
P O BOX 19099
IRVINE, CA 92623-9099

COPY MAILED

APR 18 2007

OFFICE OF PETITIONS

In re Application of	:	
Daniel G. Styles	:	
Application No. 10/858,563	:	DECISION ON PETITION
Filed: June 1, 2004	:	
Attorney Docket No. 0303-01	:	

This is a decision on the petition under 37 CFR 1.137(b), filed September 25, 2006, to revive the above-identified application.

The petition is **GRANTED**.

The application became abandoned for failure to reply in a timely manner to the Restriction Requirement, mailed November 30, 2005, which set a shortened statutory period for reply of one (1) month or thirty (30) days (whichever is later). No extensions of time were obtained under the provisions of 37 CFR 1.136(a). Accordingly, the application became abandoned on December 31, 2005. A Notice of Abandonment was mailed on June 19, 2006.

The petition satisfies the requirements of 37 CFR 1.137(b) in that petitioner has supplied (1) the reply in the form of an election, (2) the petition fee of $750, and (3) a proper statement of unintentional delay. Accordingly, the reply to the Office action of November 30, 2005 is accepted as being unintentionally delayed.

Telephone inquiries concerning this decision should be directed to the undersigned at (571) 272-3218.

This application is being referred to Technology Center AU 3711 for appropriate action in the normal course of business on the reply received September 25, 2006.

Frances Hicks

Frances Hicks
Petitions Examiner
Office of Petitions

UNITED STATES PATENT AND TRADEMARK OFFICE

Commissioner for Patents
United States Patent and Trademark Office
P.O. Box 1450
Alexandria, VA 22313-1450
www.uspto.gov

MARK A. SUPERKO
VARIAN SEMICONDUCTOR EQUIPMENT ASSOCIATES INC
35 DORY ROAD
GLOUCESTER, MA 01930

COPY MAILED

MAY 2 4 2005

OFFICE OF PETITIONS

In re Application of	:	
Ziwei Fang et al	:	
Application No. 10/858,582	:	ON PETITION
Filed: June 2, 2004	:	
Attorney Docket No. V0077.70265US00	:	

This is a decision on the petition under 37 CFR 1.173(b), filed April 18, 2005, to revive the above-identified application.

The petition is **GRANTED.**

The above-identified application became abandoned for failure to reply in a timely manner to the Notice to File Corrected Application Papers (Notice) mailed July 26, 2004. The Notice set a period for reply of two (2) months from the mail date of the Notice. No extensions of time under the provisions of 37 CFR 1.136(a) were obtained. Accordingly, the above-identified application became abandoned on September 27, 2004.

The file does not indicate a change of address has been submitted, although the address given on the petition differs from the address of record. If appropriate, a change of address should be filed in accordance with MPEP 601.03. A courtesy copy of this decision is being mailed to the address given on the petition; however, the Office will mail all future correspondence solely to the address of record.

Telephone inquiries concerning this decision should be directed to Wan Laymon at (571) 272-3220.

This matter is being referred to the Office of Initial Patent Examination for preexamination processing.

Wan Laymon
Petitions Examiner
Office of Petitions
Office of the Deputy Commissioner
for Patent Examination Policy

cc: WOLF GREENFIELD & SACKS, PC
FEDERAL RESERVE PLAZA
600 ATLANTIC AVENUE
BOSTON, MA 02210-2206

UNITED STATES PATENT AND TRADEMARK OFFICE

Commissioner for Patents
United States Patent and Trademark Office
P.O. Box 1450
Alexandria, VA 22313-1450
www.uspto.gov

HOFFMANN & BARON, LLP
6900 JERICHO TURNPIKE
SYOSSET NY 11791

COPY MAILED

APR 2 8 2009

OFFICE OF PETITIONS

In re Application of	:	
Timothy Samuel Girton	:	DECISION ON PETITION
Application No. 10/858,589	:	TO WITHDRAW
Filed: June 2, 2004	:	FROM RECORD
Attorney Docket No. 760-35 RCE/CON	:	

This is a decision on the Request to Withdraw as attorney or agent of record under 37 C.F.R. § 1.36(b), filed March 17, 2009.

The request is **APPROVED**.

A grantable request to withdraw as attorney/agent of record must be signed by every attorney/agent seeking to withdraw or contain a clear indication that one attorney is signing on behalf of another/others.

The request was signed by Anna-Lisa Gallo on behalf of all attorneys of record who are associated with customer No. 23869.

All attorneys/agents associated with the Customer Number 23869 have been withdrawn. Applicant is reminded that there is no attorney of record at this time.

The correspondence address of record remains unchanged.

Telephone inquires concerning this decision should be directed to Petitions Examiner Joan Olszewski at (571) 272-7751. All other inquires concerning either the examination or status of the application should be directed to the Technology Center.

/Liana Walsh/
Liana Walsh
Petitions Examiner
Office of Petitions

UNITED STATES PATENT AND TRADEMARK OFFICE

Commissioner for Patents
United States Patent and Trademark Office
Washington, D.C. 20231
www.uspto.gov

PFIZER INC
STEVE T. ZELSON
150 EAST 42ND STREET
5TH FLOOR - STOP 49
NEW YORK NY 10017-5612

COPY MAILED
AUG 2 9 2008

In re Application of
Joseph Philip Rainville et al.
Application No. 10/858,600
Filed: June 2, 2004
Attorney Docket No. **PC25423A**

ON PETITION

This is a decision on the petition filed July 24, 2008, under 37 CFR 1.181(b), to withdraw the holding of abandonment in accordance with the reasoning of the decision in Delgar Inc. v. Schuyler, 172 USPQ 513.

The petition is **GRANTED**.

This application became abandoned for failure to pay the issue fee on or before April 30, 2008 as was required by the Notice of Allowance mailed January 30, 2008. This application therefore became abandoned on May 1, 2008. Accordingly, a Notice of Abandonment was mailed May 27, 2008.

The file record discloses that the Notice of Allowance was mailed to the address of record, the same address to which the Notice of Abandonment was mailed. However, petitioner contends that the Notice of Allowance was not received. In support, petitioner indicates that a search of the docket records and "EFR" Electronic Folder revealed that the Notice was not received and submits a copy of the docket record, wherein receipt of the Notice would have been entered, had it been received to substantiate the claim. The statement and attachment corroborate non-receipt of the Notice of Allowance.

In view of the facts set forth in the petition, it is concluded that the Notice of Allowance was never received. Accordingly, the holding of abandonment is withdrawn. No petition fee is due and none has been charged.

This matter is being referred to Technology Center 1624 for a re-sending of the Notice of Allowance and Notice of Allowability.

Telephone inquiries concerning this matter should be directed to the undersigned Petitions Attorney at (571) 272-3212.

Patricia Faison-Ball

Patricia Faison-Ball
Senior Petitions Attorney
Office of Petitions

UNITED STATES PATENT AND TRADEMARK OFFICE

UNITED STATES DEPARTMENT OF COMMERCE
United States Patent and Trademark Office
Address: COMMISSIONER FOR PATENTS
P.O. Box 1450
Alexandria, Virginia 22313-1450
www.uspto.gov

John M. Harrington
Kilpatrick Stockton LLP
1001 West Fourth Street
Winston-Salem, NC 27101

Mail Date: 06/28/2010

Applicant	: Juergen Amann	: DECISION ON REQUEST FOR
Patent Number	: 7654625	: RECALCULATION of PATENT
Issue Date	: 02/02/2010	: TERM ADJUSTMENT IN VIEW
Application No	: 10/858,609	: OF WYETH AND NOTICE OF INTENT TO
Filed	: 06/02/2004	: ISSUE CERTIFICATE OF CORRECTION
		:

The Request for Recalculation is **GRANTED** to the extent indicated.

The patent term adjustment has been determined to be **547** days. The USPTO will *sua sponte* issue a certificate of correction reflecting the amount of PTA days determined by the recalculation.

Prior to the issuance of the certificate of correction, the USPTO will afford patentee an opportunity to be heard and request reconsideration. Accordingly, patentee has **one month or thirty (30) days**, whichever is longer, to file a request for reconsideration of this patent term adjustment calculation. See 35 U.S.C. 154(b)(3)(B)(ii) and 37 CFR 1.322(a)(4). No extensions of time will be granted under 37 CFR 1.136.

Patentee should use document code PET.OP if electronically filing a request for reconsideration of this patent term adjustment calculation. The patentee must also include the information required by 37 CFR 1.705(b)(2) and the fee required by 37 CFR 1.18(e). If patentee does not file a timely request for reconsideration of this patent term adjustment calculation including the information required by 37 CFR 1.705(b)(2) and the fee required by 37 CFR 1.18(e), the USPTO will issue a certificate of correction reflecting the PTA determination noted above.

Patentee should be aware that in order to preserve the right to review in the United States District Court for the District of Columbia of the USPTO patent term adjustment determination, patentee must ensure that he or she also take the steps required under 35 U.S.C. 154(b)(4)(A) in a timely manner. Nothing in the request for recalculation should be construed as providing an alternative time frame for commencing a civil action under 35 U.S.C. 154(b)(4)(A).

Any questions concerning this decision should be directed to the Office of Patent Legal Administration at 571-272-7702.

UNITED STATES PATENT AND TRADEMARK OFFICE

COMMISSIONER FOR PATENTS
UNITED STATES PATENT AND TRADEMARK OFFICE
P.O. BOX 1450
ALEXANDRIA, VA 22313-1450
www.uspto.gov

FROMMER LAWRENCE & HAUG
745 FIFTH AVENUE- 10TH FL.
NEW YORK, NY 10151

COPY MAILED

FEB 24 2005

OFFICE OF PETITIONS

In re Application of	:
Neranjan, et al.	: DECISION GRANTING STATUS
Application No. 10/858,618	: UNDER 37 CFR 1.47(a)
Filed: June 2, 2004	:
Atty. Dkt. No.: 590156-2001	:
For: TEMPERATURE CONTROL SYSTEM	:

This decision is in response to the petition under 37 CFR 1.47(a), filed February 4, 2005.

The petition is **GRANTED**.

Petitioner has shown that inventor David D. Neranjan has refused to execute the declaration for the above-identified application after having been presented with the application papers.

The above-identified application and papers have been reviewed and found in compliance with 37 CFR 1.47(a). This application is hereby accorded Rule 1.47(a) status.

As provided in Rule 1.47(c), this Office will forward notice of this application's filing to the non-signing inventors at the addresses given in the petition. Notice of the filing of this application will also be published in the Official Gazette.

After this decision is mailed, the above-identified application will be returned to the Office of Initial Patent Examination for further processing.

Telephone inquiries regarding this decision should be directed to the undersigned at (571) 272-3205.

Alesia M. Brown
Petitions Attorney
Office of Petitions

UNITED STATES PATENT AND TRADEMARK OFFICE

Commissioner for Patents
United States Patent and Trademark Office
P.O. Box 1450
Alexandria, VA 22313-1450
www.uspto.gov

SIEMENS CORPORATION
INTELLECTUAL PROPERTY DEPARTMENT
170 WOOD AVENUE SOUTH
ISELIN NJ 08830

MAILED

APR 12 2010

OFFICE OF PETITIONS

In re Application of	:	
Ziad Burbar	:	
Application No. 10/858,637	:	DECISION ON PETITION
Filed: June 2, 2004	:	
Attorney Docket No. 2004P88062 US	:	

This is a decision on the petition under the unintentional provisions of 37 CFR 1.137(b), filed January 21, 2010, to revive the above-identified application.

The petition is **GRANTED**.

This application became abandoned as a result of petitioner's failure to file a complete and proper appeal brief within the time period provided in 37 CFR 41.37(a)(1). As a complete and proper appeal brief was not filed within one (1) month of the Notification of Non-Compliance with 37 CFR 41.37(c)(1), mailed May 11, 2009, and no extensions of time under the provisions of 37 CFR 1.136(a) were obtained, the appeal was dismissed and the proceedings as to the rejected claims were terminated. See 37 CFR 1.197(b). As no claim was allowed, the application became abandoned on June 12, 2009. See MPEP 1215.04.

The petition satisfies the requirements of 37 CFR 1.137(b) in that petitioner has supplied (1) the reply in the form of a supplemental appeal brief, (2) the petition fee of $1,620, and (3) a proper statement of unintentional delay.

It is not apparent whether the person signing the statement of unintentional delay was in a position to have firsthand or direct knowledge of the facts and circumstances of the delay at issue. Nevertheless, such statement is being treated as having been made as the result of a reasonable inquiry into the facts and circumstances of such delay. See 37 CFR 10.18(b) and Changes to Patent Practice and Procedure; Final Rule Notice, 62 Fed. Reg. 53131, 53178 (October 10, 1997), 1203 Off. Gaz. Pat. Office 63, 103 (October 21, 1997). In the event that such an inquiry has not been made, petitioner must make such an inquiry. If such inquiry results in the discovery that it is not correct that the entire delay in filing the required reply from the due date for the reply until the filing of a grantable petition pursuant to 37 CFR 1.137(b) was unintentional, petitioner must notify the Office.

There is no indication that the person signing the petition was ever given a power of attorney to prosecute the application. If the person signing the petition desires to receive future correspondence regarding this application, the appropriate power of attorney document must be submitted. While a courtesy copy of this decision is being mailed to the person signing the petition, all future correspondence will be directed to the address currently of record until appropriate instructions are received.

Telephone inquiries concerning this decision should be directed to Terri Johnson at (571) 272-2991.

This application is being referred to Technology Center AU 3737 for appropriate action by the Examiner in the normal course of business on the reply received.

Terri Johnson

Terri Johnson
Petitions Examiner
Office of Petitions

cc: **VINCENT M. DELUCA**
1300 I STREET, NW, SUITE 1000 WEST TOWER
WASHINGTON, DC 20005

UNITED STATES PATENT AND TRADEMARK OFFICE

UNITED STATES DEPARTMENT OF COMMERCE
United States Patent and Trademark Office
Address: COMMISSIONER FOR PATENTS
P.O. Box 1450
Alexandria, Virginia 22313-1450
www.uspto.gov

SCHWEGMAN, LUNDBERG & WOESSNER/SAP
P.O. BOX 2938
MINNEAPOLIS, MN 55402

Mail Date: 04/20/2010

Applicant	: Nikolai D. Tankov	: DECISION ON REQUEST FOR
Patent Number	: 7594237	: RECALCULATION of PATENT
Issue Date	: 09/22/2009	: TERM ADJUSTMENT IN VIEW
Appliction No	: 10/858,661	: OF WYETH AND NOTICE OF INTENT TO
Filed	: 06/01/2004	: ISSUE CERTIFICATE OF CORRECTION
		:

The Request for Recalculation is **GRANTED** to the extent indicated.

The patent term adjustment has been determined to be **1007** days. The USPTO will *sua sponte* issue a certificate of correction reflecting the amount of PTA days determined by the recalculation.

Prior to the issuance of the certificate of correction, the USPTO will afford patentee an opportunity to be heard and request reconsideration. Accordingly, patentee has **one month or thirty (30) days**, whichever is longer, to file a request for reconsideration of this patent term adjustment calculation. See 35 U.S.C. 154(b)(3)(B)(ii) and 37 CFR 1.322(a)(4). No extensions of time will be granted under 37 CFR 1.136.

Patentee should use document code PET.OP if electronically filing a request for reconsideration of this patent term adjustment calculation. The patentee must also include the information required by 37 CFR 1.705(b)(2) and the fee required by 37 CFR 1.18(e). If patentee does not file a timely request for reconsideration of this patent term adjustment calculation including the information required by 37 CFR 1.705(b)(2) and the fee required by 37 CFR 1.18(e), the USPTO will issue a certificate of correction reflecting the PTA determination noted above.

Patentee should be aware that in order to preserve the right to review in the United States District Court for the District of Columbia of the USPTO patent term adjustment determination, patentee must ensure that he or she also take the steps required under 35 U.S.C. 154(b)(4)(A) in a timely manner. Nothing in the request for recalculation should be construed as providing an alternative time frame for commencing a civil action under 35 U.S.C. 154(b)(4)(A).

Any questions concerning this decision should be directed to the Office of Patent Legal Administration at 571-272-7702.

UNITED STATES PATENT AND TRADEMARK OFFICE

Commissioner for Patents
United States Patent and Trademark Office
P.O. Box 1450
Alexandria, VA 22313-1450
www.uspto.gov

James E. Parris
P.O. Box 233
Hailey ID 83333

COPY MAILED

JUN 28 2005

OFFICE OF PETITIONS

In re Application of
Brian Sutton
Application No. 10/858,678
Filed: June 1, 2004
Attorney Docket No. 052004400-1

: DECISION GRANTING PETITION

This is a decision on the petition under 37 CFR 1.137(b), filed April 26, 2005, to revive the above-identified application.

This application became abandoned for failure to reply timely to the Notice to File Corrected Application Papers mailed on July 26, 2004, which set a two-month extendable period to respond. Petitioner did not obtain any extensions of time under 37 CFR 1.136(a). Accordingly, this application became abandoned on September 27, 2004. A Notice of Abandonment was mailed on September 27, 2005.

The petition is granted.

The Office will construe petitioner's statement of unintentional delay to mean that the "entire delay in filing the required reply from the due date of a grantable petition under 37 CFR 1.137(b) was unintentional." If this is an incorrect interpretation, petitioner should contact this Office immediately.

This application is being forwarded to the Office of Initial Patent Examination for further processing.

Telephone inquiries specifically concerning this decision should be directed to the undersigned at (571) 272-3211.

Christina Tartera Donnell

Christina Tartera Donnell
Senior Petitions Attorney
Office of Petitions

UNITED STATES PATENT AND TRADEMARK OFFICE

Commissioner for Patents
United States Patent and Trademark Office
P.O. Box 1450
Alexandria, VA 22313-1450
www.uspto.gov
DIW 11-04

ADAMS EVANS P.A.
2180 TWO WACHOVIA CENTER
301 S. TRYON STREET
CHARLOTTE NC 28282

COPY MAILED

NOV 18 2004

OFFICE OF PETITIONS

In re Application of	:
Baloga and Simms	:
Application No. 10/858,682	: DECISION ACCORDING STATUS
Filed: 2 June, 2004	: UNDER 37 CFR 1.47(b)
Attorney Docket No. 3144/8	:

This is in response to the petition filed under 37 CFR 1.47(b) on 29 September, 2004 (certificate of mailing 27 September, 2004).

Petitioners have shown, via the statement of registered patent attorney W. Thad Adams, III, that a copy of the application papers was sent to the last known address of each of the non-signing inventors, but that the inventors did not return the executed declaration. Additionally, petitioners have shown proprietary interest by providing an assignment signed by the non-signing inventors. Lastly, petitioner has submitted a declaration in compliance with 37 CFR 1.63 and 1.64 and has demonstrated that such action is necessary to prevent irreparable damage.

This application and papers have been reviewed and found in compliance with 37 CFR 1.47(b). This application is hereby accorded Rule 1.47(b) status.

As provided in Rule 1.47(c), this Office will forward notice of this application's filing to the non-signing inventor. Notice of the filing of this application will also be published in the Official Gazette.

The application file is being referred to the Office of Initial Patent Examination for further processing.

Telephone inquiries regarding this communication should be directed to the undersigned at 571.272.3231.

D Wood

Douglas I. Wood
Senior Petitions Attorney
Office of Petitions

UNITED STATES PATENT AND TRADEMARK OFFICE

Commissioner for Patents
United States Patent and Trademark Office
P.O. Box 1450
Alexandria, VA 22313-1450
www.uspto.gov

ALLEMAN HALL McCOY
RUSSELL & TUTTLE LLP
806 S. BROADWAY, STE. 600
PORTLAND, OR 97205

COPY MAILED

AUG 3 1 2005

OFFICE OF PETITIONS

In re Application of :
Castaldi et al. :
Application No. 10/858,693 :
Filed: June 1, 2004 : DECISION ON
For: SYSTEM AND METHOD FOR UPDATING : PETITION
AN IMAGE DISPLAY DEVICE FROM :
A REMOTE LOCATION :

This is a decision in response to the Petition to Revive the application under 37 CFR 1.137(b), filed February 28, 2005.

This Petition is hereby **dismissed as untimely**.

The application is **abandoned**.

Background

The above-identified application became abandoned for failure to timely and properly respond to the Notice to File Missing Parts of Nonprovisional Application ("Notice"), mailed July 29, 2004. The Notice required, *inter alia*, a fully executed signed oath or declaration and a late filing fee, oath or declaration and surcharge. The Notice set a two (2) month period for reply. Extensions of time under 37 CFR 1.136(a) were available. No response having been received, the application became abandoned on September 30, 2004. A Notice of Abandonment was mailed February 2, 2004.

Applicant filed a declaration in response to the Notice on January 28, 2005; however, the declaration failed to include the signature of one of the inventors. Applicant also did not file a petition under 37 CFR 1.47(a) (to allow the other inventors to proceed with the application on behalf of himself or herself and the nonsigning inventors), at that time.

In response to the January 28, 2005 filing, this Office mailed a Notice of Incomplete Reply (Nonprovisional) on February 22,

2005, informing Applicant that the response filed January 28, 2005 was incomplete because the signature of inventor Mark Porter was missing from the declaration. The Notice of Incomplete Reply also informed Applicant that the period for reply remained that set forth in the Notice.

The instant petition

Applicant files the instant petition and declaration executed by inventor Mark Porter.

Applicant is advised that the period for reply to the Notice is not a statutory period, and as such, the reply period may extend beyond six (6) months, to wit - the Notice provided for a two (2) month period for reply, and allowed for extensions of time under 37 CFR 1.136(a). The maximum extendable period under 37 CFR 1.136(a) is five (5) months. Accordingly, Applicant had seven (7) months from the mail date of the Notice, July 29, 2004, or until March 1, 2005, to respond to the Notice. The instant petition was filed February 28, 2005, and included a four (4) month extension of time request. A review of the Application file reveals that Applicant included an authorization to charge any additional fees with the Fee Transmittal filed with the application on June 1, 2004. As such, the application was not abandoned on February 28, 2005, when the instant petition was filed.

The petition to revive the application is dismissed as untimely.

The petition fee has been refunded to Applicant's deposit account.

The reply filed with the instant petition

Applicant is advised that the declaration filed with the petition is improper because it fails to list all of the inventors. As required by 37 CFR 1.63, the oath or declaration must identify each inventor. Here, Applicant has filed a four (4) page declaration executed by inventor Porter that lists only inventor Mark Porter (on page 3 of 4 of the declaration).

Because Applicant has failed to file a complete and proper reply to the Notice, **the application is abandoned**.

Further correspondence with respect to this matter should be addressed as follows:

By mail: Commissioner for Patents
PO Box 1450
Alexandria, VA 22313-1450

By FAX: (571) 273-8300
Attn: Office of Petitions

By hand: Customer Service Window
Randolph Building
401 Dulany Street
Alexandria, VA 22314

Telephone inquiries concerning this matter should be directed to the undersigned at (571) 272-3232.

Derek L. Woods
Attorney
Office of Petitions

UNITED STATES PATENT AND TRADEMARK OFFICE

Commissioner for Patents
United States Patent and Trademark Office
P.O. Box 1450
Alexandria, VA 22313-1450
www.uspto.gov

ALLEMAN HALL McCOY
RUSSELL & TUTTLE LLP
806 S. BROADWAY, STE. 600
PORTLAND, OR 97205

COPY MAILED

AUG 3 1 2005

OFFICE OF PETITIONS

In re Application of :
Castaldi et al. :
Application No. 10/858,693 :
Filed: June 1, 2004 : DECISION ON
For: SYSTEM AND METHOD FOR UPDATING : PETITION
AN IMAGE DISPLAY DEVICE FROM :
A REMOTE LOCATION :

This is a decision in response to the Petition to Withdraw Holding of Abandonment, filed February 28, 2005, to withdraw the holding of abandonment in the above-identified application. The petition is properly treated under 37 CFR 1.181.

This Petition is hereby **dismissed as moot**.

Any further petition to revive the above-identified application must be submitted within TWO (2) MONTHS from the mail date of this decision. Extensions of time under 37 CFR 1.136(a) are permitted. The reconsideration request should include a cover letter entitled "Renewed Petition under 37 CFR 1.181." This is **not** final agency action within the meaning of 5 U.S.C. § 704.

The above-identified application became abandoned for failure to timely and properly respond to the Notice to File Missing Parts of Nonprovisional Application ("Notice"), mailed July 29, 2004. The Notice required, *inter alia*, a fully executed signed oath or declaration and a late filing fee, oath or declaration and surcharge. The Notice set a two (2) month period for reply. Extensions of time under 37 CFR 1.136(a) were available. No response having been received, the application became abandoned on September 30, 2004. A Notice of Abandonment was mailed February 2, 2004.

Applicant filed a declaration in response to the Notice on January 28, 2005; however, the declaration failed to include the signature of one of the inventors. Applicant also did not file a petition under 37 CFR 1.47(a) (to allow the other inventors to

proceed with the application on behalf of himself or herself and the nonsigning inventors), at that time.

In response to the January 28, 2005 filing, this Office mailed a Notice of Incomplete Reply (Nonprovisional) on February 22, 2005, informing Applicant that the response filed January 28, 2005 was incomplete because the signature of inventor Mark Porter was missing from the declaration. The Notice of Incomplete Reply also informed Applicant that the period for reply remained that set forth in the Notice.

Applicant files the instant petition and requests that this Office withdraw the holding of abandonment because Applicant asserts that the reply filed on January 28, 2005 was a *bona fide* attempt to advance the application. Applicant cites to 37 CFR 1.135(c).

Initially it is noted that the period for reply to the Notice is not a statutory period, and as such, the reply period may extend beyond six (6) months, to wit - the Notice provided for a two (2) month period for reply, and allowed for extensions of time under 37 CFR 1.136(a). The maximum extendable period under 37 CFR 1.136(a) is five (5) months. Accordingly, Applicant had seven (7) months from the mail date of the Notice, July 29, 2004, or until March 1, 2005, to respond to the Notice. The instant petition was filed February 28, 2005, and included a four (4) month extension of time request. A review of the Application file reveals that Applicant included an authorization to charge any additional fees with the Fee Transmittal filed with the application on June 1, 2004. As such, <u>the application was not abandoned on February 28, 2005</u>, when the instant petition was filed.

The petition to withdraw the holding of abandonment is dismissed as moot.

Applicant's deposit account has been charged the difference between the fee for a four (4) month extension of time ($1590.00) and the fee for a five (5) month extension of time ($2160.00), or $570.00.

<u>The reply filed with the instant petition</u>

A review of the declaration filed with the instant petition reveals that the declaration is improper because it fails to list all of the inventors. As required by 37 CFR 1.63, the oath

or declaration must identify each inventor. Here, Applicant has filed a four (4) page declaration executed by inventor Porter that lists only inventor Mark Porter on page 3 of 4 of the declaration.

Because Applicant has failed to file a complete and proper reply to the Notice, **the application is abandoned**.

Regarding Applicant's assertion - that a bona fide attempt to advance the application was timely filed in response to the Notice, Applicant is advised that the bona fide reply is not applicable prior to examination of the application. A review of the section of the rules that Applicant cites to bears this out.

> When reply by the applicant is a *bona fide* attempt to advance the application to final action, and is substantially a complete reply to the non-final Office action, but consideration of some matter or compliance with some requirement has been inadvertently omitted, applicant may be given a new time period for reply under § 1.134 to supply the omission.

37 CFR 1.135

This section discusses nonfinal and final Office actions, and in particular, an attempt to advance the application to final action by responding to a nonfinal Office action with what is a substantially complete reply. Here, Applicant is responding to an application that is undergoing pre-examination processing. The proper reply to the Notice, where an inventor is unavailable, is a petition under 37 CFR 1.47(a). An inventor may subsequently join in the application.

The petition is dismissed.

Further correspondence with respect to this matter should be addressed as follows:

By mail: Commissioner for Patents
PO Box 1450
Alexandria, VA 22313-1450

By FAX: (571) 273-8300
Attn: Office of Petitions

By hand: Customer Service Window
Randolph Building

401 Dulany Street
Alexandria, VA 22314

Telephone inquiries concerning this matter should be directed to the undersigned at (571) 272-3232.

Derek L. Woods
Attorney
Office of Petitions

UNITED STATES PATENT AND TRADEMARK OFFICE

Commissioner for Patents
United States Patent and Trademark Office
P.O. Box 1450
Alexandria, VA 22313-1450
www.uspto.gov

ALLEMAN HALL McCOY
RUSSELL & TUTTLE LLP
806 S.W. BROADWAY
SUITE 600
PORTLAND, OR 97205

COPY MAILED

SEP 2 9 2005

OFFICE OF PETITIONS

In re Application of	:	DECISION ON PETITION
Castaldi et al.	:	
Application No. 10/858,693	:	
Filed: June 1, 2004	:	
Title of Invention:	:	
SYSTEM AND METHOD FOR	:	
UPDATING AN IMAGE DISPLAY	:	
DEVICE FROM A REMOTE	:	
LOCATION:		

This is a decision on the Petition to Revive the Application abandoned unintentionally, filed September 12, 2005.

This Petition is hereby **granted**.

Background

The above-identified application became abandoned for failure to timely and properly respond to the Notice to File Missing Parts of Nonprovisional Application ("Notice"), mailed July 29, 2004. The Notice required, *inter alia*, a fully executed signed oath or declaration and a late filing fee, oath or declaration and surcharge. The Notice set a two (2) month period for reply. Extensions of time under 37 CFR 1.136(a) were available. No response having been received, the application became abandoned on September 30, 2004. A Notice of Abandonment was mailed February 2, 2004.

Applicant filed a declaration in response to the Notice on January 28, 2005; however, the declaration failed to include the signature of one of the inventors. Applicant also did not file a petition under 37 CFR 1.47(a) (to allow the other inventors to proceed with the application on behalf of himself or herself and the nonsigning inventors), at that time.

In response to the January 28, 2005 filing, this Office mailed a Notice of Incomplete Reply (Nonprovisional) on February 22,

2005, informing Applicant that the response filed January 28, 2005 was incomplete because the signature of inventor Mark Porter was missing from the declaration. The Notice of Incomplete Reply also informed Applicant that the period for reply remained that set forth in the Notice.

Applicant subsequently filed a petition and declaration executed by inventor Mark Porter only. The petition was dismissed in a Decision mailed August 31, 2005, for failing to meet the requirements of a grantable petition under 37 CFR 1.137(b).

With the instant petition, Applicant files an executed oath/declaration and the appropriate fees.

Accordingly, the petition is granted.

The application file is being referred to the Office of Initial Patent Examination for continued processing in due course.

Telephone inquiries concerning this matter should be directed to the undersigned at (571) 272-3232.

Derek L. Woods
Attorney
Office of Petitions

UNITED STATES PATENT AND TRADEMARK OFFICE

COMMISSIONER FOR PATENTS
UNITED STATES PATENT AND TRADEMARK OFFICE
P.O. BOX 1450
ALEXANDRIA, VA 22313-1450
www.uspto.gov

COPY MAILED

MAR 16 2006

OFFICE OF PETITIONS

BUSH INTELLECTUAL PROPERTY LAW GROUP, LLC
P.O. BOX 381146
BIRMINGHAM, AL 35238

In re Application of	:	DECISION GRANTING
Carmichael, et al.	:	PETITION UNDER 37 CFR
Application No. 10/858,703	:	1.137(f)
Filed: June 2, 2004	:	
Atty. Dkt. No.: carmichael 1	:	

This decision is in response to the petition under 37 CFR 1.137(f), filed February 27, 2006.

The petition is hereby **GRANTED**.

Petitioners state that the instant non-provisional application is the subject of an application filed May 31, 3005 in a foreign country, or under a multinational treaty, that requires publication of applications eighteen months after filing. Petitioners' further state that petitioners unintentionally failed to notify the Office of this filing within 45 days of the filing of the subject application in a foreign country.

Hence, the application became abandoned pursuant to 35 USC 122(b)(2)(B)(iii) and 37 CFR 1.213(c) for failure to timely notify the Office of the filing of an application in a foreign country, or under a multilateral international agreement that requires publication of applications 18 months after filing.

A grantable petition under 37 CFR 1.137(f) must be accompanied by: (1) the reply; (2) the petition fee; (3) a statement that the entire delay in filing the required reply from the due date of the reply until the filing of a grantable petition was unintentional; and (4) any terminal disclaimer (and fee as set forth in § 1.20(d)) required pursuant to 37 CFR 1.137(d).

The instant petition has been reviewed and found to be in compliance with the provisions of 37 CFR 1.137(f). Accordingly, the failure to timely notify the Office of a foreign or international filing within 45 days after the date of filing of such foreign or international application as provided by 35 USC

122(b)(2)(B)(iii) and 37 CFR 1.213(c) is accepted as having been unintentionally delayed.

Enclosed please find a Notice regarding rescission.

This application is being forwarded to Technology Center 3700 for further processing.

Telephone inquiries related to this decision may be directed to the undersigned at (571) 272-3205.

Alesia M. Brown
Petitions Attorney
Office of Petitions

Enclosures: Notice Regarding Rescission
Filing Receipt

UNITED STATES PATENT AND TRADEMARK OFFICE

Commissioner for Patents
United States Patent and Trademark Office
P.O. Box 1450
Alexandria, VA 22313-1450
www.uspto.gov

TOWNSEND, TOWNSEND AND CREW, LLP
TWO EMBARCADERO CENTER
8TH FLOOR
SAN FRANCISCO, CALIFORNIA 94111-3834

MAILED
AUG 23 2005
Technology Center 2100

In re Application of: Kitamura
Application No. 10/858,717
Filed: June 1, 2004
For: DYNAMIC LOAD BALANCING OF A STORAGE SYSTEM

DECISION ON PETITION FOR ACCELERATED EXAMINATION UNDER M.P.E.P.§708.02(VIII)

This is a response to the petition filed June 23, 2005 under 37 C.F.R. 102(d) and M.P.E.P. § 708.02(VIII): Accelerated Examination, to make the above-identified application special.

The Petition is **GRANTED**.

M.P.E.P. § 708.02, Section VIII which sets out the prerequisites for a grantable petition for Accelerated Examination under 37 C.F.R. § 102(d) states in relevant part:

A new application (one which has not received any examination by the examiner) may be granted special status provided that applicant (and this term includes applicant's attorney or agent) complies with each of the following items:

(a) Submits a petition to make special accompanied by the fee set forth in 37 CFR 1.17(h);

(b) Presents all claims directed to a single invention, or if the Office determines that all the claims presented are not obviously directed to a single invention, will make an election without traverse as a prerequisite to the grant of special status;

(c) Submits a statement(s) that a pre-examination search was made, listing the field of search by class and subclass, publication, Chemical Abstracts, foreign patents, etc. The pre-examination search must be directed to the invention as claimed in the application for which special status is requested. A search made by a foreign patent office satisfies this requirement;

(d) Submits one copy each of the references deemed most closely related to the subject matter encompassed by the claims if said references are not already of record; and

(e) Submits a detailed discussion of the references, which discussion points out, with the particularity required by 37 CFR 1.111 (b) and (c), how the claimed subject matter is patentable over the references.

In addition, applicant should consider filing an Information Disclosure Statement (PTO-1449 or PTO-SB08A) to ensure consideration of the references cited in the petition by the assigned examiner.

Petition to Make Special **GRANTED** since all of the requirements for special status under MPEP § 708.02(VIII) have been met.

The application file is being forwarded to the Examiner for accelerated examination in accordance with the procedures set forth in M.P.E.P. §708.02, Section VIII. If the application is subsequently allowed, it will be given priority for printing. See M.P.E.P. §1309.

for

Brian L. Johnson
Special Program Examiner
Technology Center 2100
Computer Architecture, Software and Information Security
571-272-3595

AWK

UNITED STATES PATENT AND TRADEMARK OFFICE

Commissioner for Patents
United States Patent and Trademark Office
P.O. Box 1450
Alexandria, VA 22313-1450
www.uspto.gov

THE PROCTER & GAMBLE COMPANY
GLOBAL LEGAL DEPARTMENT – IP
SYCAMORE BUILDING – 4TH FLOOR
299 EAST SIXTH STREET
CINCINNATI OH 45202

MAILED

OCT 01 2009

OFFICE OF PETITIONS

In re Application of	:	
Stephen Wayne Heinzman et al	:	
Application No. 10/858,720	:	DECISION ON PETITION
Filed: June 2, 2004	:	UNDER 37 CFR 1.313(c)
Attorney Docket No. 9260M	:	

This is a decision on the petition under 37 CFR 1.313(c), filed October 1, 2009, to withdraw the above-identified application from issue after payment of the issue fee.

The petition is **GRANTED**.

The above-identified application is withdrawn from issue for consideration of a submission under 37 CFR 1.114 (request for continued examination). *See* 37 CFR 1.313(c)(2).

Petitioner is advised that the issue fee paid on August 28, 2009, cannot be refunded. If, however, this application is again allowed, petitioner may request that it be applied towards the issue fee required by the new Notice of Allowance.[1]

Telephone inquiries should be directed to the undersigned at (571) 272-3208.

This application is being referred to Technology Center AU 1796 for processing of the request for continued examination under 37 CFR 1.114 and for consideration of the concurrently filed IDS.

/Karen Creasy/
Karen Creasy
Petitions Examiner

---

[1] *The request to apply the issue fee to the new Notice may be satisfied by completing and returning the new Part B – Fee(s) Transmittal Form (along with any balance due at the time of submission). Petitioner is advised that the Issue Fee Transmittal Form* ***must*** *be completed and timely submitted to avoid abandonment of the application.*

UNITED STATES PATENT AND TRADEMARK OFFICE

Commissioner for Patents
United States Patent and Trademark Office
P.O. Box 1450
Alexandria, VA 22313-1450
www.uspto.gov

THE NOBLITT GROUP, PLLC
4800 NORTH SCOTTSDALE ROAD
SUITE 6000
SCOTTSDALE AZ 85251

COPY MAILED
SEP 0 8 2008

In re Application of	:	
Hagos Teku et al.	:	
Application No.10/858,741	:	DECISION ON PETITION
Filed: June 2, 2004	:	
Attorney Docket No. RAYTI.2200	:	

This is a decision on the petition under the unintentional provisions of 37 CFR 1.137(b), filed February 1, 2008, to revive the above-identified application.

The petition is **GRANTED**.

This application became abandoned for failure to timely pay the issue and publication fees on or before January 19, 2008, as required by the Notice of Allowance and Fee(s) Due, mailed October 19, 2007. Accordingly, the date of abandonment of this application is January 20, 2008.

The petition satisfies the requirements of 37 CFR 1.137(b) in that petitioner has supplied (1) the reply in the form of payment of the issue fee of $1440.00 and the publication fee of $300.00, (2) the petition fee of $1540.00; and (3) a proper statement of unintentional delay.

Telephone inquiries concerning this decision should be directed to JoAnne Burke at (571) 272-4584.

This application is being referred to Office of Data Management for processing into a patent.

Irvin Dingle
Petitions Examiner
Office of Petitions

UNITED STATES PATENT AND TRADEMARK OFFICE

Commissioner for Patents
United States Patent and Trademark Office
P.O. Box 1450
Alexandria, VA 22313-1450
www.uspto.gov

WADDEY & PATTERSON, P.C.
1600 DIVISION STREET, SUITE 500
NASHVILLE, TN 37203

COPY MAILED

MAY 21 2007

OFFICE OF PETITIONS

In re Application of	:	
Robert Kenneth Pliha	:	
Application No. 10/858,745	:	ON PETITION
Filed: June 2, 2004	:	
Attorney Docket No.	:	

This is a decision on the petition under 37 CFR 1.313(a), filed May 15, 2007, to withdraw the above-identified application from issue.

The petition is **DISMISSED**.

Petitioner requests that the present application be withdrawn from issue for consideration of an IDS filed on May 15, 2007.

37 CFR 1.313(a) states, in part:

> Applications may be withdrawn from issue for further action at the initiative of the Office or upon petition by the applicant. To request that the Office withdraw an application from issue, applicant must file a petition under this section including the fee set forth in § 1.17(h) and a showing of good and sufficient reasons why withdrawal of the application from issue is necessary.

As such, a grantable petition requesting withdrawal of an application from issue must be accompanied by: (1) a showing of good and sufficient reasons why withdrawal of the application from issue is necessary; and (2) the requisite petition fee under 37 CFR 1.17(h). The petition fee of $130 has been charged to petitioner's deposit account.

However, the petition does not set forth good and sufficient reasons as to why withdrawal of the application from issue is necessary. The mere submission of an IDS with the petition does not make withdrawal of the application from issue necessary. There are other avenues open to applicant to have an IDS considered other than by way of petition.

Following the part of 37 CFR 1.313(a) cited above, 37 CFR 1.313(a) goes on to state:

> A petition under this section is not required if a request for continued examination under § 1.114 is filed prior to payment of the issue fee.

The filing of a request for continued examination (RCE) under 37 CFR 1.114 with a submission and the fee set forth in 37 CFR 1.17(e) would have been a proper available option to have the IDS considered. It is well documented that an IDS satisfies the submission requirement under 37 CFR 1.114. *See* MPEP 706.07(h)(II).

For the above reasons, this application will not be withdrawn from issue under the provisions of 37 CFR 1.313(a).

Any inquiries regarding this decision should be directed to Irvin Dingle at (571) 272-3210.

Irvin Dingle
Petition Examiner
Office of Petitions

UNITED STATES PATENT AND TRADEMARK OFFICE

Commissioner for Patents
United States Patent and Trademark Office
P.O. Box 1450
Alexandria, VA 22313-1450
www.uspto.gov

Paper No.

Terry T. Moyer
Milliken & Company Legal Department
P.O. Box 1927
Spartanburg, SC 29304

COPY MAILED

APR 2 8 2005

OFFICE OF PETITIONS

In re Application of	:	
Magee et al.	:	
Application No. 10/858,750	:	ON PETITION
Filed: June 2, 2004	:	
Atty Docket No. 5233A	:	

This is a decision on the "Petition and Response to Notice of Omitted Items," filed December 20, 2004, requesting the USPTO to accept figures 11-13 and to grant the above-identified application a filing date of June 2, 2004. This also responds to the "RESPONSE TO NOTICE OF INCOMPLETE REPLY" filed February 22, 2005, again asserting that the application is entitled to the original filing date of June 2, 2004.

BACKGROUND

The application was deposited on June 2, 2004. The application included an executed declaration from prior application No. 10,150,442 and payment of the basic filing fee of $770. On October 19, 2004, the Office mailed a "Notice of Omitted Items" stating that the application had been accorded a filing date of June 2, 2004; however, Figures 11, 12, 13 described in the specification appeared to have been omitted. This Notice set a two-month non-extendable time limit for response.

On Monday, December 20, 2004, applicants timely responded with an executed declaration and a petition. The petition requested, in effect, that the application be amended to

include the drawing of Figures 11, 12, 13 described in the specification. Applicants stated that they intended to file figures 11-13 and as figures 11-13 were included in the present application by incorporation by reference, their acceptance and accordance of a filing date of June 2, 2004 were requested.

Prior to a decision being rendered on the petition, on February 8, 2005, the Office of Initial Patent Examination (OIPE) mailed a NOTICE OF INCOMPLETE REPLY (NONPROVISIONAL) stating that the reply (presumably the declaration) filed December 20, 2004 had been entered into the record; however, the reply did not include supplemental fees required in the previous notice. This second Notice required payment of the application search fee of $500 and the examination fee of $200. This Notice further showed a filing date of December 20, 2004 for this application. This Notice stated that the period for reply remained as set forth in the previous notice, mailed October 19, 2004.

On February 22, 2005, applicants responded with a two-month extension of time and a request that the filing date be changed to June 2, 2004. Applicants asserted that as the drawings are not new matter, they are entitled to the original filing date of June 2, 2004. Applicants further contended that the Office should have charged any outstanding fees pursuant to the general authorization to charge fees included in the response filed December 20, 2004.

DISCUSSION

To the extent that applicants request a filing date of June 2, 2004 with figures 11, 12 and 13 considered part of the original application disclosure, the petition is **dismissed.** Nonetheless, the application is entitled to a filing date of June 2, 2004, without figures 11, 12 and 13.

on Notice of Omitted Items mailed October 19, 2004

The mailing of a "Notice of Omitted Items" permits the applicant to either: (1) promptly establish prior receipt in the PTO of the drawing(s) at issue (generally by way of a date-stamped postcard receipt (MPEP 503)), or (2) promptly submit the omitted drawing(s) in a nonprovisional application and accept the date of such submission as the application filing date. An applicant asserting that the missing drawing was in fact deposited in the PTO with the application papers

must file a petition (and the appropriate petition fee) with evidence of such deposit. An applicant desiring to submit the omitted drawing in a nonprovisional application and accept the date of such submission as the application filing date must file any omitted drawing(s) with an oath or declaration in compliance with 37 CFR 1.63 and 1.64 referring to such drawing(s) and a petition under 37 CFR 1.182 (with the petition fee under 37 CFR 1.17(f)) requesting the later filing date within two months of the date of the "Notice of Omitted Items" (37 CFR 1.181(f)).

In this case, petitioners first assert that the missing drawing figures should be considered part of the original application disclosure by virtue of an incorporation by reference of a prior application. Alternatively, applicants state that if the USPTO believes that the filing date of this Petition and Response should be the filing date of the application, then applicants request acceptance of the figures and accordingly of a filing date as of the date of filing of the petition. However, the petition does not include a newly executed declaration covering the missing figures. Rather the petition includes a copy of the executed declaration submitted on filing on June 2, 2004. Moreover, by their additional response filed February 22, 2005, petitioners eliminate the request in the alternative and make clear that they wish to maintain a filing date of June 2, 2004.

Petitioners are reminded that a newly executed declaration is not required in response to a Notice of Omitted Items unless petitioner wishes to supply the omitted item and accept a later filing date. (Re-submission of a unrequested declaration may, as it appears to have here, cause the Office to construe the submission as a request for acceptance of the figures and according of a filing date as of the date of receipt of the figures on petition). Petitioners have now made clear that accepting the later filing date of December 20, 2004 is not their intent.

However, petitioners' arguments for a filing date of June 2, 2004 with figures 11-13 as part of the original application disclosure are not persuasive. Application papers not present in the USPTO on the date of deposit will not be considered a part of the original application disclosure. The application file is the Official record of what was received in the Office in an application. A review of the instant application file reveals that figures 11, 12 and 13 are not present among the papers filed on June 2, 2004, and

thus, are not considered deposited in the Office on June 2, 2004. In fact, petitioners do not dispute the conclusion that the drawing figures were not present in the application on filing.

Rather, petitioners seek entry of the drawings by virtue of their incorporation by reference. Petitioners are advised that no petition under 37 CFR 1.182 is necessary to amend the application to include drawing figures 11, 12, and 13. New drawings may be entered by the primary examiner without petition so long as the new drawings contain no new matter. See MPEP § 608.02.

Accordingly, the petition is inappropriate and is subject to dismissal.

It is noted that the specification identified this application as a continuation of prior application No. 10/150,442 and specifically incorporated by reference the disclosure of the prior application. MPEP 201.06(c) states that:

> . . . an applicant may incorporate by reference the prior application by including, in the application-as-filed, a statement that such specifically enumerated prior application or applications are "hereby incorporated herein by reference." The statement may appear in the specification or in the application transmittal letter. The inclusion of this incorporation by reference of the prior application(s) will permit an applicant to amend the continuation or divisional application to include any subject matter in such prior application(s), <u>without the need for a petition</u> provided the continuation or divisional application is entitled to a filing date notwithstanding the incorporation by reference.
> (Emphasis supplied)

Obviously, in view of the incorporation by reference of the prior application, the drawings of Figures 11-13 are not new matter if they were a part of the disclosure of the prior application. Applicants should file a preliminary amendment requesting entry of the figures prior to the first Office action on the merits.

The petition fee for consideration of the petition filed December 20, 2004 is required. The $400 fee has been charged to Deposit Account No. 04-0500, as authorized. The fee will

not be refunded as the petition was not necessitated by any error on the part of the Office.

on NOTICE OF INCOMPLETE REPLY mailed February 8, 2005

The second NOTICE mailed February 8, 2005, was mailed in error. The instant application was filed on June 2, 2004, and retains that date as its filing date. Moreover, the application included the basic filing fee. As the instant nonprovisional application was filed under 35 U.S.C. 111(a) before December 8, 2004, the effective date of the Consolidated Appropriations Act, certain provisions do not apply. Specifically, no search fee (35 U.S.C. 41(a)(1)(G), examination fee 41(a)(3), or application size fee 41(d)(1) are required in this application. See *Changes to Implement the Patent Fee Related Provisions of Consolidated Appropriations Act, 2005, Final Rule*, 70 FR 3880 (January 27, 2005); See also *Questions and Answers concerning the Patent Fee Related Provisions of Consolidated Appropriations Act, 2005,* Http://www.uspto.gov/web/patents/ hr4818/qna.htm (last viewed March 5, 2005).

In view thereof, the NOTICE OF INCOMPLETE REPLY mailed February 8, 2005, is hereby **vacated**.

No petition fee is required for consideration of the response filed February 22, 2005.

Likewise, the fee for an extension of time has been refunded to Deposit Account No. 04-0500, as authorized.

CONCLUSION

The application is entitled to a filing date of June 2, 2004, without figures 11-13.

The application is being returned to the Office of Initial Patent Examination for further processing with a filing date of June 2, 2004, including an indication in Office records, as appropriate, that 27 sheets of drawings were present on filing.

Telephone inquiries related to this decision may be directed to the undersigned at (571) 272-3219.

Nancy Johnson
Senior Petitions Attorney
Office of Petitions

UNITED STATES PATENT AND TRADEMARK OFFICE

Commissioner for Patents
United States Patent and Trademark Office
P.O. Box 1450
Alexandria, VA 22313-1450
www.uspto.gov

COPY MAILED

APR 30 2009

OFFICE OF PETITIONS

Fish & Richardson, P.C.
12390 El Camino Real
San Diego, CA 92130

In re Application of	:	
Frank Mabry et al.	:	
Application No. 10/858,755	:	DECISION ON PETITION
Filed: June 1, 2004	:	TO WITHDRAW
Attorney Docket No. 17373-002001	:	FROM RECORD
	:	

This is a decision on the Request to Withdraw as attorney or agent of record under 37 C.F.R. § 1.36(b), filed April 25, 2006.

The request is **moot because a revocation of power of attorney has been accepted**.

A review of the file record indicates that the power of attorney to James P. Cleary and all attorneys/agents of record have been revoked by the applicant of the patent application on May 2, 2006. Accordingly, the request to withdraw under 37 C.F.R. § 1.36(b) is moot.

All future communications from the Office will be directed to the below-listed address until otherwise notified by applicant.

Telephone inquires concerning this decision should be directed to Kimberly Inabinet at 571-272- 4618.

Kimberly Inabinet
Kimberly Inabinet
Petitions Examiner
Office of Petitions

cc: David G. Duckworth
Drummond & Duckworth
4500 MacArthur Boulevard, Suite 500
Newport Beach, CA 92660

UNITED STATES PATENT AND TRADEMARK OFFICE

UNITED STATES DEPARTMENT OF COMMERCE
United States Patent and Trademark Office
Address: COMMISSIONER FOR PATENTS
P.O. Box 1450
Alexandria, Virginia 22313-1450
www.uspto.gov

MHKKG/Oracle (Sun)
P.O. BOX 398
AUSTIN, TX 78767

Mail Date: 04/20/2010

Applicant	: Beomsuk Kim	: DECISION ON REQUEST FOR
Patent Number	: 7640574	: RECALCULATION of PATENT
Issue Date	: 12/29/2009	: TERM ADJUSTMENT IN VIEW
Appliction No	: 10/858,763	: OF WYETH AND NOTICE OF INTENT TO
Filed	: 06/02/2004	: ISSUE CERTIFICATE OF CORRECTION
		:

The Request for Recalculation is **GRANTED** to the extent indicated.

The patent term adjustment has been determined to be **1427** days. The USPTO will *sua sponte* issue a certificate of correction reflecting the amount of PTA days determined by the recalculation.

Prior to the issuance of the certificate of correction, the USPTO will afford patentee an opportunity to be heard and request reconsideration. Accordingly, patentee has **one month or thirty (30) days**, whichever is longer, to file a request for reconsideration of this patent term adjustment calculation. See 35 U.S.C. 154(b)(3)(B)(ii) and 37 CFR 1.322(a)(4). No extensions of time will be granted under 37 CFR 1.136.

Patentee should use document code PET.OP if electronically filing a request for reconsideration of this patent term adjustment calculation. The patentee must also include the information required by 37 CFR 1.705(b)(2) and the fee required by 37 CFR 1.18(e). If patentee does not file a timely request for reconsideration of this patent term adjustment calculation including the information required by 37 CFR 1.705(b)(2) and the fee required by 37 CFR 1.18(e), the USPTO will issue a certificate of correction reflecting the PTA determination noted above.

Patentee should be aware that in order to preserve the right to review in the United States District Court for the District of Columbia of the USPTO patent term adjustment determination, patentee must ensure that he or she also take the steps required under 35 U.S.C. 154(b)(4)(A) in a timely manner. Nothing in the request for recalculation should be construed as providing an alternative time frame for commencing a civil action under 35 U.S.C. 154(b)(4)(A).

Any questions concerning this decision should be directed to the Office of Patent Legal Administration at 571-272-7702.

UNITED STATES PATENT AND TRADEMARK OFFICE

Commissioner for Patents
United States Patent and Trademark Office
P.O. Box 1450
Alexandria, VA 22313-1450
www.uspto.gov

COATS & BENNETT, PLLC
1400 Crescent Green, Suite 300
Cary NC 27518

In re Application of	:	COPY MAILED
Tracy L. Fulghum	:	
Application No. 10/858787	:	MAR 07 2008
Filing or 371(c) Date: 06/02/2004	:	
Attorney Docket Number:	:	OFFICE OF PETITIONS
4015-5186	:	ON PETITION

This is a decision on the petition to withdraw the holding of abandonment, filed January 29, 2008. The petition is properly treated under 37 C.F.R. § 1.181. See MPEP 711.03.

This Petition is hereby **granted**.

The above-identified application became abandoned for failure to timely and properly reply to the non-final Office action, mailed June 15, 2007. The Office action set a three (3) month period for reply, and provided for extensions of time under 37 CFR 1.136(a). No response having been received, the application became abandoned on September 16, 2007. A Notice of Abandonment was mailed January 25, 2008.

Applicant's Assertion

Applicant files the present petition and asserts that a timely response to the Office action was filed on September 14, 2007. In support of this assertion, applicant files a copy of the reply, which includes a Certificate of Mailing under 37 CFR 1.8, along with a copy of an Electronic Acknowledgment Receipt which acknowledges receipt by this Office of:an Amendment/Remarks of 18 pages, and 1 Page of drawings on September 14, 2007.

Review of Office records

A review of Office records also reveals that the Office received the reply, including an Amendment and one page of drawing, on September 14, 2007.

In view of the foregoing, the petition is granted. The holding of abandonment is hereby withdrawn.

No petition fee has been charged and none is due.

The application will be referred to Technology Center Art Unit 2611 for processing of the reply, and for continued examination in due course.

Telephone inquiries concerning this matter should be directed to the undersigned at (571) 272-3232.

Derek L. Woods
Attorney
Office of Petitions

UNITED STATES PATENT AND TRADEMARK OFFICE

Commissioner for Patents
United States Patent and Trademark Office
P.O. Box 1450
Alexandria, VA 22313-1450
www.uspto.gov

COPY MAILED

SEP 2 6 2005

OFFICE OF PETITIONS

Jim Mosley
News Engin Inc.
15560 Golden Ridge Court
Chesterfield MO 63017

In re Application of
GEORGE LANDAU
Application No.: 10/858,793
Attorney Docket No.:None

: DECISION on PETITION
:
: UNDER 37 CFR 1.137(b)
:

This is a decision on the petition under 37 CFR 1.137(b), filed May 23, 2005 to revive the above-identified application.

The petition is **DISMISSED**.

Any request for reconsideration of this decision must be submitted within TWO (2) MONTHS from the mail date of this decision. Extensions of time under 37 CFR 1.136(a) are permitted. The reconsideration request should include a cover letter entitled "Renewed Petition under 37 CFR 1.137(b)." This is **not** a final agency action within the meaning of 5 U.S.C. § 704.

A grantable petition under 37 CFR 1.137(b) must be accompanied by: (1) the required reply, unless previously filed; (2) the petition fee as set forth in 37 CFR 1.17(m); (3) a statement that the entire delay in filing the required reply from the due date for the reply until the filing of a grantable petition pursuant to 37 CFR 1.137(b) was unintentional; and (4) any terminal disclaimer (and fee as set forth in 37 CFR 1.20(d)) required by 37 CFR 1.137(d). Where there is a question as to whether either the abandonment or the delay in filing a petition under 37 CFR 1.137 was unintentional, the Commissioner may require additional information. See MPEP 711.03(c)(III)(C) and (D). The instant petition lacks Item (3).

37 CFR § 1.33(b) states amendments and other papers, except for written assertions pursuant to § 1.27(c)(2)(ii) of this part, filed in the application must be signed by: (1) A registered attorney or agent of record appointed in compliance with § 1.34(b); (2) A registered attorney or agent not of record who acts in a representative capacity under the provisions of § 1.34(a); (3) An assignee as provided for under § 3.71(b) of this chapter; or (4) All of the applicants (§ 1.41(b)) for patent, unless there is an assignee of the entire interest and such assignee has taken action in the application in accordance with § 3.71 of this chapter.

The statement of unintentional delay was not signed in compliance with 37 CFR 1.33(b) and is unacceptable. There is no indication that Mr. Mosley is registered to practice before the USPTO, the assignee or applicant. Therefore, he cannot sign any statement of unintentional delay or represent the applicant in this matter. If Mr. Mosley is a registered practitioner, he must supply his registration number when signing the petition.

Further correspondence with respect to this matter should be addressed as follows:

By mail: Mail Stop PETITIONS
Commissioner for Patents
Post Office Box 1450
Alexandria, VA 22313-1450

By hand: Customer Service Window
Mail Stop Petitions
Randolph Building
401 Dulany Street
Alexandria, VA 22314

By fax: (571) 273-8300
ATTN: Office of Petitions

Telephone inquiries concerning this decision should be directed to Cynthia Kratz at (571) 272-3286 or in her absence, the undersigned at (571) 272-3217.

Frances Hicks for
Brian Hearn
Petitions Examiner
Office of Petitions

cc: George Landau
6 Stuart Avenue
Narberth, PA 19072

UNITED STATES PATENT AND TRADEMARK OFFICE

Commissioner for Patents
United States Patent and Trademark Office
P.O. Box 1450
Alexandria, VA 22313-1450
www.uspto.gov

COPY MAILED

NOV 29 2005

OFFICE OF PETITIONS

George Landau
6 Stuart Avenue
Narberth, PA 19072

In re Application of
GEORGE LANDAU
Application No.: 10/858,793
Attorney Docket No.:None

: DECISION on PETITION
:
: UNDER 37 CFR 1.137(b)
:

This is a decision on the petition under 37 CFR 1.137(b), filed 14 October 2005 to revive the above-identified application.

The petition is **GRANTED**.

The above-identified application became abandoned for failure to reply in a timely manner to Notice to File Missing Parts mailed August 19, 2004, which set a period for reply of two (2) months. Extensions of time under the provisions of 37 CFR 1.136(a) were available. Accordingly, the above-identified application became abandoned at midnight on October 19, 2004.

The petition satisfies the conditions for revival pursuant to the provisions of 37 CFR 1.137(b) in that (1) the reply in the form of substitute specification, (2) the petition fee; and (3) the required statement of unintentional delay have been received. Accordingly, the reply to the Office action of August 19, 2004 is accepted as having been unintentionally delayed.

The application is being referred to Office of Initial Patent Examination for further processing.

Telephone inquiries concerning this decision should be directed to Cynthia Kratz at (571) 272-3286 or in her absence, the undersigned at (571) 272-3217.

Frances Hicks for
Brian Hearn
Petitions Examiner
Office of Petitions

DuaneMorris®

DUANE MORRIS LLP
30 SOUTH 17TH STREET
PHILADELPHIA, PA 19103-4196
PHONE: 215.979.1000
FAX: 215.979.1020

RECEIVED
CENTRAL FAX CENTER
NOV 27 2007

FACSIMILE TRANSMITTAL SHEET

TO:	Ms. A. Green
FIRM/COMPANY:	USPTO, Attention: Office of Petitions
FACSIMILE NUMBER:	(571) 273-8300
CONFIRMATION TELEPHONE:	
FROM:	Richard A. Paikoff
DIRECT DIAL:	215.979.1853
DATE:	November 27, 2007
USER NUMBER:	1388
FILE NUMBER:	N1280-00020
TOTAL # OF PAGES: (INCLUDING COVERSHEET)	15
MESSAGE:	As you requested by phone conversation today with Steve Koffs of our office, attached is a Communication Requesting Reinstatement Of Our Petition Requesting Correction of Assignee Name, your correspondence of 10/30/2007 and copies of our e-filings of 9/28/2007. Please let us know if you need anything else from us.

NOTE: Original will not follow

CONFIDENTIALITY NOTICE

THIS FACSIMILE TRANSMISSION IS PRIVILEGED AND CONFIDENTIAL AND IS INTENDED ONLY FOR THE REVIEW OF THE PARTY TO WHOM IT IS ADDRESSED. IF YOU HAVE RECEIVED THIS TRANSMISSION IN ERROR, PLEASE IMMEDIATELY TELEPHONE THE SENDER ABOVE TO ARRANGE FOR ITS RETURN, AND IT SHALL NOT CONSTITUTE WAIVER OF THE ATTORNEY-CLIENT PRIVILEGE.

If there is a problem with this transmission, please call us as soon as possible at 215.979.1021.

RECEIVED
CENTRAL FAX CENTER

NOV 27 2007

Attorney Docket No. TSMC2003-0801(N1280-00020

PATENT

IN THE UNITED STATES PATENT AND TRADEMARK OFFICE

In re Application of: **Chung-Hui Chen**

U.S. Patent No.: **7,242,558** Examiner: **Boris Benenson**

Issued: **07/10/2007** Group Art Unit: **2836**

For: **ESD PROTECTION MODULE TRIGGERED BY BJT PUNCH-THROUGH**

I CERTIFY THAT THIS CORRESPONDENCE IS BEING FAXED TO (571) 273-8300 OF THE THE UNITED STATES PATENT AND TRADEMARK OFFICE ON NOVEMBER 27, 2007

Richard A. Paikoff

SIGNATURE:

COMMUNICATION REQUESTING REINSTATEMENT OF OUR PETITION REQUESTING CORRECTION OF ASSIGNEE NAME

Attention: Mail Stop Petitions
Commissioner for Patents
P.O. Box 1450
Alexandria, VA 22313-1450

Sir:

Attached is a copy of a communication dated October 30, 2007 from Ms. Cecelia Newman, Decisions & Certificates of Correction Branch indicating our Petition and Request for Certificate of Correction e-filed September 28, 2007 has been dismissed. Also attached are copies of our e-filings of September 28, 2007 of our Petition Requesting Correction of Assignee Name under 37 C.F.R. 3.81 and our Request for Certificate of Correction. Petition fee of $130 and Request for Certificate of Correction Fee of $100 have both been paid.

DM2\1312825.1

Attorney Docket No. TSMC2003-0801(N1280-00020

Please approve the Petition and issue the requested Certificate of Correction as soon as possible.

The Assistant Commissioner for Patents is hereby authorized to charge any additional fees or credit any excess payment that may be associated with this communication to Deposit Account 04-1679.

Respectfully submitted,

Date: November 27, 2007

Richard A. Paikoff
Reg. No. 34,892

Attorney for Patentee

DUANE MORRIS LLP
30 South 17th Street
Philadelphia, PA 19103-4196
(215) 979-1853 (Telephone)
(215) 979-1020 (Fax)

DM2\1312825.1

PAGE 3/15 * RCVD AT 11/27/2007 4:54:41 PM [Eastern Standard Time] * SVR:USPTO-EFXRF-2/7 * DNIS:2738300 * CSID: * DURATION (mm-ss):04-48

RECEIVED
CENTRAL FAX CENTER
NOV 27 2007

COPY

RECEIVED
NOV 12 2007
BY:

By hand: Customer Service Window
Randolph Building
401 Dulany Street
Alexandria, VA 22314

By fax: 571-273-8300
ATTN: Office of Petitions

If a fee (currently $100) was previously submitted for consideration of a Request for Certificate of Correction, under CFR 1.323, to correct assignment data, no additional fee is required.

Any inquiry concerning this communication should be directed to Ms. A. Green at (703) 308-9380 ext. 123.

For Cecelia Newman
Decisions & Certificates
of Correction Branch
(703) 308-9390 or (703) 308-9380 Ext. 123

Richard A. Palkoff, Duane Morris LLP
30 South 17th Street
Philadelphia, PA 19103

CBN/arg

11/20/2007 - CALL TO MS. GREEN & LEFT MESSAGE

11/27/2007 - CALL BY STEVE

UNITED STATES PATENT AND TRADEMARK OFFICE

Commissioner for Patents
United States Patent and Trademark Office
P.O. Box 1450
Alexandria, VA 22313-1450
www.uspto.gov

RECEIVED
CENTRAL FAX CENTER
NOV 27 2007

Date : October 30, 2007

Patent No. : 7,242,558
Inventor(s) : Chung-Hui Chen
Issued : July 10, 2007
Title : ESD PROTECTION MODULE TRIGGERED BY BJT PUNCH-THROUGH
Docket No. : TSMC2003-0801(N1280-00020

Re: Request for Certificate of Correction

Consideration has been given your request for the issuance of a certificate of correction for the above-identified patent under the provisions of 37 CFR 1.322 and/or 1.323.

Assignees' names and addresses (assignment data) printed in a patent are based *solely* on information supplied in the appropriate space for identifying the assignment data, i.e., item 3 of the Fee(s) Transmittal Form PTOL-85B. After payment of the issue fee, correction of assignment data submitted on the PTOL-85B can only be done by Certificate of Correction under 37 CFR 1.323, with a request under 37 CFR 3.81(b).

A request for a patent to be corrected to state the name of the assignee must:

A. state that the assignment was submitted for recordation as set forth in 37 CFR 3.11 before issuance of the patent;

B. include a request for a certificate of correction under 37 CFR 1.323 along with the fee set forth in 37 CFR 1.20(a); and

C. include the processing fee set forth in 37 CFR 1.17(i).

If the request is granted, Certificates of Correction Branch will be notified that a Certificate of Correction may be issued.

See Manual of Patent Examining Procedure, Section 1481.01 (Rev. 3) (Oct. 2005).

Applicant has not included items A and or C above, accordingly, the request for Certificate of Correction to add or change the assignee data is dismissed.

Any request under 37 CFR 3.81(b) should be directed to the following address or facsimile number:

By mail: Mail Stop PETITIONS
Commissioner for Patents
Post Office Box 1450
Alexandria, VA 22313-1450

Patent Electronic Filing

Acknowledgement Receipt

The USPTO has received your submission at **16:17:56** Eastern Time on **28-SEP-2007** by Deposit Account: 041679.

$ **130** fee paid by e-Filer via *RAM* with Confirmation Number: 4690.

You have also pre-authorized the following payments from your USPTO Deposit Account:

Charge any Additional Fees required under 37 C.F.R. Section 1.16 and 1.17

RECEIVED
CENTRAL FAX CENTER
NOV 27 2007

eFiled Application Information

EFS ID	2257724
Application Number	10858798
Confirmation Number	5659
Title	ESD PROTECTION MODULE TRIGGERED BY BJT PUNCH-THROUGH
First Named Inventor	Chung-Hui Chen
Customer Number or Correspondence Address	8933
Filed By	Steven E. Koffs/Chris Lambriodes
Attorney Docket Number	TSMC2003-0801(N1280-00020
Filing Date	01-JUN-2004
Receipt Date	28-SEP-2007
Application Type	Utility under 35 USC 111(a)

COPY

Application Details

Submitted Files	Page Count	Document Description	File Size	Warnings
2003-0801-petitionrequestingcorrectionofassigneename.pdf	3	Petition for review by the Office of Petitions.	290286 bytes	PASS
fee-info.pdf	2	Fee Worksheet (PTO-06)	8204 bytes	PASS

This Acknowledgement Receipt evidences receipt on the noted date by the USPTO of the indicated documents, characterized by the applicant, and including page counts, where applicable. It serves as evidence of receipt similar to a Post Card, as described in MPEP 503.

New Applications Under 35 U.S.C. 111

If a new application is being filed and the application includes the necessary components for a filing date (see 37 CFR 1.53(b)-(d) and MPEP 506), a Filing Receipt (37 CFR 1.54) will be issued in due course and the date shown on this Acknowledgement Receipt will establish the filing date of the application.

National Stage of an International Application under 35 U.S.C. 371

If a timely submission to enter the national stage of an international application is compliant with the conditions of 35 U.S.C. 371 and other applicable requirements a Form PCT/DO/EO/903 indicating acceptance of the application as a national stage submission under 35 U.S.C. 371 will be issued in addition to the Filing Receipt, in due course.

New International Application Filed with the USPTO as a Receiving Office

If a new international application is being filed and the international application includes the necessary components for an international filing date (see PCT Article 11 and MPEP 1810), a Notification of the International Application

Number and of the International Filing Date (Form PCT/RO/105) will be issued in due course, subject to prescriptions concerning national security, and the date shown on this Acknowledgement Receipt will establish the international filing date of the application.

If you need help:

- *Call the Patent Electronic Business Center at (866) 217-9197 (toll free) or e-mail EBC@uspto.gov for specific questions about Patent e-Filing.*
- *Send general questions about USPTO programs to the USPTO Contact Center (UCC).*
- *If you experience technical difficulties or problems with this application, please report them via e-mail to Electronic Business Support or call 1 800-786-9199.*

Attorney Docket No. TSMC2003-0801(N1280-00020

PATENT

IN THE UNITED STATES PATENT AND TRADEMARK OFFICE

RECEIVED
CENTRAL FAX CENTER
NOV 27 2007

In re Application of: **Chung-Hui Chen**

U.S. Patent No.: **7,242,558** Examiner: **Boris Benenson**

Issued: **07/10/2007** Group Art Unit: **2836**

For: **ESD PROTECTION MODULE TRIGGERED BY BJT PUNCH-THROUGH**

PETITION REQUESTING CORRECTION OF ASSIGNEE NAME

Attention: Mail Stop Petitions
Commissioner for Patents
P.O. Box 1450
Alexandria, VA 22313-1450

Sir:

This Petition Requesting Correction of Assignee Name is being filed pursuant to 37 C.F.R. 3.81 and concurrently with a Request for Certificate of Correction. Due to a clerical error, Patentee inadvertently indicated Taiwan Semiconductor Co., Ltd. as the Assignee Name in Item 3 of Issue Fee Transmittal Form PTOL-85B when paying the Issue Fee.

Please correct the Assignee Name to Taiwan Semiconductor Manufacturing Co., Ltd. The correct name of the Assignee Taiwan Semiconductor Manufacturing Co., Ltd. was submitted for recordation according to 37 C.F.R. 3.11 prior to issuance of the above-identified patent, and is recorded at Reel/Frame 015422/0662. As indicated in the Patent Assignment Abstract of Title (copy attached) retrieved from the USPTO website, the assignment was recorded on June 1, 2004. The appropriate fees required by 37 C.F.R. 1.20(a) and 37 C.F.R 1.17(i), are hereby paid along with the original Certificate of Correction filed concurrently herewith.

It is respectfully requested that the correction of assignee name is accepted and that this paper be forwarded to the Certificate of Correction Branch, for issuance of the

DMZ\1266445.1

PAGE 8/15 * RCVD AT 11/27/2007 4:54:41 PM [Eastern Standard Time] * SVR:USPTO-EFXRF-2/7 * DNIS:2738300 * CSID: * DURATION (mm-ss):04-48

Attorney Docket No. TSMC2003-0801(N1280-00020

Certificate of Correction as filed in conjunction herewith, and for recordation in the records of the Patent and Trademark Office.

The Assistant Commissioner for Patents is hereby authorized to charge the $130 petition fee and any additional fees or credit any excess payment that may be associated with this communication to Deposit Account 04-1679.

Respectfully submitted,

Date: September 28, 2007

Richard A. Paikoff

Richard A. Paikoff
Reg. No. 34,892

Attorney for Patentee

DUANE MORRIS LLP
30 South 17th Street
Philadelphia, PA 19103-4196
(215) 979-1853 (Telephone)
(215) 979-1020 (Fax)

DMZ\1266445.1

PAGE 9/15 * RCVD AT 11/27/2007 4:54:41 PM [Eastern Standard Time] * SVR:USPTO-EFXRF-2/7 * DNIS:2738300 * CSID: * DURATION (mm-ss):04-48

10/858,798 ESD PROTECTION MODULE TRIGGERED BY BJT PUNCH-THROUGH 09-27-2007::13:35:38

Patent Assignment Abstract of Title

Total Assignments: 1
Application #: 10858798 **Filing Dt:** 06/01/2004 **Patent #:** 7242558 **Issue Dt:** 07/10/2007
PCT #: NONE **Publication #:** US20050264968 **Pub Dt:** 12/01/2005
Inventor: Chung-Hui Chen
Title: ESD PROTECTION MODULE TRIGGERED BY BJT PUNCH-THROUGH

Assignment: 1
Reel/Frame: 015422 / 0662 **Received:** 06/09/2004 **Recorded:** 06/01/2004 **Mailed:** 12/08/2004 **Pages:** 3
Conveyance: ASSIGNMENT OF ASSIGNORS INTEREST (SEE DOCUMENT FOR DETAILS). **Exec Dt:** 05/27/2004
Assignor: CHEN, CHUNG-HUI
Assignee: TAIWAN SEMICONDUCTOR MANUFACTURING CO., LTD.
NO. 8, LI-HSIN ROAD 6
SCIENCE-BASED INDUSTRIAL PARK
HSIN-CHU 300-7, TAIWAN

Correspondent: DUANE MORRIS LLP
HOWARD CHEN
ONE MARKET STREET
SPEAR TOWER, SUITE 2000
SAN FRANCISCO, CA 94105-1104

Search Results as of: 09/27/2007 13:35:31 PM

Disclaimer:
Assignment information on the assignment database reflects assignment documents that have been actually recorded.
If the assignment for a patent was not recorded, the name of the assignee on the patent application publication or patent may be different.
If you have any comments or questions concerning the data displayed, contact OPR / Assignments at 571-272-3350

Close Window

Patent Electronic Filing

Acknowledgement Receipt

The USPTO has received your submission at **16:20:48** Eastern Time on **28-SEP-2007** by Deposit Account: 041679.

$ **100** fee paid by e-Filer via *RAM* with Confirmation Number: 4737.

You have also pre-authorized the following payments from your USPTO Deposit Account:

Charge any Additional Fees required under 37 C.F.R. Section 1.16 and 1.17

RECEIVED
CENTRAL FAX CENTER
NOV 27 2007

eFiled Application Information

EFS ID	2257764
Application Number	10858798
Confirmation Number	5659
Title	ESD PROTECTION MODULE TRIGGERED BY BJT PUNCH-THROUGH
First Named Inventor	Chung-Hui Chen
Customer Number or Correspondence Address	8933
Filed By	Steven E. Koffs/Chris Lambriodes
Attorney Docket Number	TSMC2003-0801(N1280-00020
Filing Date	01-JUN-2004
Receipt Date	28-SEP-2007
Application Type	Utility under 35 USC 111(a)

COPY

Application Details

Submitted Files	Page Count	Document Description	File Size	Warnings
2003-0801-requestforcertificateofcorrection.pdf	3	Request for Certificate of Correction	327386 bytes	PASS
fee-info.pdf	2	Fee Worksheet (PTO-06)	8185 bytes	PASS

This Acknowledgement Receipt evidences receipt on the noted date by the USPTO of the indicated documents, characterized by the applicant, and including page counts, where applicable. It serves as evidence of receipt similar to a Post Card, as described in MPEP 503.

New Applications Under 35 U.S.C. 111

If a new application is being filed and the application includes the necessary components for a filing date (see 37 CFR 1.53(b)-(d) and MPEP 506), a Filing Receipt (37 CFR 1.54) will be issued in due course and the date shown on this Acknowledgement Receipt will establish the filing date of the application.

National Stage of an International Application under 35 U.S.C. 371

If a timely submission to enter the national stage of an international application is compliant with the conditions of 35 U.S.C. 371 and other applicable requirements a Form PCT/DO/EO/903 indicating acceptance of the application as a national stage submission under 35 U.S.C. 371 will be issued in addition to the Filing Receipt, in due course.

New International Application Filed with the USPTO as a Receiving Office

If a new international application is being filed and the international application includes the necessary components for an international filing date (see PCT Article 11 and MPEP 1810), a Notification of the International Application Number and of the International Filing Date (Form PCT/RO/105) will be issued in due course, subject to prescriptions

concerning national security, and the date shown on this Acknowledgement Receipt will establish the international filing date of the application.

If you need help:

- *Call the Patent Electronic Business Center at (866) 217-9197 (toll free) or e-mail EBC@uspto.gov for specific questions about Patent e-Filing.*
- *Send general questions about USPTO programs to the USPTO Contact Center (UCC).*
- *If you experience technical difficulties or problems with this application, please report them via e-mail to Electronic Business Support or call 1 800-786-9199.*

Attorney Docket No.: TSMC2003-0801(N1280-00020)

IN THE UNITED STATES PATENT AND TRADEMARK OFFICE

RECEIVED
CENTRAL FAX CENTER
NOV 27 2007

Patent Number: 7,242,558

Serial No.: 10/858,798

Issued: July 10, 2007

Inventor(s): Chung-Hui Chen

Title: ESD PROTECTION MODULE TRIGGERED BY BJT PUNCH-THROUGH

Attention Certificate of Corrections Branch
Commissioner for Patents
P.O. Box 1450
Alexandria, VA 22313-1450

REQUEST FOR CERTIFICATE OF CORRECTION OF PATENT FOR APPLICANTS' MISTAKE (37 C.F.R. 1.323)

Dear Sir:

1. Attached is Form PTO/SB/44 wherein the errors occurring in the printed patent are noted by column and line number.

2. The exact page and line number where the correct language appears in the application file is:

Amendment 01/31/2007, Page 2, Claim 1, Line 11.

Amendment 01/31/2007, Page 3, Claim 4, Line 4.

Amendment 01/31/2007, Page 3, Claim 4, Line 8.

Amendment 01/31/2007, Page 5, Claim 10, Line 7.

Amendment 01/31/2007, Page 5, Claim 10, Line 8.

PAGE 13/15 * RCVD AT 11/27/2007 4:54:41 PM [Eastern Standard Time] * SVR:USPTO-EFXRF-2/7 * DNIS:2738300 * CSID: * DURATION (mm-ss):04-48

Attorney Docket No.: TSMC2003-0801(N1280-00020)

Amendment 01/31/2007, Page 6, Claim 16, Line 12.

3. It is noted also that errors not due to the fault of the Patentee appear in this patent. The errors are of a clerical nature or character, as more fully described below, and occurred in good faith. Correction thereof does not involve such changes in the patent as would constitute new matter or would require re-examination. A certificate of correction is requested.

4. The Patentee inadvertently typed "Taiwan Semiconductor Co., Ltd." instead of Taiwan Semiconductor Manufacturing Co., Ltd. In the Assignee Name section of the Issue Fee Transmittal papers. The correct Assignee name is indicated in the Notice of Recordation of Assignment Document as recorded on 06/01/2004 on Reel 015422, Frame 0662. A Petition Requesting Correction of Assignment Name is being filed concurrently herewith.

3. Please send the Certificate to:

Name: Steven E. Koffs, Esquire
DUANE MORRIS LLP
30 South 17th Street
Philadelphia, Pennsylvania 19103

4. Please charge Deposit Account 04-1679 the $100.00 fee. The Commissioner for Patents is hereby authorized to charge any additional fees or credit any excess payment that may be associated with this communication to deposit account 04-1679.

Respectfully submitted,

Date: 9/28/07

Richard A. Paikoff
Registration No. 34,892

Attorney for Patentee

DUANE, MORRIS LLP
30 South 17th Street
Philadelphia, Pennsylvania 19103
(215) 979-1853 (Telephone)
(215) 979-1020 (Fax)

DM2\1266457.1

PAGE 14/15 * RCVD AT 11/27/2007 4:54:41 PM [Eastern Standard Time] * SVR:USPTO-EFXRF-2/7 * DNIS:2738300 * CSID: * DURATION (mm-ss):04-48

PTO/SB/44 (04-05)
Approved for use through 04/30/2007. OMB 0651-0033
U.S. Patent and Trademark Office; U.S. DEPARTMENT OF COMMERCE
Under the Paperwork Reduction Act of 1995, no persons are required to respond to a collection of information unless it displays a valid OMB control number.
(Also Form PTO-1050)

UNITED STATES PATENT AND TRADEMARK OFFICE
CERTIFICATE OF CORRECTION

PATENT NO. : 7,242,558

APPLICATION NO.: 10/858,798

ISSUE DATE : July 10, 2007

INVENTOR(S) : Chung-Hui Chen

It is certified that an error appears or errors appear in the above-identified patent and that said Letters Patent is hereby corrected as shown below:

(73) Assignee: Delete "Taiwan Semiconductor Co., Ltd.," and insert therefore - - Taiwan Semiconductor Manufacturing Co., Ltd. - -.

Column 6, line 23, delete "tuned" and insert therefore - - turned - - .

Column 6, line 40, delete "node:" and insert therefore - - node; - - .

Column 6, line 45, delete "node." and insert therefore - - node, - - .

Column 7, line 40, delete "transistor:" and insert therefore - - transistor; - - .

Column 7, line 42, delete "node:" and insert therefore - - node; - - .

Column 8, line 30, delete "configured," and insert therefore - - configured - - .

MAILING ADDRESS OF SENDER (Please do not use customer number below):

Richard A. Palkoff, Duane Morris LLP
30 South 17th Street
Philadelphia, PA 19103

This collection of information is required by 37 CFR 1.322, 1.323, and 1.324. The information is required to obtain or retain a benefit by the public which is to file (and by the USPTO to process) an application. Confidentiality is governed by 35 U.S.C. 122 and 37 CFR 1.14. This collection is estimated to take 1.0 hour to complete, including gathering, preparing, and submitting the completed application form to the USPTO. Time will vary depending upon the individual case. Any comments on the amount of time you require to complete this form and/or suggestions for reducing this burden, should be sent to the Chief Information Officer, U.S. Patent and Trademark Office, U.S. Department of Commerce, P.O. Box 1450, Alexandria, VA 22313-1450. DO NOT SEND FEES OR COMPLETED FORMS TO THIS ADDRESS. SEND TO: Attention Certificate of Corrections Branch, Commissioner for Patents, P.O. Box 1450, Alexandria, VA 22313-1450.

If you need assistance in completing the form, call 1-800-PTO-9199 and select option 2.

UNITED STATES PATENT AND TRADEMARK OFFICE

Commissioner for Patents
United States Patent and Trademark Office
P.O. Box 1450
Alexandria, VA 22313-1450
www.uspto.gov

DUANE MORRIS, LLP
IP DEPARTMENT
30 SOUTH 17TH STREET
PHILADELPHIA, PA 19103-4196

COPY MAILED

MAR 26 2008

OFFICE OF PETITIONS

In re Patent No. 7,242,558	:	
Issue Date: July 10, 2007	:	
Application No. 10/858,798	:	ON PETITION
Filed: June 1, 2004	:	
Attorney Docket No. TSMC2003-0801	:	

This is a decision on the petition filed September 28, 2007, which is being treated as a request under 37 CFR 3.81(b)[1] to correct the name of the assignee on the front page of the above-identified patent by way of a Certificate of Correction.

The request is **GRANTED**.

Telephone inquiries concerning this decision may be directed to the April M. Wise at (571) 272-1642. Inquiries regarding the issuance of a certificate of correction should be directed to the Certificate of Correction Branch at (571) 272-4200.

The Certificates of Correction Branch will be notified of this decision granting the petition under 37 CFR 3.81(b) and directing issuance of the requested Certificate of Correction.

Irvin Dingle
Petitions Examiner
Office of Petitions

[1] *See* MPEP 1309, subsection II; and Official Gazette of June 22, 2004.

IN THE UNITED STATES PATENT AND TRADEMARK OFFICE

Patent Number: 7,242,558

Serial No.: 10/858,798

Issued: July 10, 2007

Inventor(s): Chung-Hui Chen

Title: ESD PROTECTION MODULE TRIGGERED BY BJT PUNCH-THROUGH

Attention Certificate of Corrections Branch
Commissioner for Patents
P.O. Box 1450
Alexandria, VA 22313-1450

REQUEST FOR CERTIFICATE OF CORRECTION OF PATENT FOR APPLICANTS' MISTAKE (37 C.F.R. 1.323)

Dear Sir:

1. Attached is Form PTO/SB/44 wherein the errors occurring in the printed patent are noted by column and line number.

2. The exact page and line number where the correct language appears in the application file is:

Amendment 01/31/2007, Page 2, Claim 1, Line 11.

Amendment 01/31/2007, Page 3, Claim 4, Line 4.

Amendment 01/31/2007, Page 3, Claim 4, Line 8.

Amendment 01/31/2007, Page 5, Claim 10, Line 7.

Amendment 01/31/2007, Page 5, Claim 10, Line 8.

Adjustment date: 03/26/2008 CKHLOK 10858798
10/01/2007 INTEFSW 00004737 041679
01 FC:1811 100.00 CR
Adjustment date: 03/26/2008 CKHLOK 10858798
10/01/2007 INTEFSW 00004690 041679
01 FC:1464 130.00 CR
03/26/2008 CKHLOK 00000010 041679 7242558
01 FC:1811 100.00 DA
02 FC:1808 130.00 DA

Amendment 01/31/2007, Page 6, Claim 16, Line 12.

3. It is noted also that errors not due to the fault of the Patentee appear in this patent. The errors are of a clerical nature or character, as more fully described below, and occurred in good faith. Correction thereof does not involve such changes in the patent as would constitute new matter or would require re-examination. A certificate of correction is requested.

4. The Patentee inadvertently typed "Taiwan Semiconductor Co., Ltd." instead of Taiwan Semiconductor Manufacturing Co., Ltd. In the Assignee Name section of the Issue Fee Transmittal papers. The correct Assignee name is indicated in the Notice of Recordation of Assignment Document as recorded on 06/01/2004 on Reel 015422, Frame 0662. A Petition Requesting Correction of Assignment Name is being filed concurrently herewith.

3. Please send the Certificate to:

Name: Steven E. Koffs, Esquire
DUANE MORRIS LLP
30 South 17th Street
Philadelphia, Pennsylvania 19103

4. Please charge Deposit Account 04-1679 the $100.00 fee. The Commissioner for Patents is hereby authorized to charge any additional fees or credit any excess payment that may be associated with this communication to deposit account 04-1679.

Respectfully submitted,

Date: 9/28/07

Richard A. Paikoff
Registration No. 34,892

Attorney for Patentee

DUANE, MORRIS LLP
30 South 17th Street
Philadelphia, Pennsylvania 19103
(215) 979-1853 (Telephone)
(215) 979-1020 (Fax)

PTO/SB/44 (04-05)
Approved for use through 04/30/2007. OMB 0651-0033
U.S. Patent and Trademark Office; U.S. DEPARTMENT OF COMMERCE
Under the Paperwork Reduction Act of 1995, no persons are required to respond to a collection of information unless it displays a valid OMB control number.
(Also Form PTO-1050)

UNITED STATES PATENT AND TRADEMARK OFFICE
CERTIFICATE OF CORRECTION

PATENT NO. : 7,242,558

APPLICATION NO. : 10/858,798

ISSUE DATE : July 10, 2007

INVENTOR(S) : Chung-Hui Chen

It is certified that an error appears or errors appear in the above-identified patent and that said Letters Patent is hereby corrected as shown below:

(73) Assignee: Delete "Taiwan Semiconductor Co., Ltd.," and insert therefore - - Taiwan Semiconductor Manufacturing Co., Ltd. - -.

Column 6, line 23, delete "tuned" and insert therefore - - turned - - .

Column 6, line 40, delete "node:" and insert therefore - - node; - - .

Column 6, line 45, delete "node." and insert therefore - - node, - - .

Column 7, line 40, delete "transistor:" and insert therefore - - transistor; - - .

Column 7, line 42, delete "node:" and insert therefore - - node; - - .

Column 8, line 30, delete "configured," and insert therefore - - configured - - .

MAILING ADDRESS OF SENDER (Please do not use customer number below):

Richard A. Paikoff, Duane Morris LLP
30 South 17th Street
Philadelphia, PA 19103

This collection of information is required by 37 CFR 1.322, 1.323, and 1.324. The information is required to obtain or retain a benefit by the public which is to file (and by the USPTO to process) an application. Confidentiality is governed by 35 U.S.C. 122 and 37 CFR 1.14. This collection is estimated to take 1.0 hour to complete, including gathering, preparing, and submitting the completed application form to the USPTO. Time will vary depending upon the individual case. Any comments on the amount of time you require to complete this form and/or suggestions for reducing this burden, should be sent to the Chief Information Officer, U.S. Patent and Trademark Office, U.S. Department of Commerce, P.O. Box 1450, Alexandria, VA 22313-1450. DO NOT SEND FEES OR COMPLETED FORMS TO THIS ADDRESS. SEND TO: **Attention Certificate of Corrections Branch, Commissioner for Patents, P.O. Box 1450, Alexandria, VA 22313-1450.**

If you need assistance in completing the form, call 1-800-PTO-9199 and select option 2.

UNITED STATES PATENT AND TRADEMARK OFFICE

UNITED STATES DEPARTMENT OF COMMERCE
United States Patent and Trademark Office
Address: COMMISSIONER FOR PATENTS
P.O. Box 1450
Alexandria, Virginia 22313-1450
www.uspto.gov

THE LAW OFFICES OF BRADLEY J. BEREZNAK
800 WEST EL CAMINO REAL
SUITE 180
MOUNTAIN VIEW, CA 94040

Mail Date: 07/06/2010

Applicant	: Ali Sajassi	: DECISION ON REQUEST FOR
Patent Number	: 7644317	: RECALCULATION of PATENT
Issue Date	: 01/05/2010	: TERM ADJUSTMENT IN VIEW
Application No	: 10/858,810	: OF WYETH AND NOTICE OF INTENT TO
Filed	: 06/02/2004	: ISSUE CERTIFICATE OF CORRECTION
		:

The Request for Recalculation is **GRANTED** to the extent indicated.

The patent term adjustment has been determined to be **1617** days. The USPTO will *sua sponte* issue a certificate of correction reflecting the amount of PTA days determined by the recalculation.

Prior to the issuance of the certificate of correction, the USPTO will afford patentee an opportunity to be heard and request reconsideration. Accordingly, patentee has **one month or thirty (30) days**, whichever is longer, to file a request for reconsideration of this patent term adjustment calculation. See 35 U.S.C. 154(b)(3)(B)(ii) and 37 CFR 1.322(a)(4). No extensions of time will be granted under 37 CFR 1.136.

Patentee should use document code PET.OP if electronically filing a request for reconsideration of this patent term adjustment calculation. The patentee must also include the information required by 37 CFR 1.705(b)(2) and the fee required by 37 CFR 1.18(e). If patentee does not file a timely request for reconsideration of this patent term adjustment calculation including the information required by 37 CFR 1.705(b)(2) and the fee required by 37 CFR 1.18(e), the USPTO will issue a certificate of correction reflecting the PTA determination noted above.

Patentee should be aware that in order to preserve the right to review in the United States District Court for the District of Columbia of the USPTO patent term adjustment determination, patentee must ensure that he or she also take the steps required under 35 U.S.C. 154(b)(4)(A) in a timely manner. Nothing in the request for recalculation should be construed as providing an alternative time frame for commencing a civil action under 35 U.S.C. 154(b)(4)(A).

Any questions concerning this decision should be directed to the Office of Patent Legal Administration at 571-272-7702.

UNITED STATES PATENT AND TRADEMARK OFFICE

Commissioner for Patents
United States Patent and Trademark Office
P.O. Box 1450
Alexandria, VA 22313-1450
www.uspto.gov

MAILED

SEP 24 2009

OFFICE OF PETITIONS

DIGIMARC CORPORATION
9405 SW GEMINI DRIVE
BEAVERTON OR 97008

In re Patent No. 7,539,325
Issued: May 26, 2009
Application No. 10/858,820
Filed: June 1, 2004
Attorney Docket No. P0993

: DECISION ON APPLICATION
: FOR PATENT TERM ADJUSTMENT

This is a decision on the "APPLICATION FOR PATENT TERM ADJUSTMENT (Request for Reconsideration of PTO's Patent Term Adjustment Determination) (37 CFR 1.705(d))" filed May 29, 2009, requesting that the patent term adjustment determination for the above-identified patent be changed from six hundred seventy two (672) days to one thousand two hundred thirty-six (1236) days.

The request for reconsideration of patent term adjustment is **DISMISSED**.

On May 26, 2009, the above-identified application matured into US Patent No. 7,539,325 with a patent term adjustment of 672 days. This request for reconsideration of patent term adjustment was timely filed within two months of the issue date of the patent. See 37 CFR 1.705(d).

The Office acknowledges submission of the $200.00 fee set forth in 37 CFR 1.18(e). No additional fees are required.

Patentees request recalculation of the patent term adjustment based on the decision in Wyeth v. Dudas, 580 F. Supp. 2d 138, 88 U.S.P.Q. 2d 1538 (D.D.C. 2008). Patentees assert that in view of the decision in Wyeth, they are entitled to an additional 565 days of patent term adjustment due to exceeding three year pendency.

The 565-day period is calculated based on the application having been filed under 35 U.S.C. 111(a) on June 1, 2004 and a request for continued examination (RCE) having being filed on December 17, 2008. The filing of an RCE cuts-off the applicants' ability to accumulate any additional patent term adjustment against the three-year pendency provision, but does not otherwise affect patent term adjustment. 37 CFR § 1.703(b)(1).

Patentees assert that in addition to this 565 day period, they are entitled to a period of adjustment due to examination delay of 740 days pursuant to 37 CFR 1.702(a)(1) and (a)(2).

Under 37 CFR 1.703(f), patentees are entitled to a period of patent term adjustment equal to the period of delays based on the grounds set forth in 37 CFR 1.702 reduced by the period of time equal to the period of time during which patentees failed to engage in reasonable efforts to conclude prosecution pursuant to 37 CFR 1.704. In other words, it is the period of Office delay reduced by the period of applicant delay. Patentees do not dispute the period of reduction of 68 days for applicant delay.

Patentees agree that the total period of Office delay is the sum of the period of Three Years Delay to the filing of the RCE (565 days) and the period of Examination Delay (740 days) to the extent that these periods of delay are not overlapping. Patentees contend that the period of delay under 37 CFR 1.702(a) overlaps with the period of delay under 37 CFR 1.702(b) by one (1) day.

Accordingly, patentees submit that the total period of Office Delay is 1304 days, which is the sum of the period of Three Year Delay (565 days) and the period of Examination Delay (740 days), reduced by the period of overlap (1 day). As such, patentees assert entitlement to a patent term adjustment of 1236 days (565 + 740 reduced by 1 overlap - 68 for applicant delay).

The Office agrees that as of the filing of the RCE on December 17, 2008, the application was pending three years and 565 days after its filing date. The Office agrees that the action detailed above was not taken within the specified time frame, and thus, a reduction of 740 days for examination delay was entered. At issue is whether patentees should accrue 565 days of patent term adjustment for the Office taking in excess of three years to issue the patent, as well as 740 days for Office failure to take a certain action within a specified time frame (or examination delay).

The Office contends that 565 days overlap. Patentees' calculation of the period of overlap is inconsistent with the Office's interpretation of this provision. 35 U.S.C. 154(b)(2)(A) limits the adjustment of patent term, as follows:

> to the extent that the periods of delay attributable to grounds specified in paragraph (1) overlap, the period of any adjustment granted under this subsection shall not exceed the actual number of days the issuance of the patent was delayed.

Likewise, 35 CFR 1.703(f) provides that:

> To the extent that periods of delay attributable to the grounds specified in § 1.702 overlap, the period of adjustment granted under this section shall not exceed the actual number of days the issuance of the patent was delayed.

As explained in *Explanation of 37 CFR 1.703(f) and of the United States Patent and Trademark Office Interpretation of 35 U.S.C. 154(b)(2)(A)*, 69 Fed. Reg. 34283 (June 21, 2004), the Office interprets 35 U.S.C. 154(b)(2)(A) as permitting either patent term adjustment under 35 U.S.C. 154(b)(1)(A)(i)-(iv), or patent term adjustment under 35 U.S.C. 154(b)(1)(B), but not as permitting patent term adjustment under both 35 U.S.C. 154(b)(1)(A)(i)-(iv) and 154(b)(1)(B). Accordingly, the Office implements the overlap provision as follows:

> If an application is entitled to an adjustment under 35 U.S.C. 154(b)(1)(B), the entire period during which the application was pending (except for periods excluded under 35 U.S.C. 154(b)(1)(B)(i)-(iii)), and not just the period beginning three years after the actual filing date of the application, is the period of delay under 35 U.S.C. 154(b)(1)(B) in determining whether periods of delay overlap under 35 U.S.C. 154(b)(2)(A). Thus, any days of delay for Office issuance of the patent more than 3 years after the filing date of the application, which overlap with the days of patent term adjustment accorded prior to the issuance of the patent will not result in any additional patent term adjustment. See 35 U.S.C. 154(b)(1)(B), 35 U.S.C. 154(b)(2)(A), and 37 CFR § 1.703(f). See *Changes to Implement Patent Term Adjustment Under Twenty Year Term; Final Rule*, 65 Fed. Reg. 56366 (Sept. 18, 2000). See also *Revision of Patent Term Extension and Patent Term Adjustment Provisions; Final Rule*, 69 Fed. Reg. 21704 (April 22, 2004), 1282 Off. Gaz. Pat. Office 100 (May 18, 2004). See also *Explanation of 37 CFR 1.703(f) and of the United States Patent and Trademark Office Interpretation of 35 U.S.C. 154(b)(2)(A),* 69 Fed. Reg. 34283 (June 21, 2004).

The current wording of § 1.703(f) was revised in response to the misinterpretation of this provision by a number of Patentees. The rule was slightly revised to more closely track the corresponding language of 35 U.S.C. 154(b)(2)(A). The relevant portion differs only to the extent that the statute refers back to provisions of the statute whereas the rule refers back to sections of the rule. This was not a substantive change to the rule nor did it reflect a change of the Office's interpretation of 35 U.S.C. 154(b)(2)(A). As stated in the *Explanation of 37 CFR 1.703(f) and of the United States Patent and Trademark Office Interpretation of 35 U.S.C. 154(b)(2)(A)*, the Office has consistently taken the position that if an application is entitled to an adjustment under the three-year pendency provision of 35 U.S.C. 154(b)(1)(B), the entire period during which the application was pending before the Office (except for periods excluded under 35 U.S.C.

154(b)(1)(B)(i)-(iii)), and not just the period beginning three years after the actual filing date of the application, is the relevant period under 35 U.S.C. 154(b)(1)(B) in determining whether periods of delay "overlap" under 35 U.S.C. 154(b)(2)(A).

This interpretation is consistent with the statute. Taken together the statute and rule provide that to the extent that periods of delay attributable to grounds specified in 35 U.S.C. 154(b)(1) and in corresponding § 1.702 overlap, the period of adjustment granted shall not exceed the actual number of days the issuance of the patent was delayed. The grounds specified in these sections cover the A) guarantee of prompt Patent and Trademark Office responses, B) guarantee of no more than 3-year application pendency, and C) guarantee or adjustments for delays due to interference, secrecy orders and appeals. A section by section analysis of 35 U.S.C. 154(b)(2)(A) specifically provides that:

> Section 4402 imposes limitations on restoration of term. In general, pursuant to [35 U.S.C.] 154(b)(2)(A)-(C), total adjustments granted for restorations under [35 U.S.C. 154](b)(1) are reduced as follows: (1) To the extent that there are multiple grounds for extending the term of a patent that may exist simultaneously (e.g., delay due to a secrecy order under [35 U.S.C.] 181 and administrative delay under [35 U.S.C.] 154(b)(1)(A)), the term should not be extended for each ground of delay but only for the actual number of days that the issuance of a patent was delayed; See 145 Cong. Rec. S14,718[1]

As such, the period for over three-year pendency does not overlap only to the extent that the actual dates in the period beginning three years after the date on which the application was filed overlap with the actual dates in the periods for failure of the Office to take action within specified time frames. In other words, consideration of the overlap does not begin three years after the filing date of the application.

In this instance, the relevant period under 35 U.S.C. 154(b)(1)(B) in determining whether periods of delay "overlap" under 35 U.S.C. 154(b)(2)(A) is the entire period during which the application was pending before the Office, June 1, 2004, to the date the RCE was filed on December 17, 2008. Prior to the filing of the RCE, 740 days of patent term adjustment were accorded for the Office failing to respond within a specified time frame during the pendency of the application. All of the 565 days for Office delay in issuing the patent overlap with the 740 days of examination delay. During that time, the issuance of the patent was delayed by 740 days, not 740 + 565 days. The Office experienced 740 days of examination delay. Otherwise, the Office

[1] The AIPA is title IV of the Intellectual Property and Communications Omnibus Reform Act of 1999 (S. 1948), which was incorporated and enacted as law as part of Pub. L. 106-113. The Conference Report for H.R. 3194, 106th Cong. 1st Sess. (1999), which resulted in Pub. L. 106-113, does not contain any discussion (other than the incorporated language) of S. 1948. A section-by-section analysis of S. 1948, however, was printed in the Congressional Record at the request of Senator Lott, See 145 Cong. Rec. S14,708-26 (1999)(daily ed. Nov. 17, 1999).

took all actions set forth in 37 CFR 1.702(a) within the prescribed time frames. Nonetheless, given the 740 days of Office delay and the time allowed within the time frames for processing and examination, as of the filing of the RCE, the application was pending three years and 565 days. The Office did not delay 740 days and then an additional 565 days.

Accordingly, 740 days of patent term adjustment (not 740 and 565 days) was properly entered since the period of delay of 565 days attributable to the delay in the issuance of the patent overlaps with the adjustment of 740 days attributable to grounds specified in §§ 1.702(a)(1) and (a)(2). Entry of both periods is not warranted. Thus, 740 days is determined to be the actual number of days that the issuance of the patent was delayed.

Accordingly, at issuance, the Office properly entered no additional days of patent term adjustment.

In view thereof, the Office affirms that the revised determination of patent term adjustment at the time of the issuance of the patent is 672 days.

Telephone inquiries specific to this decision should be directed to Senior Petitions Attorney Patricia Faison-Ball at (571) 272-3212.

Christina Tartera Donnell

Christina Tartera Donnell
Senior Petitions Attorney
Office of Petitions

UNITED STATES PATENT AND TRADEMARK OFFICE

Commissioner for Patents
United States Patent and Trademark Office
P.O. Box 1450
Alexandria, VA 22313-1450
www.uspto.gov

Kelly Bauersfeld Lowry & Kelley, LLP
6320 Canoga Avenue
Suite 1650
Woodland Hills CA 91367

COPY MAILED

JAN 04 2005

OFFICE OF PETITIONS

In re Application of :
Juhan, Peterson and Wilson :
Application No. 10/858,835 :
Filed: June 1, 2004 : ON PETITION
For: Identification Device :
Having Reusable Transponder :

A petition under 37 CFR 1.47(a) was received in the United States Patent and Trademark Office (Office) on December 9, 2004.

On December 9, 2004, petitioner filed the present petition, a Declaration of Facts of Julie L. Gutierrez, a Declaration and Power of Attorney signed by two of the three joint inventors, and request for a two-month extension of time. Additionally, petitioner paid a $395.00 basic statutory filing fee, a $65.00 surcharge, and a $215.00 extension of time fee. However, petitioner failed to pay the requisite fee for the present petition under 37 CFR 1.47(a) in the amount of $200.00.

The rules and statutory provisions governing the operations of the Office require payment of a fee upon filing a petition under 37 CFR 1.47(a). In this instance, the fee required is $200.00. The petition in the above-identified application was not accompanied by payment of the required fee. **Therefore, no consideration on the merits can be given to the present petition until a renewed petition under 37 CFR 1.47(a) and the required fee is received by the Office within TWO MONTHS of the date of this decision. This period may be extended under 37 CFR 1.136(a).**

Accordingly, the petition is **dismissed.**

Petitioner is reminded that a grantable petition under 37 CFR 1.47(a) requires: (1) proof that the non-signing inventor cannot be reached or refuses to sign the oath or declaration

after having been presented with the application papers (specification, claims and drawings); (2) an acceptable oath or declaration in compliance with 35 U.S.C. §§ 115 and 116; (3) the petition fee; and, (4) a statement of the last known address of the non-signing inventor. Petitioner is permitted to supplement the renewed petition if petitioner believes that any of the above requirements have not been met.

Further correspondence with respect to this matter should be addressed as follows:

By mail: Mail Stop Petition
Commissioner for Patents
P.O. Box 1450
Alexandria, VA 22313-1450

By FAX: (703) 872-9306
Attn: Office of Petitions

By hand: U.S. Patent and Trademark Office
220 20th Street S.
Customer Window, Mail Stop Petition
Crystal Plaza Two, Lobby, Room 1B03
Arlington, VA 22202

Telephone inquiries should be directed to the undersigned at (571) 272-3211.

Christina Tartera Donnell

Christina Tartera Donnell
Petitions Attorney
Office of Petitions

UNITED STATES PATENT AND TRADEMARK OFFICE

Commissioner for Patents
United States Patent and Trademark Office
P.O. Box 1450
Alexandria, VA 22313-1450
www.uspto.gov

Kelly Bauersfeld Lowry Kelley, LLP
6320 Canoga Avenue
Suite 1650
Woodland Hills CA 91367

COPY MAILED

JAN 19 2005

OFFICE OF PETITIONS

In re Application of	:	DECISION ON PETITION
Juhan, Peterson and Wilson	:	
Application No. 10/858,835	:	
Filed: June 1, 2004	:	
Attorney Docket No. PREDYN-44327	:	

This is in response to the renewed petition under 37 CFR 1.47(a), filed January 4, 2005.

The petition is **dismissed**.

Applicants are given TWO (2) MONTHS from the mailing date of this decision to reply, correcting the below-noted deficiencies. Any reply should be entitled "Request for Reconsideration of Petition Under 37 CFR 1.47(a)," and should address the deficiencies noted below, except that the reply may include an oath or declaration executed by the non-signing inventor. Failure to respond will result in abandonment of the application. Any extensions of time will be governed by 37 CFR 1.136(a).

On June 1, 2004, applicants filed the above-identified application, without an executed declaration. On August 9, 2004, the Office of Initial Patent Examination mailed a Notice to File Missing Parts of Nonprovisional Application, requiring the submission of an executed oath or declaration, and payment of the statutory basic filing fee and a surcharge. On December 9, 2004, applicants filed a petition filed under 37 CFR 1.47(a), a Declaration of Facts of Julie L. Gutierrez, a Declaration and Power of Attorney signed by two of the three joint inventors, and a request for a two-month extension of time. Additionally, applicants paid a $395.00 basic statutory filing fee, a $65.00 surcharge, and a $215.00 extension of time fee. However, the Office did not consider the merits of the petition because applicants failed to pay the requisite petition fee.

On January 4, 2005, applicants filed the present renewed petition and paid the requisite $200.00 petition fee. Accordingly, the petition will be address on the merits.

In the Declaration of Facts, Ms. Gutierrez stated that on August 26, 2004, she forwarded a copy of the present patent application (specification, claims and drawings), a Declaration and Power of Attorney for patent application, and a patent Assignment document to Dodge Juhan, the non-signing inventor, at his last known address of 1711 Flanders Street, Granada Hills, California 91344. Ms. Gutierrez further stated that as of December 1, 2004, she had not received a response from Mr. Juhan **and was unable to locate him.**

A grantable petition under 37 CFR 1.47(a) requires: (1) proof that the non-signing inventor cannot be reached or refuses to sign the oath or declaration after having been presented with the application papers (specification, claims and drawings); (2) an acceptable oath or declaration in compliance with 35 U.S.C. §§ 115 and 116; (3) the petition fee; and (4) a statement of the last known address of the non-signing inventor. Applicants lacks item (1) as set forth above.

As to item (1), applicants have failed to submit sufficient evidence to prove that diligent efforts have been made to locate non-signing inventor Juhan. See MPEP 403.03(d).

If attempts to obtain a forwarding address and to locate the non-signing inventor by other means such as through E-mail, telephone, or the Internet fail, then applicants will have provided the necessary proof required under 37 CFR 1.47 that the inventor cannot be reached. Details of the efforts to locate the non-signing inventor should be set forth in an affidavit or declaration of facts by a person with firsthand knowledge of the details. Applicants should submit documentary evidence such as a copy of an envelope returned as undeliverable or the results of an E-mail or Internet search. Furthermore, the Office notes that a brief Internet search indicates that inventor Juhan may currently be residing in Thousand Oaks, California.

Further correspondence with respect to this matter should be addressed as follows and to the attention of Senior Petitions Attorney Christina Tartera Donnell:

By mail: Mail Stop Petition
Commissioner for Patents
P.O. Box 1450
Alexandria, VA 22313-1450

By FAX: (703) 872-9306
Attn: Office of Petitions

By hand: Customer Service Window
Randolph Building
401 Dulany Street
Alexandria, VA 22314

Telephone inquiries should be directed to the undersigned at (571) 272-3211.

Christina Tartera Donnell

Christina Tartera Donnell
Senior Petitions Attorney
Office of Petitions

UNITED STATES PATENT AND TRADEMARK OFFICE

Commissioner for Patents
United States Patent and Trademark Office
P.O. Box 1450
Alexandria, VA 22313-1450
www.uspto.gov

Kelly Bauersfeld Lowry & Kelley, LLP
6320 Canoga Avenue
Suite 1650
Woodland Hills CA 91367

COPY MAILED

MAY 17 2005

OFFICE OF PETITIONS

In re Application of	:	
Juhan, Peterson and Wilson	:	DECISION NOTING JOINDER OF
Application No. 10/858,835	:	INVENTOR AND PETITION
Filed: June 1, 2004	:	UNDER 37 CFR 1.47(a) MOOT
Attorney Docket No. PREDYN-44327	:	

This is in response to the renewed petition under 37 CFR 1.47(a), filed on May 2, 2005.

In view of the joinder of the inventors, further consideration under 37 CFR 1.47(a) is not necessary. Accordingly, the petition is dismissed as involving a moot issue. This application does not have any Rule 1.47(a) status and no such status should appear on the file wrapper. This application does not need to be returned to the Office of Petitions for further consideration under 37 CFR 1.47(a).

This matter is being referred to Technology Center Art Unit 28760.

Telephone inquiries should be directed to the undersigned at (571) 272-3211.

Christina Tartera Donnell

Christina Tartera Donnell
Senior Petitions Attorney
Office of Petitions

UNITED STATES PATENT AND TRADEMARK OFFICE

COMMISSIONER FOR PATENTS
UNITED STATES PATENT AND TRADEMARK OFFICE
WASHINGTON, DC 20231
www.uspto.gov

APPLICATION NO./ CONTROL NO.	FILING DATE	FIRST NAMED INVENTOR / PATENT IN REEXAMINATION	ATTORNEY DOCKET NO.
10/858837			

EXAMINER
Rita Mitra

ART UNIT	PAPER
165	20051017

DATE MAILED:

Please find below and/or attached an Office communication concerning this application or proceeding.

Commissioner of Patents

The decision on the petition for color drawings filed 01 Oct 2004 in the above entitled application is as follows:

☐ Delay in Prosecution Held Unavoidable (35 USC 133),

Petition Granted _____

☐ Delayed Payment of Issue Fee Accepted (35 USC 151),

Petition Granted _____

☒ Petition Granted _____

☐ Petition Denied _____

☐ Petition Dismissed _____

JON WEBER
SUPERVISORY PATENT EXAMINER

By Direction of the Deputy Assistant Director of Patents

_____

UNITED STATES PATENT AND TRADEMARK OFFICE

7-18-07

Commissioner for Patents
United States Patent and Trademark Office
P.O. Box 1450
Alexandria, VA 22313-1450
www.uspto.gov

Patent No. : 7,199,710
Ser. No. : 10/858,843
Inventor(s) : Takayuki Hiramitsu, et. al.
Issued : April 3, 2007
Title : CONTROLLER FOR REMOTE CONTROL SYSTEM
Docket No. : 2842.25US01

Re: Request for Certificate of Correction

Consideration has been given your request for the issuance of a certificate of correction for the above-identified patent under the provisions of Rule(s) 1.322 or 1.323.

Assignees' names and addresses (assignment data) printed in a patent, are based *solely* on information supplied in the appropriate space for identifying the assignment data, i.e., item 3 of the Issue Fee Transmittal Form PTOL-85B. Granting of a request under 37 CFR 3.81(b) is required to correct applicant's error providing ***incorrect or erroneous*** assignment data, *before* issuance of a Certificate of Correction, under 37 CFR 1.323 *(see Manual of Patent Examining Procedures (M.P.E.P) Chp.1400, sect. 1481).* This procedure is required *at any time after the issue fee is paid*, including after issuance of the patent.

In view of the foregoing, your request is hereby denied.

A request to correct the Assignee under 37 CFR 3.81(b) should include:

A. **the processing fee set forth in 37 CFR 1.117(h) (currently $130);**
B. a statement that the failure to include the correct assignee name on the PTOL-85B was inadvertent; and
C. a copy of the Notice of Recordation of Assignment Document, reflecting the reel and frame number where the assignment(s) is recorded and/or reflecting proof of *the date* the assignment was submitted for recordation.

In the Request, Applicant(s) may request that the file be forwarded to Certificates of Correction Branch, for issuance of a Certificate of Correction, if the Request is granted.

Any request under 37 CFR 3.81(b) should be directed to the following address or facsimile number:

By mail: Mail Stop PETITIONS
Commissioner for Patents
Post Office Box 1450
Alexandria, VA 22313-1450

By hand: Customer Service Window
Mail Stop Petitions
Randolph Building
40l Dulany Street
Alexandria, VA 22314

By fax: (703) 872-9306
ATTN: Office of Petitions

If a fee (currently $100) was previously submitted for consideration of a Request for Certificate of Correction, under CFR 1.323, to correct assignment data, , no additional fee is required.

Eva James
For Cecelia Newman
Decisions & Certificates
of Correction Branch
(703) **308-9390 ext. 124** or 105

Douglas J. Christensen
Patterson, Thuente, Skaar; & Christensen
4800 IDS Center
80 South 8th Street
Minneapolis, Minnesota 55402-2100

ej

UNITED STATES PATENT AND TRADEMARK OFFICE

Commissioner for Patents
United States Patent and Trademark Office
P.O. Box 1450
Alexandria, VA 22313-1450
www.uspto.gov

HANSRA PATENT SERVICES
4525 GLEN MEADOWS PLACE
BELLINGHAM WA 98226

COPY MAILED

NOV 3 0 2006

OFFICE OF PETITIONS

In re Application of
EVERETT, et al.
Application No. 10/858,845
Filed: June 2, 2004
Attorney Docket No. 3123-572

DECISION ON PETITION TO WITHDRAW FROM RECORD

This is a decision on the Request to Withdraw as attorney or agent of record under 37 C.F.R. § 1.36(b), filed September 18, 2006.

The request is **APPROVED**.

A grantable request to withdraw as attorney/agent of record must be signed by every attorney/agent seeking to withdraw or contain a clear indication that one attorney is signing on behalf of another/others. A request to withdraw will not be approved unless at least 30 (thirty) days would remain between the date of approval and the later of the expiration date of a time to file a response or the expiration date of the maximum time period which can be extended under 37 C.F.R. § 1.136(a).

The request was signed by Tejpal S. Hansra on behalf of all attorneys of record. All attorneys/agents associated have been withdrawn. Applicant is reminded that there is no attorney of record at this time.

The request to change the correspondence of record is not acceptable as the requested correspondence address is not that of: (1) the first named signing inventor; or (2) an intervening assignee of the entire interest under 37 C.F.R 3.71. All future communications from the Office will be directed to the first named signing inventor at the first copied address below until otherwise properly notified by the applicant.

Telephone inquiries concerning this decision should be directed to the undersigned at 571-272-7253.

Monica A. Graves
Petitions Examiner
Office of Petitions

cc: **TIM EVERETT**
6718 WALKER COURT
NIWOT, CO 80503

cc: **SEAGATE TECHNOLOGY LLC**
INTELLECTUAL PROPERTY – SHK2LG
1280 DISC DRIVE
SHAKOPEE, MN 55379

UNITED STATES PATENT AND TRADEMARK OFFICE

UNITED STATES DEPARTMENT OF COMMERCE
United States Patent and Trademark Office
Address: COMMISSIONER FOR PATENTS
P.O. Box 1450
Alexandria, Virginia 22313-1450
www.uspto.gov

APPLICATION NUMBER	FILING OR 371 (c) DATE	FIRST NAMED APPLICANT	ATTY. DOCKET NO./TITLE
10/858,845	06/02/2004	Tim Everett	3123-572

CONFIRMATION NO. 6497

OC000000021407998

32093
HANSRA PATENT SERVICES
4525 GLEN MEADOWS PLACE
BELLINGHAM, WA 98226

Date Mailed: 11/29/2006

NOTICE REGARDING CHANGE OF POWER OF ATTORNEY

This is in response to the Power of Attorney filed 09/18/2006.

- The withdrawal as attorney in this application has been accepted. Future correspondence will be mailed to the new address of record. 37 CFR 1.33.

MONICA A GRAVES
OP (571) 272-7253

FORMER ATTORNEY/AGENT COPY

UNITED STATES PATENT AND TRADEMARK OFFICE

Commissioner for Patents
United States Patent and Trademark Office
P.O. Box 1450
Alexandria, VA 22313-1450
www.uspto.gov

HANSRA PATENT SERVICES
4525 GLEN MEADOWS PLACE
BELLINGHAM, WA 98226

COPY MAILED

DEC 0 8 2006

OFFICE OF PETITIONS

In re Application of	:	
EVERETT, et al.	:	
Application No. 10/858,846	:	DECISION ON PETITION
Filed: June 02, 2004	:	TO WITHDRAW
Attorney Docket No. 3123-569	:	FROM RECORD
	:	

This is a decision on the Request to Withdraw as attorney or agent of record under 37 C.F.R. § 1.36(b), filed September 18, 2006.

The request is **APPROVED**.

A grantable request to withdraw as attorney/agent of record must be signed by every attorney/agent seeking to withdraw or contain a clear indication that one attorney is signing on behalf of another/others. A request to withdraw will not be approved unless at least 30 (thirty) days would remain between the date of approval and the later of the expiration date of a time to file a response or the expiration date of the maximum time period which can be extended under 37 C.F.R. § 1.136(a).

The request was signed by Tejpal S. Hansra on behalf of all attorneys of record who are associated with Customer No. 32093. All attorneys/agents associated with the Customer No. 32093 have been withdrawn.

Applicant is reminded that there is no attorney of record at this time.

The request to change the correspondence of record is not acceptable as the requested correspondence address is not that of: (1) the first named signing inventor; or (2) an intervening assignee of the entire interest under 37 C.F.R 3.71. All future communications from the Office will be directed to the first named signing inventor at the first copied address below until otherwise properly notified by the applicant.

There is no outstanding Office action that requires a reply from the applicant.

Telephone inquiries concerning this decision should be directed to the undersigned at 571-272-6825.

Patricia Volpe
Petitions Examiner
Office of Petitions

cc: TIM EVERETT
6718 WALKER COURT
NIWOT, CO 80503

cc: SEAGATE TECHNOLOGY LLC
INTELLECTUAL PROPERTY DEPT. - COL2LGL
389 DISC DRIVE
LONGMONT, CO 80503

UNITED STATES PATENT AND TRADEMARK OFFICE

UNITED STATES DEPARTMENT OF COMMERCE
United States Patent and Trademark Office
Address: COMMISSIONER FOR PATENTS
P.O. Box 1450
Alexandria, Virginia 22313-1450
www.uspto.gov

APPLICATION NUMBER	FILING OR 371 (c) DATE	FIRST NAMED APPLICANT	ATTY. DOCKET NO./TITLE
10/858,846	06/02/2004	Tim Everett	3123-569

CONFIRMATION NO. 6499

OC000000021531319

32093
HANSRA PATENT SERVICES
4525 GLEN MEADOWS PLACE
BELLINGHAM, WA 98226

Date Mailed: 12/08/2006

NOTICE REGARDING CHANGE OF POWER OF ATTORNEY

This is in response to the Power of Attorney filed 09/18/2006.

- The withdrawal as attorney in this application has been accepted. Future correspondence will be mailed to the new address of record. 37 CFR 1.33.

PATRICIA A VOLPE
OP (571) 272-6825

FORMER ATTORNEY/AGENT COPY

UNITED STATES PATENT AND TRADEMARK OFFICE

Commissioner for Patents
United States Patent and Trademark Office
P.O. Box 1450
Alexandria, VA 22313-1450
www.uspto.gov

LAHIVE & COCKFIELD, LLP
FLOOR 30, SUITE 3000
ONE POST OFFICE SQUARE
BOSTON MA 02109

COPY MAILED

SEP 2 2 2008

OFFICE OF PETITIONS

In re Application of	:	
Basi et al.	:	
Application No. 10/858,855	:	DECISION GRANTING
Filed: June 1, 2004	:	PETITION
Attorney Docket No. ELN-028RCE	:	

This is a decision on the petition, filed April 21, 2008, requesting that the reply filed in response to the final Office on above-identified application be accorded a filing date of February 25, 2008, rather than the presently accorded date of February 26, 2008. The petition is properly treated as a petition under 37 CFR 1.10(c).

Petitioner alleges that the application was deposited in Express Mail Service on February 25, 2008. In support, the petition is accompanied by a copy of Express Mail receipt No. EV957646048US (the same Express Mail number found on the original application papers located in the official file) showing a "date in" of February 25, 2008.

The Office considers the date the paper or fee is shown to have been deposited as "Express Mail" to be the "date-in" on the Express Mail label; MPEP 513. The evidence is convincing that the application was deposited as "Express Mail" with the U. S. Postal Service on February 25, 2008. Since February 25, 2008 was the next business day after the shortened statutory date of February 23, 2008, the Notice of Appeal and Amendment are entitled to a filing date of February 25, 2008.

In view of the above, the petition is **GRANTED**.

As a courtesy petitioner is reminded the last day for submission of the appeal brief and extension of time is September 25, 2008.

This application file is being referred to the Technology Center 1643 for appropriate action by the Examiner in the normal course of business on the reply received

Telephone inquiries relating to this decision should be directed to the undersigned at (571) 272-3215.

Charlema Grant

Charlema Grant
Petitions Attorney
Office of Petitions

UNITED STATES PATENT AND TRADEMARK OFFICE

Commissioner for Patents
United States Patent and Trademark Office
P.O. Box 1450
Alexandria, VA 22313-1450
www.uspto.gov

MAILED

MAR 30 2010

OFFICE OF PETITIONS

FISH & RICHARDSON P.C.
P.O. Box 1022
MINNEAPOLIS MN 55440-1022

In re Patent No. 7,603,357	: DECISION ON REQUEST
Gourdol, et al.	: FOR
Issue Date: October 13, 2009	: RECONSIDERATION OF
Application No. 10/858,857	: PATENT TERM ADJUSTMENT
Filed: June 1, 2004	: and
Atty. Docket No. 07844-653001/P606	: NOTICE OF INTENT TO ISSUE
	: CERTIFICATE OF CORRECTION

This is a decision on the petition filed on December 11, 2009, which is being treated as a petition under 37 CFR 1.705(d) requesting that the patent term adjustment indicated on the above-identified patent be corrected to indicate that the term of the above-identified patent is extended or adjusted by one thousand, five hundred and eleven (1,511) days.

The petition to correct the patent term adjustment indicated on the above-identified patent to indicate that the term of the above-identified patent is extended or adjusted by one thousand, five hundred and eleven (1,511) days is **GRANTED**.

The Office acknowledges receipt of $200.00 for the fee set forth in 37 CFR 1.18(e). No additional fees are required.

The application is being forwarded to the Certificates of Correction Branch for issuance of a certificate of correction. The Office will issue a certificate of correction indicating that the term of the above-identified patent is extended or adjusted by **one thousand, five hundred and eleven (1,511) days**.

Telephone inquiries specific to this matter should be directed to Kenya A. McLaughlin, Petitions Attorney, at (571) 272-3222.

/Christina Tartera Donnell/

Christina Tartera Donnell
Senior Petitions Attorney
Office of Petitions

Enclosure: Copy of DRAFT Certificate of Correction

DRAFT COPY

UNITED STATES PATENT AND TRADEMARK OFFICE

CERTIFICATE OF CORRECTION

PATENT : 7,603,357 B1

DATED : Oct. 13, 2009

INVENTOR(S) : Gourdol, et al.

It is certified that error appears in the above-identified patent and that said Letters Patent is hereby corrected as shown below:

On the cover page,

[*] Notice: Subject to any disclaimer, the term of this patent is extended or adjusted under 35 USC 154(b) by (1181) days

Delete the phrase "by 1181 days" and insert – by 1511 days--

UNITED STATES PATENT AND TRADEMARK OFFICE

Commissioner for Patents
United States Patent and Trademark Office
P.O. Box 1450
Alexandria, VA 22313-1450
www.uspto.gov

MCI, INC
TECHNOLOGY LAW DEPARTMENT
1133 19TH STREET NW, 10TH FLOOR
WASHINGTON DC 20036

COPY MAILED

NOV 17 2004

OFFICE OF PETITIONS

In re Application of
Nick Delregno et al.
Application No. 10/858,868
Filed: June 2, 2004
Attorney Docket No. RIC04013

: DECISION ACCORDING STATUS
: UNDER 37 CFR 1.47(a)

This is in response to the petition filed October 26, 2004 under 37 CFR 1.47(a).

The petition is **GRANTED**.

The above-identified application was filed on June 2, 2004, naming Nick Delregno, Scott R. Kotrla, David E. McDysan, Michael U. Bencheck, Matthew W. Turlington, Ross S. Hardin, Richard C. Schell, Howard Chiu, Lee D. Bengston and William Drake as joint inventors but without a signed declaration. Accordingly, on July 29, 2004, a "Notice To File Missing Parts of Application" was mailed, requiring *inter alia* a properly executed oath or declaration.

In response, on October 26, 2004, an oath or declaration executed by joint inventors Delregno, Kotrla, McDysan, Bencheck, Turlington, Hardin, Schell, Chiu and Bengston and, a petition under 37 CFR 1.47(a) and a request for a one month extension f time was filed. The petition argues that joint inventor Drake refuses to sign the oath or declaration and thus by his actions, to cooperate with the filing of the instant application.

A grantable petition under 37 CFR 1.47(a) requires: (1) proof that the non-signing inventor cannot be reached or refuses to sign the oath or declaration after having been presented with the application papers (specification, claims and drawings); (2) an acceptable oath or declaration in compliance with 35 U.S.C. §§ 115 and 116; (3) the petition fee; and (4) a statement of the last known address of the non-signing inventor.

The petition bears proof that the application papers were sent to Mr. Drake and that in spite of a telephone conversation between Mr. Drake and the attorney of record, as well as subsequent correspondences to Mr. Drake, he has failed to return an executed oath or declaration.

The above-identified application and papers have been reviewed and found in compliance with 37 CFR 1.47(a). In view thereof, this application is hereby accorded Rule 1.47(a) status.

The petition fee, surcharge for late filing of oath or declaration and extension of time fee have been charged to deposit account no. 13-2491 as per the authorization made in the petition.

Thus, as provided in Rule 1.47c, this Office will forward notice of this application's filing to the non-signing inventor at the address given in the petition. Notice of the filing of this application will also be published in the Official Gazette.

The application is being forwarded to the Office of Initial Patent Examination for further pre-examination processing.

Telephone inquiries concerning this matter may be directed to the undersigned Petitions Attorney at (571) 272-3212.

Patricia Faison-Ball

Patricia Faison-Ball
Senior Petitions Attorney
Office of Petitions

UNITED STATES PATENT AND TRADEMARK OFFICE

Commissioner for Patents
United States Patent and Trademark Office
P.O. Box 1450
Alexandria, VA 22313-1450
www.uspto.gov

WILLIAM DRAKE
2866 BELTLINE ROAD, APT #377
GARLAND, TX 75044

COPY MAILED

NOV 17 2004

OFFICE OF PETITIONS

In re Application of
Nick Delregno et al.
Application No. 10/858,868
Filed: June 2, 2004
For: SYSTEM AND METHOD FOR MONITORING, CONTROLLING AND PROVISIONING A TELECOMMUNICATIONS ACCESS NETWORK

Dear Mr. Drake:

You are named as a joint inventor in the above identified United States patent application, filed under the provisions of 35 U.S.C. 116 (United States Code), and 37 CFR 1.47(a), Rules of Practice in Patent Cases. Should a patent be granted on the application you will be designated therein as a joint inventor.

As a named inventor you are entitled to inspect any paper in the file wrapper of the application, order copies of all or any part thereof (at a prepaid cost per 37 CFR 1.19) or make your position of record in the application. Alternatively, you may arrange to do any of the preceding through a registered patent attorney or agent presenting written authorization from you. If you care to join the application, counsel of record (see below) would presumably assist you. Joining in the application would entail the filing of an appropriate oath or declaration by you pursuant to 37 CFR 1.63.

Telephone inquiries regarding this communication should be directed to the undersigned Petitions Attorney at (571) 272-3212. Requests for information regarding your application should be directed to the File Information Unit at 703/308-2733. Information regarding how to pay for and order a copy of the application, or a specific paper in the application, should be directed to Certification Division at 703/308-9726 or 1-800-972-6382 (outside the Washington D.C. area).

Patricia Faison-Ball

Patricia Faison-Ball
Senior Petitions Attorney
Office of Petitions

cc:
MCI, INC
TECHNOLOGY LAW DEPARTMENT
1133 19TH STREET NW, 10TH FLOOR
WASHINGTON DC 20036

UNITED STATES PATENT AND TRADEMARK OFFICE

Commissioner for Patents
United States Patent and Trademark Office
P.O. Box 1450
Alexandria, VA 22313-1450
www.uspto.gov

FISH & RICHARDSON P.C.
P.O. Box 1022
MINNEAPOLIS MN 55440-1022

COPY MAILED

SEP 2 2 2009

OFFICE OF PETITIONS

In re Patent No. 7,478,342 :
Issued: January 13, 2009 :
Application No. 10/858,874 : PATENT TERM ADJUSTMENT
Filed: June 1, 2004 :
Dkt. No.: 07844-654001/P607 :

This is a decision on the "APPLICATION FOR PATENT TERM ADJUSTMENT UNDER 37 C.F.R. § 1.705(d)," filed March 13, 2009.

The request for reconsideration of patent term adjustment (PTA) is **DISMISSED**.

The above-identified application matured into U.S. Pat. No. 7,478,342 on January 13, 2009. The patent issued with a PTA of 949 days. The request for reconsideration of patent term adjustment was timely filed within two months of the issue date of the patent. See, 37 CFR 1.705(d). Patentees request that the adjustment be increased from 949 days to 1,261 days.

Patentees request recalculation of the patent term adjustment based on the decision in Wyeth v. Dudas, 580 F. Supp. 2d 138, 88 U.S.P.Q. 2d 1538 (D.D.C. 2008). Patentees contend that pursuant to Wyeth, a PTO delay under 35 U.S.C. 154(b)(1)(A) overlaps with a delay under 35 U.S.C. 154(b)(1)(B) only if the delays occur on the same day. Patentees' set forth an "A" delay of 949 and a "B" delay of 592 days. The 592-day period is calculated based on the application having been filed under 35 U.S.C. 111(a) on June 1, 2004, and the patent having been issued on January 13, 2009. Patentees assert that the "A" delay and the "B" delay overlap by 280 days. Thus, patentees assert entitlement to an overall adjustment of 1,261 days (949 days + 592 days – 280 overlapping days – zero days of applicant delay).

Under 37 CFR 1.703(f), patentees are entitled to a period of patent term adjustment equal to the period of delays based on the grounds set forth in 37 CFR 1.702 reduced by the period of time equal to the period of time during which patentees failed to engage in reasonable efforts to conclude prosecution pursuant to 37 CFR 1.704. In other words, patentees are entitled to the period of Office delay reduced by the period of applicant delay.

Patentees do not dispute that the total period of Office delay is the sum of the period of three years delay and the period of examination delay, to the extent that these periods of delay are not overlapping. However, in effect, patentees contend that only a portion of the three year delay period overlaps with the period of examination delay.

The Office agrees that as of the time that at the time of issuance of the patent, the application was pending three years and 592 days after its filing date. The three years delay commences the day after the date that is three years after the date that an application is filed, and ends the date that the patent issues, notwithstanding any periods of time excluded pursuant to U.S.C. 154(b)(1)(B)(i)-(iii). The Office agrees that certain action was not taken within a specified time frame, and, thus, the entry of a period of adjustment of 949 days is correct. At issue is whether patentees should accrue an additional 592 days of patent term adjustment for the Office taking in excess of three years to issue the patent as well as 949 days for Office failure to take a certain action within a specified time frame (or examination delay).

The Office contends that the period of 592 days of delay in issuing the patent overlaps with the period of examination delay of 949 days. Patentees' calculation of the period of overlap is inconsistent with the Office's interpretation of this provision. 35 U.S.C. 154(b)(2)(A) limits the adjustment of patent term, as follows:

> To the extent that the periods of delay attributable to grounds specified in paragraph (1) overlap, the period of any adjustment granted under this subsection shall not exceed the actual number of days the issuance of the patent was delayed.

Likewise, 35 CFR 1.703(f) provides that:

> To the extent that periods of delay attributable to the grounds specified in § 1.702 overlap, the period of adjustment granted under this section shall not exceed the actual number of days the issuance of the patent was delayed.

As explained in Explanation of 37 CFR 1.703(f) and of the United States Patent and Trademark Office Interpretation of 35 U.S.C. 154(b)(2)(A), 69 Fed. Reg. 34283 (June 21, 2004), the Office interprets 35 U.S.C. 154(b)(2)(A) as permitting either patent term adjustment under 35 U.S.C. 154(b)(1)(A)(i)-(iv), or patent term adjustment under 35 U.S.C. 154(b)(1)(B), but not as permitting patent term adjustment under both 35 U.S.C. 154(b)(1)(A)(i)-(iv) and 154(b)(1)(B). Accordingly, the Office implements the overlap provision as follows:

> If an application is entitled to an adjustment under 35 U.S.C. 154(b)(1)(B), the entire period during which the application was pending (except for periods excluded under 35 U.S.C. 154(b)(1)(B)(i)-(iii)), and not just the period beginning three years after the actual filing date of the application, is the period of delay under 35 U.S.C. 154(b)(1)(B) in determining whether periods of delay overlap under 35 U.S.C. 154(b)(2)(A). Thus, any days of delay for Office issuance of the patent more than 3 years after the filing date of the application, which overlap with the days of patent term adjustment accorded prior to the issuance of the patent will not result in any additional patent term adjustment. See 35 U.S.C. 154(b)(1)(B), 35 U.S.C. 154(b)(2)(A), and 37 CFR § 1.703(f). *See Changes to Implement Patent Term Adjustment Under Twenty Year Term; Final Rule*, 65 Fed. Reg. 56366 (Sept. 18, 2000). See, also, Revision of Patent Term Extension and Patent Term Adjustment Provisions; Final Rule, 69 Fed. Reg. 21704 (April 22, 2004), 1282 Off. Gaz.

> Pat. Office 100 (May 18, 2004). See, also, Explanation of 37 CFR 1.703(f) and of the United States Patent and Trademark Office Interpretation of 35 U.S.C. 154(b)(2)(A), 69 Fed. Reg. 34283 (June 21, 2004).

The current wording of § 1.703(f) was revised in response to the misinterpretation of this provision by a number of Patentees. The rule was slightly revised to more closely track the corresponding language of 35 U.S.C. 154(b)(2)(A). The relevant portion differs only to the extent that the statute refers back to provisions of the statute whereas the rule refers back to sections of the rule. This was not a substantive change to the rule nor did it reflect a change of the Office's interpretation of 35 U.S.C. 154(b)(2)(A). As stated in the Explanation of 37 CFR 1.703(f) and of the United States Patent and Trademark Office Interpretation of 35 U.S.C. 154(b)(2)(A), the Office has consistently taken the position that if an application is entitled to an adjustment under the three-year pendency provision of 35 U.S.C. 154(b)(1)(B), the entire period during which the application was pending before the Office (except for periods excluded under 35 U.S.C. 154(b)(1)(B)(i)-(iii)), and not just the period beginning three years after the actual filing date of the application, is the relevant period under 35 U.S.C. 154(b)(1)(B) in determining whether periods of delay "overlap" under 35 U.S.C. 154(b)(2)(A).

This interpretation is consistent with the statute. Taken together the statute and rule provide that to the extent that periods of delay attributable to grounds specified in 35 U.S.C. 154(b)(1) and in corresponding § 1.702 overlap, the period of adjustment granted shall not exceed the actual number of days the issuance of the patent was delayed. The grounds specified in these sections cover the A) guarantee of prompt Patent and Trademark Office responses, B) guarantee of no more than 3-year application pendency, and C) guarantee or adjustments for delays due to interference, secrecy orders and appeals. A section by section analysis of 35 U.S.C. 154(b)(2)(A) specifically provides that:

> Section 4402 imposes limitations on restoration of term. In general, pursuant to [35 U.S.C.] 154(b)(2)(A)-(C), total adjustments granted for restorations under [35 U.S.C. 154](b)(1) are reduced as follows: (1) To the extent that there are multiple grounds for extending the term of a patent that may exist simultaneously (e.g., delay due to a secrecy order under [35 U.S.C.] 181 and administrative delay under [35 U.S.C.] 154(b)(1)(A)), the term should not be extended for each ground of delay but only for the actual number of days that the issuance of a patent was delayed; See, 145 Cong. Rec. S14,718[1].

As such, the period for over three-year pendency does not overlap only to the extent that the actual dates in the period beginning three years after the date on which the application was filed overlap with the actual dates in the periods for failure of the Office to take action within specified time frames.

---

[1] The AIPA is title IV of the Intellectual Property and Communications Omnibus Reform Act of 1999 (S. 1948), which was incorporated and enacted as law as part of Pub. L. 106-113. The Conference Report for H.R. 3194, 106th Cong. 1st Sess. (1999), which resulted in Pub. L. 106-113, does not contain any discussion (other than the incorporated language) of S. 1948. A section-by-section analysis of S. 1948, however, was printed in the Congressional Record at the request of Senator Lott, See 145 Cong. Rec. S14,708-26 (1999)(daily ed. Nov. 17, 1999).

In this instance, the relevant period under 35 U.S.C. 154(b)(1)(B) in determining whether periods of delay "overlap" under 35 U.S.C. 154(b)(2)(A) is the entire period during which the application was pending before the Office, June 1, 2004, to the date the patent issued on January 13, 2009. Prior to the issuance of the patent, 949 days of patent term adjustment were accorded for the Office failing to respond within a specified time frame during the pendency of the application. All of the 592 days for Office delay in issuing the patent overlap with the 949 days of Office delay. The Office did not delay 949 days and also delay an additional 592 days. Accordingly, as the 592 days attributable to the delay in the issuance of the patent overlaps with the adjustment of 949 days attributable to grounds specified in § 1.702(a), entry of both periods is not warranted.

In view thereof, no adjustment to the patent term will be made.

The Office acknowledges submission of the required application fee of $200.00.

Telephone inquiries specific to this matter should be directed to the undersigned at (571) 272-3205.

Alesia M. Brown
Petitions Attorney
Office of Petitions

UNITED STATES PATENT AND TRADEMARK OFFICE

Commissioner for Patents
United States Patent and Trademark Office
P.O. Box 1450
Alexandria, VA 22313-1450
www.uspto.gov

STOEL RIVES LLP - SLC
201 SOUTH MAIN STREET
ONE UTAH CENTER
SALT LAKE CITY, UT 84111

COPY MAILED

AUG 05 2008

In re Application of	:	
John KELLY et al	:	
Application No. 10/858,877	:	DECISION ON PETITION
Filed: 6/1/2004	:	
Attorney Docket No. ONSOO7.00	:	

This is a decision on the petition under the unintentional provisions of 37 CFR 1.137(b), filed 3/20/2008, to revive the above-identified application.

The petition is **DISMISSED**.

Any request for reconsideration of this decision must be submitted within TWO (2) MONTHS from the mail date of this decision. Extensions of time under 37 CFR 1.136(a) are permitted. The reconsideration request should include a cover letter entitled "Renewed Petition under 37 CFR 1.137(b)." This is **not** a final agency action within the meaning of 5 U.S.C. § 704.

The application became abandoned for failure to reply in a timely manner to the notice of non-compliant amendment mailed, 11/30/2005, which set a shortened statutory period for reply of one (1) month. No extensions of time under the provisions of 37 CFR 1.136(a) was obtained. Accordingly, the application became abandoned on 12/31/2005.

A grantable petition under 37 CFR 1.137(b) must be accompanied by: (1) the required reply, unless previously filed; (2) the petition fee as set forth in 37 CFR 1.17(m); (3) a statement that the entire delay in filing the required reply from the due date for the reply until the filing of a grantable petition pursuant to 37 CFR 1.137(b) was unintentional; and (4) any terminal disclaimer (and fee as set forth in 37 CFR 1.20(d)) required by 37 CFR 1.137(d). Where there is a question as to whether either the abandonment or the delay in filing a petition under 37 CFR 1.137 was unintentional, the Director may require additional information. *See* MPEP 711.03(c)(II)(C) and (D). The instant petition lacks item (3).

As to item (3) above, the statement of delay is not acceptable.

First, petitioner's attention is directed to 37 CFR 1.33(b), which states:

> *(b) Amendments and other papers. Amendments and other papers, except for written assertions pursuant to § 1.27(c)(2)(ii) of this part, filed in the application must be signed by:*
>
> *(1) A registered patent attorney or patent agent of record appointed in compliance with § 1.32(b);*
>
> *(2) A registered patent attorney or patent agent not of record who acts in a representative capacity under the provisions of § 1.34;*
>
> *(3) An assignee as provided for under §3.71(b) of this chapter; or*
>
> *(4) All of the applicants (§ 1.41(b)) for patent, unless there is an assignee of the entire interest and such assignee has taken action in the application in accordance with § 3.71 of this chapter.*

An **unsigned** amendment (or other paper) or one not properly signed by a person having authority to prosecute the application is not entered. Therefore, as the petition is not signed, the petition is considered to not contain a proper statement of unintentional delay.

Next, there are three periods to be considered during the evaluation of a petition under 37 CFR 1.137(b):

(1) the delay in reply that originally resulted in the abandonment;

(2) the delay in filing an initial petition pursuant to 37 CFR 1.137(b) to revive the application; and

(3) the delay in filing a grantable petition pursuant to 37 CFR 1.137(b) to revive the application.

Currently, the delay has not been shown to the satisfaction of the Director to be unintentional for periods (1) and (2).

<u>As to Period (1):</u>

The patent statute at 35 U.S.C. § 41(a)(7) authorizes the Director to revive an "unintentionally abandoned application." The legislative history of Public Law 97-247 reveals that the purpose of 35 U.S.C. § 41(a)(7) is to permit the Office to have more discretion than in 35 U.S.C. §§ 133 or 151 to revive abandoned applications in appropriate circumstances, but places a limit on this discretion, stating that "[u]nder this section a petition accompanied by either a fee of $500 or a fee of $50 **would not be granted where the abandonment** or the failure to pay the fee for issuing the patent **was intentional** as opposed to being unintentional or unavoidable." [emphasis

added]. See H.R. Rep. No. 542, 97th Cong., 2d Sess. 6-7 (1982), *reprinted in* 1982 U.S.C.C.A.N. 770-71. The revival of an intentionally abandoned application is antithetical to the meaning and intent of the statute and regulation.

35 U.S.C. § 41(a)(7) authorizes the Director to accept a petition "for the revival of an unintentionally abandoned application for a patent." As amended December 1, 1997, 37 CFR 1. 137(b)(3) provides that a petition under 37 CFR 1.137(b) must be accompanied by a statement that the delay was unintentional, but provides that "[t]he Commissioner may require additional information where there is a question whether the delay was unintentional." Where, as here, there is a question whether the initial delay was unintentional, the petitioner must meet the burden of establishing that the delay was unintentional within the meaning of 35 U.S.C. § 41(a)(7) and 37 CFR 1.137(b). *See* **In** re Application of G, **11** USPQ2d 1378, 1380 (Comm'r Pats. 1989); 37 CFR 1.137(b). Here, in view of the inordinate delay (more than 2 years) in resuming prosecution, there is a question whether the entire delay was unintentional. Petitioner should note that the issue is not whether some of the delay was unintentional by any party; rather, the issue is whether the entire delay has been shown to the satisfaction of the Director to be unintentional.

The question under 37 CFR 1.137 (b) for period (1) is whether the delay on the part of the party having the right or authority to reply to avoid abandonment (or not reply) was unintentional. Accordingly, any renewed petition must clearly identify the party having the right to reply to avoid abandonment on 12/31/2005. That party, in turn must explain what effort(s) was made to further reply to the outstanding Office action and, further, why no reply was filed. If no effort was made to further reply, then that party must explain why the delay in this application does not result from a deliberate course of action (or inaction). Likewise, as Sean M. Fitzgerald ("Fitzgerald") was counsel at the time of abandonment. Fitzgerald should explain why this application became abandoned while it was under his control and what efforts were made to further the reply itself and with whom this matter was discussed outside of Fitzgerald. Copies of any correspondence relating to the filing, or to not filing a further reply to the outstanding Office action are required from responsible person(s), Fitzgerald and whoever else was involved with this application at the time of abandonment. Statements are required from any and all persons then at Fitzgerald, and the responsible person(s) having firsthand knowledge of the circumstances surrounding the lack of a reply to the outstanding Office action. As the courts have made clear, it is pointless for the USPTO to revive a long abandoned application without an adequate showing that the delay did not result from a deliberate course of action. *See* Lawman Armor v. Simon, 2005 U.S. Dist. LEXIS 10843, 74 USPQ2d 1633 (DC EMich 2005); Field Hybrids, LLC v. Toyota Motor Corp., 2005 U.S. Dist. LEXIS 1159 (D. Minn Jan. 27,2005); Lumenvte Int'l Corp. v. Cable Lite Corp., Nos. 96-1011, 96-1077, 1996 U.S. App. LEXIS 16400, 1996 WL 383927 (Fed. Cir. July 9, 1996) (unpublished) (patents held unenforceable due to a finding of inequitable conduct in submitting an inappropriate statement that the abandonment was unintentional).

As to Period (2):

Likewise, where the applicant deliberately chooses not to seek or persist in seeking the revival of an abandoned application, or where the applicant deliberately chooses to delay seeking the

revival of an abandoned application, the resulting delay in seeking revival of the abandoned application cannot be considered as "unintentional" within the meaning of 37 CFR 1.137(b). *See* MPEP 711.03(c).

The language of both 35 U.S.C. § 41(a)(7) and 37 CFR 1.137(b) are clear and unambiguous, and, furthermore, without qualification. That is, the delay in filing the reply during prosecution, as well as in filing the petition seeking revival, must have been, without qualification, "unintentional" for the reply to now be accepted on petition. The Office requires that the entire delay be at least unintentional as a prerequisite to revival of an abandoned application to prevent abuse and injury to the public. *See* H.R. Rep. No. 542, 97th Cong., 2d Sess. 7 (1982), reprinted in 1982 U.S.C.C.A.N. 771 ("[i]n order to prevent abuse and injury to the public the Commissioner . . . could require applicants to act promptly after becoming aware of the abandonment"). The December 1997 change to 37 CFR 1.137 did not create any new right to overcome an intentional delay in seeking revival, or in renewing an attempt at seeking revival, of an abandoned application. *See* Changes to Patent Practice and Procedure; Final Rule Notice, 62 Fed. Reg. 53131, 53160 (October 10, 1997), 1203 Off. Gaz. Pat. Office 63, 87 (October 21, 1997), which clearly stated that any protracted delay (here, over 2 years) could trigger, as here, a request for additional information. As the courts have since made clear, a protracted delay in seeking revival, as here, requires a petitioner's detailed explanation seeking to excuse the delay as opposed to USPTO acceptance of a general allegation of unintentional delay. *See* Lawman Armor v. Simon, 2005 U.S. Dist. LEXIS 10843, 74 USPQ2d 1633, at 1637-8 (DC EMich 2005); Field Hybrids, LLC v. Toyota Motor Corp., 2005 U.S. Dist. LEXIS 1159 (D. Minn Jan. 27, 2005) at *21-*23. Statements are required from any and all persons then at Fitzgerald and the responsible person(s) having firsthand knowledge of the circumstances surrounding the protracted delay, after the abandonment date, in seeking revival.

As noted in MPEP 711.03(c)(II), subsection D, in instances in which such petition was not filed within 1 year of the date of abandonment of the application, applicants should include:

> (A) the date that the applicant first became aware of the abandonment of the application; and
> (B) a showing as to how the delay in discovering the abandoned status of the application occurred despite the exercise of due care or diligence on the part of the applicant.

In either instance, applicant's failure to carry the burden of proof to establish that the "entire" delay was "unavoidable" or "unintentional" may lead to the denial of a petition under 37 CFR 1.137(b), regardless of the circumstances that originally resulted in the abandonment of the application. *See also* New York University v. Autodesk, 2007 U.S. DIST LEXIS, U.S.District LEXIS 50832, *10 -*12 (S.D.N.Y. 2007)(protracted delay in seeking revival undercuts assertion of unintentional delay).

Any renewed petition may be addressed as follows:

By Mail: Mail Stop PETITION
Commissioner for Patents
P. O. Box 1450
Alexandria, VA 22313-1450

By hand: U. S. Patent and Trademark Office
Customer Service Window, Mail Stop Petitions
Randolph Building
401 Dulany Street
Alexandria, VA 22314

The centralized facsimile number is **(571) 273-8300.**

Correspondence regarding this decision may also be filed through the electronic filing system of the USPTO.

To expedite consideration, petitioner may wish to contact the undersigned regarding the filing of the renewed petition under 37 CFR 1.137(b).

Telephone inquiries concerning this decision should be directed to Quyen Leung at (571) 272-6051 or in her absence, the undersigned at (571) 272-7099.

for

David A. Bucci
Petitions Examiner
Office of Petitions

UNITED STATES PATENT AND TRADEMARK OFFICE

UNITED STATES DEPARTMENT OF COMMERCE
United States Patent and Trademark Office
Address: COMMISSIONER FOR PATENTS
P.O. Box 1450
Alexandria, Virginia 22313-1450
www.uspto.gov

APPLICATION NUMBER	FILING OR 371(C) DATE	FIRST NAMED APPLICANT	ATTY. DOCKET NO./TITLE
10/858,877	06/01/2004	John Kelly	ONSOO7.00

CONFIRMATION NO. 6288

POA ACCEPTANCE LETTER

32642
STOEL RIVES LLP - SLC
201 SOUTH MAIN STREET
ONE UTAH CENTER
SALT LAKE CITY, UT 84111

OC000000031371613

Date Mailed: 08/04/2008

NOTICE OF ACCEPTANCE OF POWER OF ATTORNEY

This is in response to the Power of Attorney filed 02/25/2008.

The Power of Attorney in this application is accepted. Correspondence in this application will be mailed to the above address as provided by 37 CFR 1.33.

/kocreasy/

Office of Data Management, Application Assistance Unit (571) 272-4000, or (571) 272-4200, or 1-888-786-0101

UNITED STATES PATENT AND TRADEMARK OFFICE

Commissioner for Patents
United States Patent and Trademark Office
P.O. Box 1450
Alexandria, VA 22313-1450
www.uspto.gov

STOEL RIVES LLP - SLC
201 SOUTH MAIN STREET
ONE UTAH CENTER
SALT LAKE CITY, UT 84111

COPY MAILED
AUG 05 2008

In re Application of :
John KELLY et al :
Application No. 10/858,879 : ON PETITION
Filed: 6/1/2004 :
Attorney Docket No. ONS002.00 :

This is a decision on the petition under the unintentional provisions of 37 CFR 1.137(b), filed 3/20/2008, to revive the above-identified application.

The petition is **DISMISSED**.

Any request for reconsideration of this decision must be submitted within TWO (2) MONTHS from the mail date of this decision. Extensions of time under 37 CFR 1.136(a) are permitted. The reconsideration request should include a cover letter entitled "Renewed Petition under 37 CFR 1.137(b)." This is **not** a final agency action within the meaning of 5 U.S.C. § 704.

The application became abandoned for failure to reply in a timely manner to the non-final Office action mailed, 5/2/2006, which set a shortened statutory period for reply of three (3) months. No extensions of time under the provisions of 37 CFR 1.136(a) was obtained. Accordingly, the application became abandoned on 8/3/2006.

A grantable petition under 37 CFR 1.137(b) must be accompanied by: (1) the required reply, unless previously filed; (2) the petition fee as set forth in 37 CFR 1.17(m); (3) a statement that the entire delay in filing the required reply from the due date for the reply until the filing of a grantable petition pursuant to 37 CFR 1.137(b) was unintentional; and (4) any terminal disclaimer (and fee as set forth in 37 CFR 1.20(d)) required by 37 CFR 1.137(d). Where there is a question as to whether either the abandonment or the delay in filing a petition under 37 CFR 1.137 was unintentional, the Director may require additional information. See MPEP 711.03(c)(II)(C) and (D). The instant petition lacks item(s) (1), (3).

As to items (1) and (3), the required reply and the statement of delay are not acceptable. In this regard, petitioner's attention is directed to 37 CFR 1.33(b), which states:

> *(b) Amendments and other papers. Amendments and other papers, except for written assertions pursuant to § 1.27(c)(2)(ii) of this part, filed in the application must be signed by:*

(1) A registered patent attorney or patent agent of record appointed in compliance with § 1.32(b);

(2) A registered patent attorney or patent agent not of record who acts in a representative capacity under the provisions of § 1.34;

(3) An assignee as provided for under §3.71(b) of this chapter; or

(4) All of the applicants (§ 1.41(b)) for patent, unless there is an assignee of the entire interest and such assignee has taken action in the application in accordance with § 3.71 of this chapter.

An **unsigned** amendment (or other paper) or one not properly signed by a person having authority to prosecute the application is not entered. Thus, the petition is considered to not contain a proper statement of unintentional delay and the concurrently filed amendment to not be the required reply.

The record indicates that Sean M. Fitzgerald ("Fitzgerald") was responsible for prosecution of the application when the reply necessary to avoid abandonment was due. Therefore, petitioner must provide a statement from Fitzgerald explaining why action was not timely taken to prevent the application from becoming abandoned.

Petitioner is advised to send a letter (accompanied by a copy of this decision) to Fitzgerald at 3182 Campus Drive #342, San Mateo CA 94402-3123, by certified or registered mail (return receipt requested) indicating that the U.S. Patent and Trademark Office (USPTO) is requesting assistance in ascertaining the cause of abandonment of the above-identified application, and that the USPTO is requesting that Fitzgerald provide within a specified period (e.g., one month) a statement setting forth why appropriate action was not timely taken to prevent the application from becoming abandoned. Petitioner is advised that, in the event that Fitzgerald does not provide such a statement, petitioner should submit a copy of such letter and a copy of the return receipt.

Further correspondence with respect to this matter should be addressed as follows:

By Mail: Mail Stop PETITION
Commissioner for Patents
P. O. Box 1450
Alexandria, VA 22313-1450

By hand: U. S. Patent and Trademark Office
Customer Service Window, Mail Stop Petitions
Randolph Building
401 Dulany Street
Alexandria, VA 22314

The centralized facsimile number is **(571) 273-8300.**

Telephone inquiries concerning this decision should be directed to Quyen Leung at (571) 272-6051 or in her absence, the undersigned at (571) 272-7099.

Anthony Knight for

David A. Bucci
Petitions Examiner
Office of Petitions

UNITED STATES PATENT AND TRADEMARK OFFICE

UNITED STATES DEPARTMENT OF COMMERCE
United States Patent and Trademark Office
Address: COMMISSIONER FOR PATENTS
P.O. Box 1450
Alexandria, Virginia 22313-1450
www.uspto.gov

APPLICATION NUMBER	FILING OR 371(C) DATE	FIRST NAMED APPLICANT	ATTY. DOCKET NO./TITLE
10/858,879	06/01/2004	John Kelly	ONS002.00

CONFIRMATION NO. 6289

POA ACCEPTANCE LETTER

32642
STOEL RIVES LLP - SLC
201 SOUTH MAIN STREET
ONE UTAH CENTER
SALT LAKE CITY, UT 84111

OC000000031371319

Date Mailed: 08/04/2008

NOTICE OF ACCEPTANCE OF POWER OF ATTORNEY

This is in response to the Power of Attorney filed 02/25/2008.

The Power of Attorney in this application is accepted. Correspondence in this application will be mailed to the above address as provided by 37 CFR 1.33.

/kocreasy/

Office of Data Management, Application Assistance Unit (571) 272-4000, or (571) 272-4200, or 1-888-786-0101

UNITED STATES PATENT AND TRADEMARK OFFICE

Commissioner for Patents
United States Patent and Trademark Office
P.O. Box 1450
Alexandria, VA 22313-1450
www.uspto.gov

Arnold & Porter LLP (24126)
Attn: IP Docketing Dept.
555 Twelfth Street, N.W.
Washington, DC 20004-1206

MAILED

MAR 01 2010

OFFICE OF PETITIONS

In re Patent of Afar et al.	:	DECISION ON REQUEST
Patent No. 7,575,749	:	FOR RECONSIDERATION OF
Issue Date: August 18, 2009	:	PATENT TERM ADJUSTMENT
Application No. 10/858,887	:	AND NOTICE OF INTENT TO
Filing Date: June 1, 2004	:	ISSUE CERTIFICATE OF
Attorney Docket No. GNE-0160-C2	:	CORRECTION

This is a decision on the petition filed on September 30, 2009, which is being treated as a petition under 37 C.F.R. § 1.705(d) requesting that the patent term adjustment indicated on the patent be corrected to indicate that the term of the above-identified patent is extended or adjusted by four hundred ninety-five (495) days.

The petition to correct the patent term adjustment indicated on the above-identified patent to indicate that the term of the above-identified patent is extended or adjusted by four hundred ninety-five (495) days is **GRANTED to the extent indicated herein**.

As the period from the filing date of the request for continued examination (RCE) to the issue date of the patent is not included in the period of delay under 35 U.S.C. § 154(b)(1)(B), the over three year period began on June 2, 2007, and ended on March 6, 2008, *the day before* the RCE was filed, and is 279 (not 280) days. See 35 U.S.C. § 154(b)(1)(B)(i). As such, the patent term adjustment is 494 days, not 495 days.

The Office will *sua sponte* issue a certificate of correction. Pursuant to 37 C.F.R. § 1.322, the Office will not issue a certificate of correction without first providing assignee or patentee an opportunity to be heard. Accordingly, patentees are given **one (1) month or thirty (30) days**, whichever is longer, from the mail date of this decision to respond. No extensions of time will be granted under 37 C.F.R. § 1.136.

The petition provides the Office with authorization to charge any necessary fees to Deposit Account No. 50-4634, but states patentees "do not believe the $200 charge for reconsideration of the PTA should be charged [because] no error was made on the part of the Applicants." An application for patent term adjustment under 37 C.F.R. § 1.705 must be accompanied by payment of a $200 fee pursuant to 37 C.F.R. § 1.18(e) and the Office does not refund the fee

even if the petition is necessitated by Office error.[1] Therefore, the Office has charged $200 to the deposit account.

The application is being forwarded to the Certificates of Branch for issuance of a certificate of correction. The Office will issue a certificate of correction indicating that the term of the above-identified patent is extended or adjusted by **four hundred ninety-four (494)** days.

Telephone inquiries specific to this decision should be directed to Senior Petitions Attorney Steven Brantley at (571) 272-3203.

Nancy Johnson
Senior Petitions Attorney
Office of Petitions

Enclosure: Copy of DRAFT Certificate of Correction

[1] *See* Response to Comment 1, Changes to Implement Patent Term Adjustment Under Twenty-Year Patent Term; Final Rule, 65 Fed. Reg. 56,366, 53,374 (September 18, 2000), 1239 Off. Gaz. Pat. Office 14 (October 3, 2000) ("refunding the fee under § 1.18(e) when the application for patent term adjustment is correct would: (1) require the Office to raise the fee set forth in § 1.18(e) (to enable the Office to recover the same aggregate amount); and (2) add further complication to a review process that must take place in a limited period of time.")

UNITED STATES PATENT AND TRADEMARK OFFICE

CERTIFICATE OF CORRECTION

PATENT NO.	:	7,575,749 B2
ISSUE DATE	:	August 18, 2009
INVENTOR(S)	:	Afar et al.

DRAFT

It is certified that error appears in the above-identified patent and that said Letters Patent is hereby corrected as shown below:

On the cover page,

[*] Notice: Subject to any disclaimer, the term of this patent is extended or adjusted under 35 USC 154(b) by 215 days.

Delete the phrase "by 215 days" and insert - by 494 days--

UNITED STATES PATENT AND TRADEMARK OFFICE

UNITED STATES DEPARTMENT OF COMMERCE
United States Patent and Trademark Office
Address: COMMISSIONER FOR PATENTS
P.O. Box 1450
Alexandria, Virginia 22313-1450
www.uspto.gov

Arnold & Porter LLP (24126)
Attn: IP Docketing Dept.
555 Twelfth Street, N.W.
Washington, DC 20004-1206

Mail Date: 04/21/2010

Applicant	: Daniel E. Afar	: DECISION ON REQUEST FOR
Patent Number	: 7575749	: RECALCULATION of PATENT
Issue Date	: 08/18/2009	: TERM ADJUSTMENT IN VIEW
Appliction No	: 10/858,887	: OF WYETH AND NOTICE OF INTENT TO
Filed	: 06/01/2004	: ISSUE CERTIFICATE OF CORRECTION
		:

The Request for Recalculation is **GRANTED** to the extent indicated.

The patent term adjustment has been determined to be **773** days. The USPTO will *sua sponte* issue a certificate of correction reflecting the amount of PTA days determined by the recalculation.

Prior to the issuance of the certificate of correction, the USPTO will afford patentee an opportunity to be heard and request reconsideration. Accordingly, patentee has **one month or thirty (30) days**, whichever is longer, to file a request for reconsideration of this patent term adjustment calculation. See 35 U.S.C. 154(b)(3)(B)(ii) and 37 CFR 1.322(a)(4). No extensions of time will be granted under 37 CFR 1.136.

Patentee should use document code PET.OP if electronically filing a request for reconsideration of this patent term adjustment calculation. The patentee must also include the information required by 37 CFR 1.705(b)(2) and the fee required by 37 CFR 1.18(e). If patentee does not file a timely request for reconsideration of this patent term adjustment calculation including the information required by 37 CFR 1.705(b)(2) and the fee required by 37 CFR 1.18(e), the USPTO will issue a certificate of correction reflecting the PTA determination noted above.

Patentee should be aware that in order to preserve the right to review in the United States District Court for the District of Columbia of the USPTO patent term adjustment determination, patentee must ensure that he or she also take the steps required under 35 U.S.C. 154(b)(4)(A) in a timely manner. Nothing in the request for recalculation should be construed as providing an alternative time frame for commencing a civil action under 35 U.S.C. 154(b)(4)(A).

Any questions concerning this decision should be directed to the Office of Patent Legal Administration at 571-272-7702.

UNITED STATES PATENT AND TRADEMARK OFFICE

UNITED STATES DEPARTMENT OF COMMERCE
United States Patent and Trademark Office
Address: COMMISSIONER FOR PATENTS
P.O. Box 1450
Alexandria, Virginia 22313-1450
www.uspto.gov

FISH & RICHARDSON P.C.
P.O. Box 1022
MINNEAPOLIS, MN 55440-1022

Mail Date: 04/20/2010

Applicant	: Anubha Rastogi	: DECISION ON REQUEST FOR
Patent Number	: 7653255	: RECALCULATION of PATENT
Issue Date	: 01/26/2010	: TERM ADJUSTMENT IN VIEW
Appliction No	: 10/858,901	: OF WYETH AND NOTICE OF INTENT TO
Filed	: 06/02/2004	: ISSUE CERTIFICATE OF CORRECTION
		:

The Request for Recalculation is **GRANTED** to the extent indicated.

The patent term adjustment has been determined to be **1129** days. The USPTO will *sua sponte* issue a certificate of correction reflecting the amount of PTA days determined by the recalculation.

Prior to the issuance of the certificate of correction, the USPTO will afford patentee an opportunity to be heard and request reconsideration. Accordingly, patentee has **one month or thirty (30) days**, whichever is longer, to file a request for reconsideration of this patent term adjustment calculation. See 35 U.S.C. 154(b)(3)(B)(ii) and 37 CFR 1.322(a)(4). No extensions of time will be granted under 37 CFR 1.136.

Patentee should use document code PET.OP if electronically filing a request for reconsideration of this patent term adjustment calculation. The patentee must also include the information required by 37 CFR 1.705(b)(2) and the fee required by 37 CFR 1.18(e). If patentee does not file a timely request for reconsideration of this patent term adjustment calculation including the information required by 37 CFR 1.705(b)(2) and the fee required by 37 CFR 1.18(e), the USPTO will issue a certificate of correction reflecting the PTA determination noted above.

Patentee should be aware that in order to preserve the right to review in the United States District Court for the District of Columbia of the USPTO patent term adjustment determination, patentee must ensure that he or she also take the steps required under 35 U.S.C. 154(b)(4)(A) in a timely manner. Nothing in the request for recalculation should be construed as providing an alternative time frame for commencing a civil action under 35 U.S.C. 154(b)(4)(A).

Any questions concerning this decision should be directed to the Office of Patent Legal Administration at 571-272-7702.

UNITED STATES PATENT AND TRADEMARK OFFICE

Commissioner for Patents
United States Patent and Trademark Office
P.O. Box 1450
Alexandria, VA 22313-1450
www.uspto.gov

COPY MAILED

APR 30 2009

OFFICE OF PETITIONS

Cozen O'Connor, P.C.
1900 Market Street
Philadelphia, PA 19103-3508

In re Application of	:	
Max N. Moore et al.	:	
Application No. 10/858,917	:	DECISION ON PETITION
Filed: June 2, 2004	:	TO WITHDRAW
Attorney Docket No. DVCM0003US	:	FROM RECORD
	:	

This is a decision on the Request to Withdraw as attorney or agent of record under 37 C.F.R. § 1.36(b), filed July 12, 2006.

The request is **moot because a revocation of power of attorney has been accepted**.

A review of the file record indicates that the power of attorney to Paul K. Legaard and all attorneys/agents of record have been revoked by the assignee of the patent application on July 12, 2006. Accordingly, the request to withdraw under 37 C.F.R. § 1.36(b) is moot.

All future communications from the Office will be directed to the below-listed address until otherwise notified by applicant.

Telephone inquires concerning this decision should be directed to Kimberly Inabinet at 571-272- 4618.

Kimberly Inabinet
Petitions Examiner
Office of Petitions

cc: Isis Pharmaceuticals, Inc.
1896 Rutherford Road
Carlsbad, CA 92008

UNITED STATES PATENT AND TRADEMARK OFFICE

Commissioner for Patents
United States Patent and Trademark Office
P.O. Box 1450
Alexandria, VA 22313-1450
www.uspto.gov

DAYCO PRODUCTS, LLC
1 PRESTIGE PLACE
MIAMISBURG OH 45342

COPY MAILED

JUL 19 2007

OFFICE OF PETITIONS

In re Application of :
Douglas D. McCracken et al :
Application No. 10/858,948 : DECISION GRANTING PETITION
Filed: May 28, 2004 : UNDER 37 CFR 1.137(b)
Attorney Docket No. 04-16 :

This is a decision on the petition under 37 CFR 1.137(b), filed February 27, 2007, to revive the above-identified application.

The petition is **GRANTED**.

The petition satisfies the conditions for revival pursuant to the provisions of 37 CFR 1.137(b) in that (1) the reply in the form of the issue and publication fee; (2) the petition fee; and (3) the required statement of unintentional delay have been received. Accordingly, the reply to the Notice of Allowance of October 17, 2006, is accepted as having been unintentionally delayed.

Telephone inquiries concerning this decision should be directed to the undersigned at (571) 272-3208.

This matter is being referred to Patent Publication.

Karen Creasy
Petitions Examiner
Office of Petitions

UNITED STATES PATENT AND TRADEMARK OFFICE

Commissioner for Patents
United States Patent and Trademark Office
P.O. Box 1450
Alexandria, VA 22313-1450
www.uspto.gov

Paper No. 111604

SYLMARK, INC.
4929 Wilshire Blvd
Suite 500
Los Angeles, CA 90010

DEC - 1 2004

In re Application of:
Peter Spiegel
Serial No.: 10/858,952
Filed: June 01, 2004
Attorney Docket No.: **IP-4003US**

DECISION ON PETITION
TO MAKE SPECIAL

This is a decision on the petition under 37 C.F.R. § 1.102, filed June 16, 2004, to make the above-identified application special.

Petitioner requests that the above-identified application be made special under the accelerated examination procedure set forth in the Manual of Patent Examining Procedure (M.P.E.P.), Section 708.02, Item VIII: Accelerated Examination.

A grantable petition to make special under 37 C.F.R. § 1.102 and in accordance with M.P.E.P., Section 708.02, Item VIII, must be accompanied by (a) the fee set forth in 37 C.F.R. § 1.17(i), (b) a statement that all claims are directed a single invention or an offer to make an oral election without traverse should the Patent and Trademark Office hold that the claims are not directed to a single invention, (c) a statement that a pre-examination search has been made by the inventor, attorney, agent, professional searcher, etc., and a listing of the field of search by class and subclass, (d) one copy of each of the references deemed most closely related to the subject matter encompassed by the claims, and (e) a detailed description of the submitted references and discussions pointing out how the claimed subject matter is distinguishable over these references.

The petition satisfies the above requirements. Accordingly, the petition is **GRANTED**.

If the examiner can make this application special without prejudice to any possible interfering applications, and he/she should make a rigid search for such, he/she is authorized to do so for the next action. Should the application be rejected, the application will not be considered special for the subsequent action unless the applicant promptly makes a bona fide effort to place the application in condition for allowance, even if it is necessary to have an interview with the examiner to accomplish this purpose.

If the examiner finds any interfering application for the same subject matter, he/she should consider such application simultaneously with this application and should state in the official letter of such application that she/he is taking it out of its turn because of possible interference.

Should an appeal be taken in this application or should this application becomes involved in an interference, consideration of the appeal and the interference will be expedited by all Patent and Trademark Office officials concerned, contingent likewise upon diligent prosecution by the applicant.

After allowance, this application will be given priority for printing. See M.P.E.P. § 1309.

Inquiries regarding this decision should be directed to Clayton E. LaBalle at (571) 272-1594.

Clayton E. LaBalle, Special Programs Examiner
Technology Center 2800
Semiconductors, Electrical and Optical
Systems and Components

UNITED STATES PATENT AND TRADEMARK OFFICE

FEB 20 2007

Commissioner for Patents
United States Patent and Trademark Office
P.O. Box 1450
Alexandria, VA 22313-1450
www.uspto.gov

HOFFMANN-LA ROCHE INC.
PATENT LAW DEPARTMENT
340 KINGSLAND STREET
NUTLEY, NJ 07110

In re Application of	:
Bernd Buettelmann et al	:
Serial No.: 10/858,969	: PETITION DECISION
Filed: June 2, 2004	:
Attorney Docket No.: 21757 US	:

This is in response to the petition under 37 CFR 1.144, filed December 18, 2006, requesting withdrawal of an improper restriction requirement.

BACKGROUND

A review of the file history shows that this application was filed under 35 U.S.C. 111 on June 2, 2004, and contained claims 1-24. In a first Office action, mailed June 6, 2006, the examiner required restriction between the inventions claimed, as follows:

Group I – the instances where R^3 is aryl;
Group II – the instances where R^3 is pyrrolidine;
Group III – the instances where R^3 is piperazine;
Group IV – the instances where R^3 is morpholine;
Group V – the instances where R^3 is thiomorpholine;
Group VI – Any other compounds not grouped above;
Group VII – Claims 10 and 16, drawn to a process;
Group VIII – Claims 11 and 17, drawn to a process;
Group IX – Claims 12 and 18, drawn to a process;
Group X – Claims 13 and 19, drawn to a process;
Group XI – Claims 14 and 20, drawn to a process;
Group XII – Claims 15 and 21, drawn to a process; and
Group XIII – Claims 23-24, drawn to multiple uses.

An election of species was also required for whichever group was elected.

The examiner reasoned that the compounds of Groups I-VI were drawn to patentably distinct compounds. Groups VII - XII were defined as process claims related to, but distinct from the compound claims; and Group XIII was directed to uses of the compound claims.

Applicants replied on July 10, 2006, electing Group I (or alternatively Group VI, depending on claim interpretation) and traversing the requirement on the basis that restriction within a claim is improper, especially in a Markush group claim. Applicants discussed *In re Weber*, cited by the examiner, to refute the examiner's reasons for making a restriction requirement within a claim and also relied on M.P.E.P. 803.02.

The examiner mailed a new Office action to applicants on September 13, 2006, acknowledging the election of Group VI and the species, and the traversal of the requirement. The examiner maintained the requirement based on essentially the same reasoning as in the previous Office action. The requirement was not made Final. The examiner rejected claim 22 under 35 U.S.C. 112, second paragraph as indefinite. The examiner also rejected claims 1-5, 8-9 and 22 for obvious double patenting over SN 11/141,547, and over SN 10/926,670 in view of Cosford et al.

This petition was filed on December 18, 2006, traversing the restriction requirement as being in error. Applicants also filed a reply to the Office action which has not yet been considered by the examiner pending decision on this petition.

DISCUSSION

Applicants' petition is directed primarily to the restriction between Groups I-VI, directed to the compound claims of formula I as shown:

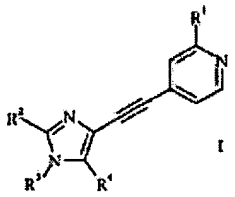

I

As set forth, the examiner based the restriction requirement of the first five Groups on variable R^3 alone. R^3 is a variable attached to the imidazole ring and does not form part of the structure common to all compounds encompassed. Group VI was added to cover any other heterocyclic structures. R^3 is an aryl or heteroaryl which may be substituted by up to three defined values. The examiner did not specifically identify which claims these Groups applied to, but based on the reasoning set forth in the Office action and the claims excluded by Groups VII - XIII, it applies to product claims 1-9 and 22.

Applicants state that the restriction requirement is not in compliance with established case law and Office procedures. Applicants state that intraclaim restriction is not permitted and that the examiner has not followed M.P.E.P. 803.02 which does not permit an examiner created subgenus.

Applicants rely on *In re Weber* for the proposition that restriction within a claim is improper and discuss the reasoning of Weber and the court's conclusion. The compound claims here are directly analogous to the compound claims for which restriction was required in Weber. *In re Weber*, and M.P.E.P. 803.02, prohibit restriction between species where there is a stated common

use or property and there is a substantial common structure present. In the above structure it is clear that there is a substantial common structure comprised of the imidazole ring and the pyridine ring bonded to it by the ethynyl bridge. Thus there is a substantial portion of the structure common to all compounds and a common utility as set forth in the specification and claims. Thus restriction between the compound claims is improper, however an election of species is permissible.

The examiner alleges in justifying the maintaining of the restriction requirement that the structure covers billions of compounds. Based on the limited number of only four variables, R^3 having the majority of values, the number of individual compounds encompassed by the structure appears to be more in the thousands than the billions.

In view of the above the restriction requirement is redefined as:

Group I – claims 1-9 and 22, drawn to compounds;
Group II – Claims 10 and 16, drawn to a process of making;
Group III – Claims 11 and 17, drawn to second a process of making;
Group VI – Claims 12 and 18, drawn to a third process of making;
Group V – Claims 13 and 19, drawn to a fourth process of making;
Group VI – Claims 14 and 20, drawn to a fifth process of amking;
Group VII – Claims 15 and 21, drawn to a sixth process of making; and
Group VIII – Claims 23-24, drawn to multiple uses.

Inasmuch as applicants have elected the product claims of previous Group VI (and a species therein) which is encompassed by new Group I, Group I, and the same species, is considered elected. Further, claims directed to the multiple processes of making, which clearly involve different process steps, or using which encompass all of the limitations of allowed product claims are subject to rejoinder as follows:

The examiner has required restriction between product and process claims. Where applicant elects claims directed to the product, and the product claims are subsequently found allowable, withdrawn process claims that depend from or otherwise require all the limitations of the allowable product claim will be considered for rejoinder. <u>All</u> claims directed to a nonelected process invention must require all the limitations of an allowable product claim for that process invention to be rejoined.

In the event of rejoinder, the requirement for restriction between the product claims and the rejoined process claims will be withdrawn, and the rejoined process claims will be fully examined for patentability in accordance with 37 CFR 1.104. Thus, to be allowable, the rejoined claims must meet all criteria for patentability including the requirements of 35 U.S.C. 101, 102, 103 and 112. Until all claims to the elected product are found allowable, an otherwise proper restriction requirement between product claims and process claims may be maintained. Withdrawn process claims that are not commensurate in scope with an allowable product claim will not be rejoined. See MPEP § 821.04(b). Additionally, in order to retain the right to rejoinder in accordance with the above policy, applicant is advised that the process claims should be amended during prosecution to require the limitations of the product claims. **Failure to do so**

may result in a loss of the right to rejoinder. Further, note that the prohibition against double patenting rejections of 35 U.S.C. 121 does not apply where the restriction requirement is withdrawn by the examiner before the patent issues. See MPEP § 804.01.

DECISION

The petition is **GRANTED.**

The application will be forwarded to the examiner for consideration of applicants' reply filed December 18, 2006, and further action not inconsistent with this decision.

Should there be any questions about this decision please contact William R. Dixon, Jr., by letter addressed to Director, TC 1600, at the address listed above, or by telephone at 571-272-0519 or by facsimile sent to the general Office facsimile number, 571-273-8300.

George C. Elliott

George C. Elliott.
Director, Technology Center 1600

UNITED STATES PATENT AND TRADEMARK OFFICE

COMMISSIONER FOR PATENTS
UNITED STATES PATENT AND TRADEMARK OFFICE
P.O. BOX 1450
ALEXANDRIA, VA 22313-1450
WWW.USPTO.GOV

Paper No. None

VERIZON
PATENT MANAGEMENT GROUP
1515 N. COURTHOUSE ROAD, SUITE 500
ARLINGTON VA 22201-2909

COPY MAILED
DEC 11 2006
OFFICE OF PETITIONS

In re Application of	:	
Ghaffari et al.	:	
Application No. 10/858,973	:	DECISION ON PETITION UNDER
Filed: June 2, 2004	:	37 C.F.R. §1.47(A)
Attorney Docket No. 03-1005	:	
Title: METHODS AND SYSTEMS FOR INTEGRATING COMMUNICATIONS SERVICES	:	

This is in response to the petition under 37 C.F.R. §1.47(a)[1], filed August 7, 2006.

On June 2, 2004, the application was filed, identifying Ghaffari et al. as joint inventors. The application was deposited without a fully executed oath or declaration. On August 11, 2004, a "Notice to File Missing Parts of Nonprovisional Application - Filing Date Granted" (First Notice) was mailed, notifying applicant that a fully executed oath or declaration and the

---

1 A grantable petition under 37 C.F.R. §1.47(a) requires:
(1) the petition fee of $200;
(2) a surcharge of either $65 or $130, if the petition is not filed at the time of filing the application, as set forth in 37 CFR § 1.16(f);
(3) a statement of the last known address of the non-signing inventors;
(4) proof that either:
a) a copy of the entire application (specification, claims, drawings, and the oath or declaration) was sent or given to the non-signing inventor for review and proof that the non-signing inventor refuses to join in the application, or
b) the non-signing inventor cannot be found or reached after diligent effort, and a statement that these efforts were not successful;
(5) a declaration which complies with 37 CFR §1.63.

associated surcharge were required. This First Notice set a two-month period for reply. A response was received on February 11, 2005, along with the associated surcharge and a four-month extension of time. On April 7, 2006, a second "Notice to File Missing Parts of Nonprovisional Application - Filing Date Granted" (Second Notice) was mailed, indicating that the signatures of Messrs. Wurster and Majid were missing. This Second Notice set a two-month period for reply.

With the present petition, Petitioner has submitted a portion of the petition fee (the remainder of which has been charged to his deposit account, as authorized in the petition) proof that a complete copy of the application was sent to Mr. Majid, and a declaration which has been executed by Mr. Wurster. Petitioner has also included a two-month extension of time to make timely this response.

Petitioner has met requirements (1) - (4) of Rule §1.47(a).

Regarding the fifth requirement above, Petitioner has not submitted a declaration which complies with 37 C.F.R. §1.63. The declaration submitted on February 11, 2005 contains non-dated changes by joint inventor Helbling and non-initialed and non-dated changes by joint inventor Reformato.[2]

As such, the petition is **DISMISSED.**

Any reply must be submitted within **TWO MONTHS** from the mail date of this decision. Extensions of time under 37 C.F.R. §1.136(a) are permitted. The reply should include a cover letter entitled "Renewed Petition Under 37 C.F.R. 1.47(a)." This is <u>not</u> a final agency action within the meaning of 5 U.S.C 704.

Any such renewed petition should indicate in a prominent manner that the attorney handling this matter is Paul Shanoski, and may be submitted by mail,[3] hand-delivery,[4] or facsimile transmission (FAX).[5]

Telephone inquiries regarding *this decision* should be directed to the undersigned at (571) 272-3225.[6] All other inquiries

---

2 <u>See</u> 37 C.F.R. §1.52(c)(1) and MPEP 605.04(a).
3 Mail Stop Petition, Commissioner for Patents, United States Patent and Trademark Office, P.O. Box 1450, Alexandria, VA, 22313-1450.
4 Customer Window, Randolph Building, 401 Dulaney Street, Alexandria, VA, 22314.
5 (571) 273-8300- please note this is a central facsimile number.
6 Petitioner will note that all practice before the Office should be in writing, and the action of the Office will be based exclusively on the written

concerning examination procedures or status of the application should be directed to the Technology Center.

Paul Shanoski
Senior Attorney
Office of Petitions
United States Patent and Trademark Office

---

record in the Office. See 37 C.F.R. §1.2. As such, Petitioner is reminded that no telephone discussion may be controlling or considered authority for Petitioner's further action(s).

UNITED STATES PATENT AND TRADEMARK OFFICE

COMMISSIONER FOR PATENTS
UNITED STATES PATENT AND TRADEMARK OFFICE
P.O. BOX 1450
ALEXANDRIA, VA 22313-1450
WWW.USPTO.GOV

COPY MAILED

MAR 30 2007

Paper No. None

OFFICE OF PETITIONS

VERIZON
PATENT MANAGEMENT GROUP
1515 N. COURTHOUSE ROAD, SUITE 500
ARLINGTON VA 22201-2909

RECEIVED
MAR 30 2007
OFFICE OF PETITIONS

CANCELLED

In re Application of	:	
Ghaffari et al.	:	
Application No. 10/858,973	:	DECISION NOTING JOINDER AND
Filed: June 2, 2004	:	DISMISSING RENEWED PETITION
Attorney Docket No. 03-1005	:	UNDER 37 C.F.R. §1.47(A) AS
Title: METHODS AND SYSTEMS FOR	:	MOOT
INTEGRATING COMMUNICATIONS	:	
SERVICES	:	

This is in response to the petition under 37 C.F.R. §1.47(a)[1], filed February 6, 2007.

On June 2, 2004, the application was filed, identifying Ghaffari et al. as joint inventors. The application was deposited without a fully executed oath or declaration. On August 11, 2004, a "Notice to File Missing Parts of Nonprovisional Application - Filing Date Granted" (First Notice) was mailed, notifying

---

1 A grantable petition under 37 C.F.R. §1.47(a) requires:
(1) the petition fee of $200;
(2) a surcharge of either $65 or $130, if the petition is not filed at the time of filing the application, as set forth in 37 CFR § 1.16(f);
(3) a statement of the last known address of the non-signing inventors;
(4) proof that either:
a) a copy of the entire application (specification, claims, drawings, and the oath or declaration) was sent or given to the non-signing inventor for review and proof that the non-signing inventor refuses to join in the application, or
b) the non-signing inventor cannot be found or reached after diligent effort, and a statement that these efforts were not successful;
(5) a declaration which complies with 37 CFR §1.63.

applicant that a fully executed oath or declaration and the associated surcharge were required. This First Notice set a two-month period for reply. A response was received on February 11, 2005, along with the associated surcharge and a four-month extension of time. On April 7, 2006, a second "Notice to File Missing Parts of Nonprovisional Application - Filing Date Granted" (Second Notice) was mailed, indicating that the signatures of Messrs. Wurster and Majid were missing. This Second Notice set a two-month period for reply.

The original petition was filed on August 7, 2006 and was dismissed via the mailing of a decision on December 11, 2006 for failure to include a declaration which complied with Rule §1.63.

With the present renewed petition, an acceptable declaration has been provided.

It is noted that each of the joint inventors have executed the declaration. As such, this renewed petition is **DISMISSED AS MOOT**.

In view of the joinder of the joint inventor, further consideration under 37 CFR §1.47(a) is not necessary and the petition is considered moot. This application does not have any Rule 1.47(a) status and no such status should appear on the file wrapper. This application need not be returned to this Office for further consideration under 37 CFR §1.47(a).

Telephone inquiries regarding this decision should be directed to the undersigned at (571) 272-3225. All other inquiries concerning examination procedures or status of the application should be directed to the Technology Center.

Paul Shanoski

Paul Shanoski
Senior Attorney
Office of Petitions
United States Patent and Trademark Office

UNITED STATES PATENT AND TRADEMARK OFFICE

Commissioner for Patents
United States Patent and Trademark Office
P.O. Box 1450
Alexandria, VA 22313-1450
www.uspto.gov

COPY MAILED
AUG 24 2006
OFFICE OF PETITIONS

MASTERMIND IP LAW PC
421-A SANTA MARINA COURT
ESCONDIDO CA 92029

In re Application of	:	
Brugnara	:	DECISION ON PETITION
Application No. 10/858,975	:	UNDER 37 CFR 1.137(b)
Filed: June 1, 2004	:	
Attorney Docket No. 0021-002US2.DIV1	:	

This is a decision on the petition under 37 CFR 1.137(b), filed April 5, 2006, to revive the above-identified application.

This application became abandoned for failure to reply properly and timely to the final Office Action mailed on June 3, 2005, which set a three (3) month shortened statutory period to reply. Petitioners obtained an extension of time for response within the third month. Accordingly, this application became abandoned on December 4, 2005. A Notice of Abandonment was mailed on February 14, 2006.

Petitioner has met the requirements to revive the above-identified application pursuant to 37 CFR 1.137(b). Petitioner submitted the required reply in the form of an RCE and an amendment, paid the petition fee, and made the proper statement of unintentional delay.

The petition under 37 CFR 1.137(b) is **granted.**

This matter is being referred to Technology Center Art Unit 1624.

Telephone inquiries should be directed to the undersigned at (571) 272-3211. All other inquiries concerning either the examination procedures or status of the application should be directed to the Technology Center.

Christina Tartera Donnell

Christina Tartera Donnell
Senior Petitions Attorney
Office of Petitions

SPE RESPONSE FOR CERTIFICATE OF CORRECTION

Paper No.: X

DATE : July 18, 2008

TO SPE OF : ART UNIT 1624

SUBJECT : Request for Certificate of Correction for Appl. No.: 10/858975 Patent No.: 7342038 B2

A response is requested with respect to a request for a certificate of correction.

With respect to the change(s) requested to correct Office and/or Applicant's errors, should the patent read as shown in the certificate of correction attached herewith or the COCIN document(s), in IFW images for the above-identified patented application? No new matter should be introduced, nor should the scope or meaning of the claims be changed.

If the response is for an IFW, within 7 days, please complete and forward the response, to the employee (named below) via scanning into application images, using document code **COCX**.

DO NOT SENT TO ATTORNEY

If the response is for a paper file wrapper, please complete the response and forward the response with the paper file wrapper, to the employee (named below), within 7 days, to:

Certificates of Correction Branch (CofC)
South Tower - 9A22
Palm Location 7580

You can fax the Directors/SPE response to 571-270-9990

LAMONTE NEWSOME
Certificates of Correction Branch
703-308-9390 ext. 112

Thank You For Your Assistance

The request for issuing the above-identified correction(s) is hereby:
Note your decision on the appropriate box.

X **Approved**	**All** changes apply.
☐ **Approved in Part**	Specify below which changes **do not** apply.
☐ **Denied**	State the reasons for denial below.

Comments: _____

_____

_____

_____

_____

_____ **SPE** _____ **Art Unit**

SPE RESPONSE FOR CERTIFICATE OF CORRECTION

Paper No.: X

DATE : July 18, 2008

TO SPE OF : ART UNIT 1624

SUBJECT : Request for Certificate of Correction for Appl. No.: 10/858975 Patent No.: 7342038 B2

A response is requested with respect to a request for a certificate of correction.

With respect to the change(s) requested to correct Office and/or Applicant's errors, should the patent read as shown in the certificate of correction attached herewith or the COCIN document(s), in IFW images for the above-identified patented application? No new matter should be introduced, nor should the scope or meaning of the claims be changed.

If the response is for an IFW, within **7** days, please complete and forward the response, to the employee (named below) via scanning into application images, using document code **COCX**.

DO NOT SENT TO ATTORNEY

If the response is for a paper file wrapper, please complete the response and forward the response with the paper file wrapper, to the employee (named below), within **7** days, to:

Certificates of Correction Branch (CofC)
South Tower - 9A22
Palm Location 7580

You can fax the Directors/SPE response to 571-270-9990

LAMONTE NEWSOME
Certificates of Correction Branch
703-308-9390 ext. 112

Thank You For Your Assistance

The request for issuing the above-identified correction(s) is hereby:
Note your decision on the appropriate box.

X **Approved**	**All** changes apply.
☐ **Approved in Part**	Specify below which changes **do not** apply.
☐ **Denied**	State the reasons for denial below.

Comments: _____

SPE

1624
Art Unit

UNITED STATES PATENT AND TRADEMARK OFFICE

Commissioner for Patents
United States Patent and Trademark Office
P.O. Box 1450
Alexandria, VA 22313-1450
www.uspto.gov

BRINKS HOFER GILSON & LIONE
P.O. BOX 10395
CHICAGO IL 60610

RECEIVED
DEC 22 2008
OFFICE OF PETITIONS

In re Patent No. 7,370,406	:	
HISAYUKI YAZAWA	:	DECISION ON REQUEST
Issue Date: May 13, 2008	:	FOR RECONSIDERATION OF
Application No. 10/858,999	:	PATENT TERM ADJUSTMENT
Filed: June 2, 2004	:	
Attorney Docket No. 13650-6	:	

This is a decision on the "REQUEST FOR RECONSIDERATION OF PATENT TERM ADJUSTMENT" filed July 18, 2008 (certificate of mailing dated Monday, July 14, 2008). Patentee requests that the Patent Term Adjustment for the above-identified patent be set at 764 days.

The request for reconsideration of the patent term adjustment indicated in the patent is **DISMISSED**.

Patentee is given **TWO (2) MONTHS** from the mailing date of this decision to respond. No extensions of time will be granted under § 1.136.

On May 13, 2008, the above-identified application matured into U.S. Patent No. 7,370,406. The instant request for reconsideration was timely filed on July 18, 2008 (certificate of mailing dated Monday, July 14, 2008). The patent issued with a revised Patent Term Adjustment of 418 days.

Patentees request that the revised Patent Term Adjustment be corrected from 418 days to 764 days. Specifically, patentees assert that a period of adjustment of 346 days should be entered for the Office taking in excess of three (3) years to issue the patent.

The instant patent issued 3 years and 364 days after its filing date. However, any days of delay for Office issuance of the patent more than 3 years after the filing date of the application, which overlap, with the days of patent term adjustment accorded prior to the issuance of the patent will not result in any additional patent term adjustment. Further, in considering the overlap, the entire period during which the application was pending (except for periods excluded under 35 U.S.C. 154(b)(1)(B)(i)-(iii), and not just the period beginning three years after the actual filing date of the application, is the period of delay under 35 U.S.C. 154(b)(1)(B) in determining whether periods of delay overlap under 35 U.S.C. 154(b)(2)(A). See 35 U.S.C. 154(b)(1)(B); 35 U.S.C. 154(b)(2)(A); and 37 CFR 1.703(f).

In this instance, the period of delay of 364 days attributable to the delay in the issuance of the patent overlaps with the adjustment of 479 days attributable to grounds specified in § 1.702(a)(1). Thus, no additional period of adjustment beyond 479 days was entered. Accordingly, the period of 479 days for Office delay is correct.

In view thereof, the patent term adjustment of **418 days** indicated in the patent is correct.

The Office will charge the Deposit Account for the $200.00 fee set forth in 37 CFR 1.18(e) as authorized.

Telephone inquiries specific to this matter should be directed to Christina Tartera Donnell, Senior Petitions Attorney, at (571) 272-3211.

Nancy Johnson

Nancy Johnson
Senior Petitions Attorney
Office of Petitions

UNITED STATES PATENT AND TRADEMARK OFFICE

Commissioner for Patents
United States Patent and Trademark Office
P.O. Box 1450
Alexandria, VA 22313-1450
www.uspto.gov

WILLIAMS, MORGAN & AMERSON, P.C.
10333 RICHMOND, SUITE 1100
HOUSTON TX 77042

COPY MAILED

APR 0 5 2005

OFFICE OF PETITIONS

ON PETITION

In re Application of	:
John T. Moore	:
Application No. 10/859,016	:
Filed: June 1, 2004	:
Attorney Docket No. 2008.004982	:

This is a decision on the petition, filed March 31, 2005, under 37 CFR 1.313(c)(2) to withdraw the above-identified application from issue after payment of the issue fee.

The petition is **GRANTED.**

The above-identified application is withdrawn from issue for consideration of a submission under 37 CFR 1.114 (request for continued examination). See 37 CFR 1.313(c)(2).

Petitioner is advised that the issue fee paid in the above-identified application cannot be refunded. If, however, the above-identified application is again allowed, petitioner may request that it be applied towards the issue fee required by the new Notice of Allowance.[1]

Telephone inquiries should be directed to the undersigned at (571) 272-3208.

The examiner of Technology Center AU 2818 will consider the request for continued examination under 37 CFR 1.114.

Karen Creasy

Karen Creasy
Petitions Examiner
Office of Petitions
Office of the Deputy Commissioner
for Patent Examination Policy

---

[1] The request to apply the issue fee to the new Notice may be satisfied by completing and returning the new Issue Fee Transmittal Form PTOL-85(b), which includes the following language thereon: "Commissioner for Patents is requested to apply the Issue Fee and Publication Fee (if any) or re-apply any previously paid issue fee to the application identified above." Petitioner is advised that, whether a fee is indicated as being due or not, the Issue Fee Transmittal Form **must** be completed and timely submitted to avoid abandonment. Note the language in bold text on the first page of the Notice of Allowance and Fee(s) Due (PTOL-85).

UNITED STATES PATENT AND TRADEMARK OFFICE

COMMISSIONER FOR PATENTS
UNITED STATES PATENT AND TRADEMARK OFFICE
P.O. BOX 1450
ALEXANDRIA, VA 22313-1450
www.uspto.gov

Paper No. _____

Date : April 5, 2005

TO : Director, Office of Patent Publication

FROM : Office of the Deputy Commissioner
for Patent Examination Policy

SUBJECT : Withdrawal from Issue of

Applicant(s) :John T. Moore
Application No. :10/859,016
Filed :June 1, 2004

The above-identified application has been assigned Patent No. 6,881,625 and an issue date of April 19, 2005.

It is hereby directed that this application be withdrawn from issue at the request of the applicant.

Do not refund the issue fee.

The following erratum should be published in the Official Gazette if the above-identified application is published in the OG of April 19, 2005:

> "All reference to Patent No. 6,881,625 to John T. Moore of Idaho for GLOBAL COLUMN SELECT STRUCTURE FOR ACCESSING A MEMORY appearing in the Official Gazette of April 19, 2005 should be deleted since no patent was granted."

Karen Creasy

Karen Creasy
Petitions Examiner
Office of Petitions
Office of the Deputy Commissioner
for Patent Examination Policy

cc: Paul Harrison, MDW-4B03, (FAX-273-5468
Deneise Boyd, MDE-3D39 (FAX-273-5124)
Mary Louise McAskill, ST-8C15 (FAX 305-4372)
Niomi Farmer, ST-8C14 (FAX-305-4372)
Mary E. Johnson (Cookie), MDE-7C71 (FAX 273-0038)
Duane Davis P/OPC MDE-7D89
Tamara Greene, ST-8C13

UNITED STATES PATENT AND TRADEMARK OFFICE

Commissioner for Patents
United States Patent and Trademark Office
P.O. Box 1450
Alexandria, VA 22313-1450
www.uspto.gov

MCI, INC
1133 19TH STREET NW
4TH FLOOR
WASHINGTON DC 20036

COPY MAILED
MAR 3 1 2006
OFFICE OF PETITIONS

In re Application of
Delregno, Kotrla, McDysan, Bencheck, Turlington, Hardin
Schell, Chiu, and Drake
Application No.: 10/859,057
Filed: June 2, 2004
Attorney Docket No: RIC04012
For: PROVIDING APPLETS TO REMOTE DEVICES IN A COMMUNICTAIONS NETWORK

: DECISION ACCORDING
: RULE 47(a) STATUS

This is in response to the petition under 37 CFR 1.47(a), filed October 26, 2004.

The petition is **GRANTED**.

The above-identified application and papers have been reviewed and found in compliance with 37 CFR 1.47(a). This application is hereby accorded Rule 1.47(a) status.

The above-cited application was filed on June 2, 2004, without an oath or declaration. A Notice to File Missing Parts of Nonprovisional Application was mailed on July 27, 2004, requiring an executed oath or declaration and surcharge, filing and claim fees. The notice allowed an extendable period for reply of two months from its mailing date. The instant petition was filed responsively on October 26, 2004, with a request for an extension of time within the first month.

Petitioner has shown that inventor Drake has constructively refused to join the application after having been presented with the application papers. The above-identified application and papers have been reviewed and found in compliance with 37 CFR 1.47(a). This application is hereby accorded Rule 1.47(a) status.

As provided in Rule 1.47(c), this Office will forward notice of this application's filing to the non-signing inventors at the addresses given in the petition. Notice of the filing of this application will also be published in the Official Gazette.

The petition fee of $130.00 will be charged to deposit account 13-2491.

This application will be directed to the Office of Initial Patent Examination for further processing.

Telephone inquiries should be directed to the undersigned at (571) 272-3222.

Kenya A. McLaughlin
Petitions Attorney
Office of Petitions

UNITED STATES PATENT AND TRADEMARK OFFICE

Commissioner for Patents
United States Patent and Trademark Office
P.O. Box 1450
Alexandria, VA 22313-1450
www.uspto.gov

HANSRA PATENT SERVICES
4525 GLEN MEADOWS PLACE
BELLINGHAM, WA 98226

COPY MAILED

JUN 18 2007

OFFICE OF PETITIONS

In re Application of	:	
REWERTS, David et al.	:	
Application No. 10/859,058	:	DECISION ON PETITION
Filed: June 02, 2004	:	TO WITHDRAW
Attorney Docket No. **6520**	:	FROM RECORD
	:	

This is a decision on the Request to Withdraw as attorney or agent of record under 37 C.F.R. § 1.36(b), filed October 06, 2006.

The request is **NOT APPROVED** as moot.

A review of the file record indicates that the power of attorney to SEAGATE TECHNOLOGY LLC has been revoked by the assignee of the patent application on November 28, 2006. Accordingly, the request to withdraw under 37 C.F.R. § 1.36(b) is moot.

All future communications from the Office will continue to be directed to the below-listed address until otherwise notified by applicant.

Telephone inquires concerning this decision should be directed to Tredelle Jackson at 571-272-2783.

Monica A. Graves
Petitions Examiner
Office of Petitions

cc: **FELLERS, SNIDER, BLANKENSHIP,**
BAILEY & TIPPEOS P.C.
100 NORTH BROADWAY, SUITE 1700
OKLAHOMA CITY OK 73102-8820

UNITED STATES PATENT AND TRADEMARK OFFICE

COMMISSIONER FOR PATENTS
UNITED STATES PATENT AND TRADEMARK OFFICE
P.O. BOX 1450
ALEXANDRIA, VA 22313-1450
www.uspto.gov

TEJPAL S. HANSRA
HANSRA PATENT SERVICES
4525 GLEN MEADOWS PLACE
BELLINGHAM, MA 98226

COPY MAILED

MAY 17 2007

OFFICE OF PETITIONS

In re Application of :
Jay Jeong et al :
Application No. 10/859,061 : DECISION ON PETITION
Filed: June 2, 2004 : TO WITHDRAW
Attorney Docket No. 3123-581 : FROM RECORD

This is a decision on the Request to Withdraw as attorney or agent under 37 C.F.R. § 1.36(b) or 37 C.F.R. § 10.40 filed November 13, 2006.

The request is **APPROVED**.

A review of the file record indicates that Tejpal S. Hansra: (1) does not have power of attorney in this patent application; and (2) has been employed or otherwise engaged in the proceedings in this patent application. In view of the present decision, Jejpal S. Hansra, who is withdrawing on behalf of himself and all the attorneys of record, has been withdrawn from the present application and may not prepare or submit papers under 37 C.F.R. § 1.34, or correspond in any manner in this application unless appointed in an acceptable power of attorney under 37 C.F.R. § 1.32(b).

The request to change the correspondence of record is not acceptable as the requested correspondence address is not that of: (1) the first named signing inventor; or (2) the intervening assignee of the entire interest. It is noted that a power of attorney, signed by William O. Sweeney, Associate General Counsel for assignee, Maxtor Corporation, was filed on December 27, 2004 and accepted on March 29, 2005. However, as the power of attorney does not comply with the provisions of 37 CFR 3.73(b), the acceptance thereof was improper. Therefore, as the assignee of the entire interest has not successfully intervened, all future communications from the Office will be directed to the first named signing inventor at the first copied address below until otherwise properly notified by the applicant. A courtesy copy of this decision is being mailed to the address of the customer number noted on the request. If the attorneys associated with customer number 23043 wish to receive communications regarding this application, the appropriate power of attorney documents must be submitted. Compliance with 37 CFR 3.73(b) must be satisfied if the power of attorney is from an assignee.

A petition to revive under the provisions of 37 CFR 1.137(b) was filed on October 2, 2006 for failure to timely reply to the non-final Office action of October 5, 2005. A decision granting the petition to revive is being mailed of even date.

Telephone inquires concerning this decision should be directed to the undersigned at 571-272-3218.

Frances Hicks
Petitions Examiner
Office of Petitions

cc:

Jay Jeong
4856 Dakota Boulevard
Boulder, CO 80404

SeaGate Technology LLC
Intellectual Property – SHK2LG
1280 Disc Drive
Shakopee, MN 55379

UNITED STATES PATENT AND TRADEMARK OFFICE

COMMISSIONER FOR PATENTS
UNITED STATES PATENT AND TRADEMARK OFFICE
P.O. BOX 1450
ALEXANDRIA, VA 22313-1450
www.uspto.gov

JAY JEONG
4856 DAKOTA BOULEVARD
BOULDER, CO 80404

COPY MAILED

MAY 17 2007

OFFICE OF PETITIONS

In re Application of :
Jay Jeong et al :
Application No. 10/859,061 : DECISION ON PETITION
Filed: June 2, 2004 :
For: METHOD AND APPARATUS FOR :
PROVIDING AN ABSOLUTE REFERENCE POINT
ON A DISK OF A DISK DRIVE THAT HAS
SPIRAL SERVO PATTERNS WRITTEN THEREON

This is a decision on the petition under 37 CFR 1.137(b), filed October 2, 2006, to revive the above-identified application.

The petition is **GRANTED.**

The application became abandoned for failure to reply in a timely manner to the non-final Office action mailed, October 5, 2005, which set a shortened statutory period for reply of three (3) months. No extensions of time were obtained under the provisions of 37 CFR 1.136(a). Accordingly, the application became abandoned on January 6, 2006. A Notice of Abandonment was mailed on June 22, 2006.

The petition satisfies the requirements of 37 CFR 1.137(b) in that petitioner has supplied (1) a reply, (2) the petition fee of $1,500, and (3) a proper statement of unintentional delay. Accordingly, the failure to timely reply to the non-final Office action of October 5, 2005 is accepted as being unintentionally delayed.

In view of the non-acceptance of the change of address in the request to withdraw as attorney filed on November 13, 2006, a courtesy copy of this decision is being mailed to the customer number noted thereon.

This application is being referred to Technology Center AU 2627 for appropriate action in the normal course of business on the reply received October 2, 2006.

Telephone inquiries concerning this decision should be directed to the undersigned at (571) 272-3218.

Frances Hicks
Petitions Examiner
Office of Petitions

cc:

SeaGate Technology LLC
Intellectual Property - SHK2LG
1280 Disc Drive
Shakopee, MN 55379

UNITED STATES PATENT AND TRADEMARK OFFICE

Commissioner for Patents
United States Patent and Trademark Office
P.O. Box 1450
Alexandria, VA 22313-1450
www.uspto.gov

COPY MAILED

JAN 10 2007

OFFICE OF PETITIONS

Hansra Patent Services
4525 Glen Meadows Place
Bellingham, WA 98226

In re Application of

Bruce Liikanen et al.
Application No. 10/859,062
Filed: June 2, 2004
Attorney Docket No. 3123-568

DECISION ON PETITION
TO WITHDRAW
FROM RECORD

This is a decision on the Request to Withdraw as attorney or agent of record under 37 C.F.R. § 1.36(b), filed October 13, 2006.

The request is **APPROVED**.

A grantable request to withdraw as attorney/agent of record must be signed by every attorney/agent seeking to withdraw or contain a clear indication that one attorney is signing on behalf of another/others. A request to withdraw will not be approved unless at least 30 (thirty) days would remain between the date of approval and the later of the expiration date of a time to file a response or the expiration date of the maximum time period which can be extended under 37 C.F.R. § 1.136(a).

The request was signed by Tejpal S. Hansra on behalf of all attorneys of record.

All attorneys/agents associated have been withdrawn.

Applicant is reminded that there is no attorney of record at this time.

The request to change the correspondence of record is not acceptable as the requested correspondence address is not that of: (1) the first named signing inventor; or (2) an intervening assignee of the entire interest under 37 C.F.R 3.71. All future communications from the Office will be directed to the first named signing inventor at the first copied address below until otherwise properly notified by the applicant.

There is no outstanding Office action at this time.

Telephone inquiries concerning this decision should be directed to Terri Williams at 571-272-2991.

T. Williams

Terri Williams
Petitions Examiner
Office of Petitions

cc: **Bruce Liikanen**
7926 Lakota Ridge Lane
Berthoud, CO 80513

cc: **Seagate Technology LLC**
Intellectual Property—SHK2LG
1280 Disc Drive
Shakopee, MN 55379

UNITED STATES PATENT AND TRADEMARK OFFICE

COMMISSIONER FOR PATENTS
UNITED STATES PATENT AND TRADEMARK OFFICE
P.O. BOX 1450
ALEXANDRIA, VA 22313-1450
www.uspto.gov

Paper No.

Fellers, Snider, Blankenship,
Bailey & Tippens, P.C.
100 North Broadway, Suite 1700
Oklahoma City, OK 73102-8820

COPY MAILED
DEC 22 2008

In re Application of	:	
Liikanen et al.	:	DECISION ON PETITION
Application No. 10/859,062	:	
Filed: June 2, 2004	:	
Atty Docket No. 3123-568	:	

This is a decision on the PETITION FOR REVIVAL OF AN APPLICATION FOR PATENT ABANDONED UNAVOIDABLY UNDER 37 CFR §1.137(a), filed July 10, 2008, in the above-identified application.

The petition is **GRANTED**.

The above-identified application became abandoned for failure to file a reply to the non-final Office action mailed October 2, 2007. The Office set a three-month shortened statutory period for reply, with extensions of time obtainable under 37 CFR 1.136(a). No reply received and no extensions of time obtained, the application became abandoned effective January 3, 2008. A Notice of Abandonment was mailed on April 10, 2008.

Petitioner maintains that the entire delay in filing the required reply from the due date of the reply until the filing of a grantable petition was unavoidable. Petitioner points to the filing of a change of correspondence address filed on June 8, 2007, but not accepted by the Office until April 9, 2008. Further, the Office mailed the non-final Office action mailed October 2, 2007 to the first-named inventor rather then to the address as set forth on the change of correspondence address.

The petition includes the required reply in the form of an amendment, payment of the petition fee and a showing of unavoidable delay. No terminal disclaimer is required. The facts and circumstances of the abandonment as set forth on petition have been considered, and it is concluded that petitioner has met his burden of establishing that the entire delay from the due date for the reply until the filing of a grantable petition was unavoidable.

Technology Center AU 2627 has been advised of this decision. The application is, thereby, forwarded to the examiner for consideration of the amendment filed on petition filed July 10, 2008.

Telephone inquiries related to this decision may be directed to the undersigned at (571) 272-3219.

Nancy Johnson

Nancy Johnson
Senior Petitions Attorney
Office of Petitions

UNITED STATES PATENT AND TRADEMARK OFFICE

UNITED STATES DEPARTMENT OF COMMERCE
United States Patent and Trademark Office
Address: COMMISSIONER FOR PATENTS
P.O. Box 1450
Alexandria, Virginia 22313-1450
www.uspto.gov

DAVID K. LUCENTE; SEAGATE TECHNOLOGY LLC
INTELLECTUAL PROPERTY DEPT. - COL2LGL
389 DISC DRIVE
LONGMONT, CO 80503

Mail Date: 04/21/2010

Applicant	: Bruce Liikanen	: DECISION ON REQUEST FOR
Patent Number	: 7623313	: RECALCULATION of PATENT
Issue Date	: 11/24/2009	: TERM ADJUSTMENT IN VIEW
Appliction No	: 10/859,062	: OF WYETH AND NOTICE OF INTENT TO
Filed	: 06/02/2004	: ISSUE CERTIFICATE OF CORRECTION
		:

The Request for Recalculation is **GRANTED** to the extent indicated.

The patent term adjustment has been determined to be **514** days. The USPTO will *sua sponte* issue a certificate of correction reflecting the amount of PTA days determined by the recalculation.

Prior to the issuance of the certificate of correction, the USPTO will afford patentee an opportunity to be heard and request reconsideration. Accordingly, patentee has **one month or thirty (30) days**, whichever is longer, to file a request for reconsideration of this patent term adjustment calculation. See 35 U.S.C. 154(b)(3)(B)(ii) and 37 CFR 1.322(a)(4). No extensions of time will be granted under 37 CFR 1.136.

Patentee should use document code PET.OP if electronically filing a request for reconsideration of this patent term adjustment calculation. The patentee must also include the information required by 37 CFR 1.705(b)(2) and the fee required by 37 CFR 1.18(e). If patentee does not file a timely request for reconsideration of this patent term adjustment calculation including the information required by 37 CFR 1.705(b)(2) and the fee required by 37 CFR 1.18(e), the USPTO will issue a certificate of correction reflecting the PTA determination noted above.

Patentee should be aware that in order to preserve the right to review in the United States District Court for the District of Columbia of the USPTO patent term adjustment determination, patentee must ensure that he or she also take the steps required under 35 U.S.C. 154(b)(4)(A) in a timely manner. Nothing in the request for recalculation should be construed as providing an alternative time frame for commencing a civil action under 35 U.S.C. 154(b)(4)(A).

Any questions concerning this decision should be directed to the Office of Patent Legal Administration at 571-272-7702.

UNITED STATES PATENT AND TRADEMARK OFFICE

Commissioner for Patents
United States Patent and Trademark Office
P.O. Box 1450
Alexandria, VA 22313-1450
www.uspto.gov

JUL 13 2005

In re Application of:	:	
Donald C.L. Tang	:	
Application No. 10/859,072	:	DECISION ON PETITION
Filed: June 3, 2004	:	
For: DOUBLE SEAL SELF-VENTING CONTAINER	:	

This is a decision on the petition to make special filed September 7, 2004. The petition is submitted pursuant to the practice established in MPEP §708.02(I) "Manufacture." The $130.00 petition fee has been received.

The petition is granted.

A review of the petition shows that petitioner has satisfied all of the requirements of the above cited MPEP section. Accordingly, the examiner will treat this application as special throughout its prosecution. Prior to the first action on the merits, the examiner will conduct a rigorous search for potentially interfering applications. The interference search will be brought up to date prior to each successive action.

The Supervisory Patent Examiner of Patent Examining Art Unit 3727 will be notified of this decision, and will inform the assigned examiner to take action not inconsistent with this decision.

PETITION GRANTED.

Richard A. Bertsch, Director
Technology Center 3700

Vincent L. Ramik
Diller, Ramik & Wight
7345 McWhorter Place, Suite 101
Annandale, VA 22003

UNITED STATES PATENT AND TRADEMARK OFFICE

Commissioner for Patents
United States Patent and Trademark Office
P.O. Box 1450
Alexandria, VA 22313-1450
www.uspto.gov

MATTINGLY, STANGER, MALUR & BRUNDIDGE, P.C.
1800 DIAGONAL ROAD
Suite 370
ALEXANDRIA, VA 22314

MAILED

JUL 19 2006

TECHNOLOGY CENTER 2100

In re Application of: KANAI, HIROKI
Application No. 10/859,176
Filed: 3 June 2004
For: STORAGE CONTROL SYSTEM

DECISION ON PETITION
TO MAKE SPECIAL
(ACCELERATED EXAMINATION)
UNDER M.P.E.P. §708.02 (VIII)

This is a decision on the petition that was filed 26 October 2005, to make special the above-identified application under 37 CFR §102(d) and MPEP §708.02(VIII): Accelerated Examination.

The Petition is **GRANTED**.

M.P.E.P. § 708.02, Section VIII which sets out the prerequisites for a grantable petition for Accelerated Examination under 37 C.F.R. § 102(d) states in relevant part:

A new application (one which has not received any examination by the examiner) may be granted special status provided that applicant (and this term includes applicant's attorney or agent) complies with each of the following items:

(a) Submits a petition to make special accompanied by the fee set forth in 37 CFR 1.17(h);

(b) Presents all claims directed to a single invention, or if the Office determines that all the claims presented are not obviously directed to a single invention, will make an election without traverse as a prerequisite to the grant of special status;

(c) Submits a statement(s) that a pre-examination search was made, listing the field of search by class and subclass, publication, Chemical Abstracts, foreign patents, etc. The pre-examination search must be directed to the invention as claimed in the application for which special status is requested. A search made by a foreign patent office satisfies this requirement;

(d) Submits one copy each of the references deemed most closely related to the subject matter encompassed by the claims if said references are not already of record; and

(e) Submits a detailed discussion of the references, which discussion points out, with the particularity required by 37 CFR 1.111 (b) and (c), how the claimed subject matter is patentable over the references.

Petition to Make Special **GRANTED** since all of the requirements for special status under MPEP § 708.02(VIII) have been met.

The application is being forwarded to the Examiner for accelerated examination in accordance with M.P.E.P. §708.02, Section VIII. If the application is subsequently allowed, it will be given priority for printing. See M.P.E.P. §1309.

Brian L. Johnson
Special Programs Examiner
Technology Center 2100
Computer Architecture, Software and Information Security
571-272-3595

GO