UNITED STATES PATENT AND TRADEMARK OFFICE

Commissioner for Patents
United States Patent and Trademark Office
P.O. Box 1450
Alexandria, VA 22313-1450
www.uspto.gov

BAKER BOTTS L.L.P.
30 ROCKEFELLER PLAZA
44TH FLOOR
NEW YORK NY 10112-449

COPY MAILED

AUG 26 2008

OFFICE OF PETITIONS

In re Patent No. 7,318,507 :
Issue Date: January 15, 2008 :
Application No. 10/894,990 :
Filed: July 20, 2004 :
Attorney Docket No. AP35771-072841.0257 :

NOTICE

This is a notice regarding your request for acceptance of a fee deficiency submission under 37 CFR 1.28. On September 1, 1998, the Court of Appeals for the Federal Circuit held that 37 CFR 1.28(c) is the sole provision governing the time for correction of the erroneous payment of the issue fee as a small entity. **See DH Technology v. Synergystex International, Inc. 154 F.3d 1333, 47 USPQ2d 1865 (Fed. Cir. Sept. 1, 1998).**

The Office no longer investigates or rejects original or reissue applications under 37 CFR 1.56. **1098 Off. Gaz. Pat. Office 502 (January 3, 1989)**. Therefore, nothing in this Notice is intended to imply that an investigation was done.

Your fee deficiency submission under 37 CFR 1.28 is hereby **ACCEPTED**.

This patent is no longer entitled to small entity status. Accordingly, all future fees paid in this patent must be paid at the large entity rate.

Liana Walsh
Petitions Examiner
Office of Petitions

UNITED STATES PATENT AND TRADEMARK OFFICE

Commissioner for Patents
United States Patent and Trademark Office
P.O. Box 1450
Alexandria, VA 22313-1450
www.uspto.gov

MARSHALL, GERSTEIN & BORUN LLP
233 S. WACKER DRIVE, SUITE 6300
SEARS TOWER
CHICAGO IL 60606

COPY MAILED

SEP 07 2005

OFFICE OF PETITIONS

In re Application of :
Emil D. KAKKIS :
Application No. 10/895,011 :
Filed: July 20, 2004 :
Attorney Docket No. 30610/30008A :

ON PETITION

This is a decision on the petition under 37 CFR 1.137(b), filed August 15, 2005, to revive the above-identified application.

The petition is **GRANTED**.

The above-identified application became abandoned for failure to file a proper reply in a timely manner to the Notice to File Missing Parts of Nonprovisional Application mailed November 17, 2004, which set a shortened statutory period for reply of two (2) months. No extensions of time under the provisions of 37 CFR 1.136(a) were obtained. Accordingly, the above-identified application became abandoned on January 18, 2005.

The petition satisfies the conditions for revival pursuant to the provisions of 37 CFR 1.137(b) in that (1) the reply in the form of the required fees, oath or declaration, and replacement drawings; (2) the petition fee of $1500; and (3) the required statement of unintentional delay have been received. Accordingly, the reply to the Notice to File Missing Parts of Nonprovisional Application of November 17, 2004 is accepted as having been unintentionally delayed.

Telephone inquiries concerning this decision should be directed to David A. Bucci at (571) 272-7099 or in his absence to the undersigned at (571) 272-3217.

The application is being referred to the Office of Initial Patent Examination.

Brian Hearn
Petitions Examiner
Office of Petitions

UNITED STATES PATENT
AND TRADEMARK OFFICE

Commissioner for Patents
United States Patent and Trademark Office
P.O. Box 1450
Alexandria, VA 22313-1450
www.uspto.g

Date Mailed: March 3, 2009
Patent No. :7,061,697 B2
Ser. No. :10/895012
Inventor(s) :Pierangelo Magni, et al.

Title : METHOD FOR FIXING A LENS OF AN OPTIC GROUP WITH RESPECT TO AN OPTICAL SENSOR INSIDE AN ELECTRONIC DEVICE ABLE TO ACQUIRE IMAGES AND CORRECPONDING DEVICE

Request for Certificate of Correction

Consideration has been given your request for the issuance of a certificate of correction for the above-identified patent under the provisions of Rule(s) 1.322 and/or 1.323.

Assignees' names and addresses (assignment data) printed in a patent, are based *solely* on information supplied in the appropriate space for identifying the assignment data, i.e., item 3 of the Issue Fee Transmittal Form PTOL-85B. Granting of a request under 37 CFR 3.81(b) is required to correct applicant's error providing ***incorrect or erroneous*** assignment data, *before* issuance of a Certificate of Correction, under 37 CFR 1.323 *(see Manual of Patent Examining Procedures (M.P.E.P) Chp.1400, sect. 1481).* This procedure is required *at any time after the issue fee is paid*, including after issuance of the patent.

In view of the foregoing, your request in this matter is hereby denied.

A request to correct the Assignee under 37 CFR 3.81(b) should include:

A. **the processing fee set forth in 37 CFR 1.117(h) (currently $130);**
B. a statement that the failure to include the correct assignee name on the PTOL-85B was inadvertent; and
C. a copy of the Notice of Recordation of Assignment Document, reflecting the reel and frame number where the assignment(s) is recorded and/or reflecting proof of *the date* the assignment was submitted for recordation.

In the Request, Applicant(s) may request that the file be forwarded to Certificates of Correction Branch, for issuance of a Certificate of Correction, if the Request is granted.

Any request under 37 CFR 3.81(b) should be directed to the following address or facsimile number:

By mail: Mail Stop PETITIONS
Commissioner for Patents
Post Office Box 1450
Alexandria, VA 22313-1450

By hand: Customer Service Window
Mail Stop Petitions
Randolph Building
401 Dulany Street
Alexandria, VA 22314

By fax: (571) 273-0025
ATTN: Office of Petitions

If a fee (currently $100) was previously submitted for consideration of a Request for Certificate of Correction, under CFR 1.323, to correct assignment data, no additional fee is required.

Magdalene Talley
For Mary F. Diggs, Supervisor
Decisions & Certificates
of Correction Branch
(703) 308-9390 ext. 116

Bryan A. Santarelli
C155-108 Avenue NE, Ste. 350
Bellevue, WA 98004-5901

MD/mt

UNITED STATES PATENT AND TRADEMARK OFFICE

COMMISSIONER FOR PATENTS
UNITED STATES PATENT AND TRADEMARK OFFICE
P.O. BOX 1450
ALEXANDRIA, VA 22313-1450
www.uspto.gov

JJGJR.: 01-05

Paper No: __

COPY MAILED
JAN 14 2005
OFFICE OF PETITIONS

FINNEGAN, HENDERSON, FARABOW,
GARRETT & DUNNER, LLP
901 NEW YORK AVENUE, NW
WASHINGTON DC 20001-4413

In re Application of
Kimura, et al. :
Application No. 10/895,036 : DECISION ON PETITION
Filing Date: 21 July, 2004
Attorney Docket No. 2860.069301 :

This is a decision on the petition filed on 5 October, 2004, and considered under 37 C.F.R. §1.53, to obtain a filing date of 21 July, 2004, for Page 220, specification of the application.

The petition is **GRANTED**.

BACKGROUND

This nonprovisional application was deposited on 21 July, 2004.

On 14 September, 2004, the Office mailed a "Notice of Omitted Items in a Nonprovisional Application," (the 14 September Notice) and indicated, *inter alia*, that Page 220, specification of the application, appeared to be missing on deposit of the application.

The 14 September Notice further informed Petitioner that, should he contend that the missing figure was deposited with the rest of the application at the time of filing, he could petition and make a showing to that effect, or he could accept the application as filed, or could submit the missing figure and accept the date of that submission as the date of filing.

The petition filed on 5 October, 2004, states that it is accompanied, *inter alia*, by a date-stamped receipt card itemizing the contents of the application received by the Office and a copy of Page 220, specification of the application.

ANALYSIS

A review of the record reveals that:

- the instant application was deposited with the Office on 21 July, 2004; and
- the receipt card (see: MPEP §503[1]) is date stamped ("JUL 21 2004") and provides, *inter alia*:

* * *

> 3. Copy of Patent application including specification (327 pages), drawings (62 pages including Figs. 1-77) and Declaration and Power of Attorney (2 pages)

* * *

---

[1] MPEP §503 provides in pertinent part:

§503 Application Number and Filing Receipt

* * *

A return postcard should be attached to *each* patent application for which a receipt is desired. It is important that the return postcard itemize all of the components of the application. If the postcard does not itemize each of the components of the application, it will not serve as evidence that any component which was not itemized was received by the United States Patent and Trademark Office (USPTO). It should be recognized that the identification of an application by application number does not necessarily signify that the USPTO has accepted the application as complete (37 C.F.R. §1.53(a)).

* * *

RETURN POSTCARD

If a receipt of any item (e.g., paper or fee) filed in the USPTO is desired, it may be obtained by enclosing with the paper a self-addressed postcard specifically identifying the item. The USPTO will stamp the receipt date on the postcard and place it in the outgoing mail. A postcard receipt which itemizes and properly identifies the items which are being filed serves as *prima facie* evidence of receipt in the USPTO of all the items listed thereon on the date stamped thereon by the USPTO.

The identifying data on the postcard should be so complete as to clearly identify the item for which receipt is requested. For example, the postcard should identify the applicant's name, application number (if known), confirmation number (if known), filing date, interference number, title of the invention, etc. The postcard should also identify the type of paper being filed, e.g., new application, affidavit, amendment, notice of appeal, appeal brief, drawings, fees, motions, supplemental oath or declaration, petition, etc., and the number of pages being submitted. If a new application is being filed, all parts of the application being submitted should be separately listed on the postcard, e.g., the number of pages of specification (including written description, claims and abstract), number of claims, number of sheets of drawings, number of pages of oath/declaration, number of pages of cover sheet (provisional application).

The postcard receipt will not serve as *prima facie* evidence of receipt of any item which is not adequately itemized on the postcard. For example, merely listing on the postcard "a complete application" or "patent application" will not serve as a proper receipt for each of the required components of an application (e.g., specification (including claims), drawings (if necessary), oath or declaration and the application filing fee) or missing portions (e.g., pages, sheets of drawings) of an application if one of the components or portion of a component is found to be missing by the USPTO. Each separate component should be specifically and properly itemized on the postcard. Furthermore, merely incorporating by reference in the postcard receipt, the items listed in a transmittal letter will not serve as *prima facie* evidence of receipt of those items.

The person receiving the item(s) in the USPTO will check the listing on the postcard against the item(s) being filed to be sure they are properly identified and that all the items listed on the postcard are presently being submitted to the USPTO. If any of the items listed on the postcard are not being submitted to the USPTO, those items will be crossed off and the post-card initialed by the person receiving the items. Upon return of a postcard receipt from the USPTO, the postcard receipt should be promptly reviewed by the person who filed the items to ensure that every item specifically denoted on the postcard was received by the USPTO. If the postcard receipt has been annotated to indicate that a particular item denoted on the postcard was not received by the USPTO, the postcard receipt will not serve as *prima facie* evidence of receipt of that item in the USPTO. (Emphasis supplied.)

The record further discloses that:

- the pages that the Office acknowledges receiving are Pages 1 - 219 and 221 - 327; and
- the application pages are sequentially numbered 1 - 251 (specification), 252 - 326 (claims), and 327 (abstract).

Because the return postcard receipt properly itemizes the contents of the application package in accordance with MPEP §503, the Office concludes that the Page 220 (specification) was submitted on 21 July, 2004, and subsequently was misplaced in the Office.

Accordingly, the petition under 37 C.F.R. §1.53 is **granted**; the petition fee is waived and is refunded via Treasury check, and the Notice mailed on 14 September, 2004, hereby is withdrawn as to Page 220 (specification).

This application is released to the Office of Initial Patent Examination for further processing with a filing date of 21 July, 2004, for the entire application and in particular for Page 220 (specification) using:

- pages 1 - 219 and 221 - 327 (Specification, Claims, Abstract), and 62 sheets of drawings (Fig(s). 1 - 77) deposited on 21 July, 2004; and
- Page 220 (specification), deposited on 5 October, 2004;
- with direction to OIPE to correct Office records to reflect that 327 pages of specification (description, claims and abstract) and 62 sheets of drawings were present on filing on 21 July, 2004, and forward to Petitioner a corrected filing receipt setting forth a filing date of 21 July, 2004, reflecting therein that 327 pages of specification (description, claims and abstract) and 62 sheets of drawings were present on filing.

Thereafter, the application will be considered by the examiner in due course.

Telephone inquiries concerning this decision may be directed to the undersigned at (571) 272-3214.

John J. Gillon, Jr.
Senior Attorney
Office of Petitions

IFW

NEIFELD IP LAW, P.C.
2001 Jefferson Davis Highway
Suite 1001
Arlington, VA 22202

OIPE JC139
AUG 17 2004
PATENT & TRADEMARK OFFICE

Tel: 703-415-0012
Fax: 703-415-0013
Email: rneifeld@Neifeld.com
Web: www.Neifeld.com

TRANSMITTAL LETTER AND AUTHORIZATION TO CHARGE DEPOSIT ACCOUNT

ASSISTANT COMMISSIONER FOR PATENTS
ALEXANDRIA, VA 22313

RE: Attorney Docket No.: X2YA0047U-US
Application Serial No.: 10/895,062
Filed: 7/21/2004
Title: Filter Assembly
Inventor: Anthony A. ANTHONY

SIR:

Attached hereto for filing are the following papers:

1. Decision on Petition Under 37 CFR 1.183 Seeking Waiver of Requirements Under 37 CFR 1.98 and 1.52 (Filed in Application Serial No: 10/237,079, Neifeld Docket No: X2YA0010U-US; 5 Pages)

Our check in the amount of $0.00 is attached covering the required fees.

The Commissioner is hereby authorized to charge any fees which may be required, or credit any overpayment, to Deposit Account Number 50-2106. A duplicate copy of this sheet is enclosed.

31518
PATENT TRADEMARK OFFICE

8/17/04
Date

Richard A. Neifeld, Ph.D.
Registration No. 35,299
Attorney of Record

Printed: August 16, 2004 (5:19pm)
Y:\Clients\X2YA\X2YA0047\X2YA0047U-US\Drafts\Trans Ltr_040816.wpd

8-13-04 RB

UNITED STATES PATENT AND TRADEMARK OFFICE

Commissioner for Patents
United States Patent and Trademark Office
P.O. Box 1450
Alexandria, VA 22313-1450
www.uspto.gov

OIPE JC139
AUG 17 2004
PATENT & TRADEMARK OFFICE

NEIFELD IP LAW, PC
2001 JEFFERSON DAVIS HIGHWAY
ARLINGTON VA 22202

Attorney Review of Decision: 8-2004

COPY MAILED
AUG 10 2004
OFFICE OF PETITIONS

In re Application of
Anthony, A. et al.
Application No. 10/237,079
Filed: September 9, 2002
For: UNIVERSIAL ENERGY CONDITIONING INTERPOSER WITH CIRCUIT ARCHITECTURE
Attorney Docket No. X2YA0010U/US

DECISION ON PETITION UNDER 37 CFR 1.183 SEEKING WAIVER OF REQUIREMENTS UNDER 37 CFR 1.98 and 1.52

This is a response to a petition under 37 CFR 1.183 filed on April 22, 2004, concurrently with an Information Disclosure Statement (IDS). The § 1.183 petition requests waiver of the rules for Information Disclosure Statements under 37 CFR 1.98. The petition under 37 CFR 1.183, is requesting relief from the § 1.98 provision which requires filing a paper copy of each reference in each of 26 related applications where the references are being cited by Petitioner. The request for waiver is made in view of the need to file multiple applications relating to different aspects of a particular invention. The § 1.183 petition also contains a request seeking permission to submit the same prior art submissions on compact disc which would require a waiver of 37 CFR 1.52(a) and (e).

The petition under 37 CFR 1.183 requesting relief to file a reduced number of paper copies of IDS references and to file them on compact disc is **GRANTED IN PART** to the extent set forth below.

Part I. Background

The instant application filed under 35 U.S.C. 111 is one of about 26 U.S. applications relating to different aspects of an invention.

DecPet_X2YA0010UUS_040813 RB

Petitioner's submission of an Information Disclosure Statement is taken as an attempt to comply with 37 CFR 1.56(b)(1) that requires disclosure to the Office of information material to patentability, which includes information that "establishes, by itself or in combination with other information, a prima facie case of unpatentability of a claim...." Such disclosure can be made by an Information Disclosure Statement (IDS) in the manner prescribed by 37 CFR 1.97 and 1.98.

Part II. Petition Under 37 CFR 1.183 - Special Treatment of Compact Disc

The petition states that the compact disc filed with the IDS is an additional copy of the paper references included with the IDS. It is not apparent from the petition why the Office needs to make available to every examiner in all 26 applications a second copy of each reference on compact disc. Accepting a second copy on compact disc of each reference places an additional burden on the Office. First, there is the burden to determine if the paper copy and the compact disc copy of the references are the same. If the two copies are not the same it raises questions about what the examiner considered in each application. Second, accepting the compact disc copy places a burden on the Office to maintain a copy as part of the Official record of the application. Finally, there is insufficient information in the petition evaluate the data formats and software requirements to determine how compatible the filing is with the Office's automated systems and procedures for maintaining records. Hence it is not clear why relief is required under § 1.183 if relief from filing a paper copy in each application is granted. Nor is it apparent on balance why the Office should accept the additional burden of having to process a second copy of the references on compact disc. In view of the relief granted below, no further discussion of the compact discs is required in this decision.

Petition under § 1.183 for a waiver of the rules for compact discs is Dismissed.

Part III. Petition Under 37 CFR 1.183 - Paper Copies

37 CFR 1.98 requires that any information disclosure statement provide a copy of all patents, publications or other information submitted under 37 CFR 1.97 for consideration by the Office. 37 CFR 1.97 notes that information disclosure statements are considered in regard to the application in which they are filed. See also MPEP 609, pages 600-121 and 600-122.

Paper copies: Petitioner notes that the instant application is one of about 24 bulk filing applications that have been filed in regard to a particular technology. Accordingly, Petitioner requests that one individual paper copy of each citation brought to the attention of the Office in regard to the instant individual application, the "holding" application, not be required to be submitted in each related "bulk filing" application.

Rather than be required to submit, via a paper copy, two cartons of foreign patent and non-patent literature references in each of 24 applications, Petitioner seeks to have:

(1) The concurrently filed single paper copy of each IDS citation fulfill the requirement for a paper copy in all 24 applications;

(2) One application (the instant application) identified as a "holding" application which would contain one complete set of paper copies of references; the paper copies of the references to be submitted in only the "holding" application;

(3) The other related pending U.S. applications, hereafter referred to as the "bulk filing" applications, be exempt from requiring a separately filed paper set of the references; the bulk filing applications will contain other information, e.g., a copy of the decision on petition permitting such procedure, and a copy of the Form 1449 (or equivalent).

Once past the initial IDS submission, the petition does not propose the waiver to apply to updates and no waiver is granted for updates of the IDS.

A review of Office records indicates that 23 applications are either Image File Wrapper (IFW) applications or will soon be IFW applications. The one application that is not an IFW application will become an IFW application upon filing an RCE which appears to be required for consideration of the IDS. The Office has provided an image copy of all of the IDS references from the holding application to the other 23 bulk IFW applications.

Decision: 37 CFR 1.183 provides relief for extraordinary situations, when justice requires suspension of any requirement of the regulations which is not a requirement of the statutes. The instant petition urges that not only would applicant be spared the necessity of submitting duplicative paper copies of foreign patent and non-patent literature references in 24 applications, but also the Office would benefit from not having to handle and store the duplicative sets of copies. While there may be some negative effects from the Office's point of view in terms of making the copies available in different applications from one paper copy, on balance, there is seen to be sufficient benefit to justify waiver in this instance for all the applications filed.

Accordingly, the petition under 37 CFR 1.183 is granted to the extent indicated and under the terms and conditions as are set forth below.

The § 1.98(a)(2) requirement for (the submission of) a copy of each foreign patent and non-patent literature IDS citation in a bulk filing application will be waived in the bulk filing applications provided that the following 7 conditions are complied with:

1) One paper copy of each foreign patent and non-patent literature IDS citation has been submitted to the Office in the concurrently filed IDS in this, the holding application;

2) The information cited in each of the bulk filing applications is or has also been cited in the holding application;

Note: Applicant is not required to cite in each bulk filing application every item of information that is cited in the instant holding application. Items should be cited in each bulk filing application on the basis of relevancy and materiality to the particular claims in the bulk filing application and what each piece of information teaches.

A waiver is not granted (for the requirement to supply a paper copy of an IDS citation in another bulk filing application) where the citation is not, or has not been, made in the instant holding application.

4) A copy of this Decision is filed in each bulk filing application for which waiver is requested;

5) Explanatory information related to a particular citation, such as the concise explanation of a foreign language reference under § 1.98(a)(2), if submitted in the holding application, must also be supplied in each bulk filing application where the citation is made.

6) The Office accepts and specifically reserves the right to terminate the waiver grant in regard to § 1.98(a)(2) without provision of reasons. In such event, a two month period will be given where paper copies would have to be supplied in all applications where new citations are made. Should a termination of the waiver be desired by the Office, the Office will provide written notice to the correspondence address of record. Termination by applicant may be by returning to compliance with § 1.98(a)(2) without formal notice thereof and no transition/continuing period after termination is required.

7) There will be no waiver of any aspects of 37 CFR 1.97 in any application after allowance or final rejection of that application.

Part IV. Further Correspondence

Any correspondence with respect to this matter should be addressed as follows:

By mail: Mail Stop Petition
Commissioner for Patents
P.O. Box 1450
Alexandria, Virginia 22313-1450

By FAX: (703) 872-9306
Attn: Office Patent Legal Administration/Michael L. Lewis

Telephone inquiries should be directed to Michael L. Lewis at (703)306-5585.

Robert J. Spar
Director
Office of Patent Legal Administration
Office of the Deputy Commissioner
for Patent Examination Policy

Attachment: Petitioner's list of Applications

NEIFELD DOCKET NO: X2YA0010U/US

IN THE UNITED STATES PATENT & TRADEMARK OFFICE

IN RE APPLICATIONS OF: Anthony

Examiner: JACKSON, S.

APPLICATION NO: 10/237,079

GAU: 2836

RECEIVED

APR 2 2 2004

OPLA

Filed: 9/9/2002

Title: Universal Energy Conditioning Interposer with Circuit Architecture

and relating to the following 24 applications:

National AppNo	Neif Dock Ref	Status	Title
09/647,648	X2YA0105UPCT-US	Allowed	Component Carrier
10/479,506	X2YA0025UPCT-US	pending	Arrangement for Energy
10/766,000	X2YA0013U-US	pending	Shielded Energy Conditioner
09/996,355	X2YA0125U-US	Pending	Energy pathway arrangement
10/023,467	X2YA0126U-US	Pending	Energy pathway arrangements
10/115,159	X2YA0021U-US	Pending	Offset pathway arrangements
10/189,338	X2YA0022U-US	Pending	Pathway arrangement
10/189,339	X2YA0023U-US	Pending	Arrangement for energy
10/237,079	X2YA0010U/US	Pending	Universal energy conditioning
10/328,942	X2YA0108U-US-C1	Pending	Paired Multi-Layered Dielectric
10/344,749	X2YA0119UPCT-US	Pending	An Electrode Arrangement for
10/399,590	X2YA0015UPCT-US	Pending	Amalgam of shielding and
10/399,630	X2YA0014UPCT-US	Pending	Energy Pathway Arrangements
10/432,840	X2YA0016UPCT-US	Pending	Energy Pathway Arrangements
10/433,482	X2YA0017UPCT-US	Pending	Energy Pathway Arrangements
10/435,199	X2YA0020U-US	Pending	Energy Conditioning Structure
10/443,764	X2YA0026U-US-C1	Pending	Paired Multi-Layered Dielectric
10/443,778	X2YA0029U-US-C2	Pending	Energy Conditioning Circuit
10/443,788	X2YA0028U-US-C2	Pending	Component Carrier
10/443,792	X2YA0027U-US-C1	Pending	Multi-Functional Energy
10/460,361	X2YA0032UUSC1	Pending	Predetermined symmetrically
10/705,962	X2YA0041U-US	Pending	COMPONENT CARRIER
09/632,048	X2YA0117U-US	Allowed	Universal Energy Conditioning
10/369,335	X2YA0100U-US-C4	Allowed	Polymer Fuse & Filter

TO: ASSISTANT COMMISSIONER FOR PATENTS

ALEXANDRIA, VA 22313

37 CFR 1.183 PETITION TO WAIVE PORTION OF THE IDS RULES

FILE A REDUCED SET OF REFERENCES

UNITED STATES PATENT AND TRADEMARK OFFICE

COMMISSIONER FOR PATENTS
UNITED STATES PATENT AND TRADEMARK OFFICE
P.O. BOX 1450
ALEXANDRIA, VA 22313-1450
www.uspto.gov

MAILED

APR 16 2005

DIRECTOR'S OFFICE
TECHNOLOGY CENTER 2600

WELSH & FLAXMAN LLC
2450 CRYSTAL DRIVE
SUITE 112
ARLINGTON VA 22202

In re Application of :
VITITO, CHRISTOPHER J., et al. :
Application No. 10/895,086 : DECISION ON PETITION
Filed: July 21, 2004 : TO MAKE SPECIAL
For: **HOUSING FOR AN AUTOMOBILE ENTERTAINMENT SYSTEM** :

This is a decision on the petition filed November 30, 2004 under Manual of Patent Examination Procedure §708.02, VIII requesting accelerated examination.

The petition under Manual of Patent Examination Procedure §708.02, VIII, must:
(1) be filed prior to receiving any examination by the examiner,
(2) be accompanied by the required fee- $130,
(3) the claims should be directed to a single invention (if it is determined that the claims pertain to more than one invention, then applicant will have to make an election without traverse or forfeit accelerated examination status),
(4) state that a pre-examination search was made, and fully discuss the search method employed, such as classes and subclasses searched, publications, Chemical abstracts, patents, etc. A search made by a foreign patent office satisfies this requirement,
(5) be accompanied by a copy of each of the references most closely related to the subject matter encompassed by the claims if said references are not already of record,
(6) fully discuss the references, pointing out with the particularity required by 37 C.F.R. §1.111 (b) and (c), how the claimed subject matter is patentable over the references.

The petitioner meets all the above-listed requirements. Accordingly, the petition is **GRANTED**.

The application will retain its special status throughout its entire prosecution, including any appeal to the Board of Patent Appeals and Interferences, subject only to diligent prosecution by the applicant. The application file is being forwarded to the examiner for appropriate action in due course.

Kenneth A. Wieder
Special Program Examiner
Technology Center 2600
Communications

19 MAY 2005

UNITED STATES PATENT and TRADEMARK OFFICE

COMMISSIONER FOR PATENTS
UNITED STATES PATENT AND TRADEMARK OFFICE
P.O BOX 1450
ALEXANDRIA, VA 22313-1450
www.uspto.gov

MCDERMOTT WILL &
EMERY LLP
18191 Von Karman Ave., Suite 400
Irvine, CA 92612-7107

In re Application of	:	DECISION ON
Yoshiharu Okiyama ET AL	:	
Application No.: 10/895,091	:	
Filing Date: 21 July 2004	:	PETITION
Attorney's Docket No.: 31824	:	
For: ENHANCED CERAMIC MATERIAL FOR	:	
PRECISION ALIGNMENT MECHANISM	:	UNDER 37 CFR 1.182

This is response to applicants' "PETITION UNDER 37 CFR §1.182 TO CONVERT AN APPLICATION FILED UNDER 35 USC §111(A) TO A NATIONAL STAGE APPLICATION FILED UNDER 35 USC §371 " filed 03 May 2005 requesting to convert the above captioned- application to a national phase application filed under 35 U.S.C. 371. The appropriate fee of $400.00 has been charged to attorney's Deposit Account 502203.

BACKGROUND

On 10 September 2003, applicants filed international application PCT/JP03/11538, which claimed priority of an earlier application filed 12 September 2002. A copy of the intentional application was transmitted on 25 March 2004 to the USPTO from the International Bureau.

Accordingly, the thirty-month period for paying the basic national fee in the United States expired at midnight on 12 March 2005.

On 21 July 2004, applicants filed a transmittal letter for the filing of a utility application, which was accompanied by, inter alia, a check in the amount of $770.00 for the filing fee, a specification, claims, and an executed declaration. The application was processed as filing under 35 U.S.C. §111(a).

On 03 May 2005, applicants filed the instant petition to convert the above application filed under 35 USC §111(a) to a national stage application filed under 35 USC §371.

DISCUSSION

Any intended filing under 35 U.S.C. 371 (a national stage application) must clearly and unambiguously be identified as such, otherwise the submission will be treated as being filed under 35 U.S.C. 111(a). Note 37 CFR 1.495(g) and MPEP 1893.03(a).

Applicants' submission, including the transmittal letter, did not request treatment under 35 U.S.C. 371. In addition, applicants did not pay the full national basic fee, and applicants did not indicate that they wished to pay the basic national filing fee. Instead, applicants paid the filing fee for a filing under 35 U.S.C. 111(a), therefore the application was properly treated under 35 U.S.C. 111 (a) (37 CFR 1.495(g)).

United States statutes and regulations do not make specific provisions for the requested action and as such the Office does not grant such petitions for conversion as a mere matter of course. The Office will **only** grant such petitions upon a showing by applicant of sufficient cause (e.g., the loss of patent rights) where no other remedy is available.

In the present petition applicants have not made a showing that any loss of grant rights would occur if the above-captioned application remains a filing under 35 U.S.C. 111(a). Accordingly, applicants have not established sufficient cause for conversion from a 35 U.S.C. 111(a) application to an application filed under 35 U.S.C. 371.

Applicants, however, are entitled to claim benefit under 35 U.S.C. 120 and 365(c) of the filing date of the international application for the common subject matter, because this application (Serial No. 10/895,091) and the international application (PCT/JP03/11538) designating the United States were copending on 21 July 2004. Accordingly, applicants must comply with 37 CFR 1.78.

Applicants are reminded that in order to perfect the claim for priority under 35 U.S.C. 119, applicant must submit a certified copy of the priority document. The certified copy of priority document submitted to the International Bureau cannot be relied upon to perfect the claim for priority. See MPEP § 1896.

CONCLUSION

The petition for the reasons noted above is **DISMISSED** without prejudice.

If reconsideration of the merits of the petition is desired, applicant must file a request for reconsideration within a **TWO (2) MONTH** non-extendable time period from the mail date of this Decision. Any reconsideration request should include a cover letter entitled "Second Renewed Petition."

Any further correspondence with respect to this matter should be addressed to the Mail Stop PCT, Commissioner for Patents, Office of PCT Legal Administration, P.O. Box 1450, Alexandria, Virginia 22313-1450, with the contents of the letter marked to the attention of the Office of PCT Legal Administration.

Rafael Bacares
Legal Examiner
PCT Legal Office
Telephone: (571) 272-3276
Facsimile: (571) 273-0459

UNITED STATES PATENT AND TRADEMARK OFFICE

COMMISSIONER FOR PATENTS
UNITED STATES PATENT AND TRADEMARK OFFICE
P.O. BOX 1450
ALEXANDRIA, VA 22313-1450
www.uspto.gov

MAILED

FEB - 9 2005

DIRECTOR'S OFFICE
TECHNOLOGY CENTER 2600

WELSH & FLAXMAN LLC
2450 CRYSTAL DRIVE
SUITE 112
ARLINGTON VA 22202

In re Application of :
Christopher J. Vitito :
Application No. 10/895,110 :
Filed: July 21, 2004 :
For: **AUTOMOBILE ENTERTAINMENT SYSTEM LINKING MULTIPLE VIDEO SYSTEMS FOR COORDINATED SHARING OF VIDEO CONTENT** :

DECISION ON PETITION TO MAKE SPECIAL

This is a decision on the petition filed November 30, 2004 under Manual of Patent Examination Procedure §708.02, VIII requesting accelerated examination.

The petition under Manual of Patent Examination Procedure §708.02, VIII, must:
(1) be filed prior to receiving any examination by the examiner,
(2) be accompanied by the required fee- $130,
(3) the claims should be directed to a single invention (if it is determined that the claims pertain to more than one invention, then applicant will have to make an election without traverse or forfeit accelerated examination status),
(4) state that a pre-examination search was made, and fully discuss the search method employed, such as classes and subclasses searched, publications, Chemical abstracts, patents, etc. A search made by a foreign patent office satisfies this requirement,
(5) be accompanied by a copy of each of the references most closely related to the subject matter encompassed by the claims if said references are not already of record,
(6) fully discuss the references, pointing out with the particularity required by 37 C.F.R. §1.111 (b) and (c), how the claimed subject matter is patentable over the references.

The petitioner meets all the above-listed requirements. Accordingly, the petition is **GRANTED**.

The application will retain its special status throughout its entire prosecution, including any appeal to the Board of Patent Appeals and Interferences, subject only to diligent prosecution by the applicant. The application file is being forwarded to the examiner for appropriate action in due course.

Dwayne Bost
Special Program Examiner
Technology Center 2600
Communications

UNITED STATES PATENT AND TRADEMARK OFFICE

COMMISSIONER FOR PATENTS
UNITED STATES PATENT AND TRADEMARK OFFICE
P.O. BOX 1450
ALEXANDRIA, VA 22313-1450
www.uspto.gov

MAILED

FEB - 9 2005

DIRECTOR'S OFFICE
TECHNOLOGY CENTER 2600

WELSH & FLAXMAN LLC
2450 CRYSTAL DRIVE
SUITE 112
ARLINGTON VA 22202

In re Application of :
Christopher J. Vitito :
Application No. 10/895,111 :
Filed: July 21, 2004 :
For: **AUTOMOBILE ENTERTAINMENT SYSTEM** :

DECISION ON PETITION TO MAKE SPECIAL

This is a decision on the petition filed November 30, 2004 under Manual of Patent Examination Procedure §708.02, VIII requesting accelerated examination.

The petition under Manual of Patent Examination Procedure §708.02, VIII, must:
(1) be filed prior to receiving any examination by the examiner,
(2) be accompanied by the required fee- $130,
(3) the claims should be directed to a single invention (if it is determined that the claims pertain to more than one invention, then applicant will have to make an election without traverse or forfeit accelerated examination status),
(4) state that a pre-examination search was made, and fully discuss the search method employed, such as classes and subclasses searched, publications, Chemical abstracts, patents, etc. A search made by a foreign patent office satisfies this requirement,
(5) be accompanied by a copy of each of the references most closely related to the subject matter encompassed by the claims if said references are not already of record,
(6) fully discuss the references, pointing out with the particularity required by 37 C.F.R. §1.111 (b) and (c), how the claimed subject matter is patentable over the references.

The petitioner meets all the above-listed requirements. Accordingly, the petition is **GRANTED**.

The application will retain its special status throughout its entire prosecution, including any appeal to the Board of Patent Appeals and Interferences, subject only to diligent prosecution by the applicant. The application file is being forwarded to the examiner for appropriate action in due course.

Dwayne Bost
Special Program Examiner
Technology Center 2600
Communications

UNITED STATES PATENT AND TRADEMARK OFFICE

Commissioner for Patents
United States Patent and Trademark Office
P.O. Box 1450
Alexandria, VA 22313-1450
www.uspto.gov

SEP 12 2005

BRIAN ROFFE, ESQ
11 SUNRISE PLAZA, SUITE 303
VALLEY STREAM, NY 11580-6170

In re application of David S. Breed et al. Application No. 10/895,121 Filed: July 21, 2004 For: WEIGHT MEASURING SYSTEMS AND METHODS FOR VEHICLES	: : : :	**DECISION ON PETITION TO MAKE SPECIAL (APPLICANT'S AGE)**

This is a decision on the petition submitted on August 01, 2005 under 37 CFR 1.102 (c) to make the above-identified application special under the accelerated examination procedure set forth in MPEP 708.02, Section IV: Applicant's Age.

The petition is **GRANTED**.

An application may be accorded special status upon the filing of a petition providing evidence showing that the applicant is at least 65 years old. Such a showing may be provided by evidence such as a birth certificate or a statement from the applicant.

The evidence submitted with the petition is a passport indicating Mr. Breed is at least 65 years of age.

The examiner is directed (1) to make an interference search for possible interfering applications, (2) to promptly examine this application out of turn, and (3) if any interfering application is discovered, to examine such application simultaneously and state in the first official letter of such application that it is being taken out of turn because of a possible interference.

Petitioner is advised that this application will continue to be special, throughout its entire prosecution and pendency, including interference or appeal, if any, only if petitioners makes a prompt ***bona fide*** effort, in response to each Office action, to place the application in condition for allowance, even if it is necessary to conduct an interview with the examiner to accomplish this purpose.

SUMMARY: Petition to Make Special **GRANTED**.

Kenneth J. Dorner
Special Programs Examiner
Technology Center 3600
(571) 272-6587

KJD/slb: 08/05/05

P. 8

SPE RESPONSE FOR CERTIFICATE OF CORRECTION

Paper No.: _____

DATE : April 05, 2007

TO SPE OF : ART UNIT 1724

10/895136

SUBJECT : Request for Certificate of Correction on Patent No.: 7141093 B2

A response is requested with respect to the accompanying request for a certificate of correction.

Please complete this form and return with file, within 7 days to:

Palm location **7580, Certificates of Correction Branch – South Tower – 9A22**

If response is for an IFW, **return to employee (named below) via PUBSCofC Team in MADRAS.**

With respect to the change(s) requested, correcting Office and/or Applicant's errors, should the patent read as shown in the certificate of correction (COCIN)? No new matter should be introduced, nor should the scope or meaning of the claims be changed.

Elisha Evans

Thank You For Your Assistance

Certificates of Correction Branch

Tel. No. 703-308-9390 EXT 110

The request for issuing the above-identified correction(s) is hereby:

Note your decision on the appropriate box.

- ☐ **Approved** — **All** changes apply.
- ☐ **Approved in Part** — Specify below which changes **do not** apply.
- ☐ **Denied** — State the reasons for denial below.

Comments:

DUANE SMITH
SUPERVISORY PATENT EXAMINER

SPE — 1724 **Art Unit**

UNITED STATES PATENT AND TRADEMARK OFFICE

Commissioner for Patents
United States Patent and Trademark Office
P.O. Box 1450
Alexandria, VA 22313-1450
www.uspto.gov

INTERNATIONAL BUSINESS MACHINES CORPORATION
9000 SOUTH RITA ROAD
TUCSON, AZ 85744

COPY MAILED

NOV 0 8 2007

OFFICE OF PETITIONS

In re Application of
Reed A. Hancock et al.
Application No. 10/895,176
Filed: July 20, 2004
Attorney Docket No. TUC90020008US2

ON PETITION

This is a decision on the petition under 37 CFR 1.137(b), filed October 1, 2007, to revive the above-identified application.

The petition is **GRANTED**.

The above-identified application became abandoned for failure to submit the issue fee in a timely manner in reply to the Notice of Allowance mailed May 24, 2007, which set a statutory period for reply of three (3) months. Accordingly, by operation of law, the above-identified application became abandoned on August 25, 2007.

The petition satisfies the conditions for revival pursuant to the provisions of 37 CFR 1.137(b) in that (1) the reply in the form of payment of the Issue Fee; (2) the petition fee of $1,540; and (3) the required statement of unintentional delay have been received. Accordingly, the Issue Fee payment is accepted as having been unintentionally delayed.

Telephone inquiries concerning this decision should be directed to Carl Friedman at (571) 272-6842.

The application file is being referred to the Office of Patent Publication.

David Bucci
Petitions Examiner
Office of Petitions

UNITED STATES PATENT AND TRADEMARK OFFICE

Commissioner for Patents
United States Patent and Trademark Office
P.O. Box 1450
Alexandria, VA 22313-1450
www.uspto.gov

James L. Young
Westman, Champlin & Kelly, P.A.
Suite 1400
900 Second Avenue South
Minneapolis, MN 55402-3319

COPY MAILED

NOV 15 2006

OFFICE OF PETITIONS

In re Application of	:	
LUDLOW, et al.	:	
Application No. 10/895,177	:	DECISION ON PETITION
Filed: July 20, 2004	:	TO MAKE SPECIAL UNDER
Attorney Docket No. 51035-10110 (B372.12-0040	:	37 CFR 1.102(c)(1)
	:	

This is a decision on the petition under 37 CFR 1.102(c)(1), filed October 06, 2006, to make the above-identified application special based on applicant's age as set forth in M.P.E.P. § 708.02, Section IV.

The petition is **GRANTED**.

A grantable petition to make an application special under 37 CFR 1.102(c)(1) and MPEP § 708.02, Section IV: Applicant's Age, must be accompanied by evidence showing that at least one of the applicants is 65 years of age, or more, such as a birth certificate or a statement by applicant. No fee is required.

The evidence submitted with the instant petition is a declaration signed by Mr. Ludlow indicating that he is at least 65 years of age. Accordingly, the above-identified application has been accorded "special" status.

Telephone inquiries concerning this decision should be directed to Patricia Volpe at 571-272-6825.

All other inquiries concerning either the examination or status of the application should be directed to the Technology Center.

The application is being forwarded to the Technology Center Art Unit 3611 for action on the merits commensurate with this decision.

Patricia Volpe
Petitions Examiner
Office of Petitions

UNITED STATES PATENT AND TRADEMARK OFFICE

Commissioner for Patents
United States Patent and Trademark Office
P.O. Box 1450
Alexandria, VA 22313-1450
www.uspto.gov

GONZALES PATENT SERVICES
4605 CONGRESS AVE. NW
ALBUQUERQUE, NM 87114

COPY MAILED

DEC 3 1 2009

OFFICE OF PETITIONS

In re Application of
Andrew VAN LUCHENE, et *al.*
Application No. 10/895,181
Filed: July 19, 2004
Attorney Docket No. **3208102**

DECISION ON PETITION TO WITHDRAW FROM RECORD

This is a decision on the Request to Withdraw as attorney or agent of record under 37 C.F.R. § 1.36(b), filed October 5, 2009.

The request is **NOT APPROVED**.

The request to withdraw as attorney/agent of record and change of correspondence address is hereby not accepted. Petitioner has not complied with current USPTO requirements, set forth in 37 CFR 10.40 concerning Request for Withdrawal as Attorney and Change of Correspondence Address. Specifically, pursuant to 37 CFR 10.40, the Office will require the practitioner(s) to certify that he, she or they have:

> (1) given reasonable notice to the client, prior to the expiration of the reply period, that the practitioner(s) intends to withdraw from employment;
>
> (2) delivered to the client or duly authorized representative of the client all papers and property (including funds) to which the client is entitled; and
>
> (3) notified the client of any replies that may be due and the time frame within which the client must respond.

Petitioner has not complied with the above certifications. It is suggested that petitioner submit a properly completed PTO/SB/83 (effective date May 12, 2008), which provides a section wherein practitioners may certify the completion of the above-listed activities necessary for the request to withdraw from representation to be granted.

Telephone inquiries concerning this decision should be directed to the undersigned at 571-272- 7253. All other inquires concerning either the examination or status of the application should be directed to the Technology Center.

/Monica A. Graves/
Petitions Examiner, Office of Petitions

SPE RESPONSE FOR CERTIFICATE OF CORRECTION

Paper No.: _____

DATE : 9/3/09

TO SPE OF : ART UNIT 1643

SUBJECT : Request for Certificate of Correction for Appl. No.: 10/895183 Patent No.: 7335748 B2

Please respond to this request for a certificate of correction within 7 days.

FOR IFW FILES:

Please review the requested changes/corrections as shown in the **COCIN** document(s) in the IFW application image. No new matter should be introduced, nor should the scope or meaning of the claims be changed.

Please complete the response (see below) and forward the completed response to scanning using document code **COCX**.

FOR PAPER FILES:

Please review the requested changes/corrections as shown in the attached certificate of correction. Please complete this form (see below) and forward it with the file to:

Certificates of Correction Branch (C of C)
Randolph Square 9D62-B
Palm Location 7580

Virginia Tolbert
Certificates of Correction Branch
703-756-1591

Thank You For Your Assistance

The request for issuing the above-identified correction(s) is hereby:
Note your decision on the appropriate box.

- ☒ **Approved** — **All** changes apply.
- ☐ **Approved in Part** — Specify below which changes **do not** apply.
- ☐ **Denied** — State the reasons for denial below.

Comments: _____

LARRY R. HELMS, PH.D.
SUPERVISORY PATENT EXAMINER

1643

SPE **Art Unit**

UNITED STATES PATENT AND TRADEMARK OFFICE

Commissioner for Patents
United States Patent and Trademark Office
P.O. Box 1450
Alexandria, VA 22313-1450
www.uspto.gov

MICHAEL BEST & FRIEDRICH LLP
401 NORTH MICHIGAN AVE
SUITE 1900
CHICAGO IL 60611

COPY MAILED

APR 01 2005

OFFICE OF PETITIONS

In re Application of Linda Chatman Application No. 10/895,227 Filed: July 20, 2004 Attorney Docket No. 020599-9001-01	: : : : :	DECISION ON PETITION

This is a decision on the paper titled "PETITION TO ACCORD FILING DATE PURSUANT TO 37 C.F.R. §§ 1.53(e) AND 1.182", filed October 14, 2004 (Certificate of Mailing dated October 11, 2004), requesting that the above-identified application be accorded a filing date of July 20, 2004.

The instant application was deposited on July 20, 2004, as a continuation-in-part of prior application no. 10/224,165. However, the instant application omitted a copy of the drawings. Accordingly, on September 23, 2004, the Office of Initial Patent Examination properly mailed a "Notice of Incomplete Nonprovisional Application", requiring drawings and stating that the filing date would be the date of receipt of the drawings.

In response, petitioner filed the present petition on October 14, 2003, together with a copy of the omitted drawings and an amendment seeking their entry into the instant application. Petitioner does not dispute the fact that no drawings were filed in the instant application. Rather, petitioner points out that he incorporated prior application 10/224,165 by reference in the application transmittal form and the first line of the specification.

With respect to the practice of incorporation by reference, the Manual of Patent Examining Procedure states:

> Material needed to accord an application a filing date may not be incorporated by reference. Therefore, if a continuation or divisional application as originally filed incorporates by reference material omitted from the application papers, which is needed to accord the application a filing date, the application will not be entitled to a filing date. **A petition under 37 CFR 1.182 and the required petition fee, including an amendment submitting the necessary omitted material, requesting that the necessary omitted material contained in the prior application and submitted in the amendment, be included in the continuation or divisional application based upon the incorporation by reference statement, is required in order to accord the application a filing date as of the date of deposit of the continuation or divisional application.** An amendment submitting the omitted material and relying upon the incorporation by reference will not be entered in the continuation or divisional application unless a decision granting the petition states that the application is accorded a filing date and that the amendment will be entered.[1]

Incorporation by reference is intended as a safeguard to protect an applicant who in a continuation or divisional application has omitted a "portion" of the application on filing.[2] Here, petitioner omitted drawings in their entirety. As at least one drawings was necessary to accord the instant application a filing date, no filing date was able to be accorded at the time of filing. However, petitioner properly incorporated prior application no. 10/224,165 by reference. In addition, petitioner has submitted the omitted drawings, paid the $130 petition fee, and submitted an amendment seeking entry of the drawings.

In view thereof, the petition is **GRANTED**.

The application is being forwarded to the Office of Initial Patent Examination (OIPE) for further processing with a filing date of July 20, 2004, using the application papers received in the Office on that date and the 3 sheets of drawings supplied on petition filed October 14, 2004. Applicant will receive appropriate notifications regarding the fees owed, if any, and other information in due course from OIPE.

Telephone inquiries specific to this decision should be directed to Petitions Attorney Cliff Congo at (571)272-3207.

Charles Pearson
Director
Office of Petitions

---

[1] MPEP 201.06(c)(emphasis added).

[2] See id.

UNITED STATES PATENT AND TRADEMARK OFFICE

Commissioner for Patents
United States Patent and Trademark Office
P.O. Box 1450
Alexandria, VA 22313-1450
www.uspto.gov

RUSS FOWLER
MAGINOT, MOORE & BECK LLP
CHASE TOWER, SUITE 3250
INDIANAPOLIS, IN 46204-5115

COPY MAILED

JAN 30 2006

OFFICE OF PETITIONS

In re Application of	:
Allan Trochman	:
Application No. 10/895,265	: DECISION GRANTING PETITION
Filed: July 20, 2004	: UNDER 37 CFR 1.137(b)
Attorney Docket No. 6320P0090US	:

This is a decision on the petition under 37 CFR 1.137(b), filed August 22, 2005, to revive the above-identified application.

The petition is **GRANTED**.

The above-identified application became abandoned for failure to reply in a timely manner to the Notice to File Missing Parts of Application (Notice) mailed September 15, 2004, which set a period for reply of two (2) months from the mail date of the Notice. No extensions of time under the provisions of 37 CFR 1.136(a) were obtained. Accordingly, the above-identified application became abandoned on November 16, 2004. A Notice of Abandonment was mailed on June 9, 2005.

The petition satisfies the conditions for revival pursuant to the provisions of 37 CFR 1.137(b) in that (1) the reply (the items required by the Notice of September 15, 2004); (2) the petition fee of $1,500; and (3) the required statement of unintentional delay have been received. Accordingly, the reply to the Notice of September 15, 2004 is accepted as having been unintentionally delayed.

A communication approving the request to withdraw the previous attorneys of record was mailed on January 27, 2006, and, pursuant to said request, the correspondence address was changed to the address noted above. However, an appropriate power of attorney should be submitted in this application.

Telephone inquiries concerning this decision should be directed to the undersigned at (571) 272-3218.

This matter is being referred to the Office of Initial Patent Examination for pre-examination processing.

Frances Hicks
Petitions Examiner
Office of Petitions

C:\documents and settings\fhicks\my documents\470\Jan9\895265 1-27-06

UNITED STATES PATENT AND TRADEMARK OFFICE

COMMISSIONER FOR PATENTS
UNITED STATES PATENT AND TRADEMARK OFFICE
P.O. BOX 1450
ALEXANDRIA, VA 22313-1450
www.uspto.gov

The Law Offices of Robert B. Polit, LLC
Suite 200
8804 Lake Ridge Drive
Darien, IL 60561

COPY MAILED

JAN 30 2006

OFFICE OF PETITIONS

In re Application of	:	
Allan Trochman	:	
Application No. 10/895,265	:	DECISION ON PETITION
Filed: July 20, 2004	:	TO WITHDRAW
Attorney Docket No. 12858-5	:	FROM RECORD
	:	

This is a decision on the Request to Withdraw as attorney or agent of record under 37 C.F.R. § 1.36(b), filed December 19, 2005.

The request is **APPROVED**.

A grantable request to withdraw as attorney/agent of record must be signed by every attorney/agent seeking to withdraw or contain a clear indication that one attorney is signing on behalf of another/others. A request to withdraw will not be approved unless at least 30 (thirty) days would remain between the date of approval and the later of the expiration date of a time to file a response or the expiration date of the maximum time period which can be extended under 37 C.F.R. § 1.136(a).

The request was signed by Robert B. Polit on behalf of all attorneys of record who are associated with customer No. 00757.

All attorneys/agents associated with the Customer Number 00757 have been withdrawn.

The correspondence address of record has been changed and the new correspondence address is the address indicated below. A courtesy copy of this communication is also being mailed to the assignee of record.

This application became abandoned for failure to reply to the Notice to File Missing Parts of Nonprovisional Application, mailed September 15, 2004. A petition to revive was filed on August 22, 2005. A decision on the petition is being mailed under separate cover.

Telephone inquiries concerning this decision should be directed to Frances Hicks at 571-272-3218.

Amelia Au
Petitions Examiner
Office of Petitions

cc:

Russ Fowler
Maginot, Moore & Beck LLP
Chase Tower
111 Monument Circle, Suite 3250
Indianapolis, IN 46204-5115

Beckman Coulter, Inc.
4300 North Harbor Boulevard
Fullerton, CA 92834

UNITED STATES PATENT AND TRADEMARK OFFICE

COMMISSIONER FOR PATENTS
UNITED STATES PATENT AND TRADEMARK OFFICE
P.O. BOX 1450
ALEXANDRIA, VA 22313-1450
www.uspto.gov

FISH & RICHARDSON P.C.
SMITH & NEPHEW, INC.
1450 BROOKS ROAD
MEMPHIS, TN 38116

COPY MAILED

JAN 19 2007

OFFICE OF PETITIONS

In re Application of	:	
PERRIELLO et al	:	
Application No.: 10/895,266	:	DECISION ON PETITION
Filing Date: July 20, 2004	:	UNDER 37 CFR 1.78(a)
Attorney Docket No.: 00167-505001	:	

This is a decision on the petition under 37 CFR 1.78(a), filed November 22, 2004, to accept a claim under 35 U.S.C. 120 for the benefit of priority to a prior-filed nonprovisional application.

The petition is **DISMISSED AS MOOT**.

A petition for acceptance of a late claim for priority under 37 CFR 1.78(a)(3) is only applicable to those applications filed on or after November 29, 2000. Further, the petition is appropriate only after the expiration of the period specified in 37 CFR 1.78(a)(2)(ii).

The present nonprovisional application was filed after November 29, 2000. However, the claim herein for the benefit of priority to the prior-filed nonprovisional application was submitted prior to the expiration of the period specified in 37 CFR 1.78(a)(2)(ii). Therefore, this is not a proper petition under 37 CFR 1.78(a).

Applicant is advised that the priority claim made in the petition filed November 22, 2004 does not satisfy the requirements of 37 CFR 1.78(a)(2)(iii). A petition under 37 CFR 1.78(a)(3) would be necessary to correct the deficiency.

Any inquiries concerning this decision may be directed to Bryan Lin at (571)272-3303. All other inquiries concerning either the examination procedures or status of the application should be directed to the Technology Center.

This matter is being referred to Technology Center Art Unit 3734 for continued examination.

Bryan Lin

Bryan Lin
Legal Examiner
Office of PCT Legal Administration

Boris Milef
Legal Examiner
Office of Petitions

2 3 MAR 2007

UNITED STATES PATENT AND TRADEMARK OFFICE

COMMISSIONER FOR PATENTS
UNITED STATES PATENT AND TRADEMARK OFFICE
P.O. BOX 1450
ALEXANDRIA, VA 22313-1450
www.uspto.gov

FISH & RICHARDSON P.C.
SMITH & NEPHEW, INC.
1450 BROOKS ROAD
MEMPHIS, TN 38116

In re Application of	:	
PERRIELLO et al	:	
Application No.: 10/895,266	:	DECISION ON PETITION
Filing Date: July 20, 2004	:	UNDER 37 CFR 1.78(a)
Attorney Docket No.: 00167-505001	:	

This is a decision on the petition under 37 CFR 1.78(a)(3), filed January 24, 2007, to accept a claim under 35 U.S.C. 120 for the benefit of priority to a prior-filed nonprovisional application.

The petition is **GRANTED**.

The present nonprovisional application was filed after November 29, 2000, and the claim herein for the benefit of priority to the prior-filed nonprovisional application is submitted after expiration of the period specified in 37 CFR 1.78(a)(2)(ii). Therefore, this is a proper petition under 37 CFR 1.78(a)(3).

A petition for acceptance of a late claim for priority under 37 CFR 1.78(a)(3) is only applicable to those applications filed on or after November 29, 2000. Further, the petition is appropriate only after the expiration of the period specified in 37 CFR 1.78(a)(2)(ii). In addition, the petition under 37 CFR 1.78(a)(3) must be accompanied by:

(1) the reference required by 35 U.S.C. 120 and 37 CFR 1.78(a)(2)(i) of the prior-filed application, unless previously submitted;
(2) the surcharge set forth in 37 CFR 1.17(t); and
(3) a statement that the entire delay between the date the claim was due under 37 CFR 1.78(a)(2)(ii) and the date the claim was filed was unintentional. The Director may require additional information where there is a question whether the delay was unintentional.

The petition complies with the requirements for a grantable petition under 37 CFR 1.78(a)(3) in that (1) a reference to the prior-filed nonprovisional application has been included in an amendment to the first sentence of the specification following the title, as provided by 37 CFR 1.78(a)(2)(iii); (2) the surcharge fee required by 37 CFR 1.17(t) has been submitted; and (3) the petition contains a proper statement of unintentional delay. Accordingly, having found that the

instant petition for acceptance of an unintentionally delayed claim for the benefit of priority under 35 U.S.C. 120 to the prior-filed nonprovisional application satisfies the conditions of 37 CFR 1.78(a)(3), the petition is granted.

The granting of the petition to accept the delayed benefit claim to the prior-filed application under 37 CFR 1.78(a)(3) should not be construed as meaning that this application is entitled to the benefit of the prior-filed application. In order for this application to be entitled to the benefit of the prior-filed application, all other requirements under 35 U.S.C. 120 and 37 CFR 1.78(a)(1) and (a)(2) must be met. Similarly, the fact that the corrected Filing Receipt accompanying this decision on petition includes the prior-filed application should not be construed as meaning that applicant is entitled to the claim for benefit of priority to the prior-filed application noted thereon. Accordingly, the examiner will, in due course, consider this benefit claim and determine whether this application is entitled to the benefit of the earlier filing date.

A corrected Filing Receipt, which includes the priority claim to the prior-filed nonprovisional application, accompanies this decision on petition.

Any inquiries concerning this decision may be directed to Bryan Lin at (571)272-3303. All other inquiries concerning either the examination procedures or status of the application should be directed to the Technology Center.

This matter is being referred to Technology Center Art Unit 3734 for appropriate action on the amendment filed January 24, 2007, including consideration by the examiner of applicant's entitlement to claim benefit of priority under 35 U.S.C. 120 to the prior-filed nonprovisional application.

Bryan Lin

Bryan Lin
Legal Examiner
Office of PCT Legal Administration

Boris Milef
Legal Examiner
Office of Petitions

ATTACHMENT: Corrected Filing Receipt

UNITED STATES PATENT AND TRADEMARK OFFICE

Commissioner for Patents
United States Patent and Trademark Office
P.O. Box 1450
Alexandria, VA 22313-1450
www.uspto.gov

MAILED FROM
DIRECTORS OFFICE
APR 1 1 2007
TECHNOLOGY CENTER 2800

DUANE MORRIS LLP
Suite 700
1667 K Street, N.W.
Washington DC 20006

In re Application of:
C.V. Varanasi et al.
Serial No.: 10/895,288
Filed: July 21, 2004
Attorney Docket No.: ADV08 1000

DECISION ON REQUEST
TO REMAIL OFFICE ACTION

This is a decision on the "REQUEST TO REMAIL OFFICE ACTION AND RESTART THE PERIOD FOR REPLY" filed on October 17, 2006.

The request is **GRANTED**.

A final Office action was mailed on April 19, 2006. The request indicates that applicant did not receive this Office action. It further indicates that applicant did not know about the Office action until applicant's electronic docketing system generated a status check of the subject application on October 15, 2006 upon which applicant accessed the Patent Office Public PAIR and learned that the Office action had been mailed in the subject application on April 19, 2006. The request also states that applicant contacted the examiner on October 16, 2006 who confirmed the mailing of the Office action on April 19, 2006.

The request provides the required showing under MPEP § 711.03(c)(II) to establish nonreceipt of an Office action. Besides the statement from the practitioner stating that the Office action of April 19, 2006 was not received, the request provides a copy of the docket records where the nonreceived Office action would have been entered had the Office action been received. The evidence is sufficient to establish that the Office action of April 19, 2006 was not received.

Accordingly, the Office action of April 19, 2006 will be remailed and a new shortened statutory period for response to this Office action will be set to expire three months from the date of remailing.

Any inquiries regarding this decision should be directed to Edward Westin at (571) 272-1638.

Janice A. Falcone

Janice A. Falcone, Director
Technology Center 2800
Semiconductors, Electrical and Optical
Systems and Components

UNITED STATES PATENT AND TRADEMARK OFFICE

Commissioner for Patents
United States Patent and Trademark Office
P.O. Box 1450
Alexandria, VA 22313-1450
www.uspto.gov

Paper No.

COPY MAILED

NOV 17 2008

OFFICE OF PETITIONS

LEONG C LEI
PMB # 1008
1867 YGNACIO VALLEY ROAD
WALNUT CREEK CA 94598

In re Application of	:	
Chig-Chieh Lin	:	
Application No. 10/895,321	:	DECISION ON PETITION
Filed: July 21, 2004	:	PURSUANT TO
Attorney Docket Number:	:	37 C.F.R. § 1.137(B)
FP10098	:	
Title: COMPUTER LCD MONITOR	:	

This is a decision on the petition pursuant to 37 C.F.R. § 1.137(b), filed July 7, 2008, to revive the above-identified application.

This petition pursuant to 37 C.F.R. § 1.137(b) is **GRANTED**.

The above-identified application became abandoned for failure to reply in a timely manner to the non-final Office action, mailed December 18, 2006, which set a shortened statutory period for reply of three months. No response was received, and no extensions of time under the provisions of 37 C.F.R. § 1.136(a) were requested. Accordingly, the above-identified application became abandoned on March 19, 2007. A notice of abandonment was mailed on August 8, 2007.

A grantable petition pursuant to 37 C.F.R. § 1.137(b) must be accompanied by:

(1) The reply required to the outstanding Office action or notice, unless previously filed;
(2) The petition fee as set forth in 37 C.F.R.

§ 1.17(m);

(3) A statement that the entire delay in filing the required reply from the due date for the reply until the filing of a grantable petition pursuant to this paragraph was unintentional. The Commissioner may require additional information where there is a question whether the delay was unintentional, and;

(4) Any terminal disclaimer (and fee as set forth in 37 C.F.R. § 1.20(d)) required pursuant to paragraph (d) of this section.

With this petition, Petitioner has submitted the petition fee, an amendment, and the proper statement of unintentional delay. A terminal disclaimer is not required. As such, the first three requirements of Rule 1.137(b) have been met. The fourth requirement is not applicable.

The Technology Center will be notified of this decision. The Technology Center's support staff will notify the Examiner of this decision, so that the amendment that was received on July 7, 2008 can be processed.

Petitioner may find it beneficial to view Private PAIR within a fortnight of the present decision to ensure that the revival has been acknowledged by the Technology Center in response to this decision. It is noted that all inquiries with regard to any failure of that change in status should be directed to the Technology Center where that change of status must be effected - **the Office of Petitions cannot effectuate a change of status.**

Telephone inquiries regarding *this decision* should be directed to the undersigned at (571) 272-3225[1]. All other inquiries concerning examination procedures or status of the application should be directed to the Technology Center.

/Paul Shanoski/
Paul Shanoski
Senior Attorney
Office of Petitions

---

1 Petitioner will note that all practice before the Office should be in writing, and the action of the Office will be based exclusively on the written record in the Office. See 37 C.F.R. § 1.2. As such, Petitioner is reminded that no telephone discussion may be controlling or considered authority for Petitioner's further action(s).

UNITED STATES PATENT AND TRADEMARK OFFICE

COMMISSIONER FOR PATENTS
UNITED STATES PATENT AND TRADEMARK OFFICE
P.O. BOX 1450
ALEXANDRIA, VA 22313-1450
www.uspto.gov

WHITHAM, CURTIS & CHRISTOFFERSON & COOK, P.C.
11491 SUNSET HILLS ROAD
SUITE 340
RESTON, VA 20190

COPY MAILED
JAN 11 2007
OFFICE OF PETITIONS

In re Application of Tetsuya Saito Application No. 10/895,327 Filed: July 31, 2004 Attorney Docket No. 01600082AA	: : : : :	ON PETITION

This is a decision on the petition under 37 CFR 1.137(b) to revive the above-identified application, filed September 5, 2006.

The petition is **GRANTED**.

The application became abandoned for failure to pay the issue fee on or before August 30, 2006. This decision precedes the mailing of a Notice of Abandonment. On September 5, 2006, the present petition was filed.

The petition satisfies the requirements of 37 CFR 1.137(b) in that petitioner has supplied (1) the reply in the form of the requisite issue/publication fee; (2) the petition fee of $1,500; and (3) an adequate statement of unintentional delay.

The application is being referred to the Office of Publications to be processed into a patent.

Telephone inquires related to this decision should be directed to the undersigned at (571) 272-3204. Telephone inquiries related to processing at Publishing Division should be directed to (571) 272-4200.

Sherry D. Brinkley
Petitions Examiner
Office of Petitions

UNITED STATES PATENT AND TRADEMARK OFFICE

Commissioner for Patents
United States Patent and Trademark Office
P.O. Box 1450
Alexandria, VA 22313-1450
www.uspto.gov

COPY MAILED

JUN 1 0 2009

OFFICE OF PETITIONS

NOVAK, DRUCE + QUIGG L.L.P. - PERGO
1300 EYE STREET, N.W.
1000 WEST TOWER
WASHINGTON, DC 20005

In re Application of
Sven Kornfalt, et al.
Application No. 10/895,329
Filed: July 21, 2004
Attorney Docket No. 8688.002.USDV02

ON PETITION

This is a decision in response to the petition, filed April 23, 2009, to revive the above-identified application under the provisions of 37 CFR 1.137(b).

The petition is **GRANTED**.

The application became abandoned for failure to reply in a timely manner to the non-final Office action mailed October 8, 2008, which set a shortened statutory period for reply of three (3) months. No extension of time under the provisions of 37 CFR 1.136(a) was obtained. Accordingly, the application became abandoned on January 9, 2009. This decision precedes the mailing of a Notice of Abandonment. However, on April 23, 2009, the present petition was filed.

The petition satisfies the requirements of 37 CFR 1.137(b) in that petitioner has supplied (1) the reply in the form of an amendment; (2) the petition fee of $1,620; and (3) an adequate statement of unintentional delay.

This application is being referred to Technology Center AU 1791 for appropriate action by the Examiner in the normal course of business on the reply received April 23, 2009.

Telephone inquiries concerning this decision should be directed to the undersigned at (571) 272-3204. Inquiries relating to further prosecution should be directed to the Technology Center.

Sherry D. Brinkley
Petitions Examiner
Office of Petitions

UNITED STATES PATENT AND TRADEMARK OFFICE

Commissioner for Patents
United States Patent and Trademark Office
P.O. Box 1450
Alexandria, VA 22313-1450
www.uspto.gov

JOHN E. HARRITY
11240 WAPLES MILL ROAD
SUITE 300
FAIRFAX, VA 22030

MAILED

MAY 1 2 2005

Technology Center 2100

In re Application of: HARRITY, Eric
Application No. 10/895,330
Filed: July 21, 2004
For: SYSTEMS AND METHODS FOR CHANGING SYMBOL SEQUENCES IN DOCUMENTS

DECISION ON PETITION TO MAKE SPECIAL (ACCELERATED EXAMINATION) UNDER M.P.E.P. §708.02 (VIII)

This is a response to the petition filed August 2, 2004, under 37 C.F.R. §1.102(d) and M.P.E.P. §708.02 (VIII): Accelerated Examination, to make the above-identified application special.

The Petition is **DISMISSED**.

M.P.E.P. §708.02, Section VIII, which sets out the prerequisites for a grantable petition for Accelerated Examination under 37 C.F.R. §1.102(d) states in relevant part:

A new application (one which has not received any examination by the examiner) may be granted special status provided that applicant (and this term includes applicant's attorney or agent) complies with each of the following items:

(a) Submits a petition to make special accompanied by the fee set forth in **37 CFR 1.17(h)**;

(b) Presents all claims directed to a single invention, or if the Office determines that all the claims presented are not obviously directed to a single invention, will make an election without traverse as a prerequisite to the grant of special status;

(c) Submits a statement(s) that a pre-examination search was made, listing the field of search by class and subclass, publication, Chemical Abstracts, foreign patents, etc. The pre-examination search must be directed to the invention as claimed in the application for which special status is requested. A search made by a foreign patent office satisfies this requirement;

(d) Submits one copy each of the references deemed most closely related to the subject matter encompassed by the claims if said references are not already of record; and

(e) Submits a detailed discussion of the references, which discussion points out, with the particularity required by 37 CFR 1.111 (b) and (c), how the claimed subject matter is patentable over the references.

The Petition filed August 2, 2004 fails to adequately meet requirements (b) and (e) of the criteria set forth above. With respect to requirement (b), a statement indicating that all claims are directed to **a single invention** has not been made. Per requirement (e), a complete detailed discussion of the (aforementioned most closely related) references has not been provided with the necessary specificity required under 37 CFR 1.111 (b) and (c). Specifically, Petitioner should point out the **specific distinctions** believed to render the claims patentable over the references, as well as must clearly point out the patentable novelty which he or she thinks the claims present in view of the state of the art disclosed by the references cited. It appears that Petitioner merely recites all limitations of each of the independent claims, and indicates that the cited references do not disclose or suggest the recited features. Such a comprehensive and indiscriminate recitation of the claims does not meet the requirements of pointing out "specific distinctions" and "patentable novelty" of the claims in view of the references.

Accordingly, the Petition to Make Special is **DISMISSED**.

Petitioner is given one opportunity to perfect the petition. Any request for reconsideration must be filed within TWO MONTHS of the mail date of this decision. Extensions of time under 37 CFR 1.136(a) are permitted by a declaration or statement providing the information as outlined above.

Until the renewed petition is submitted, the application will be returned to the examiner's docket to await treatment on the merits in the normal order of examination.

Brian L. Johnson
Special Program Examiner
Technology Center 2100
Computer Architecture, Software and Information Security
571-272-3595

5/2/05

SDL: 04/28/05

UNITED STATES PATENT AND TRADEMARK OFFICE

Commissioner for Patents
United States Patent and Trademark Office
P.O. Box 1450
Alexandria, VA 22313-1450
www.uspto.gov

LAW OFFICE OF MARC D. MACHTINGER, LTD.
750 W. LAKE COOK ROAD
SUITE 350
BUFFALO GROVE IL 60089

COPY MAILED

JUL 17 2007

OFFICE OF PETITIONS

ON PETITION

In re Application of	:	
Wade Ralph Bozak et al	:	
Application No. 10/895,364	:	
Filed: July 21, 2004	:	
Attorney Docket No. 266 P020	:	

This is a decision on the petition, filed July 13, 2007, under 37 CFR 1.313(c)(2) to withdraw the above-identified application from issue after payment of the issue fee.

The petition is **GRANTED.**

The above-identified application is withdrawn from issue for consideration of a submission under 37 CFR 1.114 (request for continued examination). See 37 CFR 1.313(c)(2).

Petitioner is advised that the issue fee paid on May 1, 2007 in the above-identified application cannot be refunded. If, however, the above-identified application is again allowed, petitioner may request that it be applied towards the issue fee required by the new Notice of Allowance.[1]

Telephone inquiries should be directed to the undersigned at (571) 272-3208.

The examiner of Technology Center AU 1724 will consider the request for continued examination under 37 CFR 1.114.

Karen Creasy

Karen Creasy
Petitions Examiner
Office of Petitions

---

[1] The request to apply the issue fee to the new Notice may be satisfied by completing and returning the new Issue Fee Transmittal Form PTOL-85(b), which includes the following language thereon: "Commissioner for Patents is requested to apply the Issue Fee and Publication Fee (if any) or re-apply any previously paid issue fee to the application identified above." Petitioner is advised that, whether a fee is indicated as being due or not, the Issue Fee Transmittal Form **must** be completed and timely submitted to avoid abandonment. Note the language in bold text on the first page of the Notice of Allowance and Fee(s) Due (PTOL-85).

UNITED STATES PATENT AND TRADEMARK OFFICE

Commissioner for Patents
United States Patent and Trademark Office
P.O. Box 1450
Alexandria, VA 22313-1450
www.uspto.gov

LAW OFFICE OF MARC D. MACHTINGER, LTD.
750 W. LAKE COOK ROAD, SUITE 350
BUFFALO GROVE, IL 60089

COPY MAILED

JUL 24 2007

OFFICE OF PETITIONS

In re Application of	:	
Wade Ralph Bozak et al	:	
Application No. 10/895,364	:	NOTICE
Filed: July 21, 2004	:	
Attorney Docket No. 266 P020	:	

This is a notice regarding your requests, filed October 21, 2005 and May 29, 2007, for acceptance of a fee deficiency submission under 37 CFR 1.28.[1]

Your fee deficiency submission on October 21, 2005 for the filing fee under 37 CFR 1.28 is hereby **ACCEPTED**.

In view of the notification of loss of entity status on October 21, 2005, all fees paid after that date were subject to payment at the large entity rate. Therefore, payment of the issue fee in the small entity amount of $700 on May 1, 2007 was insufficient. It is noted that the Notice of Allowance and Fee(s) Due mailed on April 18, 2007, required payment of the issue fee on or before July 18, 2007. As the $700 balance due for the issue fee was received prior to the expiration of the due date for payment of the fee, this payment tolled the period for payment at the large entity rate due on or before July 18, 2007.

This file is no longer entitled to small entity status. Accordingly, all future fees paid in this file must be paid at the large entity rate, absent further notification from a proper party of a change in status. *See* 37 CFR 1.27(c)(2).

Inquiries related to this communication should be directed to the undersigned at (571) 272-3218.

Frances Hicks
Petitions Examiner
Office of Petitions

---

[1] The Office no longer investigates or rejects original or reissue applications under 37 CFR 1.56. **1098 Off. Gaz. Pat. Office 502 (January 3, 1989)**. Therefore, nothing in this Notice is intended to imply that an investigation was done.

UNITED STATES PATENT AND TRADEMARK OFFICE

Commissioner for Patents
United States Patent and Trademark Office
P.O. Box 1450
Alexandria, VA 22313-1450
www.uspto.gov

LAW OFFICE OF MARC D. MACHTINGER
750 W. LAKE COOK ROAD
SUITE 350
BUFFALO GROVE IL 60089

COPY MAILED

NOV 01 2007

OFFICE OF PETITIONS

In re Application of	:	
Wade Ralph Bozek et al	:	
Application No. 10/895,364	:	DECISION DISMISSING PETITION
Filed: July 21, 2004	:	UNDER 37 CFR 1.313(a)
Attorney Docket No. 266 P020	:	

This is a decision on the petition filed October 30, 2007, which is being treated as a petition under 37 CFR 1.313(a), requesting withdrawal of the above-identified application from issue.

The petition is **dismissed** as moot for the reasons stated below.

A review of the file record discloses that a Notice of Allowance and Fee(s) Due was mailed on August 29, 2007, with the issue fee being due on or before November 29, 2007. The issue fee in this case has not been paid.

The filing of a petition under 37 CFR 1.313(a) is unnecessary, since the mere filing of an RCE and submission will effectively withdraw an application from issue prior to payment of the issue fee. In view thereof, the petition to withdraw from issue is dismissed as involving a moot issue. *Note* MPEP §§ 706.07(h)(IX) and 1308.

Inquiries concerning this decision may be directed to the undersigned at (571) 272-3208.

The matter is being referred to Technology Center AU 1724 for appropriate processing of the RCE filed October 30, 2007, and for consideration of the concurrently filed IDS.

Karen Creasy

Karen Creasy
Petitions Examiner
Office of Petitions

UNITED STATES PATENT AND TRADEMARK OFFICE

Commissioner for Patents
United States Patent and Trademark Office
P.O. Box 1450
Alexandria, VA 22313-1450
www.uspto.gov

LICHTI & PARTNER GBR
PATENTANWALTE
BERGWALDSTR.1
KARLSRUHE D-762-27 DE
GERMANY

COPY MAILED

JUL 22 2008

In re Application of	:	
Gunther KRIEG	:	
Application No. 10/895,388	:	DECISION ON PETITION
Filed: July 21, 2004	:	TO WITHDRAW
Attorney Docket No. 20902.9	:	FROM RECORD
	:	

This is a decision on the Request to Withdraw as attorney or agent of record under 37 C.F.R. § 1.36(b), filed July 2, 2008.

The request is **APPROVED**.

A grantable request to withdraw as attorney/agent of record must be signed by every attorney/agent seeking to withdraw or contain a clear indication that one attorney is signing on behalf of another/others. A request to withdraw will not be approved unless at least 30 (thirty) days would remain between the date of approval and the later of the expiration date of a time to file a response or the expiration date of the maximum time period which can be extended under 37 C.F.R. § 1.136(a).

The request was signed by Paul J. Vincent on behalf of all practitioners of record.

All practitioners of record have been withdrawn.

Applicant is reminded that there is no attorney of record at this time.

The correspondence of record has been changed and the new correspondence address is the address indicated below until otherwise properly notified by the applicant.

In order to request or take action in a patent matter, the assignee must establish its ownership of the patent to the satisfaction of the Director. In this regard, a Statement under 37 CFR 3.73(b) must have either: (i) documentary evidence of a chain of title from the original owner to the assignee (*e.g.*, copy of an executed assignment), and a statement affirming that the documentary evidence of

the chain of title from the original owner to the assignee was or concurrently is being submitted for recordation pursuant to § 3.11; or (ii) a statement specifying where documentary evidence of a chain of title from the original owner to the assignee is recorded in the assignment records of the Office (*e.g.*, reel and frame number).

Telephone inquiries concerning this decision should be directed to the undersigned at 571-272-6735.

Diane Goodwyn
Petitions Examiner
Office of Petitions

cc: PROF. DR. GUNTHER KRIEG
IM RENNICH 12
76227 KARLSRUHE
GERMANY

UNITED STATES PATENT AND TRADEMARK OFFICE

UNITED STATES DEPARTMENT OF COMMERCE
United States Patent and Trademark Office
Address: COMMISSIONER FOR PATENTS
P.O. Box 1450
Alexandria, Virginia 22313-1450
www.uspto.gov

APPLICATION NUMBER	FILING OR 371(c) DATE	FIRST NAMED APPLICANT	ATTY. DOCKET NO.
60/469,606	05/09/2003	Joseph W. Amshey	NVX-019PD

CONFIRMATION NO.

OC000000013322825

1473
FISH & NEAVE
1251 AVENUE OF THE AMERICAS
50TH FLOOR
NEW YORK, NY 10020-1105

Date Mailed: 07/23/2004

DECISION GRANTING REQUEST TO CONVERT TO NON-PROVISIONAL

This is a decision on the request under 37 CFR 1.53(c)(3) received in the U.S. Patent and Trademark Office on **05/10/2004,** to convert the above-identified application to a non-provisional application under 35 U.S.C. 111(a) and 37 CFR 1.53(b).

The request is granted.

The application will be processed in the Office of Initial Patent Examination (OIPE) as a non-provisional application under 35 U.S.C. 111(a) and 37 CFR 1.53(b), including the assignment of a new non-provisional application number.

The non-provisional application number is **10/895,427.** The filing receipt for the non-provisional application number will be mailed to the applicant by OIPE in due course.

JANICE L TIPPETT
Office of Initial Patent Examination
(703) 308-0910

PART 2 - OFFICE COPY

UNITED STATES PATENT AND TRADEMARK OFFICE

UNITED STATES DEPARTMENT OF COMMERCE
United States Patent and Trademark Office
Address: COMMISSIONER FOR PATENTS
P.O. Box 1450
Alexandria, Virginia 22313-1450
www.uspto.gov

APPLICATION NUMBER	FILING OR 371(c) DATE	FIRST NAMED APPLICANT	ATTY. DOCKET NO.
60/484,610	07/01/2003	Michael L. Beigel	PREDYN-43969

CONFIRMATION NO.

OC000000013572529

26252
KELLY BAUERSFELD LOWRY & KELLEY, LLP
6320 CANOGA AVENUE
SUITE 1650
WOODLAND HILLS, CA 91367

Date Mailed: 08/18/2004

DECISION GRANTING REQUEST TO CONVERT TO NON-PROVISIONAL

This is a decision on the request under 37 CFR 1.53(c)(3) received in the U.S. Patent and Trademark Office on **01/08/2004,** to convert the above-identified application to a non-provisional application under 35 U.S.C. 111(a) and 37 CFR 1.53(b).

The request is granted.

The application will be processed in the Office of Initial Patent Examination (OIPE) as a non-provisional application under 35 U.S.C. 111(a) and 37 CFR 1.53(b), including the assignment of a new non-provisional application number.

The non-provisional application number is **10/895,428.** The filing receipt for the non-provisional application number will be mailed to the applicant by OIPE in due course.

JANICE L TIRPETT
Office of Initial Patent Examination
(703) 308-0910

PART 2 - OFFICE COPY

Copied from 60484610 on 11/22/2004

UNITED STATES PATENT AND TRADEMARK OFFICE

Commissioner for Patents
United States Patent and Trademark Office
P.O. Box 1450
Alexandria, VA 22313-1450
www.uspto.gov

KELLY LOWRY & KELLEY, LLP
6320 CANOGA AVENUE
SUITE 1650
WOODLAND HILLS, CA 91367

COPY MAILED

JUN 0 3 2009

OFFICE OF PETITIONS

In re Patent No. 6,933,774	:	
Issue Date: August 23, 2005	:	
Application No. 10/895,428	:	NOTICE
Filed: July 1, 2003	:	
Attorney Docket No.: PREDYN-43969	:	

The above-identified patent has been referred to the Office of Petitions for consideration of a communication filed March 13, 2009 by Dennemeyer & Co Stockport. The communication is being treated as a request under 37 CFR 1.128(c), as it includes authorization to charge a maintenance fee deficiency and a letter signed by an official of the assignee of record indicating that applicants are no longer entitled to claim status as a small entity.

On September 1, 1998, the Court of Appeals for the Federal Circuit held that 37 CFR 1.28(c) is the sole provision governing the time for correction of the erroneous payment of the issue fee as a small entity. **See DH Technology v. Synergystex International, Inc. 154 F.3d 1333, 47 USPQ2d 1865 (Fed. Cir. Sept. 1, 1998).**

The Office no longer investigates or rejects original or reissue applications under 37 CFR 1.56. **1098 Off. Gaz. Pat. Office 502 (January 3, 1989)**. Therefore, nothing in this Notice is intended to imply that an investigation was done.

Your fee deficiency submission under 37 CFR 1.28 is hereby **ACCEPTED**.

This application no longer qualifies for small entity status. Accordingly, all future fees must be paid at the large entity rate.

Inquiries related to this communication should be directed to the Office of Petitions Staff at (571) 272-3282.

Sherry D. Brinkley
Petitions Examiner
Office of Petitions

UNITED STATES PATENT AND TRADEMARK OFFICE

UNITED STATES DEPARTMENT OF COMMERCE
United States Patent and Trademark Office
Address: COMMISSIONER FOR PATENTS
P.O. Box 1450
Alexandria, Virginia 22313-1450
www.uspto.gov

APPLICATION NUMBER	FILING OR 371(c) DATE	FIRST NAMED APPLICANT	ATTY. DOCKET NO.
60/484,608	07/01/2003	Michael L. Beigel	PREDYN-43967

CONFIRMATION NO.

OC000000013572897

26252
KELLY BAUERSFELD LOWRY & KELLEY, LLP
6320 CANOGA AVENUE
SUITE 1650
WOODLAND HILLS, CA 91367

Date Mailed: 08/18/2004

DECISION GRANTING REQUEST TO CONVERT TO NON-PROVISIONAL

This is a decision on the request under 37 CFR 1.53(c)(3) received in the U.S. Patent and Trademark Office on **01/08/2004,** to convert the above-identified application to a non-provisional application under 35 U.S.C. 111(a) and 37 CFR 1.53(b).

The request is granted.

The application will be processed in the Office of Initial Patent Examination (OIPE) as a non-provisional application under 35 U.S.C. 111(a) and 37 CFR 1.53(b), including the assignment of a new non-provisional application number.

The non-provisional application number is **10/895,429.** The filing receipt for the non-provisional application number will be mailed to the applicant by OIPE in due course.

JANICE L TIPPETT
Office of Initial Patent Examination
(703) 308-0910

PART 2 - OFFICE COPY

UNITED STATES PATENT AND TRADEMARK OFFICE

UNITED STATES DEPARTMENT OF COMMERCE
United States Patent and Trademark Office
Address: COMMISSIONER FOR PATENTS
P.O. Box 1450
Alexandria, Virginia 22313-1450
www.uspto.gov

APPLICATION NUMBER	FILING OR 371(c) DATE	FIRST NAMED APPLICANT	ATTY. DOCKET NO.
60/505,596	09/24/2003	Sven Hooge	60,126-232

CONFIRMATION NO.

OC000000013633378

Gregory D. DeGrazia
The Pinehurst Office Center, Suite #101
39400 North Woodward Avenue
Bloomfield Hills, MI 48304-5151

Date Mailed: 08/25/2004

DECISION GRANTING REQUEST TO CONVERT TO NON-PROVISIONAL

This is a decision on the request under 37 CFR 1.53(c)(3) received in the U.S. Patent and Trademark Office on **03/12/2004,** to convert the above-identified application to a non-provisional application under 35 U.S.C. 111(a) and 37 CFR 1.53(b).

The request is granted.

The application will be processed in the Office of Initial Patent Examination (OIPE) as a non-provisional application under 35 U.S.C. 111(a) and 37 CFR 1.53(b), including the assignment of a new non-provisional application number.

The non-provisional application number is **10/895,430.** The filing receipt for the non-provisional application number will be mailed to the applicant by OIPE in due course.

JANICE L TIPPETT
Office of Initial Patent Examination
(703) 308-0910

PART 2 - OFFICE COPY

UNITED STATES PATENT AND TRADEMARK OFFICE

UNITED STATES DEPARTMENT OF COMMERCE
United States Patent and Trademark Office
Address: COMMISSIONER FOR PATENTS
P.O. Box 1450
Alexandria, Virginia 22313-1450
www.uspto.gov

APPLICATION NUMBER	FILING OR 371(c) DATE	FIRST NAMED APPLICANT	ATTY. DOCKET NO.
60/526,445	12/02/2003	Brett Busch	980049.408P1

CONFIRMATION NO.

OC000000013634167

40211
SEED INTELLECTUAL PROPERTY LAW GROUP PLLC
701 FIFTH AVENUE, SUITE 6300
SEATTLE, WA 98104-7092

Date Mailed: 08/25/2004

DECISION GRANTING REQUEST TO CONVERT TO NON-PROVISIONAL

This is a decision on the request under 37 CFR 1.53(c)(3) received in the U.S. Patent and Trademark Office on **03/30/2004,** to convert the above-identified application to a non-provisional application under 35 U.S.C. 111(a) and 37 CFR 1.53(b).

The request is granted.

The application will be processed in the Office of Initial Patent Examination (OIPE) as a non-provisional application under 35 U.S.C. 111(a) and 37 CFR 1.53(b), including the assignment of a new non-provisional application number.

The non-provisional application number is **10/895,431.** The filing receipt for the non-provisional application number will be mailed to the applicant by OIPE in due course.

JANICE L TIPPETT
Office of Initial Patent Examination
(703) 308-0910

PART 2 - OFFICE COPY

UNITED STATES PATENT AND TRADEMARK OFFICE

Commissioner for Patents
United States Patent and Trademark Office
P.O. Box 1450
Alexandria, VA 22313-1450
www.uspto.gov

MCDONNELL BOEHNEN HULBERT @
BERGHOFF LLP
300 SOUTH WACKER DRIVE
SUITE 3100
CHICAGO IL 60606

MAILED

AUG 21 2009

OFFICE OF PETITIONS

In re Application of :
Busch et al. :
Application No. 10/895,431 :
Filed: December 2, 2003 :
Attorney Docket No. :
EXS403C1(06-007-E) :

ON APPLICATION FOR
PATENT TERM ADJUSTMENT

This is in response to the APPLICATION FOR PATENT TERM ADJUSTMENT RECONSIDERATION UNDER 37 C.F.R. § 1.705(B) filed June 26, 2009. Applicants submit that the correct patent term adjustment to be indicated on the patent is five hundred fifty-nine (559) days, not one hundred sixty-nine (169) days as calculated by the Office as of the mailing of the initial determination of patent term adjustment. Applicants request this correction solely on the basis that the Office will take in excess of three years to issue this patent.

As the instant application for patent term adjustment requests reconsideration of the patent term adjustment as it relates to the Office's failure to issue the patent within 3 years of the filing date, the application for patent term adjustment under 37 CFR 1.705(b) is **DISMISSED as PREMATURE**.

Knowledge of the actual date the patent issues is required to calculate the amount, if any, of additional patent term patentee is entitled to for Office failure to issue the patent within 3 years. See § 1.702(b). (This is true even where a request for continued examination (RCE) was filed). The computer will not undertake the § 1.702(b) calculation until the actual date of issuance of the patent has been determined. Likewise, the computer will not calculate any further Office delay under § 1.702(a)(4) or applicant delay under § 1.704(c)(10) until the actual date of issuance of the patent has been determined. As

such, the Office cannot make a determination on the correctness of the patent term adjustment until the patent has issued.

Requesting reconsideration of the patent term adjustment to be indicated on the patent under 37 CFR 1.705(b) based on the initial determination of patent term adjustment and a projected issuance date of the patent (or even the filing date of the request for continued examination) is premature. Accordingly, it is appropriate to dismiss as premature such a request.

Rather than file an application for patent term adjustment under 37 CFR 1.705(b) contesting the 37 CFR 1.702(b) calculation at the time of the mailing of the notice of allowance, applicant is advised that they may wait until the time of the issuance of the patent and file a request for reconsideration of the patent term adjustment pursuant to 37 CFR 1.705(d). As the USPTO does not calculate the amount of time earned pursuant to 37 CFR 1.702(b) until the time of the issuance of the patent, the Office will consider any request for reconsideration of the patent term adjustment due to an error in the calculation of 37 CFR 1.702(b) to be timely if the request for reconsideration is filed within two months of the issuance of the patent. However, as to all other bases for contesting the initial determination of patent term adjustment received with the notice of allowance, applicant must timely file an application for patent term adjustment prior to the payment of the issue fee[1].

The Office acknowledges submission of the $200.00 fee set forth in 37 CFR 1.18(e) for consideration of the application for patent term adjustment under 37 CFR 1.705(b).

---

[1] For example, if applicant disputes both the calculation of patent term adjustment under 37 CFR 1.702(a)(1) for Office failure to mail a first Office action or notice of allowance not later than fourteen months after the date on which the application was filed and under 37 CFR 1.702(b) for Office failure to issue a patent within three years of the actual filing date of the application, then applicant must still timely file an application for patent term adjustment prior to the payment of the issue fee to contest the calculation of Office delay in issuing a first Office action or notice of allowance. See 37 CFR 1.705(b) and 35 U.S.C. 154(b)(3)(B). A dispute as to the calculation of the §1.702(a)(1) period raised on request for reconsideration of patent term adjustment under 37 CFR 1.705(d) will be dismissed as untimely filed.

Any request for reconsideration of the patent term adjustment indicated on the patent must be timely filed within 2 months after issuance pursuant to 37 CFR 1.705(d) and must include payment of the required fee under 37 CFR 1.18(e).

The Office of Data Management has been advised of this decision. This application is being referred to the Office of Data Management for issuance of the patent.

Telephone inquiries specific to this matter should be directed to Petitions Attorney Charlema Grant at (571) 272-3215.

Kery A Fries

Kery Fries
Senior Legal Advisor Attorney
Office of Patent Legal Administration

Application Number Information

Application Number: **10/895431**
Assignments
Filing or 371(c) Date: **12/02/2003** eDan
Effective Date: **12/02/2003**
Application Received: **12/04/2003**
Pat. Num./Pub. Num: **/20050054634**
Issue Date: **00/00/0000**
Date of Abandonment: **00/00/0000**
Attorney Docket Number: **EXS403C1 (06-007-E)**

Examiner Number: **73624 / COLEMAN, BRENDA**
Group Art Unit: **1624** **IFW Madras**
Class/Subclass: **514/215.000**
Lost Case: **NO**
Interference Number:
Unmatched Petition: **NO**
L&R Code: Secrecy Code:**1**
Third Level Review: **NO** Secrecy Order: **NO**

Status: **95 /PUBLICATIONS -- ISSUE FEE PAYMENT VERIFIED** Status Date: **06/29/2009**
Confirmation Number: **5741** Oral Hearing: **NO**
Title of Invention: **AZEPINOINDOLE DERIVATIVES AS PHARMACEUTICAL AGENTS**

Bar Code	PALM Location	Location Date	Charge to Loc	Charge to Name	Employee Name	Location

Busch et al

Appln Info Contents | Petition Info | Atty/Agent Info | Continuity/Reexam | Foreign Data

Search Another: Application # [ ] Search **or Patent#** [ ] Search

Pct. 4/26/09

PCT / [ ] / [ ] Search **or PG PUBS #** [ ] Search

PTA & PCI

atty - OK
add - OK

Attorney Docket # [ ] Search
Bar Code # [ ] Search

To go back, right click here and select Back. To go forward, right click here and select Forward. To refresh, right click here and select Refresh.
Back to OASIS | Home page

http://EXPOWEB1:8001/cgi-bin/expo/GenInfo/snquery.pl?APPL_ID=10895431

PTA 3/31/09 (169) - 559

RAM Fee History Query

Revenue Accounting and Management

Name/Number: 10895431 Total Records Found: 19

Start Date: Any Date End Date: Any Date

Accounting Date	Sequence Num.	Fee Type	Fee Code	Fee Amount	Mailroom Date	Payment Method
06/26/2009	00013325	4	1501	$1,510.00	06/26/2009	DA 132490
06/26/2009	00013324	4	1455	$200.00	06/26/2009	DA 132490 -PTA
06/26/2009	00013328	4	1504	$300.00	06/26/2009	DA 132490
03/18/2009	00026323	4	1814	$140.00	03/18/2009	DA 132490
09/18/2008	00002581	4	1253	$1,050.00	09/17/2008	DA 132490
09/18/2008	00002582	4	1806	$180.00	09/17/2008	DA 132490
09/18/2008	00002580	4	1202	$50.00	09/17/2008	DA 132490
01/07/2008	00000008	1	2202	$25.00	12/27/2007	DA 132490
12/28/2007	00004178	4	1808	$130.00	12/27/2007	DA 132490
12/28/2007	00004176	4	1801	$810.00	12/27/2007	DA 132490
12/28/2007	00004175	4	1255	$2,230.00	12/27/2007	DA 132490
06/01/2007	00007689	4	1253	$1,020.00	06/01/2007	DA 132490
06/01/2007	00007690	4	1401	$500.00	06/01/2007	DA 132490
03/15/2007	00003208	4	1251	$120.00	03/15/2007	DA 132490
09/13/2006	00000552	4	8021	$40.00	09/13/2006	DA 132490
07/25/2006	00000274	3	8007	$20.00	07/24/2006	DA 190340
08/25/2004	00000011	1	2051	$65.00	03/30/2004	CK
08/25/2004	00000010	1	2001	$385.00	03/30/2004	CK
08/25/2004	00000012	1	2202	$423.00	03/30/2004	CK

Date Calculator Result

From 12/02/2006 to 12/27/2007 is 390 days.

New calculation

Date Calculator Result

From 12/02/2006 to 12/27/2007 is 390 days.

New calculation

IN THE UNITED STATES PATENT AND TRADEMARK OFFICE
Docket No. 06-007-E

In re Application of Busch *et al.*	}
Application No.: 10/895,431	} Group Art Unit: 1624
Filing Date: December 2, 2003 *(Or 371(c) Date)*	} Confirmation No.: 5741
Entitled: AZEPINOINDOLE DERIVATIVES AS PHARMACEUTICAL AGENTS	} Examiner: COLEMAN, Brenda L.

PETITION FOR RECONSIDERATION OF PATENT TERM ADJUSTMENT FILED UNDER 37 C.F.R. § 1.705(b)

Mail Stop Petition
Commissioner for Patents
P.O. Box 1450
Alexandria, VA 22313-1450

Sir:

The applicant petitions for adjustment of the Patent Term Adjustment ("PTA") of the patent to be issued from the instant application. The applicant submits that adjustments under 35 U.S.C. § 154(b)(1)(A) and 35 U.S.C. § 154(b)(1)(B) have not been properly accorded. As a result, the applicant is being denied a portion of patent term to which it was entitled. Specifically, the applicant submits it is entitled to 559 days of PTA, not the 169 days as calculated by the Patent Office

In *Wyeth v. Dudas,* 580 F. Supp. 2d 138 (D.D.C. Sept 30, 2008), the district court held that delays under the provisions of §§ 154(b)(1)(A) and (B) should be added together, with the exception that delay periods under §§ 154(b)(1)(A) and (B) that occur on the same calendar day are counted once, not twice. The PTA as calculated by the PTO neglects to include delays under § 154(b)(1)(B).

35 USC § 154(b)(1)(A) provides a one-day extension of patent term for every day that issuance of a patent is delayed by a failure of the PTO to comply with various enumerated statutory deadlines, including, fourteen months for a first office action; four months to respond to

CERTIFICATE OF TRANSMISSION (37 C.F.R. 1.8)
I hereby certify that this correspondence is being transmitted to the USPTO via the USPTO EFS on June 26, 2009.

Date: June 26, 2009

/Michael S. Greenfield/
Michael S. Greenfield

a reply; four months to issue a patent after the fee is paid; and the like. 35 U.S.C. § 154(b)(1)(B)) provides a one-day term extension for every day greater than three years after the filing date that it takes for the patent to issue. The Court labeled the periods of delay encompassed by § 154(b)(1)(A) as "A delays" or "A periods," and the period that begins after the three-year window has closed as the "B delay" or the "B period."

The above delays are subject to the limitations of § 154(b)(2)(A), which states that:

> To the extent that periods of delay attributable to grounds specified in paragraph (1) overlap, the period of any adjustment granted under this subsection shall not exceed the actual number of days the issuance of the patent was delayed.

The *Wyeth* court construed § 154(b)(2)(B) to mean that "[t]he only way that A and B periods of time can 'overlap' is if they occur on the same day." Thus, when calculating the Patent Term Adjustment, the A and B periods must be added except any A period and B period which occur on the same day.

In the present case, the A period is 356 days for the Office:

1. Issuing a first action under 35 U.S.C. § 132 at 14 months and 356 days after the '431 application was filed, 37 CFR 1.703(a)(1);

The B period is 390 days (from December 3, 2006 until the December 27, 2007 filing of a Request for Continued Examination) 37 CFR 1.703(b)).

Applicants' delay (37 CFR 1.704) is 187 days for:

1. Filing a response to the Office Action mailed January 24, 2006 at 3 months and 3 days after mailing, 37 CFR 1.704(b);
2. Filing a response to the Office Action mailed July 13, 2006 at 3 months and 3 days after mailing, 37 CFR 1.704(b);
3. Filing a response to the Office action mailed December 4, 2006 at 3 months and 89 days after mailing, 37 CFR 1.704(b); and
4. Filing a response to the Office action mailed March 17, 2008 at 3 months and 92 days after mailing, 37 CFR 1.704(b).

The A and B periods do not overlap.

Thus, the total delay is 356 + 390 – 187 - 0 = 559 days, not 169 days as calculated by the USPTO.

The patent to be issued from the '431 application is subject to a terminal disclaimer U.S. Patent No. 7,485,634 as the term of the '634 patent is defined in 35 U.S.C. 154 and 173.

Conclusion

For all the reasons stated above, Patentees respectfully request the USPTO to recalculate the Patent Term Adjustment and add up the period of total delay under 35 U.S.C. § 154(b)(1)(A) and 35 U.S.C. § 154(b)(1)(B).

Fee Authorization: The Commissioner is authorized to charge the cost of any fees that may be associated with the filing of this Petition to Deposit Account No. 13-2490.

If there are any questions or comments regarding this application, the Office is encouraged to contact the undersigned in order to expedite prosecution.

Respectfully submitted,

Date: June 26, 2009

/Michael S. Greenfield/
Michael S. Greenfield
Registration No. 37,142

McDonnell Boehnen Hulbert & Berghoff LLP
300 South Wacker Drive
Chicago, IL 60606

Telephone: 312-913-0001
Facsimile: 312-913-0002

UNITED STATES PATENT AND TRADEMARK OFFICE

Commissioner for Patents
United States Patent and Trademark Office
P.O. Box 1450
Alexandria, VA 22313-1450
www.uspto.gov

MCDONNELL BOEHNEN HULBERT @ BERGHOFF LLP
300 SOUTH WACKER DRIVE
SUITE 3100
CHICAGO IL 60606

COPY MAILED

DEC 18 2009

OFFICE OF PETITIONS

In re Patent No. 7,595,311	
Busch et al.	
Issue Date: September 29, 2009	
Application No. 10/895,431	DECISION ON REQUEST FOR
Filed: December 2, 2003	RECONSIDERATION OF
Attorney Dkt. No. EXS403C1 (06-007-E)	PATENT TERM ADJUSTMENT
Title: AZEPINOINDOLE DERIVATIVES AS PHARMACEUTICAL AGENTS	

This is a decision on the "PETITION FOR RECONSIDERATION OF PATENT TERM ADJUSTMENT FILED UNDER 37 C.F.R. §1.705(d)," filed November 24, 2009, requesting that the patent term adjustment determination for the above-identified patent be changed from two hundred three (203) days to five hundred fifty-nine (559) days.

The request for reconsideration of patent term adjustment is **DISMISSED**.

On September 24, 2009, the above-identified application matured into US Patent No. 7,595,311 with a patent term adjustment of 203 days. This request for reconsideration of patent term adjustment was timely filed within two months of the issue date of the patent. See 37 C.F.R. § 1.705(d).

The Office acknowledges submission of the $200.00 fee set forth in 37 C.F.R. § 1.18(e). No additional fees are required.

Patentees request recalculation of the patent term adjustment based on the decision in Wyeth v. Dudas, 580 F. Supp. 2d 138, 88 U.S.P.Q. 2d 1538 (D.D.C. 2008). Patentees maintain that the patent is entitled to an additional 390 days of patent term adjustment due to the Three Year Delay by the Office. Thus,

patentees assert entitlement to an overall 559 days of patent term adjustment (390 days, pursuant to 37 CFR 1.702(b) *plus* 356 days pursuant to 37 CFR 1.703(a) *less* 187 days of applicant delay. Patentees do not dispute the 187-day reduction for applicant delay.

The Office finds that as of December 26, 2007, the day before the date of the filing of the request for continued examination (RCE) on December 27, 2007, the application was pending three years and 389 days after its filing date (December 2, 2006 to December 26, 2007). An entry of a period of adjustment of 356 days was entered for Office delay. At issue is whether patentee should accrue an additional 389 days of patent term adjustment for the Office taking in excess of three years to issue the patent as well as 356 days for Office failure to take a certain action within a specified time frame (or examination delay).

Patentee's calculation of the period of overlap is inconsistent with the Office's interpretation of this provision. 35 U.S.C. 154(b)(2)(A) limits the adjustment of patent term, as follows:

> To the extent that the periods of delay attributable to grounds specified in paragraph (1) overlap, the period of any adjustment granted under this subsection shall not exceed the actual number of days the issuance of the patent was delayed.

Likewise, 37 CFR 1.703(f) provides that:

> To the extent that periods of delay attributable to the grounds specified in §1.702 overlap, the period of adjustment granted under this section shall not exceed the actual number of days the issuance of the patent was delayed.

As explained in *Explanation of 37 CFR 1.703(f) and of the United States Patent and Trademark Office Interpretation of 35 U.S.C. 154(b)(2)(A)*, 69 Fed. Reg. 34283 (June 21, 2004), the Office interprets 35 U.S.C. 154(b)(2)(A) as permitting either patent term adjustment under 35 U.S.C. 154(b)(1)(A)(i)-(iv), or patent term adjustment under 35 U.S.C. 154(b)(1)(B), but not as permitting patent term adjustment under both 35 U.S.C. 154(b)(1)(A)(i)-(iv) and 154(b)(1)(B). Accordingly, the Office implements the overlap provision as follows:

> If an application is entitled to an adjustment under 35 U.S.C. 154(b)(1)(B), the entire period during which the application was pending (except for periods excluded under 35 U.S.C. 154(b)(1)(B)(i)-(iii)), and not just the period beginning three years after the actual filing date of the application, is the period of delay under 35 U.S.C. 154(b)(1)(B) in determining whether periods of delay overlap under 35 U.S.C. 154(b)(2)(A). Thus, any days of delay for Office issuance of the patent more than 3 years after the filing date of the application, which overlap with the days of patent term adjustment accorded prior to the issuance of the patent will not result in any additional patent term adjustment. See 35 U.S.C. 154(b)(1)(B), 35 U.S.C. 154(b)(2)(A), and 37 CFR § 1.703(f). See *Changes to Implement Patent Term Adjustment Under Twenty Year Term; Final Rule*, 65 Fed. Reg. 56366 (Sept. 18, 2000). See also *Revision of Patent Term Extension and Patent Term Adjustment Provisions; Final Rule*, 69 Fed. Reg. 21704 (April 22, 2004), 1282 Off. Gaz. Pat. Office 100 (May 18, 2004). See also *Explanation of 37 CFR 1.703(f) and of the United States Patent and Trademark Office Interpretation of 35 U.S.C. 154(b)(2)(A)*, 69 Fed. Reg. 34283 (June 21, 2004).

As such, the period for over 3 year pendency does not overlap only to the extent that the actual dates in the period beginning three years after the date on which the application was filed overlap with the actual dates in the periods for failure of the Office to take action within specified time frames.

In this instance, the relevant period under 35 U.S.C. 154(b)(1)(B) in determining whether periods of delay "overlap" under 35 U.S.C. 154(b)(2)(A) is the filing date December 2, 2003 until December 26, 2007, the day before the filing of the RCE on December 27, 2007. Prior to the issuance of the patent, 356 days of patent term adjustment were accorded for the Office failing to respond within a specified time frame during the pendency of the application.

Entry of both 389 days pursuant to 37 CFR §1.702(b) and 356 days pursuant to 37 CFR §1.702(a) is neither permitted nor warranted. The Office did not delay 356 days and then delay another 389 days. The greater period, 389 days, is the actual number of days issuance of the patent was delayed by the Office. Accordingly, at issuance the Office entered an additional 34 days of patent

term adjustment for taking in excess of three years to issue the patent for a total Office delay of 390 days.

In view thereof, the Office affirms that the revised determination of patent term adjustment at the time of the issuance of the patent was 203 (390 - 187) days.

In view thereof, no adjustment to the patent term will be made.

Telephone inquiries specific to this matter should be directed to Charlema Grant, Petitions Attorney, at (571) 272-3215.

/ALESIA M. BROWN/

Alesia M. Brown
Petitions Attorney
Office of Petitions

UNITED STATES PATENT AND TRADEMARK OFFICE

UNITED STATES DEPARTMENT OF COMMERCE
United States Patent and Trademark Office
Address: COMMISSIONER FOR PATENTS
P.O. Box 1450
Alexandria, Virginia 22313-1450
www.uspto.gov

MCDONNELL BOEHNEN HULBERT @ BERGHOFF LLP
300 SOUTH WACKER DRIVE
SUITE 3100
CHICAGO, IL 60606

Mail Date: 04/21/2010

Applicant	: Brett Busch	: DECISION ON REQUEST FOR
Patent Number	: 7595311	: RECALCULATION of PATENT
Issue Date	: 09/29/2009	: TERM ADJUSTMENT IN VIEW
Appliction No	: 10/895,431	: OF WYETH AND NOTICE OF INTENT TO
Filed	: 12/02/2003	: ISSUE CERTIFICATE OF CORRECTION
		:

The Request for Recalculation is **GRANTED** to the extent indicated.

The patent term adjustment has been determined to be **349** days. The USPTO will *sua sponte* issue a certificate of correction reflecting the amount of PTA days determined by the recalculation.

Prior to the issuance of the certificate of correction, the USPTO will afford patentee an opportunity to be heard and request reconsideration. Accordingly, patentee has **one month or thirty (30) days**, whichever is longer, to file a request for reconsideration of this patent term adjustment calculation. See 35 U.S.C. 154(b)(3)(B)(ii) and 37 CFR 1.322(a)(4). No extensions of time will be granted under 37 CFR 1.136.

Patentee should use document code PET.OP if electronically filing a request for reconsideration of this patent term adjustment calculation. The patentee must also include the information required by 37 CFR 1.705(b)(2) and the fee required by 37 CFR 1.18(e). If patentee does not file a timely request for reconsideration of this patent term adjustment calculation including the information required by 37 CFR 1.705(b)(2) and the fee required by 37 CFR 1.18(e), the USPTO will issue a certificate of correction reflecting the PTA determination noted above.

Patentee should be aware that in order to preserve the right to review in the United States District Court for the District of Columbia of the USPTO patent term adjustment determination, patentee must ensure that he or she also take the steps required under 35 U.S.C. 154(b)(4)(A) in a timely manner. Nothing in the request for recalculation should be construed as providing an alternative time frame for commencing a civil action under 35 U.S.C. 154(b)(4)(A).

Any questions concerning this decision should be directed to the Office of Patent Legal Administration at 571-272-7702.

UNITED STATES PATENT AND TRADEMARK OFFICE

UNITED STATES DEPARTMENT OF COMMERCE
United States Patent and Trademark Office
Address: COMMISSIONER FOR PATENTS
P.O. Box 1450
Alexandria, Virginia 22313-1450
www.uspto.gov

APPLICATION NUMBER	FILING OR 371(c) DATE	FIRST NAMED APPLICANT	ATTY. DOCKET NO.
60/560,316	04/06/2004	David C. Pollock	2307-3-2

CONFIRMATION NO.

OC000000013650803

Jeffrey J King
Woodcock Washburn LLP
One Liberty Place - 46th Floor
Philadelphia, PA 19103

Date Mailed: 08/26/2004

DECISION GRANTING REQUEST TO CONVERT TO NON-PROVISIONAL

This is a decision on the request under 37 CFR 1.53(c)(3) received in the U.S. Patent and Trademark Office on **05/18/2004,** to convert the above-identified application to a non-provisional application under 35 U.S.C. 111(a) and 37 CFR 1.53(b).

The request is granted.

The application will be processed in the Office of Initial Patent Examination (OIPE) as a non-provisional application under 35 U.S.C. 111(a) and 37 CFR 1.53(b), including the assignment of a new non-provisional application number.

The non-provisional application number is **10/895,432.** The filing receipt for the non-provisional application number will be mailed to the applicant by OIPE in due course.

JANICE L TIPPETT
Office of Initial Patent Examination
(703) 308-0910

PART 2 - OFFICE COPY

Copied from 60560316 on 12/27/2004

UNITED STATES PATENT AND TRADEMARK OFFICE

Commissioner for Patents
United States Patent and Trademark Office
P.O. Box 1450
Alexandria, VA 22313-1450
www.uspto.gov

JEFFREY J KING
WOODCOCK WASHBURN LLP
ONE LIBERTY PLACE – 46TH FLOOR
PHILADELPHIA, PA 19103

COPY MAILED

SEP 19 2007

OFFICE OF PETITIONS

In re Application of	:	
Pollock, David C.	:	
Application No. 10/895,432	:	ON PETITION
Filed: April 6, 2004	:	
Attorney Docket No. VOET-1-0204	:	

This is a decision on the petition under 37 C.F.R. § 1.137(b), filed September 7, 2007, to revive the above-identified application.

The petition is **GRANTED.**

The petition satisfies the conditions for revival pursuant to the provisions of 37 CFR 1.137(b) in that (1) the reply in the form of a Notice of Appeal; (2) the petition fee; and (3) the required statement of unintentional delay have been received. Accordingly, the response has been accepted as having been unintentionally delayed.

The Notice of Appeal filed September 7, 2007, has been entered and made of record. Accordingly, the 2-month period for filing the appeal brief accompanied by the fee required by law, runs from the date of this decision.

This matter is being referred to Technology Center 1700 for further processing.

Telephone inquiries regarding this decision should be directed to the undersigned at (571) 272-3206.

Liana Walsh
Petitions Examiner
Office of Petitions

UNITED STATES PATENT AND TRADEMARK OFFICE

UNITED STATES DEPARTMENT OF COMMERCE
United States Patent and Trademark Office
Address: COMMISSIONER FOR PATENTS
P.O. Box 1450
Alexandria, Virginia 22313-1450
www.uspto.gov

APPLICATION NUMBER	FILING OR 371(c) DATE	FIRST NAMED APPLICANT	ATTY DOCKET NO
60/484,607	07/01/2003	Michael L. Beigel	PREDYN-42896

CONFIRMATION NO.

OC000000014056717

26252
KELLY BAUERSFELD LOWRY & KELLEY, LLP
6320 CANOGA AVENUE
SUITE 1650
WOODLAND HILLS, CA 91367

Date Mailed: 10/12/2004

DECISION GRANTING REQUEST TO CONVERT TO NON-PROVISIONAL

This is a decision on the request under 37 CFR 1.53(c)(3) received in the U.S. Patent and Trademark Office on **01/08/2004,** to convert the above-identified application to a non-provisional application under 35 U.S.C. 111(a) and 37 CFR 1.53(b).

The request is granted.

The application will be processed in the Office of Initial Patent Examination (OIPE) as a non-provisional application under 35 U.S.C. 111(a) and 37 CFR 1.53(b), including the assignment of a new non-provisional application number.

The non-provisional application number is **10/895,434.** The filing receipt for the non-provisional application number will be mailed to the applicant by OIPE in due course.

JANICE L. TIPPETT
Office of Initial Patent Examination
(703) 308-0910

PART 2 - OFFICE COPY

Copied from 60484607 on 11/12/2004

UNITED STATES PATENT AND TRADEMARK OFFICE

UNITED STATES DEPARTMENT OF COMMERCE
United States Patent and Trademark Office
Address: COMMISSIONER FOR PATENTS
P.O. Box 1450
Alexandria, Virginia 22313-1450
www.uspto.gov

APPLICATION NUMBER	FILING OR 371(c) DATE	FIRST NAMED APPLICANT	ATTY. DOCKET NO
60/484,063	06/30/2003	Brent L. Anderson	BLA-2

CONFIRMATION NO.

OC000000014061775

34491
JAMES K. POOLE, ESQ.
P.O. BOX 925
LOVELAND, CO 80539

Date Mailed: 10/12/2004

DECISION GRANTING REQUEST TO CONVERT TO NON-PROVISIONAL

This is a decision on the request under 37 CFR 1.53(c)(3) received in the U.S. Patent and Trademark Office on **06/30/2004,** to convert the above-identified application to a non-provisional application under 35 U.S.C. 111(a) and 37 CFR 1.53(b).

The request is granted.

The application will be processed in the Office of Initial Patent Examination (OIPE) as a non-provisional application under 35 U.S.C. 111(a) and 37 CFR 1.53(b), including the assignment of a new non-provisional application number.

The non-provisional application number is **10/895,436.** The filing receipt for the non-provisional application number will be mailed to the applicant by OIPE in due course.

JANICE L TIPPETT
Office of Initial Patent Examination
(703) 308-0910

PART 2 - OFFICE COPY

Copied from 60484063 on 12/27/2004

UNITED STATES PATENT AND TRADEMARK OFFICE

UNITED STATES DEPARTMENT OF COMMERCE
United States Patent and Trademark Office
Address: COMMISSIONER FOR PATENTS
P.O. Box 1450
Alexandria, Virginia 22313-1450
www.uspto.gov

APPLICATION NUMBER	FILING OR 371(c) DATE	FIRST NAMED APPLICANT	ATTY. DOCKET NO.
60/549,812	03/03/2004	Richard D. Anderson	1315US

CONFIRMATION NO.

OC000000015587372

Graco Minnesota Inc.
P. O. Box 1441
Minneapolis, MN 55440-1441

Date Mailed: 03/28/2005

DECISION GRANTING REQUEST TO CONVERT TO NON-PROVISIONAL

This is a decision on the request under 37 CFR 1.53(c)(3) received in the U.S. Patent and Trademark Office on **02/24/2005,** to convert the above-identified application to a non-provisional application under 35 U.S.C. 111(a) and 37 CFR 1.53(b).

The request is granted.

The application will be processed in the Office of Initial Patent Examination (OIPE) as a non-provisional application under 35 U.S.C. 111(a) and 37 CFR 1.53(b), including the assignment of a new non-provisional application number.

The non-provisional application number is **10/895,437.** The filing receipt for the non-provisional application number will be mailed to the applicant by OIPE in due course.

JANICE L TIPPETT
Office of Initial Patent Examination
(703) 308-0910

PART 2 - OFFICE COPY

Copied from 60549812 on 03/31/2005

UNITED STATES PATENT AND TRADEMARK OFFICE

UNITED STATES DEPARTMENT OF COMMERCE
United States Patent and Trademark Office
Address: COMMISSIONER FOR PATENTS
P.O. Box 1450
Alexandria, Virginia 22313-1450
www.uspto.gov

APPLICATION NUMBER	FILING OR 371(c) DATE	FIRST NAMED APPLICANT	ATTY. DOCKET NO.
60/495,144	08/15/2003	Holger Lange	

CONFIRMATION NO.

OC000000014407442

Science & Technology International
Makai Tower, Suite 3100
733 Bishop St.
Honolulu, HI 96813

Date Mailed: 11/19/2004

DECISION GRANTING REQUEST TO CONVERT TO NON-PROVISIONAL

This is a decision on the request under 37 CFR 1.53(c)(3) received in the U.S. Patent and Trademark Office on **08/13/2004,** to convert the above-identified application to a non-provisional application under 35 U.S.C. 111(a) and 37 CFR 1.53(b).

The request is granted.

The application will be processed in the Office of Initial Patent Examination (OIPE) as a non-provisional application under 35 U.S.C. 111(a) and 37 CFR 1.53(b), including the assignment of a new non-provisional application number.

The non-provisional application number is **10/895,440.** The filing receipt for the non-provisional application number will be mailed to the applicant by OIPE in due course.

JANICE L TIPPETT
Office of Initial Patent Examination
(703) 308-0910

PART 2 - OFFICE COPY

UNITED STATES PATENT AND TRADEMARK OFFICE

UNITED STATES DEPARTMENT OF COMMERCE
United States Patent and Trademark Office
Address: COMMISSIONER FOR PATENTS
P.O. Box 1450
Alexandria, Virginia 22313-1450
www.uspto.gov

APPLICATION NUMBER	FILING OR 371(c) DATE	FIRST NAMED APPLICANT	ATTY. DOCKET NO.
60/620,855	10/22/2004	Edith Wojeski	

CONFIRMATION NO.

OC000000016844398

46979
KARL BRACK
19 PROCTOR STREET
WORCESTER, MA 01606

Date Mailed: 08/23/2005

DECISION DISMISSING REQUEST UNDER 37 CFR 1.53(c)(3) TO CONVERT TO NON-PROVISIONAL

This is a decision on the request under 37 CFR 1.53(c)(3) received in the U.S. Patent and Trademark Office on **01/25/2005,** to convert the above-identified application to a non-provisional application under 35 U.S.C. 111(a) and 37 CFR 1.53(b).

The request is dismissed because it does not comply with all the requirements of 37 CFR 1.53(c)(3).

A grantable request under 37 CFR 1.53(c)(3) to convert a provisional application to a non-provisional application must be accompanied by the fee set forth in 37 CFR 1.17(i) and an amendment including at least one claim if no claim is present in the provisional application and be filed prior to the earliest of: abandonment of the provisional application filed under 37 CFR 1.53(c) or expiration of twelve months after the filing date of the provisional application filed under 37 CFR 1.53(c). The present request is not grantable because:

It is not accompanied by the fee required by 37 CFR 1.17(i).

Any request for reconsideration of this decision must be filed within TWO MONTHS of the date of this decision. This time limit may NOT be extended pursuant to 37 CFR 1.136. The request must be accompanied by the items noted above.

Any inquiries related to this decision should be directed to Customer Service at (703) 308-1202.

A copy of this notice MUST be returned with the reply.

JANICE L TIRPETT
Office of Initial Patent Examination

PART 2 - OFFICE COPY

Copied from 60620855 on 09/22/2005

UNITED STATES PATENT AND TRADEMARK OFFICE

UNITED STATES DEPARTMENT OF COMMERCE
United States Patent and Trademark Office
Address: COMMISSIONER FOR PATENTS
P.O. Box 1450
Alexandria, Virginia 22313-1450
www.uspto.gov

APPLICATION NUMBER	FILING OR 371(c) DATE	FIRST NAMED APPLICANT	ATTY. DOCKET NO.
60/502,591	09/12/2003	Paul A. Spence	SPEN-03B

CONFIRMATION NO.

OC000000014431710

Kevin G. Rooney
WOOD, HERRON & EVANS, L.L.P.
2700 Carew Tower
441 Vine Street
Cincinnati, OH 45202-2917

Date Mailed: 11/22/2004

DECISION GRANTING REQUEST TO CONVERT TO NON-PROVISIONAL

This is a decision on the request under 37 CFR 1.53(c)(3) received in the U.S. Patent and Trademark Office on **09/10/2004,** to convert the above-identified application to a non-provisional application under 35 U.S.C. 111(a) and 37 CFR 1.53(b).

The request is granted.

The application will be processed in the Office of Initial Patent Examination (OIPE) as a non-provisional application under 35 U.S.C. 111(a) and 37 CFR 1.53(b), including the assignment of a new non-provisional application number.

The non-provisional application number is **10/895,442.** The filing receipt for the non-provisional application number will be mailed to the applicant by OIPE in due course.

JANICE L TIPPETT
Office of Initial Patent Examination
(703) 308-0910

PART 2 - OFFICE COPY

Copied from 60502591 on 12/07/2004

UNITED STATES PATENT AND TRADEMARK OFFICE

UNITED STATES DEPARTMENT OF COMMERCE
United States Patent and Trademark Office
Address: COMMISSIONER FOR PATENTS
P.O. Box 1450
Alexandria, Virginia 22313-1450
www.uspto.gov

APPLICATION NUMBER	FILING OR 371(c) DATE	FIRST NAMED APPLICANT	ATTY. DOCKET NO.
60/503,159	09/15/2003	Andrew Stronach	311.008US1

CONFIRMATION NO.

OC000000014430997

Mark A. Litman & Associates, P.A.
York Business Center
Suite 205
3209 West 76th St.
Edina, MN 55435

Date Mailed: 11/22/2004

DECISION DISMISSING REQUEST UNDER 37 CFR 1.53(c)(3) TO CONVERT TO NON-PROVISIONAL

This is a decision on the request under 37 CFR 1.53(c)(3) received in the U.S. Patent and Trademark Office on **09/10/2004,** to convert the above-identified application to a non-provisional application under 35 U.S.C. 111(a) and 37 CFR 1.53(b).

The request is dismissed because it does not comply with all the requirements of 37 CFR 1.53(c)(3).

A grantable request under 37 CFR 1.53(c)(3) to convert a provisional application to a non-provisional application must be accompanied by the fee set forth in 37 CFR 1.17(i) and an amendment including at least one claim if no claim is present in the provisional application and be filed prior to the earliest of: abandonment of the provisional application filed under 37 CFR 1.53(c) or expiration of twelve months after the filing date of the provisional application filed under 37 CFR 1.53(c). The present request is not grantable because:

It is not accompanied by the fee required by 37 CFR 1.17(i).

Any request for reconsideration of this decision must be filed within TWO MONTHS of the date of this decision. This time limit may NOT be extended pursuant to 37 CFR 1.136. The request must be accompanied by the items noted above.

Any inquiries related to this decision should be directed to Customer Service at (703) 308-1202.

A copy of this notice MUST be returned with the reply.

JANICE L TIPRETT
Office of Initial Patent Examination

PART 2 - OFFICE COPY

Copied from 60503159 on 02/20/2005

UNITED STATES PATENT AND TRADEMARK OFFICE

UNITED STATES DEPARTMENT OF COMMERCE
United States Patent and Trademark Office
Address: COMMISSIONER FOR PATENTS
P.O. Box 1450
Alexandria, Virginia 22313-1450
www.uspto.gov

APPLICATION NUMBER	FILING OR 371(c) DATE	FIRST NAMED APPLICANT	ATTY. DOCKET NO.
60/503,159	09/15/2003	Andrew Stronach	311.008US1

CONFIRMATION NO.

OC000000015025916

Mark A. Litman & Associates, P.A.
York Business Center
Suite 205
3209 West 76th St.
Edina, MN 55435

Date Mailed: 01/25/2005

DECISION GRANTING REQUEST TO CONVERT TO NON-PROVISIONAL

This is a decision on the request under 37 CFR 1.53(c)(3) received in the U.S. Patent and Trademark Office on , to convert the above-identified application to a non-provisional application under 35 U.S.C. 111(a) and 37 CFR 1.53(b).

The request is granted.

The application will be processed in the Office of Initial Patent Examination (OIPE) as a non-provisional application under 35 U.S.C. 111(a) and 37 CFR 1.53(b), including the assignment of a new non-provisional application number.

The non-provisional application number is **10/895,448.** The filing receipt for the non-provisional application number will be mailed to the applicant by OIPE in due course.

JANICE L TIPPETT
Office of Initial Patent Examination
(703) 308-0910

PART 2 - OFFICE COPY

Copied from 60503159 on 02/20/2005

UNITED STATES PATENT AND TRADEMARK OFFICE

Commissioner for Patents
United States Patent and Trademark Office
P.O. Box 1450
Alexandria, VA 22313-1450
www.uspto.gov

MARK A. LITMAN & ASSOCIATES, P.A.
YORK BUSINESS CENTER
SUITE 205
3209 WEST 76TH ST.
EDINA MN 55435

COPY MAILED

OCT 01 2007

OFFICE OF PETITIONS

In re Application of	:	
STRONACH, Andrew	:	
Application No. 10/895,448	:	DECISION ON PETITION
Filed: September 15, 2003	:	TO WITHDRAW
Attorney Docket No. **311.008US1**	:	FROM RECORD
	:	

This is a decision on the Request to Withdraw as attorney or agent of record under 37 C.F.R. § 1.36(b), filed August 20, 2007.

The request is **APPROVED**.

A grantable request to withdraw as attorney/agent of record must be signed by every attorney/agent seeking to withdraw or contain a clear indication that one attorney is signing on behalf of another/others. A request to withdraw will not be approved unless at least 30 (thirty) days would remain between the date of approval and the later of the expiration date of a time to file a response or the expiration date of the maximum time period which can be extended under 37 C.F.R. § 1.136(a).

The request was signed by Mark Litman, the sole attorney of record. Mark Litman has been withdrawn as attorney or agent of record. Applicant is reminded that there is no attorney of record at this time.

The request to change the correspondence of record is not acceptable as the requested correspondence address is not that of: (1) the first named signing inventor; or (2) an intervening assignee of the entire interest under 37 C.F.R 3.71. All future communications from the Office will be directed to the first named signing inventor at the first copied address below until otherwise properly notified by the applicant.

All future correspondence will be directed to inventor Andrew Stronach at the address indicated below. There is an outstanding Office action mailed July 11, 2007 that requires a reply from the applicant.

Telephone inquiries concerning this decision should be directed to Tredelle Jackson at 571-272-2783.

Monica A. Graves
Petitions Examiner
Office of Petitions

cc: **ANDREW STRONACH**
14875 BAYVIEW AVENUE
AURORA, ONTARIO L4G 3G8
CANADA

DATE 9/29/07 APPLICATION NUMBER 10/895448

DOC CODE N578 DOC DATE _____

DELIVER THE ATTACHED FIFLE/DOCUMENT TO THE TC SCANNING CENTER

CONTRACTOR: THE ATTACHED FILE/DOCUMENT MUST BE INDEXED AND SCANNED INTO IFW WITHIN **8** WORK HOURS; UPLOADING OF THE SCANNED IMAGES SHOULD OCCUR NO LATER THAN **16** WORK HOURS FOLLOWING RECEIPT OF THIS REQUEST

AFTER SCANNING, ORIGINAL DOCUMENTS SHOULD BE BOXED IN ACCORDANCE WITH INSTRUCTIONS

UNITED STATES PATENT AND TRADEMARK OFFICE

UNITED STATES DEPARTMENT OF COMMERCE
United States Patent and Trademark Office
Address: COMMISSIONER FOR PATENTS
P.O. Box 1450
Alexandria, Virginia 22313-1450
www.uspto.gov

APPLICATION NUMBER	FILING OR 371 (c) DATE	FIRST NAMED APPLICANT	ATTY. DOCKET NO./TITLE
10/895,448	09/15/2003	Andrew Stronach	311.008US1

CONFIRMATION NO. 1442

OC000000026086071

Mark A. Litman & Associates, P.A.
York Business Center
Suite 205
3209 West 76th St.
Edina, MN 55435

Date Mailed: 10/01/2007

NOTICE REGARDING CHANGE OF POWER OF ATTORNEY

This is in response to the Power of Attorney filed 08/20/2007.

- The withdrawal as attorney in this application has been accepted. Future correspondence will be mailed to the new address of record. 37 CFR 1.33.

Office of Initial Patent Examination (571) 272-4000, or 1-800-PTO-9199
OFFICE COPY

UNITED STATES PATENT AND TRADEMARK OFFICE

UNITED STATES DEPARTMENT OF COMMERCE
United States Patent and Trademark Office
Address: COMMISSIONER FOR PATENTS
P.O. Box 1450
Alexandria, Virginia 22313-1450
www.uspto.gov

APPLICATION NUMBER	FILING OR 371(c) DATE	FIRST NAMED APPLICANT	ATTY. DOCKET NO.
60/503,018	09/15/2003	Andrew Stronach	311.009US1

CONFIRMATION NO.

OC000000014430908

Mark A. Litman & Associates, P.A.
York Business Center, Suite 205
3209 West 76th St.
Edina, MN 55435

Date Mailed: 11/22/2004

DECISION DISMISSING REQUEST UNDER 37 CFR 1.53(c)(3) TO CONVERT TO NON-PROVISIONAL

This is a decision on the request under 37 CFR 1.53(c)(3) received in the U.S. Patent and Trademark Office on **09/10/2004,** to convert the above-identified application to a non-provisional application under 35 U.S.C. 111(a) and 37 CFR 1.53(b).

The request is dismissed because it does not comply with all the requirements of 37 CFR 1.53(c)(3).

A grantable request under 37 CFR 1.53(c)(3) to convert a provisional application to a non-provisional application must be accompanied by the fee set forth in 37 CFR 1.17(i) and an amendment including at least one claim if no claim is present in the provisional application and be filed prior to the earliest of: abandonment of the provisional application filed under 37 CFR 1.53(c) or expiration of twelve months after the filing date of the provisional application filed under 37 CFR 1.53(c). The present request is not grantable because:

It is not accompanied by the fee required by 37 CFR 1.17(i).

Any request for reconsideration of this decision must be filed within TWO MONTHS of the date of this decision. This time limit may NOT be extended pursuant to 37 CFR 1.136. The request must be accompanied by the items noted above.

Any inquiries related to this decision should be directed to Customer Service at (703) 308-1202.

A copy of this notice MUST be returned with the reply.

JANICE L. TIPPETT
Office of Initial Patent Examination

PART 2 - OFFICE COPY

Copied from 60503018 on 02/20/2005

UNITED STATES PATENT AND TRADEMARK OFFICE

UNITED STATES DEPARTMENT OF COMMERCE
United States Patent and Trademark Office
Address: COMMISSIONER FOR PATENTS
P.O. Box 1450
Alexandria, Virginia 22313-1450
www.uspto.gov

APPLICATION NUMBER	FILING OR 371(c) DATE	FIRST NAMED APPLICANT	ATTY. DOCKET NO.
60/503,018	09/15/2003	Andrew Stronach	311.009US1

CONFIRMATION NO.

OC000000015026243

Mark A. Litman & Associates, P.A.
York Business Center, Suite 205
3209 West 76th St.
Edina, MN 55435

Date Mailed: 01/26/2005

DECISION GRANTING REQUEST TO CONVERT TO NON-PROVISIONAL

This is a decision on the request under 37 CFR 1.53(c)(3) received in the U.S. Patent and Trademark Office on , to convert the above-identified application to a non-provisional application under 35 U.S.C. 111(a) and 37 CFR 1.53(b).

The request is granted.

The application will be processed in the Office of Initial Patent Examination (OIPE) as a non-provisional application under 35 U.S.C. 111(a) and 37 CFR 1.53(b), including the assignment of a new non-provisional application number.

The non-provisional application number is **10/895,449.** The filing receipt for the non-provisional application number will be mailed to the applicant by OIPE in due course.

JANICE L TIPPETT
Office of Initial Patent Examination
(703) 308-0910

PART 2 - OFFICE COPY

Copied from 60503018 on 02/20/2005

UNITED STATES PATENT AND TRADEMARK OFFICE

Commissioner for Patents
United States Patent and Trademark Office
P.O. Box 1450
Alexandria, VA 22313-1450
www.uspto.gov

MARK A. LITMAN & ASSOCIATES, P.A.
YORK BUSINESS CENTER, SUITE 205
3209 WEST 76TH ST.
EDINA MN 55435

COPY MAILED

SEP 14 2007

OFFICE OF PETITIONS

In re Application of	:	
STRONACH, Andrew	:	
Application No. 10/895,449	:	DECISION ON PETITION
Filed: September 15, 2003	:	TO WITHDRAW
Attorney Docket No. **311.009US1**	:	FROM RECORD
	:	

This is a decision on the Request to Withdraw as attorney or agent of record under 37 C.F.R. § 1.36(b), filed August 20, 2007.

The request is **APPROVED**.

A grantable request to withdraw as attorney/agent of record must be signed by every attorney/agent seeking to withdraw or contain a clear indication that one attorney is signing on behalf of another/others. A request to withdraw will not be approved unless at least 30 (thirty) days would remain between the date of approval and the later of the expiration date of a time to file a response or the expiration date of the maximum time period which can be extended under 37 C.F.R. § 1.136(a).

The request was signed by Mark Litman, the sole attorney of record. All attorneys/agents associated have been withdrawn. Applicant is reminded that there is no attorney of record at this time.

All future correspondence will be directed to the inventor Andrew Stronach at the address indicated below.

There is an outstanding Office action mailed July 11, 2007 that requires a reply from the applicant.

Telephone inquiries concerning this decision should be directed to Tredelle Jackson at 571-272-2783.

Monica A. Graves
Petitions Examiner
Office of Petitions

cc: **ANDREW STRONACH**
ASIP HOLDINGS, INC.
14875 BAYVIEW AVENUE
AURORA, L4G 3G8

UNITED STATES PATENT AND TRADEMARK OFFICE

UNITED STATES DEPARTMENT OF COMMERCE
United States Patent and Trademark Office
Address: COMMISSIONER FOR PATENTS
P.O. Box 1450
Alexandria, Virginia 22313-1450
www.uspto.gov

APPLICATION NUMBER	FILING OR 371(c) DATE	FIRST NAMED APPLICANT	ATTY. DOCKET NO.
60/503,160	09/15/2003	Andrew Stronach	311.013US1

CONFIRMATION NO.

OC000000014430965

Mark A. Litman & Associates, P.A.
York Business Center, Suite 205
3209 West 76th St.
Edina, MN 55435

Date Mailed: 11/22/2004

DECISION DISMISSING REQUEST UNDER 37 CFR 1.53(c)(3) TO CONVERT TO NON-PROVISIONAL

This is a decision on the request under 37 CFR 1.53(c)(3) received in the U.S. Patent and Trademark Office on **09/10/2004,** to convert the above-identified application to a non-provisional application under 35 U.S.C. 111(a) and 37 CFR 1.53(b).

The request is dismissed because it does not comply with all the requirements of 37 CFR 1.53(c)(3).

A grantable request under 37 CFR 1.53(c)(3) to convert a provisional application to a non-provisional application must be accompanied by the fee set forth in 37 CFR 1.17(i) and an amendment including at least one claim if no claim is present in the provisional application and be filed prior to the earliest of: abandonment of the provisional application filed under 37 CFR 1.53(c) or expiration of twelve months after the filing date of the provisional application filed under 37 CFR 1.53(c). The present request is not grantable because:

It is not accompanied by the fee required by 37 CFR 1.17(i).

Any request for reconsideration of this decision must be filed within TWO MONTHS of the date of this decision. This time limit may NOT be extended pursuant to 37 CFR 1.136. The request must be accompanied by the items noted above.

Any inquiries related to this decision should be directed to Customer Service at (703) 308-1202.

A copy of this notice MUST be returned with the reply.

JANICE L TIPPETT
Office of Initial Patent Examination

PART 2 - OFFICE COPY

Copied from 60503160 on 02/20/2005

UNITED STATES PATENT AND TRADEMARK OFFICE

UNITED STATES DEPARTMENT OF COMMERCE
United States Patent and Trademark Office
Address: COMMISSIONER FOR PATENTS
P.O. Box 1450
Alexandria, Virginia 22313-1450
www.uspto.gov

APPLICATION NUMBER	FILING OR 371(c) DATE	FIRST NAMED APPLICANT	ATTY. DOCKET NO.
60/503,160	09/15/2003	Andrew Stronach	311.013US1

CONFIRMATION NO.

OC000000015031865

Mark A. Litman & Associates, P.A.
York Business Center, Suite 205
3209 West 76th St.
Edina, MN 55435

Date Mailed: 01/26/2005

DECISION GRANTING REQUEST TO CONVERT TO NON-PROVISIONAL

This is a decision on the request under 37 CFR 1.53(c)(3) received in the U.S. Patent and Trademark Office on , to convert the above-identified application to a non-provisional application under 35 U.S.C. 111(a) and 37 CFR 1.53(b).

The request is granted.

The application will be processed in the Office of Initial Patent Examination (OIPE) as a non-provisional application under 35 U.S.C. 111(a) and 37 CFR 1.53(b), including the assignment of a new non-provisional application number.

The non-provisional application number is **10/895,451.** The filing receipt for the non-provisional application number will be mailed to the applicant by OIPE in due course.

JANICE L TIPPETT
Office of Initial Patent Examination
(703) 308-0910

PART 2 - OFFICE COPY

Copied from 60503160 on 02/20/2005

UNITED STATES PATENT AND TRADEMARK OFFICE

UNITED STATES DEPARTMENT OF COMMERCE
United States Patent and Trademark Office
Address: COMMISSIONER FOR PATENTS
P.O. Box 1450
Alexandria, Virginia 22313-1450
www.uspto.gov

APPLICATION NUMBER	FILING OR 371(c) DATE	FIRST NAMED APPLICANT	ATTY. DOCKET NO.
60/538,053	01/21/2004	Meihong Hu	UL001

CONFIRMATION NO.

OC000000015396691

Chiaoyun Kuo
14851 Yucca Avenue
Irvine, CA 92606

Date Mailed: 03/09/2005

DECISION GRANTING REQUEST TO CONVERT TO NON-PROVISIONAL

This is a decision on the request under 37 CFR 1.53(c)(3) received in the U.S. Patent and Trademark Office on **01/15/2005,** to convert the above-identified application to a non-provisional application under 35 U.S.C. 111(a) and 37 CFR 1.53(b).

The request is granted.

The application will be processed in the Office of Initial Patent Examination (OIPE) as a non-provisional application under 35 U.S.C. 111(a) and 37 CFR 1.53(b), including the assignment of a new non-provisional application number.

The non-provisional application number is **10/895,454.** The filing receipt for the non-provisional application number will be mailed to the applicant by OIPE in due course.

JANICE L TIRRETT
Office of Initial Patent Examination
(703) 308-0910

PART 2 - OFFICE COPY

UNITED STATES PATENT AND TRADEMARK OFFICE

UNITED STATES DEPARTMENT OF COMMERCE
United States Patent and Trademark Office
Address: COMMISSIONER FOR PATENTS
P.O. Box 1450
Alexandria, Virginia 22313-1450
www.uspto.gov

APPLICATION NUMBER	FILING OR 371(c) DATE	FIRST NAMED APPLICANT	ATTY. DOCKET NO.
60/638,103	12/23/2004	Bernard Hublot	0508-1124

CONFIRMATION NO.

OC000000015525094

00466
YOUNG & THOMPSON
745 SOUTH 23RD STREET
2ND FLOOR
ARLINGTON, VA 22202

Date Mailed: 03/21/2005

DECISION GRANTING REQUEST TO CONVERT TO NON-PROVISIONAL

This is a decision on the request under 37 CFR 1.53(c)(3) received in the U.S. Patent and Trademark Office on **01/27/2005,** to convert the above-identified application to a non-provisional application under 35 U.S.C. 111(a) and 37 CFR 1.53(b).

The request is granted.

The application will be processed in the Office of Initial Patent Examination (OIPE) as a non-provisional application under 35 U.S.C. 111(a) and 37 CFR 1.53(b), including the assignment of a new non-provisional application number.

The non-provisional application number is **10/895,455.** The filing receipt for the non-provisional application number will be mailed to the applicant by OIPE in due course.

JANICE L. TIRBETT
Office of Initial Patent Examination
(703) 308-0910

PART 2 - OFFICE COPY

Copied from 60638103 on 03/24/2005

UNITED STATES PATENT AND TRADEMARK OFFICE

UNITED STATES DEPARTMENT OF COMMERCE
United States Patent and Trademark Office
Address: COMMISSIONER FOR PATENTS
P.O. Box 1450
Alexandria, Virginia 22313-1450
www.uspto.gov

APPLICATION NUMBER	FILING OR 371(c) DATE	FIRST NAMED APPLICANT	ATTY. DOCKET NO.
60/547,435	02/26/2004	Pierre Sellier	249495US2PROV

CONFIRMATION NO.

OC000000015526292

22850
OBLON, SPIVAK, MCCLELLAND, MAIER & NEUSTADT, P.C.
1940 DUKE STREET
ALEXANDRIA, VA 22314

Date Mailed: 03/21/2005

DECISION GRANTING REQUEST TO CONVERT TO NON-PROVISIONAL

This is a decision on the request under 37 CFR 1.53(c)(3) received in the U.S. Patent and Trademark Office on **02/09/2005,** to convert the above-identified application to a non-provisional application under 35 U.S.C. 111(a) and 37 CFR 1.53(b).

The request is granted.

The application will be processed in the Office of Initial Patent Examination (OIPE) as a non-provisional application under 35 U.S.C. 111(a) and 37 CFR 1.53(b), including the assignment of a new non-provisional application number.

The non-provisional application number is **10/895,456.** The filing receipt for the non-provisional application number will be mailed to the applicant by OIPE in due course.

JANICE L TIPPETT
Office of Initial Patent Examination
(703) 308-0910

PART 2 - OFFICE COPY

Copied from 60547435 on 03/24/2005

UNITED STATES PATENT AND TRADEMARK OFFICE

UNITED STATES DEPARTMENT OF COMMERCE
United States Patent and Trademark Office
Address: COMMISSIONER FOR PATENTS
P.O. Box 1450
Alexandria, Virginia 22313-1450
www.uspto.gov

APPLICATION NUMBER	FILING OR 371(c) DATE	FIRST NAMED APPLICANT	ATTY. DOCKET NO.
60/555,863	03/24/2004	Dan Revital	91789

CONFIRMATION NO.

OC000000015531636

24628
WELSH & KATZ, LTD
120 S RIVERSIDE PLAZA
22ND FLOOR
CHICAGO, IL 60606

Date Mailed: 03/22/2005

DECISION GRANTING REQUEST TO CONVERT TO NON-PROVISIONAL

This is a decision on the request under 37 CFR 1.53(c)(3) received in the U.S. Patent and Trademark Office on **01/24/2005,** to convert the above-identified application to a non-provisional application under 35 U.S.C. 111(a) and 37 CFR 1.53(b).

The request is granted.

The application will be processed in the Office of Initial Patent Examination (OIPE) as a non-provisional application under 35 U.S.C. 111(a) and 37 CFR 1.53(b), including the assignment of a new non-provisional application number.

The non-provisional application number is **10/895,457.** The filing receipt for the non-provisional application number will be mailed to the applicant by OIPE in due course.

JANICE L TIPPETT
Office of Initial Patent Examination
(703) 308-0910

PART 2 - OFFICE COPY

Copied from 60555863 on 03/24/2005

UNITED STATES PATENT AND TRADEMARK OFFICE

UNITED STATES DEPARTMENT OF COMMERCE
United States Patent and Trademark Office
Address: COMMISSIONER FOR PATENTS
P.O. Box 1450
Alexandria, Virginia 22313-1450
www.uspto.gov

APPLICATION NUMBER	FILING OR 371(c) DATE	FIRST NAMED APPLICANT	ATTY. DOCKET NO.
60/620,301	10/20/2004	Eric Cable	04269-P0001A

CONFIRMATION NO.

OC000000015533660

24126
ST. ONGE STEWARD JOHNSTON & REENS, LLC
986 BEDFORD STREET
STAMFORD, CT 06905-5619

Date Mailed: 03/22/2005

DECISION GRANTING REQUEST TO CONVERT TO NON-PROVISIONAL

This is a decision on the request under 37 CFR 1.53(c)(3) received in the U.S. Patent and Trademark Office on **02/22/2005,** to convert the above-identified application to a non-provisional application under 35 U.S.C. 111(a) and 37 CFR 1.53(b).

The request is granted.

The application will be processed in the Office of Initial Patent Examination (OIPE) as a non-provisional application under 35 U.S.C. 111(a) and 37 CFR 1.53(b), including the assignment of a new non-provisional application number.

The non-provisional application number is **10/895,458.** The filing receipt for the non-provisional application number will be mailed to the applicant by OIPE in due course.

JANICE L TIPPETT
Office of Initial Patent Examination
(703) 308-0910

PART 1 - ATTORNEY/APPLICANT COPY

Copied from 60620301 on 03/24/2005

UNITED STATES PATENT AND TRADEMARK OFFICE

UNITED STATES DEPARTMENT OF COMMERCE
United States Patent and Trademark Office
Address: COMMISSIONER FOR PATENTS
P.O. Box 1450
Alexandria, Virginia 22313-1450
www.uspto.gov

APPLICATION NUMBER	FILING OR 371(c) DATE	FIRST NAMED APPLICANT	ATTY. DOCKET NO.
60/559,769	04/06/2004	Dan L. Dalton	200312754-1

HEWLETT-PACKARD COMPANY
Intellectual Property Administration
P.O. BOX 272400
Fort Collins, CO 80527-2400

CONFIRMATION NO.
OC000000015535809

Date Mailed: 03/22/2005

DECISION GRANTING REQUEST TO CONVERT TO NON-PROVISIONAL

This is a decision on the request under 37 CFR 1.53(c)(3) received in the U.S. Patent and Trademark Office on **02/22/2005,** to convert the above-identified application to a non-provisional application under 35 U.S.C. 111(a) and 37 CFR 1.53(b).

The request is granted.

The application will be processed in the Office of Initial Patent Examination (OIPE) as a non-provisional application under 35 U.S.C. 111(a) and 37 CFR 1.53(b), including the assignment of a new non-provisional application number.

The non-provisional application number is **10/895,459.** The filing receipt for the non-provisional application number will be mailed to the applicant by OIPE in due course.

JANICE L TIPPETT
Office of Initial Patent Examination
(703) 308-0910

PART 2 - OFFICE COPY

Copied from 60559769 on 03/24/2005

UNITED STATES PATENT AND TRADEMARK OFFICE

UNITED STATES DEPARTMENT OF COMMERCE
United States Patent and Trademark Office
Address: COMMISSIONER FOR PATENTS
P.O. Box 1450
Alexandria, Virginia 22313-1450
www.uspto.gov

APPLICATION NUMBER	FILING OR 371(c) DATE	FIRST NAMED APPLICANT	ATTY. DOCKET NO.
60/590,137	07/22/2004	Elias Gedamu	200208925-1

CONFIRMATION NO.

OC000000015536003

HEWLETT-PACKARD COMPANY
Intellectual Property Administration
P.O. Box 272400
Fort Collins, CO 80527-2400

Date Mailed: 03/22/2005

DECISION GRANTING REQUEST TO CONVERT TO NON-PROVISIONAL

This is a decision on the request under 37 CFR 1.53(c)(3) received in the U.S. Patent and Trademark Office on **02/28/2005,** to convert the above-identified application to a non-provisional application under 35 U.S.C. 111(a) and 37 CFR 1.53(b).

The request is granted.

The application will be processed in the Office of Initial Patent Examination (OIPE) as a non-provisional application under 35 U.S.C. 111(a) and 37 CFR 1.53(b), including the assignment of a new non-provisional application number.

The non-provisional application number is **10/895,460.** The filing receipt for the non-provisional application number will be mailed to the applicant by OIPE in due course.

JANICE L TIPPETT
Office of Initial Patent Examination
(703) 308-0910

PART 2 - OFFICE COPY

Copied from 60590137 on 03/24/2005

UNITED STATES PATENT AND TRADEMARK OFFICE

UNITED STATES DEPARTMENT OF COMMERCE
United States Patent and Trademark Office
Address: COMMISSIONER FOR PATENTS
P.O. Box 1450
Alexandria, Virginia 22313-1450
www.uspto.gov

APPLICATION NUMBER	FILING OR 371(c) DATE	FIRST NAMED APPLICANT	ATTY. DOCKET NO.
60/573,793	05/24/2004	Jeremy Petsinger	200311032-1

CONFIRMATION NO.

OC000000015536785

HEWLETT-PACKARD COMPANY
Intellectual Property Administration
P.O. BOX 272400
Fort Collins, CO 80527-2400

Date Mailed: 03/22/2005

DECISION GRANTING REQUEST TO CONVERT TO NON-PROVISIONAL

This is a decision on the request under 37 CFR 1.53(c)(3) received in the U.S. Patent and Trademark Office on **03/03/2005,** to convert the above-identified application to a non-provisional application under 35 U.S.C. 111(a) and 37 CFR 1.53(b).

The request is granted.

The application will be processed in the Office of Initial Patent Examination (OIPE) as a non-provisional application under 35 U.S.C. 111(a) and 37 CFR 1.53(b), including the assignment of a new non-provisional application number.

The non-provisional application number is **10/895,461.** The filing receipt for the non-provisional application number will be mailed to the applicant by OIPE in due course.

JANICE L. TIPPETT
Office of Initial Patent Examination
(703) 308-0910

PART 2 - OFFICE COPY

Copied from 60573793 on 03/24/2005

UNITED STATES PATENT AND TRADEMARK OFFICE

UNITED STATES DEPARTMENT OF COMMERCE
United States Patent and Trademark Office
Address: COMMISSIONER FOR PATENTS
P.O. Box 1450
Alexandria, Virginia 22313-1450
www.uspto.gov

APPLICATION NUMBER	FILING OR 371(c) DATE	FIRST NAMED APPLICANT	ATTY. DOCKET NO.
60/468,777	05/08/2003	Bruce C. Wasilewski	03003US

CONFIRMATION NO.

OC000000015560476

John W. Gregg
Milacron Inc
2090 Florence Avenue
Cincinnati, OH 45206

Date Mailed: 03/24/2005

DECISION GRANTING REQUEST TO CONVERT TO NON-PROVISIONAL

This is a decision on the request under 37 CFR 1.53(c)(3) received in the U.S. Patent and Trademark Office on **03/22/2004,** to convert the above-identified application to a non-provisional application under 35 U.S.C. 111(a) and 37 CFR 1.53(b).

The request is granted.

The application will be processed in the Office of Initial Patent Examination (OIPE) as a non-provisional application under 35 U.S.C. 111(a) and 37 CFR 1.53(b), including the assignment of a new non-provisional application number.

The non-provisional application number is **10/895,462.** The filing receipt for the non-provisional application number will be mailed to the applicant by OIPE in due course.

JANICE L TIPPETT
Office of Initial Patent Examination
(703) 308-0910

PART 2 - OFFICE COPY

UNITED STATES PATENT AND TRADEMARK OFFICE

UNITED STATES DEPARTMENT OF COMMERCE
United States Patent and Trademark Office
Address: COMMISSIONER FOR PATENTS
P.O. Box 1450
Alexandria, Virginia 22313-1450
www.uspto.gov

APPLICATION NUMBER	FILING OR 371(c) DATE	FIRST NAMED APPLICANT	ATTY. DOCKET NO.
60/590,243	07/22/2004	Elias Gedamu	200208657-1

CONFIRMATION NO.

OC000000015587604

HEWLETT-PACKARD COMPANY
Intellectual Property Administration
P.O. BOX 272400
Fort Collins, CO 80527-2400

Date Mailed: 03/29/2005

DECISION GRANTING REQUEST TO CONVERT TO NON-PROVISIONAL

This is a decision on the request under 37 CFR 1.53(c)(3) received in the U.S. Patent and Trademark Office on **02/25/2005,** to convert the above-identified application to a non-provisional application under 35 U.S.C. 111(a) and 37 CFR 1.53(b).

The request is granted.

The application will be processed in the Office of Initial Patent Examination (OIPE) as a non-provisional application under 35 U.S.C. 111(a) and 37 CFR 1.53(b), including the assignment of a new non-provisional application number.

The non-provisional application number is **10/895,463.** The filing receipt for the non-provisional application number will be mailed to the applicant by OIPE in due course.

JANICE L TIPPENT
Office of Initial Patent Examination
(703) 308-0910

PART 2 - OFFICE COPY

Copied from 60590243 on 03/31/2005

UNITED STATES PATENT AND TRADEMARK OFFICE

UNITED STATES DEPARTMENT OF COMMERCE
United States Patent and Trademark Office
Address: COMMISSIONER FOR PATENTS
P.O. Box 1450
Alexandria, Virginia 22313-1450
www.uspto.gov

APPLICATION NUMBER	FILING OR 371(c) DATE	FIRST NAMED APPLICANT	ATTY. DOCKET NO.
60/590,574	07/22/2004	Elias Gedamu	200208650-1

CONFIRMATION NO.

OC000000015593332

HEWLETT-PACKARD COMPANY
Intellectual Property Administration
P.O. BOX 272400
Fort Collins, CO 80527-2400

Date Mailed: 03/29/2005

DECISION GRANTING REQUEST TO CONVERT TO NON-PROVISIONAL

This is a decision on the request under 37 CFR 1.53(c)(3) received in the U.S. Patent and Trademark Office on **03/01/2005,** to convert the above-identified application to a non-provisional application under 35 U.S.C. 111(a) and 37 CFR 1.53(b).

The request is granted.

The application will be processed in the Office of Initial Patent Examination (OIPE) as a non-provisional application under 35 U.S.C. 111(a) and 37 CFR 1.53(b), including the assignment of a new non-provisional application number.

The non-provisional application number is **10/895,464.** The filing receipt for the non-provisional application number will be mailed to the applicant by OIPE in due course.

JANICE L. TIPPETT
Office of Initial Patent Examination
(703) 308-0910

PART 2 - OFFICE COPY

Copied from 60590574 on 04/14/2005

UNITED STATES PATENT AND TRADEMARK OFFICE

UNITED STATES DEPARTMENT OF COMMERCE
United States Patent and Trademark Office
Address: COMMISSIONER FOR PATENTS
P.O. Box 1450
Alexandria, Virginia 22313-1450
www.uspto.gov

APPLICATION NUMBER	FILING OR 371(c) DATE	FIRST NAMED APPLICANT	ATTY. DOCKET NO.
60/550,936	03/05/2004	Robert J. Gyurik	51950-9

CONFIRMATION NO.

OC000000015593638

27162
CARELLA, BYRNE, BAIN, GILFILLAN, CECCHI,
STEWART & OLSTEIN
5 BECKER FARM ROAD
ROSELAND, NJ 07068

Date Mailed: 03/29/2005

DECISION GRANTING REQUEST TO CONVERT TO NON-PROVISIONAL

This is a decision on the request under 37 CFR 1.53(c)(3) received in the U.S. Patent and Trademark Office on **03/07/2005,** to convert the above-identified application to a non-provisional application under 35 U.S.C. 111(a) and 37 CFR 1.53(b).

The request is granted.

The application will be processed in the Office of Initial Patent Examination (OIPE) as a non-provisional application under 35 U.S.C. 111(a) and 37 CFR 1.53(b), including the assignment of a new non-provisional application number.

The non-provisional application number is **10/895,465.** The filing receipt for the non-provisional application number will be mailed to the applicant by OIPE in due course.

JANICE L TIPPETT
Office of Initial Patent Examination
(703) 308-0910

PART 2 - OFFICE COPY

Copied from 60550936 on 04/18/2005

SPE RESPONSE FOR CERTIFICATE OF CORRECTION

Paper No.: _____

DATE : 10/18/06

TO SPE OF : ART UNIT 2813

SUBJECT : Request for Certificate of Correction on Patent No.: 6977221

A response is requested with respect to the accompanying request for a certificate of correction.

Please complete this form and return with file, within 7 days to:
Palm location **7580, Certificates of Correction Branch – South Tower – 9A22**
If response is for an IFW, **return to employee (named below) via PUBSCofC Team in MADRAS.**
With respect to the change(s) requested, correcting Office and/or Applicant's errors, should the patent read as shown in the certificate of correction (COCIN)? No new matter should be introduced, nor should the scope or meaning of the claims be changed.

Valerie Jackson

Thank You For Your Assistance

Certificates of Correction Branch
Tel. No. 703-308-9390 ext. 114

The request for issuing the above-identified correction(s) is hereby:
Note your decision on the appropriate box.

- ☑ **Approved** — **All** changes apply.
- ☐ **Approved in Part** — Specify below which changes **do not** apply.
- ☐ **Denied** — State the reasons for denial below.

Comments:

Carl Whitehead

CARL WHITEHEAD, JR.
SUPERVISORY PATENT EXAMINER
TECHNOLOGY CENTER 2800
SPE

2813
Art Unit

UNITED STATES PATENT AND TRADEMARK OFFICE

CERTIFICATE OF CORRECTION

PATENT NO. :6,977,221 B2

DATED :December 20, 2005

INVENTOR(S) :Sandhu et al.

It is certified that errors appear in the above-identified patent and that said Letters Patent is hereby corrected as shown below:

Foreign Patent Documents – Replace "JP 8-139036 5/1996" with --JP 8-139056 5/1996--.

Column 2, Line 36 – After "accordance" insert --with--.

Column 8, line 35 – Replace "750°" with --750° C--.

Mailing Address of Sender:
Wells St. John P.S.
601 West First Avenue, Suite 1300
Spokane, WA 99201-3828

Patent No. 6,977,221 B2

UNITED STATES PATENT AND TRADEMARK OFFICE

UNITED STATES DEPARTMENT OF COMMERCE
United States Patent and Trademark Office
Address: COMMISSIONER FOR PATENTS
P.O. Box 1450
Alexandria, Virginia 22313-1450
www.uspto.gov

APPLICATION NO.	FILING DATE	FIRST NAMED INVENTOR	ATTORNEY DOCKET NO.	CONFIRMATION NO.
10/895,486	07/21/2004	Lionel Kyriakides	200315039-2	8067

7590 04/22/2008
HEWLETT PACKARD COMPANY
P O BOX 272400, 3404 E. HARMONY ROAD
INTELLECTUAL PROPERTY ADMINISTRATION
FORT COLLINS, CO 80527-2400

EXAMINER
MITCHELL, JASON D

ART UNIT	PAPER NUMBER
2193	

NOTIFICATION DATE	DELIVERY MODE
04/22/2008	ELECTRONIC

DECISION DISMISSING PETITION UNDER 37 CFR 1.138(d)

The declaration of express abandonment will not be recognized

This is in response to the petition under 37 CFR 1.138(d), requesting for a refund of any previously paid search fee and excess claims fee in the above-identified application.

The petition is dismissed.

The express abandonment will **not** be recognized for the reason(s) indicated below:

1. ☒ The petition was not filed in sufficient time to permit the appropriate officials to recognize the abandonment before an examination has been made of the application. See 37 CFR 1.138(d).

2. ☐ The petition was not signed by a party authorized by 37 CFR 1.33(b)(1), (3) or (4).

3. ☐ The application is not an application filed under 35 U.S.C. 111(a) on or after December 8, 2004.

4. ☐ The petition for express abandonment under 1.138(d) is dismissed because the applicant did not pay any search fee and excess claims fees in the above-identified application.

Telephone inquiries should be directed to the Office of Data Management at (571) 272-4200.

Patent Publication Branch
Office of Data Management

FORM PET651D (Rev. 08/07)

UNITED STATES PATENT AND TRADEMARK OFFICE

UNITED STATES DEPARTMENT OF COMMERCE
United States Patent and Trademark Office
Address: COMMISSIONER FOR PATENTS
P.O. Box 1450
Alexandria, Virginia 22313-1450
www.uspto.gov

CROMPTON, SEAGER & TUFTE, LLC
1221 NICOLLET AVENUE
SUITE 800
MINNEAPOLIS, MN 55403-2420

Mail Date: 04/21/2010

Applicant	: Masaya Ichimura	: DECISION ON REQUEST FOR
Patent Number	: 7641944	: RECALCULATION of PATENT
Issue Date	: 01/05/2010	: TERM ADJUSTMENT IN VIEW
Appliction No	: 10/895,498	: OF WYETH AND NOTICE OF INTENT TO
Filed	: 07/21/2004	: ISSUE CERTIFICATE OF CORRECTION
		:

The Request for Recalculation is **GRANTED** to the extent indicated.

The patent term adjustment has been determined to be **1001** days. The USPTO will *sua sponte* issue a certificate of correction reflecting the amount of PTA days determined by the recalculation.

Prior to the issuance of the certificate of correction, the USPTO will afford patentee an opportunity to be heard and request reconsideration. Accordingly, patentee has **one month or thirty (30) days**, whichever is longer, to file a request for reconsideration of this patent term adjustment calculation. See 35 U.S.C. 154(b)(3)(B)(ii) and 37 CFR 1.322(a)(4). No extensions of time will be granted under 37 CFR 1.136.

Patentee should use document code PET.OP if electronically filing a request for reconsideration of this patent term adjustment calculation. The patentee must also include the information required by 37 CFR 1.705(b)(2) and the fee required by 37 CFR 1.18(e). If patentee does not file a timely request for reconsideration of this patent term adjustment calculation including the information required by 37 CFR 1.705(b)(2) and the fee required by 37 CFR 1.18(e), the USPTO will issue a certificate of correction reflecting the PTA determination noted above.

Patentee should be aware that in order to preserve the right to review in the United States District Court for the District of Columbia of the USPTO patent term adjustment determination, patentee must ensure that he or she also take the steps required under 35 U.S.C. 154(b)(4)(A) in a timely manner. Nothing in the request for recalculation should be construed as providing an alternative time frame for commencing a civil action under 35 U.S.C. 154(b)(4)(A).

Any questions concerning this decision should be directed to the Office of Patent Legal Administration at 571-272-7702.

UNITED STATES PATENT AND TRADEMARK OFFICE

Commissioner for Patents
United States Patent and Trademark Office
P.O. Box 1450
Alexandria, VA 22313-1450
www.uspto.gov

MAILED
FROM DIRECTORS OFFICE

MAY 05 2006

TECHNOLOGY CENTER 3600

In re Patent No. EVANS ET AL.
Issue Date: February 14, 2006
Appl No.: 10/895,500
Filed: July 21, 2004
For: INTEGRATED BUMPER ENERGY ABSORBER AND FASCIA SUPPORT COMPONENT

DECISION GRANTING PETITION
37 CFR 1.324

This is a decision on the petition filed February 13, 2006 to correct inventorship under 37 CFR 1.324.

The petition is granted.

The patented file is being forwarded to Certificate of Corrections Branch for issuance of a certificate naming only the actual inventor or inventors.

D. Glenn Dayoan
Supervisory Patent Examiner
Art Unit 3612
Technology Center 3600

PRICE HENEVELD COOPER DEWITT & LITTON, LLP
695 KENMOOR, S.E.
P O BOX 2567
GRAND RAPIDS, MI 49501

SPE RESPONSE FOR CERTIFICATE OF CORRECTION

Paper No.: _____

DATE : 06/11/09

TO SPE OF : ART UNIT 3617

SUBJECT : Request for Certificate of Correction for Appl. No.: 10/895,515 Patent No.: 7,361,070

Please respond to this request for a certificate of correction within 7 days.

FOR IFW FILES:

Please review the requested changes/corrections as shown in the **COCIN** document(s) in the IFW application image. No new matter should be introduced, nor should the scope or meaning of the claims be changed.

Please complete the response (see below) and forward the completed response to scanning using document code **COCX**.

FOR PAPER FILES:

Please review the requested changes/corrections as shown in the attached certificate of correction. Please complete this form (see below) and forward it with the file to:

Certificates of Correction Branch (CofC)

Randolph Square
Palm Location 7580

Should the changes be made **Valerie Jackson** **Certificates of Correction Branch**

703-756-1573

Thank You For Your Assistance

The request for issuing the above-identified correction(s) is hereby:
Note your decision on the appropriate box.

- ☒ **Approved** — **All** changes apply.
- ☐ **Approved in Part** — Specify below which changes **do not** apply.
- ☐ **Denied** — State the reasons for denial below.

Comments: _____

_____

_____

_____

_____

SPE

3617
Art Unit

UNITED STATES PATENT AND TRADEMARK OFFICE

UNITED STATES DEPARTMENT OF COMMERCE
United States Patent and Trademark Office
Address: COMMISSIONER FOR PATENTS
P.O. Box 1450
Alexandria, Virginia 22313-1450
www.uspto.gov

K&L Gates LLP
P.O. Box 1135
CHICAGO, IL 60690

Mail Date: 04/20/2010

Applicant	: Franco Crivelli	: DECISION ON REQUEST FOR
Patent Number	: 7597619	: RECALCULATION of PATENT
Issue Date	: 10/06/2009	: TERM ADJUSTMENT IN VIEW
Appliction No	: 10/895,521	: OF WYETH AND NOTICE OF INTENT TO
Filed	: 07/21/2004	: ISSUE CERTIFICATE OF CORRECTION
		:

The Request for Recalculation is **GRANTED** to the extent indicated.

The patent term adjustment has been determined to be **1300** days. The USPTO will *sua sponte* issue a certificate of correction reflecting the amount of PTA days determined by the recalculation.

Prior to the issuance of the certificate of correction, the USPTO will afford patentee an opportunity to be heard and request reconsideration. Accordingly, patentee has **one month or thirty (30) days**, whichever is longer, to file a request for reconsideration of this patent term adjustment calculation. See 35 U.S.C. 154(b)(3)(B)(ii) and 37 CFR 1.322(a)(4). No extensions of time will be granted under 37 CFR 1.136.

Patentee should use document code PET.OP if electronically filing a request for reconsideration of this patent term adjustment calculation. The patentee must also include the information required by 37 CFR 1.705(b)(2) and the fee required by 37 CFR 1.18(e). If patentee does not file a timely request for reconsideration of this patent term adjustment calculation including the information required by 37 CFR 1.705(b)(2) and the fee required by 37 CFR 1.18(e), the USPTO will issue a certificate of correction reflecting the PTA determination noted above.

Patentee should be aware that in order to preserve the right to review in the United States District Court for the District of Columbia of the USPTO patent term adjustment determination, patentee must ensure that he or she also take the steps required under 35 U.S.C. 154(b)(4)(A) in a timely manner. Nothing in the request for recalculation should be construed as providing an alternative time frame for commencing a civil action under 35 U.S.C. 154(b)(4)(A).

Any questions concerning this decision should be directed to the Office of Patent Legal Administration at 571-272-7702.

UNITED STATES PATENT AND TRADEMARK OFFICE

Commissioner for Patents
United States Patent and Trademark Office
P.O. Box 1450
Alexandria, VA 22313-1450
www.uspto.gov

In re Application of
Gerald M. Clum

Application No. 10895536

Filed: July 21,2004

Attorney Docket No. GEC1.002

:DECISION ON PETITION TO MAKE SPECIAL
:UNDER 37 CFR 1.102(c)(1)

This is a decision on the electronic petition under 37 CFR 1.102 (c)(1), filed 30-OCT-2009 to make the above-identified application special based on applicant's age as set forth in MPEP § 708.02, Section IV.

The petition is **GRANTED**.

A grantable petition to make an application special under 37 CFR 1.102(c)(1), MPEP § 708.02, Section IV: Applicant's Age must include a statement by applicant or a registered practitioner having evidence that applicant is at least 65 years of age. No fee is required.

Accordingly, the above-identified application has been accorded "special" status and will be taken up for action by the examiner upon the completion of all pre-examination processing.

Telephone inquiries concerning this electronic decision should be directed to the Electronic Business Center at 866-217-9197.

All other inquiries concerning either the examination or status of the application should be directed to the Technology Center.

SPE RESPONSE FOR CERTIFICATE OF CORRECTION

DATE : 10-14-07

Paper No.: _____

TO SPE OF : **Technology Center** 1642

10/895545

SUBJECT : Request for Certificate of Correction on Patent No.: 7258983 B2

A response is requested with respect to the accompanying request for a certificate of correction.

Please complete this form and return with file, within 7 days to:

Palm location **7580, Certificates of Correction Branch – South Tower – 9A22**

If response is for an IFW, **return to employee (named below) via PUBSCofC Team in MADRAS.**

With respect to the change(s) requested, correcting Office and/or Applicant's errors, should the patent read as shown in the certificate of correction (COCIN)? No new matter should be introduced, nor should the scope or meaning of the claims be changed.

Thank You For Your Assistance

Elisha Evans

Certificates of Correction Branch

Tel. No. 703-308-9390 EXT 110

The request for issuing the above-identified correction(s) is hereby:

Note your decision on the appropriate box.

- [x] **Approved** — **All** changes apply.
- [ ] **Approved in Part** — Specify below which changes **do not** apply.
- [ ] **Denied** — State the reasons for denial below.

Comments:

LARRY R. HELMS, PH.D.
SUPERVISORY PATENT EXAMINER

SPE

1642

Art Unit

UNITED STATES PATENT AND TRADEMARK OFFICE

Commissioner for Patents
United States Patent and Trademark Office
P.O. Box 1450
Alexandria, VA 22313-1450
www.uspto.gov

MCANDREWS HELD & MALLOY, LTD
500 WEST MADISON STREET
SUITE 3400
CHICAGO, IL 60661

COPY MAILED
DEC 08 2008
OFFICE OF PETITIONS

In re Application of :
Carr et al. :
Application No. 10/895,551 : DECISION ON PETITION
Filed: July 20, 2004 :
Attorney Docket No. 13543US02 :

This is a decision on the petition, filed November 17, 2008, which is being treated as a petition under 37 CFR 1.181 (no fee) requesting withdrawal of the holding of abandonment in the above-identified application.

The petition is **GRANTED**.

This application was held abandoned for failure to timely pay the issue and publication fees on or before September 16, 2008, as required by the Notice of Allowance and Fee(s) Due (Notice), mailed June 16, 2008.

Petitioner asserts that the Notice of Allowance and Notice of Allowability dated June 16, 2008 were not received.

A review of the written record indicates an irregularity in the mailing of the Notice of Allowance dated June 16, 2008. In this regard, the correspondence address of record was changed to the address associated with customer number 20427 on June 5, 2008. Office records show a request to change the address cannot be located. Accordingly, as the Notice of Allowance and Notice of Allowability were mailed to an incorrect address, the Notice of Abandonment mailed October 14, 2008 is hereby vacated and the holding of abandonment withdrawn.

This application is being referred to the Technology Center technical support staff of Art Unit 2134 for remailing the Notice of Allowance and Notice of Allowability of June 16, 2008 and resetting the period for reply.

Charlema Grant
Petitions Attorney
Office of Petitions

UNITED STATES PATENT AND TRADEMARK OFFICE

Commissioner for Patents
United States Patent and Trademark Office
P.O. Box 1450
Alexandria, VA 22313-1450
www.uspto.gov

VISTEON
C/O BRINKS HOFER GILSON & LIONE
PO BOX 10395
CHICAGO IL 60610

COPY MAILED

MAY 0 9 2008

OFFICE OF PETITIONS

In re Application of

Neet, et al.

Application No. 10/895,567

Filed: July 21, 2004

Attorney Docket No. 10541-1954

DECISION ON PETITION

This is a decision on the petition under 37 CFR 1.181(a) to withdraw the holding of abandonment, filed March 10, 2008.

The petition under 37 CFR 1.181(a) to withdraw the holding of abandonment is **granted**.

This application was held abandoned on December 1, 2007, after it was believed that corrected drawings were not filed in response to the Notice of Allowability mailed August 30, 2007. A Notice of Abandonment was mailed on January 7, 2008, indicating that corrected drawings were not received.

The instant petition maintains that corrected drawings were timely filed on November 7, 2007, however; the drawings cited an incorrect application serial number. A review of application serial number 10/985,567 reveals that the corrected drawings that should have been filed in the subject application were of record on November 13, 2007. The evidence is convincing that corrected drawings were timely received, albeit having been routed to the incorrect application. Because a response was filed with the Office prior to the expiration of the period for reply, the petition is granted and the holding of abandonment withdrawn.

The application file is being forwarded to the Office of Data Managment for further processing.

Questions regarding this decision may be directed to the undersigned at (571) 272-3222.

Kenya A. McLaughlin
Petitions Attorney
Office of Petitions

UNITED STATES PATENT AND TRADEMARK OFFICE

Commissioner for Patents
United States Patent and Trademark Office
P.O. Box 1450
Alexandria, VA 22313-1450
www.uspto.gov

BROOKS KUSHMAN P.C. / LEAR CORPORATION
1000 TOWN CENTER
TWENTY-SECOND FLOOR
SOUTHFIELD MI 48075-1238

COPY MAILED

FEB 1 0 2005

OFFICE OF PETITIONS

In re Application of	:
George B. Byma et al.	:
Application No. 10/895,571	: DECISION ACCORDING STATUS
Filed: July 21, 2004	: UNDER 37 CFR 1.47(a)
Attorney Docket No. LEAR 04679 PUS	:

This is in response to the petition filed December 13, 2004 under 37 CFR 1.47(a).

The petition is **DISMISSED**.

Rule 47 applicant is given TWO MONTHS from the mailing date of this decision to respond, correcting the below-noted deficiencies. Any response should be entitled "Request for Reconsideration of Petition Under 37 CFR 1.47(a)" and may include an oath or declaration executed by the inventor. **Failure to respond will result in abandonment of the application.** Any extensions of time will be governed by 37 CFR 1.136(a).

The above-identified application was filed on July 21, 2004, naming George B. Byma, Grant Colman, Yu-Jin J. Song and Te Phan as joint inventors but without a signed declaration. Accordingly, on September 14, 2004, a "Notice To File Missing Parts of Application" was mailed, requiring *inter alia* a properly executed oath or declaration.

In response, the instant petition under 37 CFR 1.47(a), an oath or declaration executed only by joint inventors Byma, Colman and Song and the late filing surcharge were filed. The petition argues that joint inventor Phan refuses to sign the oath or declaration and thus by his actions, to cooperate with the filing of the instant application.

A grantable petition under 37 CFR 1.47(a) requires: (1) proof that the non-signing inventor cannot be reached or refuses to sign the oath or declaration after having been presented with the application papers (specification, claims and drawings); (2) an acceptable oath or declaration in compliance with 35 U.S.C. §§ 115 and 116; (3) the petition fee; and (4) a statement of the last known address of the non-signing inventor.

The present petition lacks items (4).

In regards to item (4), the last known addresses of joint inventor Te Phan has not been provided as required by 37 CFR 1.47. Petitioners must provide a statement of the last known address of the nonsigning inventor. That address should be the last known address at which the inventors customarily receive mail. Ordinarily, the last known address will be the last known residence of the nonsigning inventor. While Internet searches and directory assistance inquiries show diligent efforts, diligent efforts to locate a non-signing inventor should at least start with the last known address of the non signing inventor.

Status under 37 CFR 1.47(a) cannot be accorded this application until such time as efforts to reach Mr. Phan have been attempted at the last known address and the last known address has been provided with a request for reconsideration.

Further correspondence with respect to this matter should be addressed as follows:

By mail: Mail Stop Petition
P.O. Box 1450
Alexandria, VA 22313-1450

By FAX: (703) 872-9306

Telephone inquiries concerning this matter may be directed to the undersigned Petitions Attorney at (571) 272-3212.

Patricia Faison-Ball

Patricia Faison-Ball
Senior Petitions Attorney
Office of Petitions

UNITED STATES PATENT AND TRADEMARK OFFICE

Commissioner for Patents
United States Patent and Trademark Office
P.O. Box 1450
Alexandria, VA 22313-1450
www.uspto.gov

BROOKS KUSHMAN P.C. / LEAR CORPORATION
1000 TOWN CENTER
TWENTY-SECOND FLOOR
SOUTHFIELD MI 48075-1238

COPY MAILED

APR 06 2005

OFFICE OF PETITIONS

In re Application of	:
George B. Byma et al.	:
Application No. 10/895,571	: DECISION ACCORDING STATUS
Filed: July 21, 2004	: UNDER 37 CFR 1.47(a)
Attorney Docket No. LEAR 04679 PUS	:

This is in response to the renewed petition filed under 37 CFR 1.47(a) on February 25, 2005.

The petition is GRANTED.

The above-identified application was filed on July 21, 2004, naming George B. Byma, Grant Colman, Yu-Jin J. Song and Te Phan as joint inventors but without a signed declaration. Accordingly, on September 14, 2004, a "Notice To File Missing Parts of Application" was mailed, requiring *inter alia* a properly executed oath or declaration. A two month period for reply was set. In response, on December 13, 2004, a petition under 37 CFR 1.47(a), an oath or declaration executed only by joint inventors Byma, Colman and Song and the late filing surcharge were filed. The petition argues that joint inventor Phan refuses to sign the oath or declaration and thus by his actions, to cooperate with the filing of the instant application. The petition was dismissed in a decision mailed February 10, 2005 because the last known address of Mr. Phan had not been provided.

A grantable petition under 37 CFR 1.47(a) requires: (1) proof that the non-signing inventor cannot be reached or refuses to sign the oath or declaration after having been presented with the application papers (specification, claims and drawings); (2) an acceptable oath or declaration in compliance with 35 U.S.C. §§ 115 and 116; (3) the petition fee; and (4) a statement of the last known address of the non-signing inventor. The above-identified application and papers have been reviewed and found in compliance with 37 CFR 1.47(a). In view thereof, this application is hereby accorded Rule 1.47(a) status.

In response to the decision dismissing the petition filed February 10, 2005, a statement regarding the last known address has been provided.

Thus, as provided in Rule 1.47(c), this Office will forward notice of this application's filing to the non-signing inventors at the address given in the petition. Notice of the filing of this application will also be published in the Official Gazette.

This application will be forwarded to Technology Center 2875 for further examination.

Telephone inquiries concerning this matter may be directed to the undersigned Petitions Attorney at (571) 272-3212.

Patricia Faison-Ball

Patricia Faison-Ball
Senior Petitions Attorney
Office of Petitions

UNITED STATES PATENT AND TRADEMARK OFFICE

Commissioner for Patents
United States Patent and Trademark Office
P.O. Box 1450
Alexandria, VA 22313-1450
www.uspto.gov

TE PHAN
3704 CLOVERLAWN
YPSILANTI, MI 48197

COPY MAILED

APR 06 2005

OFFICE OF PETITIONS

In re Application of
George B. Byma et al.
Application No. 10/895,571
Filed: July 21, 2004
For: OVERHEAD CONSOLE ASSEMBLY

Dear Mr. Phan:

You are named as the sole inventor in the above identified United States patent application, filed under the provisions of 35 U.S.C. 116 (United States Code), and 37 CFR 1.47(a), Rules of Practice in Patent Cases. Should a patent be granted on the application you will be designated therein as the sole inventor.

As the named inventor you are entitled to inspect any paper in the file wrapper of the application, order copies of all or any part thereof (at a prepaid cost per 37 CFR 1.19) or make your position of record in the application. Alternatively, you may arrange to do any of the preceding through a registered patent attorney or agent presenting written authorization from you. If you care to join the application, counsel of record (see below) would presumably assist you. Joining in the application would entail the filing of an appropriate oath or declaration by you pursuant to 37 CFR 1.63.

Telephone inquiries regarding this communication should be directed to the undersigned Petitions Attorney at (571) 272-3212. Requests for information regarding your application should be directed to the File Information Unit at 703/308-2733. Information regarding how to pay for and order a copy of the application, or a specific paper in the application, should be directed to Certification Division at 703/308-9726 or 1-800-972-6382 (outside the Washington D.C. area).

Patricia Faison-Ball

Patricia Faison-Ball
Senior Petitions Attorney
Office of Petitions

cc:
BROOKS KUSHMAN P.C. / LEAR CORPORATION
1000 TOWN CENTER
TWENTY-SECOND FLOOR
SOUTHFIELD MI 48075-1238

UNITED STATES PATENT AND TRADEMARK OFFICE

Commissioner for Patents
United States Patent and Trademark Office
P.O. Box 1450
Alexandria, VA 22313-1450
www.uspto.gov

JOHN S. BEULICK (12729)
C/O ARMSTRONG TEASDALE LLP
ONE METROPOLITAN SQUARE
SUITE 2600
ST. LOUIS MO 63102-2740

COPY MAILED

APR 27 2006

OFFICE OF PETITIONS

In re Application of	:	
John Leslie Henry	:	
Application No. 10/895,585	:	ON PETITION
Filed: July 21, 2004	:	
Attorney Docket No. 145502	:	

This is a decision on the petition, filed April 19, 2006, under 37 CFR 1.313(c)(2) to withdraw the above-identified application from issue after payment of the issue fee.

The petition is **GRANTED**.

The above-identified application is withdrawn from issue for consideration of a submission under 37 CFR 1.114 (request for continued examination). See 37 CFR 1.313(c)(2).

Petitioner is advised that the issue fee paid on October 31, 2005, in the above-identified application cannot be refunded. If, however, the above-identified application is again allowed, petitioner may request that it be applied towards the issue fee required by the new Notice of Allowance.[1]

Telephone inquiries should be directed to the undersigned at (571) 272-3208.

The examiner of Technology Center AU 3746 will consider the request for continued examination under 37 CFR 1.114.

Karen Creasy
Petitions Examiner
Office of Petitions

---

[1] The request to apply the issue fee to the new Notice may be satisfied by completing and returning the new Issue Fee Transmittal Form PTOL-85(b), which includes the following language thereon: "Commissioner for Patents is requested to apply the Issue Fee and Publication Fee (if any) or re-apply any previously paid issue fee to the application identified above." Petitioner is advised that, whether a fee is indicated as being due or not, the Issue Fee Transmittal Form **must** be completed and timely submitted to avoid abandonment. Note the language in bold text on the first page of the Notice of Allowance and Fee(s) Due (PTOL-85).

UNITED STATES PATENT AND TRADEMARK OFFICE

Commissioner for Patents
United States Patent and Trademark Office
P.O. Box 1450
Alexandria, VA 22313-1450
www.uspto.gov

COPY MAILED

SEP 25 2006

OFFICE OF PETITIONS

BLAKELY SOKOLOFF TAYLOR & ZAFMAN
12400 WILSHIRE BOULEVARD, 7th FLOOR
LOS ANGELES, CA 90025-1030

In re Application of

FEINLEIB, et al.
Application No. 10/895,587
Filed: July 21, 2004
Attorney Docket No. 007097.P006

DECISION ON PETITION
TO WITHDRAW
FROM RECORD

This is a decision on the Request to Withdraw as attorney or agent of record under 37 C.F.R. § 1.36(b), filed May 19, 2006.

The request is **NOT APPROVED**.

A grantable request to withdraw as attorney/agent of record must be signed by every attorney/agent seeking to withdraw or contain a clear indication that one attorney is signing on behalf of another/others. A request to withdraw will not be approved unless at least 30 (thirty) days would remain between the date of approval and the later of the expiration date of a time to file a response or the expiration date of the maximum time period which can be extended under 37 C.F.R. § 1.136(a).

The request cannot be approved because there remains less than 30 (thirty days) between the date of this decision and the maximum extendable time period for filing a response to the Office action mailed on April 17, 2006. Also, the request cannot be approved because no reason for withdrawal has been provided. The Office cannot, at this time, determine whether practitioner's request is one of the mandatory or permissive reasons enumerated in 37 CFR 10.40. Any subsequent requests must include reasons for withdrawal. Please note that there is a space provided for on PTO/SB/83 (Request to Withdraw as Attorney or Agent) to supply practitioner's reasons.

All future communications from the Office will continue to be directed to the above-listed address until otherwise notified by applicant.

Telephone inquiries concerning this decision should be directed to Monica A. Graves at 571-272-7253.

Amelia Au
Petitions Examiner
Office of Petitions

cc: **David A. Feinleib**
949 Scott Street
Palo Alto, CA 94301

UNITED STATES PATENT AND TRADEMARK OFFICE

Commissioner for Patents
United States Patent and Trademark Office
P.O. Box 1450
Alexandria, VA 22313-1450
www.uspto.gov

COPY MAILED

JAN 25 2007

OFFICE OF PETITIONS

BLAKELY SOKOLOFF TAYLOR & ZAFMAN
12400 WILSHIRE BOULEVARD, 7TH FLOOR
LOS ANGELES CA 90025-1030

In re Application of
FEINLEIB, et al.
Application No. 10/895,587
Filed: July 21, 2004
Attorney Docket No. 7097.P006

DECISION ON PETITION TO WITHDRAW FROM RECORD

This is a decision on the renewed Request to Withdraw as attorney or agent of record under 37 C.F.R. § 1.36(b), filed November 13, 2006.

The request is **APPROVED**.

A grantable request to withdraw as attorney/agent of record must be signed by every attorney/agent seeking to withdraw or contain a clear indication that one attorney is signing on behalf of another/others. A request to withdraw will not be approved unless at least 30 (thirty) days would remain between the date of approval and the later of the expiration date of a time to file a response or the expiration date of the maximum time period which can be extended under 37 C.F.R. § 1.136(a).

The request was signed by James Y. Go on behalf of all attorneys of record who are associated with customer No. 08791. All attorneys/agents associated with the Customer Number 08791 have been withdrawn. Applicant is reminded that there is no attorney of record at this time.

All future correspondence will be directed to the first named inventor David A. Feinleib at the address indicated below.

There is an outstanding Office action mailed October 6, 2006 that requires a reply from the applicant.

Telephone inquiries concerning this decision should be directed to the undersigned at 571-272-7253.

Monica A. Graves
Petitions Examiner
Office of Petitions

cc: **DAVID A. FEINLEIB**
949 SCOTT STREET
PALO ALTO, CA 94301

UNITED STATES PATENT AND TRADEMARK OFFICE

COMMISSIONER FOR PATENTS
UNITED STATES PATENT AND TRADEMARK OFFICE
P.O. BOX 1450
ALEXANDRIA, VA 22313-1450
www.uspto.gov

Paper No.

BRINKS HOFER GILSON & LIONE
P.O. BOX 10395
CHICAGO IL 60610

COPY MAILED

OCT 0 1 2008

OFFICE OF PETITIONS

In re Application of	:	
Wood et al.	:	DECISION ON
Application No. 10/895,596	:	APPLICATION FOR
Filed: 07/21/2004	:	PATENT TERM ADJUSTMENT
Attorney Docket No.	:	
10743-24	:	

This is a decision on the "APPLICATION FOR CORRECTION OF PATENT TERM ADJUSTMENT UNDER 37 C.F.R. § 1.705(b)" filed on February 19, 2008. Applicants request that the Patent Term Adjustment for the above-identified patent be corrected from zero (0) days to nine (9) days.

The application for patent term adjustment is **GRANTED to the extent indicated herein**.

The Office has updated the PALM screen to reflect that the correct Patent Term Adjustment (PTA) determination at the time of the mailing of the Notice of Allowance is SEVENTY-TWO (72) days. A copy of the updated PALM screen, showing the correct determination, is enclosed.

On November 19, 2007, the Office mailed the Determination of Patent Term Adjustment under 35 U.S.C. § 154(b) in the above-identified application. The Notice stated that the patent term adjustment to date is zero (0) days. The subject application for patent term adjustment was timely filed on February 19, 2008, concurrently with the issue fee payment.

Applicants dispute the reduction of 109 days for the filing of the Supplemental Amendment on February 2, 2007, after the filing of a Response to Restriction/Election Requirement filed on October 16, 2006. Applicants contend that the Supplemental Amendment was expressly requested by the examiner. In addition, applicants disclose that the 63 day adjustment for Office delay is not warranted because examiner's interviews allegedly held on February 1, 2007, and February 2, 2007, constitute an Office action within the meaning of 35 U.S.C. 132. Given these assertions, applicants maintain that the PTA at the time of the mailing of the notice of allowance is nine (9) days.

The Office initially determined a patent term adjustment of zero (0) days based on an adjustment for PTO delay of seventy-seven (77) days resulting from 63 days of delay in mailing a non-final office action on April 20, 2007, four (4) months and 63 days after the filing on October 16, 2006, of a response to a restriction requirement, and the mailing of a notice of allowance on November 19, 2007, four (4) months and 14 days after the filing on July 5, 2007, of a response to a non-final office action, pursuant to 35 U.S.C. § 154(b)(1)(A)(ii) and 37 C.F.R. § 1.703(a)(2). The patent term adjustment was reduced by one hundred fourteen (114) days of applicant delay pursuant to 37 C.F.R. § 1.704(b). Specifically, the patent term adjustment was reduced by five (5) days under 37 CFR 1.704(b) for the filing of a response on February 21, 2006, to a non-final Office action on November 16, 2005, which was three (3) months and five (5) days after the mailing of the non-final Office action, and by 109 days under 37 CFR 1.704(c)(8) for the filing of a supplemental response, which was filed on February 2, 2007, or 109 days, after the filing of an initial reply on October 16, 2006. The 109 day period of reduction for applicant delay and the 63 day period of adjustment for Office delay are at issue.

37 CFR 1.704(c)(8) provides that the filing of a supplemental reply, other than one expressly requested by the examiner, constitutes a failure to engage in reasonable efforts to conclude processing or examination. The record has been reviewed and it is concluded that the response filed on February 2, 2007, was expressly requested by the examiner within the meaning of 37 CFR 1.704(c)(8). Accordingly, the 109 day reduction is not warranted and will be removed.

However, the 63 day period of adjustment is correct. 37 CFR 1.703(a)(2) states that the period of adjustment due to examination delay is:

> The number of days, if any, in the period beginning on the day after the date that is four months after the date a reply in compliance with § 1.113(c) was filed and ending on the date of **mailing** of either an action under 35 U.S.C. 132, or a notice of allowance under 35 U.S.C. 151, whichever occurs first;
>
> (emphasis added)

A telephone interview is not a mailing of an action under 35 U.S.C. 132. Whether the putative communications on February 1 and 2, 2007, occurred notwithstanding, a review of the record reveals that no Office communication was mailed on February 2, 2007, or at any point between the filing of the response to the restriction requirement filed on October 16, 2006, and the mailing of a non-final rejection on April 20, 2007. Accordingly, the period of adjustment for examination delay for the mailing of a non-final rejection on April 20, 2007, or four (4) months and 63 days after the filing of the restriction requirement filed on October 16, 2006, is proper and will not be removed.

The Office acknowledges submission of the $200.00 fee set forth in 37 CFR 1.18(e). No additional fees are required.

In view thereof, the correct determination of patent term adjustment at the time of the mailing of the notice of allowance is SEVENTY-TWO (72) days (77 (63+14) days of PTO delay, reduced by five (5) days of Applicant delay).

The application is being forwarded to the Office of Data Management for issuance of a patent. The patent term adjustment indicated on the patent (as shown on the Issue Notification mailed about three weeks prior to patent issuance) will include any additional adjustment accrued both for Office delay in issuing the patent more than four months after payment of the issue fee and satisfaction of all outstanding requirements, and for the Office taking in excess of three years to issue the patent (to the extent that the three-year period does not overlap with periods already accorded).

Telephone inquiries specific to this matter should be directed to Douglas I. Wood, Senior Petitions Attorney, at (571) 272-3231.

Nancy Johnson
Senior Petitions Attorney
Office of Petitions

Encl: Revised PAIR Calculation

Day : Tuesday
Date: 9/16/2008

PALM INTRANET

Time: 15:31:43

PTA Calculations for Application: 10/895596			
Application Filing Date:	07/21/2004	PTO Delay (PTO):	77
Issue Date of Patent:		Three Years:	0
Pre-Issue Petitions:	0	Applicant Delay (APPL):	114
Post-Issue Petitions:	0	Total PTA (days):	72
PTO Delay Adjustment:	109		

File Contents History

Number	Date	Contents Description	PTO	APPL	START
73	09/03/2008	ADJUSTMENT OF PTA CALCULATION BY PTO	109		
59	11/19/2007	MAIL NOTICE OF ALLOWANCE	14		49
58	11/15/2007	ISSUE REVISION COMPLETED			
57	11/15/2007	DOCUMENT VERIFICATION			
56	11/15/2007	NOTICE OF ALLOWANCE DATA VERIFICATION COMPLETED			
55	11/13/2007	NOTICE OF ALLOWABILITY			
50	10/19/2007	DATE FORWARDED TO EXAMINER			
49	07/05/2007	RESPONSE AFTER NON-FINAL ACTION			
48	10/16/2007	CASE DOCKETED TO EXAMINER IN GAU			
47	07/13/2007	CASE DOCKETED TO EXAMINER IN GAU			
46	04/20/2007	MAIL NON-FINAL REJECTION	63		40
45	04/16/2007	NON-FINAL REJECTION			
44	02/09/2007	DATE FORWARDED TO EXAMINER			
43	02/02/2007	SUPPLEMENTAL RESPONSE		109	40
42	12/15/2006	CASE DOCKETED TO EXAMINER IN GAU			
41	10/20/2006	DATE FORWARDED TO EXAMINER			
40	10/16/2006	RESPONSE TO ELECTION / RESTRICTION FILED			
39	10/12/2006	CASE DOCKETED TO EXAMINER IN GAU			
38	09/18/2006	MAIL RESTRICTION REQUIREMENT			
37	09/14/2006	REQUIREMENT FOR RESTRICTION / ELECTION			
36	06/21/2006	DATE FORWARDED TO EXAMINER			
35	06/19/2006	RESPONSE TO ELECTION / RESTRICTION FILED			
34	05/19/2006	MAIL RESTRICTION REQUIREMENT			
33	05/15/2006	REQUIREMENT FOR RESTRICTION / ELECTION			
32	04/09/2006	CASE DOCKETED TO EXAMINER IN GAU			

31	03/28/2006	CASE DOCKETED TO EXAMINER IN GAU			
30	02/28/2006	DATE FORWARDED TO EXAMINER			
29	02/21/2006	RESPONSE AFTER NON-FINAL ACTION		5	28
28	11/16/2005	MAIL NON-FINAL REJECTION			
27	11/10/2005	NON-FINAL REJECTION			
26	08/05/2005	PARALEGAL TD ACCEPTED			
25	07/27/2005	TERMINAL DISCLAIMER FILED		0	23
24	08/04/2005	DATE FORWARDED TO EXAMINER			
23	07/27/2005	RESPONSE AFTER NON-FINAL ACTION			
22	06/28/2005	CASE DOCKETED TO EXAMINER IN GAU			
21	06/20/2005	MAIL NON-FINAL REJECTION			
20	06/13/2005	NON-FINAL REJECTION			
19	03/18/2005	IFW TSS PROCESSING BY TECH CENTER COMPLETE			
18	03/18/2005	CASE DOCKETED TO EXAMINER IN GAU			
17.7	12/10/2004	INFORMATION DISCLOSURE STATEMENT (IDS) FILED			
17	12/10/2004	INFORMATION DISCLOSURE STATEMENT (IDS) FILED			
16	10/04/2004	REFERENCE CAPTURE ON IDS			
15.7	10/04/2004	INFORMATION DISCLOSURE STATEMENT (IDS) FILED			
15	10/04/2004	INFORMATION DISCLOSURE STATEMENT (IDS) FILED			
14	11/24/2004	APPLICATION RETURN FROM OIPE			
13	11/24/2004	APPLICATION RETURN TO OIPE			
12	11/24/2004	APPLICATION DISPATCHED FROM OIPE			
11	11/24/2004	APPLICATION IS NOW COMPLETE			
10	10/27/2004	ADDITIONAL APPLICATION FILING FEES			
9	10/27/2004	A SET OF SYMBOLS AND PROCEDURES, PROVIDED TO THE PTO ON A SET OF COMPUTER LISTINGS, THAT DESCRIBE IN			
8	10/27/2004	CRF DISK HAS BEEN RECEIVED BY PREEXAM / GROUP / PCT			
7	10/27/2004	A STATEMENT BY ONE OR MORE INVENTORS SATISFYING THE REQUIREMENT UNDER 35 USC 115, OATH OF THE APPLIC			
6	11/09/2004	CRF IS GOOD TECHNICALLY / ENTERED INTO DATABASE			
5	09/16/2004	NOTICE MAILED--APPLICATION INCOMPLETE--			

		FILING DATE ASSIGNED			
4	09/03/2004	CLEARED BY OIPE CSR			
3	09/03/2004	CASE CLASSIFIED BY OIPE			
2	08/09/2004	IFW SCAN & PACR AUTO SECURITY REVIEW			
1	07/21/2004	INITIAL EXAM TEAM NN			

Search Another: Application# Search

EXPLANATION OF PTA CALCULATION

EXPLANATION OF PTE CALCULATION

To go back, right click here and select Back. To go forward, right click here and select Forward. To refresh, right click here and select Refresh.

Back to OASIS | Home page

UNITED STATES PATENT AND TRADEMARK OFFICE

COMMISSIONER FOR PATENTS
UNITED STATES PATENT AND TRADEMARK OFFICE
P.O. BOX 1450
ALEXANDRIA, VA 22313-1450
www.uspto.gov

MAIL

NOV 18 2004

DIRECTOR OFFICE
TECHNOLOGY CENTER 2600

Waddey & Patterson, P.C.
AmSouth Center, Suite 302
200 Clinton Avenue
Huntsville AL 35801

In re Application of :
Richard L. Hartman, et al. :
Application No. 10/895,615 : DECISION ON PETITION
Filed: July 21, 2004 : TO MAKE SPECIAL
For: **PROGRAMMABLE MULTIFUNCTION** :
ELECTRONIC CAMERA :

This is a decision on the petition under 37 C.F.R. §1.102 to make special filed August 27, 2004 which is considered as pursuant to MPEP §708.02 (IV), applicant's age.

A petition to make special under MPEP §708.02, IV, must show that petitioner is 65 years of age, or more. Acceptable evidence includes a birth certificate, copy of a driver's license, or simply a statement by the applicant. No fee is required.

The petition includes a statement by Mr. Richard L. Hartman attesting that he is 67 years of age.

Accordingly, the petition is **GRANTED**.

The application will retain its special status throughout its entire prosecution, including any appeal to the Board of Patent Appeals and Interferences, subject only to diligent prosecution by the applicant.

The application is being forwarded to the examiner for expedited prosecution.

Kenneth A. Wieder
Special Program Examiner
Technology Center 2600
Communications

UNITED STATES PATENT AND TRADEMARK OFFICE

Commissioner for Patents
United States Patent and Trademark Office
P.O. Box 1450
Alexandria, VA 22313-1450
www.uspto.gov

FLEIT KAIN GIBBONS GUTMAN BONGINI & BIANCO
21355 EAST DIXIE HIGHWAY
SUITE 115
MIAMI, FL 33180

COPY MAILED

DEC 1 1 2007

OFFICE OF PETITIONS

In re Patent No. 7,185,454	:	
Issue Date: March 6, 2007	:	
Application No. 10/895,628	:	ON PETITION
Filed: July 20, 2004	:	
Attorney Docket No. 7400-X04-064	:	

This is a decision on the petition filed July 20, 2007, which is being treated as a request under 37 CFR 3.81(b)[1] to correct the assignee data on the front page of the above-identified patent by way of a Certificate of Correction.

The request is **GRANTED**.

Telephone inquiries concerning this decision may be directed to the undersigned at (571) 272-3204. Inquiries regarding the issuance of a certificate of correction should be directed to the Certificate of Correction Branch at (571) 272-4200.

The Certificates of Correction Branch will be notified of this decision granting the petition under 37 CFR 3.81(b) and directing issuance of the requested Certificate of Correction.

Sherry D. Brinkley
Petitions Examiner
Office of Petitions

[1] *See* MPEP 1309, subsection II; and Official Gazette of June 22, 2004.

BEST AVAILABLE COPY

SPE RESPONSE FOR CERTIFICATE OF CORRECTION

Paper No.: ____

DATE : 2-7-07

TO SPE OF : ART UNIT 2881

SUBJECT : Request for Certificate of Correction on Patent No.: 7119344 B2 (10/895629

A response is requested with respect to the accompanying request for a certificate of correction.

Please complete this form and return with file, within 7 days to:
Certificates of Correction Branch - PK 3-915
Palm location **7580** - Tel. No. 305-8309

With respect to the change(s) requested, correcting Office and/or Applicant's errors, should the patent read as shown in the certificate of correction? No new matter should be introduced, nor should the scope or meaning of the claims be changed.

Should claims be entered as requested.

E. James
Certificates of Correction Branch

Thank You For Your Assistance

The request for issuing the above-identified correction(s) is hereby:
Note your decision on the appropriate box.

- ☐ **Approved** — All changes apply.
- ☐ **Approved in Part** — Specify below which changes do not apply.
- ☐ **Denied** — State the reasons for denial below.

Comments:

SPE **Art Unit**

SPE RESPONSE FOR CERTIFICATE OF CORRECTION

Paper No.: _____

DATE : 5-11-07

TO SPE OF : ART UNIT 2881

SUBJECT : Request for Certificate of Correction on Patent No.: 7119344 (10/895629

A response is requested with respect to the accompanying request for a certificate of correction.

Please complete this form and return with file, within 7 days to:
Palm location **7580, Certificates of Correction Branch – South Tower – 9A22**
If response is for an IFW, **return to employee (named below) via PUBSCofC Team in MADRAS.**
With respect to the change(s) requested, correcting Office and/or Applicant's errors, should the patent read as shown in the certificate of correction (COCIN)? No new matter should be introduced, nor should the scope or meaning of the claims be changed.

See Applicant's last request and reply A/S/A/P

Eva James

Thank You For Your Assistance

Certificates of Correction Branch
Tel. No. 703-305-8309

The request for issuing the above-identified correction(s) is hereby:
Note your decision on the appropriate box.

- ☑ **Approved** — **All** changes apply.
- ☐ **Approved in Part** — Specify below which changes **do not** apply.
- ☐ **Denied** — State the reasons for denial below.

Comments:

SPE

2881
Art Unit

UNITED STATES PATENT AND TRADEMARK OFFICE

Commissioner for Patents
United States Patent and Trademark Office
P.O. Box 1450
Alexandria, VA 22313-1450
www.uspto.gov

Pitts and Brittan P.C.
P.O. Box 51295
Knoxville, TN 379509-1295

COPY MAILED

APR 2 8 2008

OFFICE OF PETITIONS

In re Application of	:	
Ernest Comerford	:	
Application No. 10/895,633	:	DECISION ON PETITION
Filed: July 21, 2004	:	TO WITHDRAW
Attorney Docket No. 30580.00	:	FROM RECORD

This is a decision on the Request to Withdraw as attorney or agent of record under 37 C.F.R. § 1.36(b), filed December 19, 2007.

The request is **APPROVED**.

A grantable request to withdraw as attorney/agent of record must be signed by every attorney/agent seeking to withdraw or contain a clear indication that one attorney is signing on behalf of another/others. A request to withdraw will not be approved unless at least 30 (thirty) days would remain between the date of approval and the later of the expiration date of a time to file a response or the expiration date of the maximum time period which can be extended under 37 C.F.R. § 1.136(a).

The request was signed by Morgan L. Fitch, IV on behalf of all attorneys of record. All attorneys/agents have been withdrawn. Applicant is reminded that there is no attorney of record at this time.

The request to change the correspondence of record is not acceptable as the requested correspondence address is not that of: (1) the first named signing inventor; or (2) an intervening assignee of the entire interest under 37 C.F.R 3.71. All future communications from the Office will be directed to the first named signing inventor at the first copied address below until otherwise properly notified by the applicant.

There is no outstanding Office action at this time.

The revocation power of attorney filed on February 27, 2007 was not accepted because the Certificate required by 37 CFR 3.73(b) has not been received.

Telephone inquiries concerning this decision should be directed to Terri Williams at 571-272-2991.

Terri Williams
Petitions Examiner
Office of Petitions

cc: **Ernest Comerford**
21 Thorpe Street
Stanthorpe, 4380
Australia

cc: **Dilworth & Barrese, LLP**
333 Earle Ovington Boulevard
Uniondale, NY 11553

UNITED STATES PATENT AND TRADEMARK OFFICE

UNITED STATES DEPARTMENT OF COMMERCE
United States Patent and Trademark Office
Address: COMMISSIONER FOR PATENTS
P.O. Box 1450
Alexandria, Virginia 22313-1450
www.uspto.gov

APPLICATION NUMBER	FILING OR 371(C) DATE	FIRST NAMED APPLICANT	ATTY. DOCKET NO./TITLE
10/895,633	07/21/2004	Ernest Comerford	30580.00

CONFIRMATION NO. 7726

POWER OF ATTORNEY NOTICE

22465
PITTS AND BRITTIAN P C
P O BOX 51295
KNOXVILLE, TN 37950-1295

OC000000029575005

Date Mailed: 04/24/2008

NOTICE REGARDING CHANGE OF POWER OF ATTORNEY

This is in response to the Power of Attorney filed 12/19/2007.

- The withdrawal as attorney in this application has been accepted. Future correspondence will be mailed to the new address of record. 37 CFR 1.33.

/tswilliams/

Office of Data Management, Application Assistance Unit (571) 272-4000, or (571) 272-4200, or 1-888-786-0101

UNITED STATES PATENT AND TRADEMARK OFFICE

Commissioner for Patents
United States Patent and Trademark Office
P.O. Box 1450
Alexandria, VA 22313-1450
www.uspto.gov

PITTS AND BRITTIAN P C
P O BOX 51295
KNOXVILLE TN 37950-1295

COPY MAILED

MAR 1 4 2008

OFFICE OF PETITIONS

In re Application of

COMERFORD, Ernest
Application No. 10/895,634
Filed: July 22, 2004
Attorney Docket No. **30581.00**

DECISION ON PETITION
TO WITHDRAW
FROM RECORD

This is a decision on the Request to Withdraw as attorney or agent of record under 37 C.F.R. § 1.36(b), filed December 19, 2007.

The request is **APPROVED**.

A grantable request to withdraw as attorney/agent of record must be signed by every attorney/agent seeking to withdraw or contain a clear indication that one attorney is signing on behalf of another/others. A request to withdraw will not be approved unless at least 30 (thirty) days would remain between the date of approval and the later of the expiration date of a time to file a response or the expiration date of the maximum time period which can be extended under 37 C.F.R. § 1.136(a).

The request was signed by Morgan Fitch on behalf of all attorneys of record who are associated with customer No. 22465. All attorneys/agents associated have been withdrawn. Applicant is reminded that there is no attorney of record at this time.

The request to change the correspondence of record is not acceptable as the requested correspondence address is not that of: (1) the first named signing inventor; or (2) an intervening assignee of the entire interest under 37 C.F.R 3.71. All future communications from the Office will be directed to the signing inventor at the first copied address below until otherwise properly notified by the applicant.

Telephone inquiries concerning this decision should be directed to Tredelle Jackson at 571-272-2783.

Tredelle D. Jackson
Petitions Examiner
Office of Petitions

cc: **ERNEST COMERFORD**
21 THORPE STREET
STANTHORPE, QLD 4380
AUSTRALIA

cc: **DILWORTH & BARRESE, LLP**
333 EARLE OVINGTON BOULEVARD
UNIONDALE, NY 11553

United States
Patent And
Trademark Office

P.O. Box 1450, Alexandria, Virginia 22313-1450 – www.uspto.gov

PETITION DECISION

09/29/04

Steven G. Saunders
Bromberg & Sunstein LLP
125 Summer Street
Boston, MA 02110-1618

Dear Applicant:

The Box PG Pub replacement drawings for application number 10/895638 received on 09/03/04 by the U. S. Patent and Trademark Office will be included for patent publication.

Telephone inquiries should be directed to Kaletus King, Office of Pre-Grant Publication 703 605-4283.

Kaletus King

Signature of Reviewer, Office of Pre-Grant Publication

UNITED STATES PATENT AND TRADEMARK OFFICE

Commissioner for Patents
United States Patent and Trademark Office
P.O. Box 1450
Alexandria, VA 22313-1450
www.uspto.gov

COPY MAILED
NOV 20 2006
OFFICE OF PETITIONS

ABB INC.
LEGAL DEPARTMENT-4U6
29801 EUCLID AVENUE
WICKLIFFE OH 44092

In re Application of	:	
Edgar R. Eley et al.	:	
Application No. 10/895,653	:	DECISION ON PETITION
Filed: July 21, 2004	:	TO WITHDRAW
Attorney Docket No. ABPT-0203/B040060	:	FROM RECORD

This is a decision on the Request to Withdraw as attorney or agent of record under 37 C.F.R. § 1.36(b), filed March 6, 2006.

The request is **NOT APPROVED**.

A grantable request to withdraw as attorney/agent of record must be signed by every attorney/agent seeking to withdraw or contain a clear indication that one attorney is signing on behalf of another/others. A request to withdraw will not be approved unless at least 30 (thirty) days would remain between the date of approval and the later of the expiration date of a time to file a response or the expiration date of the maximum time period which can be extended under 37 C.F.R. § 1.136(a).

The Office cannot approve the request at this time since the reasons provided do not meet any of the conditions under the mandatory or permissive categories enumerated in 37 CFR 10.40. Section 10.40 of Title 37 of the Code of Federal Regulation states, "[a] practitioner shall not withdraw from employment in a proceeding before the Office without permission from the Office[.]" More specifically, 37 CFR 10.40 states, "[i]f paragraph (b) of this section is not applicable, a practitioner may not request permission to withdraw in matter pending before the Office unless such request or such withdrawal is" for one the permissive reasons listed in 37 CFR 10.40(c). The reasons set forth in the request, ***client's legal department will prosecute application***, do not meet any the conditions set forth in 37 CFR 10.40.

All future communications from the Office will continue to be directed to the above-listed address until otherwise notified by applicant.

Telephone inquiries concerning this decision should be directed to Terri Williams at 571-272- 2991.

Terri Williams

Terri Williams
Petitions Examiner
Office of Petitions

cc: **WOODCOCK WASHBURN LLP**
CIRA CENTRE, 12TH FLOOR
2929 ARCH STREET
PHILADELPHIA, PA 19104-2891

UNITED STATES PATENT AND TRADEMARK OFFICE

Commissioner for Patents
United States Patent and Trademark Office
P.O. Box 1450
Alexandria, VA 22313-1450
www.uspto.gov

MOTOROLA INC
600 NORTH US HIGHWAY 45
W4 - 39Q
LIBERTYVILLE IL 60048-5343

COPY MAILED
SEP 2 4 2008

In re Application of	:	
Thomas E. Gitzinger, et al.	:	
Application No. 10/895,695	:	DECISION ON PETITION
Filed: July 21, 2004	:	
Attorney Docket No. CS23153RL	:	

This is a decision on the petition under the unintentional provisions of 37 CFR 1.137(b), filed January 16, 2008, to revive the above-identified application.

The petition is **GRANTED**.

This application became abandoned for failure to timely pay the issue and publication fees on or before November 30, 2007, as required by the Notice of Allowance and Fee(s) Due, mailed August 30, 2007. Accordingly, the date of abandonment of this application is December 1, 2007. The Notice of Abandonment was mailed January 8, 2008.

The petition satisfies the requirements of 37 CFR 1.137(b) in that petitioner has supplied (1) the reply in the form of payment of the issue fee of $1,440 and the publication fee of $300, (2) the petition fee of $1,540; and (3) a proper statement of unintentional delay.

37 CFR 1.137(b)(3) requires a statement that "the entire delay in filing the required reply from the due date for the reply until the filing of a grantable petition pursuant to 37 CFR 1.137(b) was unintentional." Since the statement appearing in the petition varies from the language required by 37 CFR 1.137(b)(3), the statement is being construed as the required statement. Petitioner must notify the Office if this is not a correct reading of the statement appearing in the petition.

Telephone inquiries concerning this decision should be directed to Terri Williams at (571) 272-2991.

This application is being referred to the Office of Data Management for processing into a patent.

Chris Bottorff
Petitions Examiner
Office of Petitions

UNITED STATES PATENT AND TRADEMARK OFFICE

UNITED STATES DEPARTMENT OF COMMERCE
United States Patent and Trademark Office
Address: COMMISSIONER FOR PATENTS
P.O. Box 1450
Alexandria, Virginia 22313-1450
www.uspto.gov

Patrick W. Rasche
Armstrong Teasdale LLP
Suite 2600
One Metropolitan Square
St. Louis, MO 63102

Mail Date: 04/21/2010

Applicant	: Xiangyang Tang	: DECISION ON REQUEST FOR
Patent Number	: 7583777	: RECALCULATION of PATENT
Issue Date	: 09/01/2009	: TERM ADJUSTMENT IN VIEW
Appliction No	: 10/895,704	: OF WYETH AND NOTICE OF INTENT TO
Filed	: 07/21/2004	: ISSUE CERTIFICATE OF CORRECTION
		:

The Request for Recalculation is **GRANTED** to the extent indicated.

The patent term adjustment has been determined to be **308** days. The USPTO will *sua sponte* issue a certificate of correction reflecting the amount of PTA days determined by the recalculation.

Prior to the issuance of the certificate of correction, the USPTO will afford patentee an opportunity to be heard and request reconsideration. Accordingly, patentee has **one month or thirty (30) days**, whichever is longer, to file a request for reconsideration of this patent term adjustment calculation. See 35 U.S.C. 154(b)(3)(B)(ii) and 37 CFR 1.322(a)(4). No extensions of time will be granted under 37 CFR 1.136.

Patentee should use document code PET.OP if electronically filing a request for reconsideration of this patent term adjustment calculation. The patentee must also include the information required by 37 CFR 1.705(b)(2) and the fee required by 37 CFR 1.18(e). If patentee does not file a timely request for reconsideration of this patent term adjustment calculation including the information required by 37 CFR 1.705(b)(2) and the fee required by 37 CFR 1.18(e), the USPTO will issue a certificate of correction reflecting the PTA determination noted above.

Patentee should be aware that in order to preserve the right to review in the United States District Court for the District of Columbia of the USPTO patent term adjustment determination, patentee must ensure that he or she also take the steps required under 35 U.S.C. 154(b)(4)(A) in a timely manner. Nothing in the request for recalculation should be construed as providing an alternative time frame for commencing a civil action under 35 U.S.C. 154(b)(4)(A).

Any questions concerning this decision should be directed to the Office of Patent Legal Administration at 571-272-7702.

UNITED STATES PATENT AND TRADEMARK OFFICE

UNITED STATES DEPARTMENT OF COMMERCE
United States Patent and Trademark Office
Address: COMMISSIONER FOR PATENTS
P.O. Box 1450
Alexandria, Virginia 22313-1450
www.uspto.gov

SNELL & WILMER LLP (OC)
600 ANTON BOULEVARD
SUITE 1400
COSTA MESA, CA 92626

Mail Date: 04/21/2010

Applicant	: Noritake Shiga	: DECISION ON REQUEST FOR
Patent Number	: 7620411	: RECALCULATION of PATENT
Issue Date	: 11/17/2009	: TERM ADJUSTMENT IN VIEW
Appliction No	: 10/895,725	: OF WYETH AND NOTICE OF INTENT TO
Filed	: 07/21/2004	: ISSUE CERTIFICATE OF CORRECTION
		:

The Request for Recalculation is **GRANTED** to the extent indicated.

The patent term adjustment has been determined to be **707** days. The USPTO will *sua sponte* issue a certificate of correction reflecting the amount of PTA days determined by the recalculation.

Prior to the issuance of the certificate of correction, the USPTO will afford patentee an opportunity to be heard and request reconsideration. Accordingly, patentee has **one month or thirty (30) days**, whichever is longer, to file a request for reconsideration of this patent term adjustment calculation. See 35 U.S.C. 154(b)(3)(B)(ii) and 37 CFR 1.322(a)(4). No extensions of time will be granted under 37 CFR 1.136.

Patentee should use document code PET.OP if electronically filing a request for reconsideration of this patent term adjustment calculation. The patentee must also include the information required by 37 CFR 1.705(b)(2) and the fee required by 37 CFR 1.18(e). If patentee does not file a timely request for reconsideration of this patent term adjustment calculation including the information required by 37 CFR 1.705(b)(2) and the fee required by 37 CFR 1.18(e), the USPTO will issue a certificate of correction reflecting the PTA determination noted above.

Patentee should be aware that in order to preserve the right to review in the United States District Court for the District of Columbia of the USPTO patent term adjustment determination, patentee must ensure that he or she also take the steps required under 35 U.S.C. 154(b)(4)(A) in a timely manner. Nothing in the request for recalculation should be construed as providing an alternative time frame for commencing a civil action under 35 U.S.C. 154(b)(4)(A).

Any questions concerning this decision should be directed to the Office of Patent Legal Administration at 571-272-7702.

UNITED STATES PATENT AND TRADEMARK OFFICE

UNITED STATES DEPARTMENT OF COMMERCE
United States Patent and Trademark Office
Address: COMMISSIONER FOR PATENTS
P.O. Box 1450
Alexandria, Virginia 22313-1450
www.uspto.gov

SNELL & WILMER LLP (OC)
600 ANTON BOULEVARD
SUITE 1400
COSTA MESA, CA 92626

Mail Date: 05/18/2010

Applicant : Noritake Shiga
Patent Number : 7620411
Issue Date : 11/17/2009
Application No : 10/895,725
Filed : 07/21/2004

: NOTICE CONCERNING IMPROPER
: CALCULATION OF PATENT TERM
: ADJUSTMENT BASED UPON USPTO
: IMPROPERLY MEASURING REDUCTION
: PERIOD UNDER 37 CFR 1.704(c)(10).

The United States Patent and Trademark Office (USPTO) discovered that in processing the recent recalculation decisions mailed in response to patentee's filed Request for Recalculation of Patent Term Adjustment in view of Wyeth, the USPTO improperly measured the reduction period for reductions under 37 CFR 1.704(c)(10). Pursuant to 37 CFR 1.704(c)(10), patentee's reduction begins on the date of filing the amendment under 37 CFR 1.312 ("1.312 amendment") or other related paper and ends on the date that the Office mails a response to the filing of the 1.312 amendment or other paper. It has been discovered that during the recalculation, the calculation failed to the limit the reduction to the mail date of the response to the 1.312 amendment or other paper. Accordingly, patentee's reductions were greater than warranted.

This notice **VACATES** the previous GRANTED request for recalculation and provides patentee with a revised GRANTED recalculation.

The patent term adjustment has been determined to be **742** days. The USPTO will *sua sponte* issue a certificate of correction reflecting the amount of patent term adjustment (PTA) days determined by the recalculation.

Prior to the issuance of the certificate of correction, the USPTO will afford patentee an opportunity to be heard and request reconsideration. Accordingly, patentee has **one month or thirty (30) days** from the mail date of this notice, whichever is longer, to file a request for reconsideration of this PTA calculation. See 35 U.S.C. § 154(b)(3)(B)(ii) and 37 CFR 1.322(a)(4).

Patentee should use document code PET.OP if electronically filing a request for reconsideration of this PTA calculation. The patentee must also include the information required by 37 CFR 1.705(b)(2), and the fee required by 37 CFR 1.18(e). If patentee does not file a timely request for reconsideration of this PTA calculation, including the information required by 37 CFR 1.705(b)(2) and the fee required by 37 CFR 1.18(e), the USPTO will issue a certificate of correction reflecting the PTA determination noted above.

Patentee should be aware that in order to preserve the right of review of the USPTO's PTA determination in the United States District Court for the District of Columbia, patentee must ensure that the steps required under 35 U.S.C. § 154 (b)(4) are taken in a timely manner. Nothing in the request for recalculation should be construed as providing an alternative time frame for commencing a civil action under 35 U.S.C. § 154(b)(4).

UNITED STATES PATENT AND TRADEMARK OFFICE

Commissioner for Patents
United States Patent and Trademark Office
P.O. Box 1450
Alexandria, VA 22313-1450
www.uspto.gov

GORE ENTERPRISE HOLDINGS, INC.
551 PAPER MILL ROAD
P. O. BOX 9206
NEWARK, DE 19714-9206

COPY MAILED

AUG 05 2009

OFFICE OF PETITIONS

In re Application of	:	
James Todd Walter	:	
Application No. 10/895,737	:	ON PETITION
Filed: July 20, 2004	:	
Attorney Docket No. MP/143A	:	

This is a decision on the petition filed June 16, 2009, under 37 CFR 1.137(b) to revive the above-identified application for copendency with a continuing application.

The petition is **GRANTED**.

The application became abandoned for failure to timely reply within the meaning of 37 CFR 1.113 to the final Office action, mailed December 8, 2008, which set a shortened statutory period for reply of three (3) months. No extension of time under the provisions of 37 CFR 1.136(a) was obtained. Accordingly, the application became abandoned on March 9, 2009. On June 16, 2009, the present petition was filed. A Notice of Abandonment was subsequently mailed on July 31, 2009.

Petitioner seeks revival solely for obtaining copendency with continuing application No. 12/478,528 filed June 4, 2009, in that the necessary continuity inadvertently was not maintained at that time.

Since this application is being revived for purposes of continuity with application No. 12/478,528, and continuity having been established by this decision reviving the above-captioned application, the above-captioned application is again abandoned in favor of the continuing application.

The offer to make the belated payment of the 3-month extension of time fee

under 37 CFR 1.136(a) is unnecessary. Extensions of time under 37 CFR 1.136 are available only if asked for "prior to or with the response." In no case, however, may an applicant respond later than the maximum time period set by statute. Accordingly, if the question of abandonment arises when the provisions of 37 CFR 1.136 can no longer be used, then the application is abandoned when the unextended time for response has expired. Therefore, no extension of time fees are due on a petition for revival. In view thereof, the $1,110 extension of time fee submitted with the petition is being refunded to petitioner's deposit account as authorized.

Telephone inquiries concerning this matter may be directed to the undersigned at (571) 272-3204.

Sherry D. Brinkley
Petitions Examiner
Office of Petitions

UNITED STATES PATENT AND TRADEMARK OFFICE

Commissioner for Patents
United States Patent and Trademark Office
P.O. Box 1450
Alexandria, VA 22313-1450
www.uspto.gov

GENE SCOTT: PATENT LAW & VENTURE GROUP
3140 RED HILL AVE
SUITE 150
COSTA MESA CA 92626-3440

COPY MAILED
AUG 0 7 2006
OFFICE OF PETITIONS

In re Application of	:
Aram Tanielian	:
Application No. 10/895,767	: DECISION GRANTING
Filed: July 20, 2004	: PETITION
Attorney Docket No. Taniel.A-01	:

This is a decision on the petition to revive under 37 CFR 1.137(b), filed March 12, 2006.

The petition is **GRANTED**.

The application became abandoned for failure to submit $9 for 1 additional claim, as required by the Notice to File Missing Parts mailed September 23, 2004. This Notice set an extendable period for reply of two (2) months. No additional claim fee having been received, the application became abandoned on November 24, 2004. The mailing of this decision precedes the mailing of a Notice of Abandonment.

With the instant petition, petitioner paid the petition fee, submitted the additional claim fee (now $25), and made the proper statement of unintentional delay.

A decision on the petition to make special, also filed on March 12, 2006, will be forthcoming in due course.

Telephone inquiries specific to this decision may be directed to the undersigned at (571)272-3207.

Cliff Congo
Petitions Attorney
Office of Petitions

UNITED STATES PATENT AND TRADEMARK OFFICE

Commissioner for Patents
United States Patent and Trademark Office
P.O. Box 1450
Alexandria, VA 22313-1450
www.uspto.gov

AKERMAN SENTERFITT
P.O. BOX 3188
WEST PALM BEACH, FL 33402-3188

COPY MAILED

JUN 0 1 2007

OFFICE OF PETITIONS

In re Application of Pfeifer et al. :
Application No. 10/895,781 : Decision on Petition
Filing Date: July 21, 2004 :
Attorney Docket No. 3926.097 :

This is a decision on the petition under 37 CFR 1.137(b), filed December 22, 2006, to revive the above-identified application.

The petition is **granted**.

The above-identified application became abandoned for failure to reply in a timely manner to the non-final Office action mailed August 9, 2005, which set a shortened statutory period for reply of three (3) months. An extension of time under the provisions of 37 CFR 1.136(a) was not obtained. Accordingly, the above-identified application became abandoned on November 10, 2005. A Notice of Abandonment was mailed on July 5, 2006.

The instant petition requests revival of the application.

Petitioner has met the requirements to revive the above-identified application pursuant to 37 CFR 1.137(b). Therefore, the petition is granted and the application is revived.

37 CFR 1.137(b)(3) requires "a statement that the entire delay in filing the required reply from the due date for the reply until the filing of a grantable petition pursuant to 37 CFR 1.137(b) [was] unintentional." To the extent any statement of delay in the petition varies from this exact language, the statement will be construed as the equivalent of the statement above. If the entire delay from the date of abandonment, November 10, 2005, until the date the petition was filed, December 22, 2006, was not unintentional, petitioner must notify the Office.

The petition is signed by Yonghong Chen on behalf of petitioner. Chen was not an attorney or agent of record at the time the application became abandoned. Therefore, it appears Chen was not in a position to have firsthand or direct knowledge of the facts and circumstances of the delay. Nevertheless, the statement by Chen that the entire delay was unintentional is being treated as having been made as the result of a reasonable inquiry into the facts and circumstances of such delay. In the event that such an inquiry has not been made, petitioner must make such an inquiry. If such inquiry results in the discovery that a portion of the delay from the due date for

the reply until the filing of a grantable petition pursuant to 37 CFR 1.137(b) was unintentional, petitioner must notify the Office.

Technology Center Art Unit 1725 will be informed of the instant decision and the application will be further examined in due course.

Telephone inquiries regarding this communication should be directed to Petitions Attorney Steven Brantley at (571) 272-3203.

Charles Steven Brantley
Senior Petitions Attorney
Office of Petitions

UNITED STATES PATENT AND TRADEMARK OFFICE

Commissioner for Patents
United States Patent and Trademark Office
P.O. Box 1450
Alexandria, VA 22313-1450
www.uspto.gov

COPY MAILED

MAR 0 5 2008

OFFICE OF PETITIONS

BEYER WEAVER LLP
P.O. BOX 70250
OAKLAND, CA 94612-0250

In re Application of
UMEDA, Yuchi et al.
Application No. 10/895,796
Filed: July 20, 2004
Attorney Docket No. **ALPSP165**

DECISION ON PETITION
TO WITHDRAW
FROM RECORD

This is a decision on the Request to Withdraw as attorney or agent of record under 37 C.F.R. § 1.36(b), filed February 05, 2008.

The request is **APPROVED**.

A grantable request to withdraw as attorney/agent of record must be signed by every attorney/agent seeking to withdraw or contain a clear indication that one attorney is signing on behalf of another/others. A request to withdraw will not be approved unless at least 30 (thirty) days would remain between the date of approval and the later of the expiration date of a time to file a response or the expiration date of the maximum time period which can be extended under 37 C.F.R. § 1.136(a).

The request was signed by James E. Austin on behalf of all attorneys of record who are associated with customer No. 22434.

Haruo Yawata has been withdrawn as attorney or agent of record; all other attorneys remain of record.

The correspondence address of record remains unchanged.

There are no outstanding office actions at time.

Telephone inquiries concerning this decision should be directed to the undersigned at 571-272-4231.

Michelle R. Eason
Paralegal Specialist
Office of Petitions

UNITED STATES PATENT AND TRADEMARK OFFICE

UNITED STATES DEPARTMENT OF COMMERCE
United States Patent and Trademark Office
Address: COMMISSIONER FOR PATENTS
P.O. Box 1450
Alexandria, Virginia 22313-1450
www.uspto.gov

SPRINT
6391 SPRINT PARKWAY
KSOPHT0101-Z2100
OVERLAND PARK, KS 66251-2100

Mail Date: 04/21/2010

Applicant	: Jesse Kates	: DECISION ON REQUEST FOR
Patent Number	: 7602901	: RECALCULATION of PATENT
Issue Date	: 10/13/2009	: TERM ADJUSTMENT IN VIEW
Appliction No	: 10/895,802	: OF WYETH AND NOTICE OF INTENT TO
Filed	: 07/21/2004	: ISSUE CERTIFICATE OF CORRECTION
		:

The Request for Recalculation is **GRANTED** to the extent indicated.

The patent term adjustment has been determined to be **1277** days. The USPTO will *sua sponte* issue a certificate of correction reflecting the amount of PTA days determined by the recalculation.

Prior to the issuance of the certificate of correction, the USPTO will afford patentee an opportunity to be heard and request reconsideration. Accordingly, patentee has **one month or thirty (30) days**, whichever is longer, to file a request for reconsideration of this patent term adjustment calculation. See 35 U.S.C. 154(b)(3)(B)(ii) and 37 CFR 1.322(a)(4). No extensions of time will be granted under 37 CFR 1.136.

Patentee should use document code PET.OP if electronically filing a request for reconsideration of this patent term adjustment calculation. The patentee must also include the information required by 37 CFR 1.705(b)(2) and the fee required by 37 CFR 1.18(e). If patentee does not file a timely request for reconsideration of this patent term adjustment calculation including the information required by 37 CFR 1.705(b)(2) and the fee required by 37 CFR 1.18(e), the USPTO will issue a certificate of correction reflecting the PTA determination noted above.

Patentee should be aware that in order to preserve the right to review in the United States District Court for the District of Columbia of the USPTO patent term adjustment determination, patentee must ensure that he or she also take the steps required under 35 U.S.C. 154(b)(4)(A) in a timely manner. Nothing in the request for recalculation should be construed as providing an alternative time frame for commencing a civil action under 35 U.S.C. 154(b)(4)(A).

Any questions concerning this decision should be directed to the Office of Patent Legal Administration at 571-272-7702.

UNITED STATES PATENT AND TRADEMARK OFFICE

Commissioner for Patents
United States Patent and Trademark Office
P.O. Box 1450
Alexandria, VA 22313-1450
www.uspto.gov

FOLEY & LARDNER
150 EAST GILMAN STREET
P.O. BOX 1497
MADISON WI 53701-1497

COPY MAILED

AUG 0 8 2005

OFFICE OF PETITIONS

In re Application of	:	
Gardner & Lane	:	
Application No. 10/895,809	:	ON PETITION
Filed: July 21, 2004	:	
Attorney Docket No. 033948-0128	:	

This is a decision on the petition filed under 37 CFR 1.10(d) to accord the application a filing date of July 13, 2005.

The petition is **granted**.

The record reflects that the subject application arrived at the Patent and Trademark Office in an Express Mail envelope with Express Mail label EV383675576US showing a date-in of July 20, 2004. Petitioner filed the instant petition on July 13, 2005, asserting that the application should have been accorded a filing date of July 21, 2004, as that was date the application was deposited with the Express Mail service.

Title 37, Section 1.10(d) of the Code of Federal Regulations reads, in pertinent part:

> Any person filing correspondence under this section that was received by the Office and delivered by the "Express Mail Post Office to Addressee" service of the USPS who can show that the "date-in" on the "Express Mail" mailing label or other official notation entered by the USPS was incorrectly entered or omitted by the USPS, may petition the Commissioner to accord the correspondence a filing date as of the date the correspondence is shown to have been deposited with the USPS, provided that:
>
> (1) The petition is filed promptly after the person becomes aware that the Office has accorded or will accord, a filing date based upon an incorrect entry by USPS;
>
> (2) The number of the "Express Mail" mailing label was placed on the paper(s) or fee(s) that constitute the correspondence prior to the original mailing by "Express Mail"; and
>
> (3) The petition includes a showing which establishes, to the satisfaction of the Commissioner, that the requested filing date was the date the correspondence was deposited in the "Express Mail Post Office to Addressee" service prior to the last scheduled pickup for that day. Any showing pursuant to this paragraph must be corroborated by evidence from the USPS or that came into being after deposit within one business day of the deposit of the correspondence in the "Express Mail Post Office to Addressee" service of the USPS.

All of the above requirements have been met. The application will, therefore, be accorded a filing date of July 21, 2004.

The application file is being forwarded to the Office of Initial Patent Examination where the application will be accorded a filing date of July 21, 2004, and a corrected filing receipt mailed.

Telephone inquiries concerning this decision should be directed to the undersigned at (571) 272-3222.

Kenya A. McLaughlin

Kenya A. McLaughlin
Petitions Attorney
Office of Petitions

UNITED STATES PATENT AND TRADEMARK OFFICE

Commissioner for Patents
United States Patent and Trademark Office
P.O. Box 1450
Alexandria, VA 22313-1450
www.uspto.gov

FOLEY & LARDNER LLP
150 EAST GILMAN STREET
P.O. BOX 1497
MADISON WI 53701-1497

COPY MAILED

DEC 14 2006

OFFICE OF PETITIONS

In re Application of	:	
GARDNER, et al.	:	
Application No. 10/895,809	:	DECISION GRANTING PETITION
Filed: July 21, 2004	:	UNDER 37 CFR 1.313(c)(2)
Attorney Docket No. 033948-0128	:	

This is a decision on the petition under 37 CFR 1.313(c)(2), filed December 12, 2006, to withdraw the above-identified application from issue after payment of the issue fee.

The petition is **GRANTED**.

The above-identified application is withdrawn from issue for consideration of a submission under 37 CFR 1.114 (request for continued examination). *See* 37 CFR 1.313(c)(2).

Petitioner is advised that the issue fee paid on November 13, 2006 cannot be refunded. If, however, this application is again allowed, petitioner may request that it be applied towards the issue fee required by the new Notice of Allowance.[1]

Telephone inquiries should be directed to Monica A. Graves at (571) 272-7253.

This application is being referred to Technology Center AU 1655 for processing of the request for continued examination under 37 CFR 1.114 and for consideration of the concurrently filed Information Disclosure Statement.

Frances Hicks
Petitions Examiner
Office of Petitions

---

[1] *The request to apply the issue fee to the new Notice may be satisfied by completing and returning the new Part B – Fee(s) Transmittal Form (along with any balance due at the time of submission). Petitioner is advised that the Issue Fee Transmittal Form must be completed and timely submitted to avoid abandonment of the application.*

UNITED STATES PATENT AND TRADEMARK OFFICE

Commissioner for Patents
United States Patent and Trademark Office
P.O. Box 1450
Alexandria, VA 22313-1450
www.uspto.gov

David J. Thibodeau, Jr.
Hamilton, Brook, Smith & Reynolds, PC
530 Virginia Road
P.O. Box 9133
Concord, MA 01742-9133

COPY MAILED

APR 23 2007

OFFICE OF PETITIONS

In re Application of	:	
Bing Chiang et al.	:	
Application No. 10/895,813	:	DECISION ON PETITION
Filed: July 20, 2004	:	TO WITHDRAW
Attorney Docket No. 2479.2186-001	:	FROM RECORD
	:	

This is a decision on the Request to Withdraw as attorney or agent of record under 37 C.F.R. § 1.36(b), filed December 11, 2006.

The request is **NOT APPROVED** as moot.

A review of the file record indicates that the power of attorney to David J. Thibodeau, Jr. and all attorneys/agents associated with customer number 21005 has been revoked by the assignee, IPR Licensing, Inc., of the patent application on March 16, 2007. Accordingly, the request to withdraw under 37 C.F.R. § 1.36(b) is moot.

All future communications from the Office will continue to be directed to the below-listed address until otherwise notified by applicant.

Telephone inquires concerning this decision should be directed to Kimberly Inabinet at 571-272- 4618.

Frances Hicks
Petitions Examiner
Office of Petitions

cc: Volpe and Loenig, P.C.
Dept. ICC
United Plaza, Suite 1600
30 South 17th Street
Philadelphia, PA 19103

UNITED STATES PATENT AND TRADEMARK OFFICE

UNITED STATES DEPARTMENT OF COMMERCE
United States Patent and Trademark Office
Address: COMMISSIONER FOR PATENTS
P.O. Box 1450
Alexandria, Virginia 22313-1450
www.uspto.gov

APPLICATION NUMBER	FILING OR 371 (c) DATE	FIRST NAMED APPLICANT	ATTY. DOCKET NO./TITLE
10/895,813	07/20/2004	Bing Chiang	

CONFIRMATION NO. 7745

OC000000023467449

24374
VOLPE AND KOENIG, P.C.
DEPT. ICC
UNITED PLAZA, SUITE 1600
30 SOUTH 17TH STREET
PHILADELPHIA, PA 19103

Date Mailed: 04/19/2007

NOTICE OF ACCEPTANCE OF POWER OF ATTORNEY

This is in response to the Power of Attorney filed 03/16/2007.

The Power of Attorney in this application is accepted. Correspondence in this application will be mailed to the above address as provided by 37 CFR 1.33.

Kimberly Gravinet

Office of Initial Patent Examination (571) 272-4000, or 1-800-PTO-9199

ATTORNEY/APPLICANT COPY

UNITED STATES PATENT AND TRADEMARK OFFICE

UNITED STATES DEPARTMENT OF COMMERCE
United States Patent and Trademark Office
Address: COMMISSIONER FOR PATENTS
P.O. Box 1450
Alexandria, Virginia 22313-1450
www.uspto.gov

APPLICATION NUMBER	FILING OR 371 (c) DATE	FIRST NAMED APPLICANT	ATTY. DOCKET NO./TITLE
10/895,813	07/20/2004	Bing Chiang	2479.2186-001

CONFIRMATION NO. 7745

OC000000023467372

21005
HAMILTON, BROOK, SMITH & REYNOLDS, P.C.
530 VIRGINIA ROAD
P.O. BOX 9133
CONCORD, MA 01742-9133

Date Mailed: 04/19/2007

NOTICE REGARDING CHANGE OF POWER OF ATTORNEY

This is in response to the Power of Attorney filed 03/16/2007.

- The Power of Attorney to you in this application has been revoked by the assignee who has intervened as provided by 37 CFR 3.71. Future correspondence will be mailed to the new address of record(37 CFR 1.33).

Kimberly Brabinet

Office of Initial Patent Examination (571) 272-4000, or 1-800-PTO-9199

FORMER ATTORNEY/AGENT COPY

UNITED STATES PATENT AND TRADEMARK OFFICE

Commissioner for Patents
United States Patent and Trademark Office
P.O. Box 1450
Alexandria, VA 22313-1450
www.uspto.gov

SUGHRUE-265550
2100 PENNSYLVANIA AVE. NW
WASHINGTON, DC 20037-3213

COPY MAILED
FEB 26 2010

In re Application of :
Kunihiko Kodama :
Application No. 10/895,824 : ON PETITION
Filed: July 22, 2004 :
Attorney Docket No. Q82630

This is a decision on the petition, filed February 25, 2010 under 37 CFR 1.313(c)(2) to withdraw the above-identified application from issue after payment of the issue fee.

The petition is **GRANTED**.

The above-identified application is withdrawn from issue for consideration of a submission under 37 CFR 1.114 (request for continued examination). See 37 CFR 1.313(c)(2).

Petitioner is advised that the issue fee paid on January 8, 2010 in the above-identified application cannot be refunded. If, however, the above-identified application is again allowed, petitioner may request that it be applied towards the issue fee required by the new Notice of Allowance.[1]

Telephone inquiries should be directed to Irvin Dingle at (571) 272-3210.

This matter is being referred to Technology Center AU 1795 for processing of the request for continued examination under 37 CFR 1.114 and for consideration of the concurrently filed Information Disclosure Statement.

/Irvin Dingle/
Irvin Dingle
Petitions Examiner
Office of Petitions

---

[1] The request to apply the issue fee to the new Notice may be satisfied by completing and returning the new Issue Fee Transmittal Form PTOL-85(b), which includes the following language thereon: Commissioner for Patents is requested to apply the Issue Fee and Publication Fee (if any) or re-apply any previously paid issue fee to the application identified above. Petitioner is advised that, whether a fee is indicated as being due or not, the Issue Fee Transmittal Form **must** be completed and timely submitted to avoid abandonment. Note the language in bold text on the first page of the Notice of Allowance and Fee(s) Due (PTOL-85).

SPE RESPONSE FOR CERTIFICATE OF CORRECTION

Paper No.: _____

DATE : 05/24/06

TO SPE OF : ART UNIT 3765

SUBJECT : Request for Certificate of Correction for Appl. No.: 10/895876 Patent No.: **7021340**

Please respond to this request for a certificate of correction within 7 days.

Please review the requested changes/corrections as shown in the **COCIN** document(s) in the IFW application image. No new matter should be introduced, nor should the scope or meaning of the claims be changed.

Please complete the response (see below) and forward the completed response to scanning using document code **COCX**.

A Green

Angela Green

Certificates of Correction Branch

703-308-9390 ext. 183

Thank You For Your Assistance

The request for issuing the above-identified correction(s) is hereby:

Note your decision on the appropriate box.

- ☑ **Approved** — **All** changes apply.
- ☐ **Approved in Part** — Specify below which changes **do not** apply.
- ☐ **Denied** — State the reasons for denial below.

Comments: _____

_____

_____

_____

_____

[signature] 3765

SPE **Art Unit**

10/895876

C of C

OIPE IAP56 MAY 11 2006 PATENT & TRADEMARK OFFICE

PATENT
Customer No. 22,852
Attorney Docket No. 96135.0001-00000

IN THE UNITED STATES PATENT AND TRADEMARK OFFICE

In re U.S. Patent No.: 7,021,340	)
Inventor: Jennifer J. MAYSTER	)
Issue Date.: April 4, 2006	)
For: METHOD OF AND LOOM FOR TEACHING BRAILLE	)

Certificate
MAY 16 2006
of Correction

Commissioner for Patents
P.O. Box 1450
Alexandria, VA 22313-1450

Sir:

REQUEST FOR CERTIFICATE OF CORRECTION

Pursuant to 35 U.S.C. § 255, and 37 C.F.R. § 1.323, this is a request for a Certificate of Correction in the above-identified patent. The mistakes identified in the appended Form are of a clerical or typographical nature, or of minor character, and resulted from an error made in good faith by patentee(s). Please charge the $100 fee set forth in 37 C.F.R. § 1.20(a) to our Deposit Account No. 06-0916 and charge any additional fees due in connection with the filing of this request to Deposit Account No. 06-0916.

05/12/2006 SZEWDIE1 00000056 060916 7021340
01 FC:1811 100.00 DA

MAY 16 2006

Two (2) copies of PTO Form 1050 are appended. The complete Certificate of Correction involves two (2) pages. Issuance of the Certificate of Correction containing the correction is earnestly requested.

Respectfully submitted,

FINNEGAN, HENDERSON, FARABOW,
GARRETT & DUNNER, L.L.P.

Dated: May 10, 2006

By: Kristin L. Menon
Kristin L. Menon
Reg. No. 56,869

Finnegan Henderson Farabow
Garrett & Dunner L.L.P.
901 New York Ave., N.W.
Washington, D.C. 20001
Attorney direct (650) 849-6679

MAY 16 2006

UNITED STATES PATENT AND TRADEMARK OFFICE

CERTIFICATE OF CORRECTION

PATENT NO. 7,021,340

DATED: April 4, 2006

INVENTORS: Jennifer J. Mayster

It is hereby certified that errors appear in the above-identified patent and that said Letters Patent is hereby corrected as shown below: .

Col. 2, line 6: "down an under," should be "down and under"

Col. 2, line 10: "*Ward*" should be "*Warp*"

Col. 2, lines 10, 11, 31, and 47: "LeClerc" should be "Leclerc"

Col. 3, lines 29 and 51: "LeClerc" should be "Leclerc"

Col. 4, line 27: "lever 22" should be "lever 34"

Col. 4, line 29: "lever 24" should be "lever 36"

Col. 4, line 32: "lever 26" should be "lever 38"

MAILING ADDRESS OF SENDER

Finnegan, Henderson, Farabow,
Garrett & Dunner, L.L.P.
901 New York Avenue, N.W.
Washington, D.C. 20001-4413

Patent No. 7,021,340

No. of additional copies
@ .30¢ per page

MAY 16 2006

UNITED STATES PATENT AND TRADEMARK OFFICE

CERTIFICATE OF CORRECTION

PATENT NO. 7,021,340

DATED: April 4, 2006

INVENTORS: Jennifer J. Mayster

It is hereby certified that errors appear in the above-identified patent and that said Letters Patent is hereby corrected as shown below:

Col. 2, line 6: "down an under," should be "down and under"

Col. 2, line 10: "*Ward*" should be "*Warp*"

Col. 2, lines 10, 11, 31, and 47: "LeClerc" should be "Leclerc"

Col. 3, lines 29 and 51: "LeClerc" should be "Leclerc"

Col. 4, line 27: "lever 22" should be "lever 34"

Col. 4, line 29: "lever 24" should be "lever 36"

Col. 4, line 32: "lever 26" should be "lever 38"

MAILING ADDRESS OF SENDER

Finnegan, Henderson, Farabow,
Garrett & Dunner, L.L.P.
901 New York Avenue, N.W.
Washington, D.C. 20001-4413

Patent No. 7,021,340

No. of additional copies
@ .30¢ per page

MAY 16 2006

UNITED STATES PATENT AND TRADEMARK OFFICE

UNITED STATES DEPARTMENT OF COMMERCE
United States Patent and Trademark Office
Address: COMMISSIONER FOR PATENTS
P.O. Box 1450
Alexandria, Virginia 22313-1450
www.uspto.gov

YOUNG & THOMPSON
209 Madison Street
Suite 500
Alexandria, VA 22314

Mail Date: 04/20/2010

Applicant	: Alan Mole	: DECISION ON REQUEST FOR
Patent Number	: 7604774	: RECALCULATION of PATENT
Issue Date	: 10/20/2009	: TERM ADJUSTMENT IN VIEW
Appliction No	: 10/895,888	: OF WYETH AND NOTICE OF INTENT TO
Filed	: 07/22/2004	: ISSUE CERTIFICATE OF CORRECTION
		:

The Request for Recalculation is **GRANTED** to the extent indicated.

The patent term adjustment has been determined to be **694** days. The USPTO will *sua sponte* issue a certificate of correction reflecting the amount of PTA days determined by the recalculation.

Prior to the issuance of the certificate of correction, the USPTO will afford patentee an opportunity to be heard and request reconsideration. Accordingly, patentee has **one month or thirty (30) days**, whichever is longer, to file a request for reconsideration of this patent term adjustment calculation. See 35 U.S.C. 154(b)(3)(B)(ii) and 37 CFR 1.322(a)(4). No extensions of time will be granted under 37 CFR 1.136.

Patentee should use document code PET.OP if electronically filing a request for reconsideration of this patent term adjustment calculation. The patentee must also include the information required by 37 CFR 1.705(b)(2) and the fee required by 37 CFR 1.18(e). If patentee does not file a timely request for reconsideration of this patent term adjustment calculation including the information required by 37 CFR 1.705(b)(2) and the fee required by 37 CFR 1.18(e), the USPTO will issue a certificate of correction reflecting the PTA determination noted above.

Patentee should be aware that in order to preserve the right to review in the United States District Court for the District of Columbia of the USPTO patent term adjustment determination, patentee must ensure that he or she also take the steps required under 35 U.S.C. 154(b)(4)(A) in a timely manner. Nothing in the request for recalculation should be construed as providing an alternative time frame for commencing a civil action under 35 U.S.C. 154(b)(4)(A).

Any questions concerning this decision should be directed to the Office of Patent Legal Administration at 571-272-7702.

UNITED STATES PATENT AND TRADEMARK OFFICE

Commissioner for Patents
United States Patent and Trademark Office
P.O. Box 1450
Alexandria, VA 22313-1450
www.uspto.gov

Intellectual Property Department
Amylin Pharmaceuticals, Inc.
9360 Towne Centre Drive
San Diego, CA 92121

COPY MAILED

APR 02 2009

OFFICE OF PETITIONS

In re Application of Young et al. :
Application No. 10/895,909 :
Filing Date: July 20, 2004 :
Attorney Docket No. 0222-CON2-0 :

Decision on Petition

This is a decision on the petition under 37 CFR 1.182, filed April 22, 2008, and supplemented February 4, 2009, to withdraw the Terminal Disclaimer filed August 6, 2007.

The petition is **dismissed**.

Facts

A preliminary amendment filed with the original application papers canceled claims 1 to 31 and added claims 32 to 77.

The Examiner mailed a non-final Office including a restriction requirement on January 12, 2007. The examiner identified three distinct inventions:

(a) Group I consisted of claims (32-75) involving methods of treating obesity and reducing body weight.
(b) Group II consisted of a claim (76) involving a method to reduce food intake.
(c) Group III consisted of a claim involving a method to reduce appetite.

On February 9, 2007, petitioner elected Group I.

On March 7, 2007, the Office mailed a non-final Office action. The Office action stated the examiner had determined Group I and Group II were not patentably distinct inventions. The Office action stated the claims 32 to 76 would be examined.

The March 7, 2007 Office action stated,

> Claims 32-76 are rejected under the judicially created doctrine of obviousness-type double patenting as being unpatentable over claims 33-41 and 43-46 of U.S. Patent No. 6956026....

> Claims 32-76 are rejected under the judicially created doctrine of obviousness-type double patenting as being unpatentable over claims 33-39 and 43-46 of U.S. Patent No. 7115569....
>
> Claims 32-76 are rejected under the judicially created doctrine of obviousness-type double patenting as being unpatentable over claims 1-7, 11-14, and 18 of U.S. Patent No. 6,989,366.

On August 6, 2007, petitioner filed a terminal disclaimer addressing the obviousness-type double patenting rejection of claims 32-76.

On October 1, 2007, the Office mailed a non-final Office action. The Office action stated the terminal disclaimer had been entered and accepted. As a result of petitioner filing the terminal disclaimer, the Office action withdrew the rejections of claims 32-76 based on obviousness-type double patenting. The Office action stated, "Claims 32-42, 46, 54-64 and 68 are not allowed. Claims 43-45, 47-53, 65-67 and 69-76 are free from prior art."

On December 6, 2007, petitioner filed an amendment canceling claims 1-76 and adding claims 78-127. The remarks section of the amendment indicated:

(a) New claims 78-89 were supported by previous claims 32-42 and specified sections of the specification,
(b) New claims 90-101 were supported by previous claims 43-53 and specified sections of the specification,
(c) New claims 102-113 were supported by previous claims 54-64 and specified sections of the specification,
(d) New claims 114-125 were supported by previous claims65-75 and specified sections of the specification, and
(e) New claims 126-127 were supported by previous claim 76 and specified sections of the specification.

On January 23, 2008, the examiner mailed a final Office action. In the Office action, the examiner indicated claims 126-127 were withdrawn from consideration because the claims were patentably distinct from the remaining claims..

On February 4, 2008, petitioner filed a Request for Continued Examination and an amendment. The February 4, 2008 amendment cancelled claims 1-127 and added claims 128-175. The new claims included claims 149-157 which involved methods to reduce food intake (Group II).

On March 18, 2008, the examiner mailed a non-final Office action. The Office action stated claims 148-157 were withdrawn from consideration because they were directed to the subject matter of reducing food intake.

The instant petition was filed April 22, 2008, and supplemented February 4, 2009. The amendment filed with the petition on April 22, 2008, does not appear to add any claims involving methods to reduce food intake.

The petition alleges, in essence, that the basis for the requirement for the terminal disclaimer filed August 6, 2007, is no longer necessary for two reasons:

(1) The examiner has determined claims directed to methods for reduction of food intake (Group II) are patentably distinct from the claims in Group I; and
(2) The claims directed to methods for reduction of food intake have been cancelled.

The petition requests withdrawal of the terminal disclaimer filed August 6, 2007.

Discussion

The examiner has reviewed the application and asserts the prior obviousness-type double rejection continues to apply to the claims at issue and that withdrawal of the terminal disclaimer would be inappropriate.

The Office of Petitions is not the forum for the resolution of a dispute between an examiner and applicants regarding the continuing necessity of a terminal disclaimer. Specifically, it is the long-established policy of the Patent and Trademark Office to maintain the line of demarcation between petitionable and appealable subject matter. MPEP 1201. When the question of whether or not a given set of claims in one application or patent is distinct, or lies within the aegis of 35 USC 121, from another set of claims in another application or patent with respect to obviousness double patenting arises, that question relates to the merits of an invention. See e.g. In re Longi, 759 F.2d 887, 225 USPQ 645 (Fed. Cir. 1985). As noted by the court in In re Faust, 378 F.2d 966, 153 USPQ 813 (CCPA 1967) "the terminal disclaimer eliminates the necessity of considering what are most often exceedingly difficult questions. i.e., whether the subject matter of the appealed claims is obvious in view of the patent claims relied on as the basis for 'double patenting,' thus conserving judicial man hours both here and in the Patent Office." Further, it is well settled that the Commissioner will not, on petition, usurp the functions or impinge upon the jurisdiction of the Board. See In re Dickerson, 299 F.2d 954, 958, 133 USPQ 39, 43 (CCPA 1962); Bayley's Restaurant v. Bailey's of Boston, Inc., 170 USPQ 43, 44 (Comm'r Pat. 1971).

In view of the discussion above, the petition will not be granted.

Petitioner may wish to take note of MPEP 1490 which states in part, "The filing of a continuation application other than a CPA, while abandoning the application in which the terminal disclaimer has been filed, will typically nullify the effect of a terminal disclaimer."

Telephone inquiries regarding this communication should be directed to Petitions Attorney Steven Brantley at (571) 272-3203.

Charles Steven Brantley
Senior Petitions Attorney
Office of Petitions

UNITED STATES PATENT AND TRADEMARK OFFICE

Commissioner for Patents
United States Patent and Trademark Office
P.O. Box 1450
Alexandria, VA 22313-1450
www.uspto.gov

Paper No.

BERESKIN AND PARR
LLP/S.E.N.C.R.L., s.r.l.
40 KING STREET WEST
BOX 401
TORONTO ON M5H 3Y2
CANADA

MAILED

JUN 22 2009

OFFICE OF PETITIONS

In re Application of	:	
Adams et al.	:	
Application No. 10/895,991	:	ON APPLICATION FOR
Filed: July 22, 2004	:	PATENT TERM ADJUSTMENT
Atty Docket No. 13210-837/KL	:	

This is in response to the APPLICATION FOR PATENT TERM ADJUSTMENT filed March 11, 2009. Applicants request that the patent term adjustment be increased from 531 days to 841 days. Relying on Wyeth v. Dudas, 580 F. Supp. 2d 138, 88 U.S.P.Q. 2d 1538 (D.D.C. 2008), applicants request this correction on the basis that the Office will take in excess of three years to issue this patent (and considering the filing of a Request for Continued Examination on May 28, 2008).

As the instant application for patent term adjustment requests reconsideration of the patent term adjustment as it relates to the Office's failure to issue the patent within 3 years of the filing date, a decision is being **held in abeyance** until after the actual patent date. Knowledge of the actual date the patent issues is required to calculate the amount, if any, of additional patent term patentee is entitled to for Office failure to issue the patent within 3 years. See § 1.703(b). (This is true even in this instance where a request for continued examination (RCE) was filed. The computer will not undertake the § 1.703(b) calculation until the actual date of issuance of the patent has been determined. Accordingly, it is still too soon to make a determination as to the correctness of

any period of adjustment that will or will not be entered pursuant to § 1.703(b)).

Applicant is given TWO (2) MONTHS from the issue date of the patent to file a written request for reconsideration of the patent term adjustment for Office failure to issue the patent within 3 years. A copy of this decision should accompany the request. Applicant may seek such consideration without payment of an additional fee. However, as to all other bases for seeking reconsideration of the patent term adjustment indicated in the patent, all requirements of § 1.705(d) must be met. Requests for reconsideration on other bases must be timely filed and must include payment of the required fee.

Rather than file the request for reconsideration of Patent Term Adjustment at the time of the mailing of the notice of allowance, applicant is advised that they may wait until the time of the issuance of the patent and file a request for reconsideration of the patent term pursuant to 37 CFR 1.705(d). The USPTO notes that it does not calculate the amount of time earned pursuant to 37 CFR 1.702(b) until the time of the issuance of the patent and accordingly, the Office will consider any request for reconsideration of the patent term adjustment due to an error in the calculation of 37 CFR 1.702(b) to be timely if the request for reconsideration is filed within two months of the issuance of the patent.

It is acknowledged that any period of adjustment will be entered in light of 35 U.S.C. 154(B) GUARANTEE OF NO MORE THAN 3-YEAR APPLICATION PENDENCY, which provides that:

> Subject to the limitations under paragraph (2), if the issue of an original patent is delayed due to the failure of the United States Patent and Trademark Office to issue a patent within 3 years after the actual filing date of the application in the United States, not including —
>
> (i) any time consumed by continued examination of the application requested by the applicant under section 132(b);

It is noted that a Request for Continued Examination (RCE) was first filed in this application on May 28, 2008.

The determination of the patent term adjustment at the time of the mailing of the notice of allowance remains five hundred thirty-one (531) days.

The Office acknowledges submission of the $200.00 fee set forth in 37 CFR 1.18(e). No additional fees are required.

Applicants are reminded that any delays by the Office pursuant to 37 CFR 1.702(a)(4)(as well as, 1.702(b)) and any applicant delays under 37 CFR 1.704(c)(10) will be calculated at the time of the issuance of the patent and applicants will be notified of the revised patent term adjustment to be indicated on the patent in the Issue Notification letter that is mailed to applicants approximately three weeks prior to issuance.

The Office of Data Management has been advised of this decision. This matter is being referred to the Office of Data Management for issuance of the patent.

Telephone inquiries specific to this decision should be directed to the undersigned at (571) 272-3219.

Nancy Johnson

Nancy Johnson
Senior Petitions Attorney
Office of Petitions

UNITED STATES PATENT AND TRADEMARK OFFICE

COMMISSIONER FOR PATENTS
UNITED STATES PATENT AND TRADEMARK OFFICE
P.O. BOX 1450
ALEXANDRIA, VA 22313-1450
www.uspto.gov

PILLSBURY WINTHROP SHAW PITTMAN, LLP
P.O. BOX 10500
MCLEAN, VA 22102

FAX RECEIVED
MAY 26 2005
OFFICE OF PETITIONS

In re Application of :
Mandeep Singh, et al. :
Application No. 10/896,020 : ON PETITION
Filed: July 22, 1994 :
Attorney Docket No. 081468-0309956 :

This is a decision on the petition, filed May 20, 2005, under 37 CFR 1.313(c)(2) to withdraw the above-identified application from issue after payment of the issue fee.

The petition is **GRANTED**.

The above-identified application is withdrawn from issue for consideration of a submission under 37 CFR 1.114 (request for continued examination). See 37 CFR 1.313(c)(2).

Petitioner is advised that the issue fee paid on May 12, 2005, in the above-identified application cannot be refunded. If, however, the above-identified application is again allowed, petitioner may request that it be applied towards the issue fee required by the new Notice of Allowance. [1]

Telephone inquiries relating to this decision should be directed to the undersigned at (571) 272-3204.

The application is being referred to Technology Center AU 2851 for further processing of the request for continued examination under 37 CFR 1.114.

Sherry D. Brinkley
Petitions Examiner
Office of Petitions
Office of the Deputy Commissioner
for Patent Examination Policy

[1]The request to apply the issue fee to the new Notice may be satisfied by completing and returning the new Issue Fee Transmittal Form PTOL-85(b), which includes the following language thereon: "Commissioner for Patents is requested to apply the Issue Fee and Publication Fee (if any) or re-apply any previously paid issue fee to the application identified above." Petitioner is advised that, whether a fee is indicated as being due or not, the Issue Fee Transmittal Form **must** be completed and timely submitted to avoid abandonment. Note the language in bold text on the first page of the Notice of Allowance and Fee(s) Due (PTOL-85).

UNITED STATES PATENT AND TRADEMARK OFFICE

COMMISSIONER FOR PATENTS
UNITED STATES PATENT AND TRADEMARK OFFICE
P.O. BOX 1450
ALEXANDRIA, VA 22313-1450
www.uspto.gov

MCGINN & GIBB, PLLC
8321 OLD COURTHOUSE ROAD
SUITE 200
VIENNA VA 22182-3817

COPY MAILED

DEC 17 2004

OFFICE OF PETITIONS

In re Application of	:	
Hidehei Kageyama, et al.	:	
Application No. 10/896,024	:	NOTICE
Filed: July 22, 2004	:	
Attorney Docket No. 69		

This is a notice regarding your request for acceptance of a fee deficiency submission under 37 CFR 1.28. On September 1, 1998, the Court of Appeals for the Federal Circuit held that 37 CFR 1.28(c) is the sole provision governing the time for correction of the erroneous payment of the issue fee as a small entity. **See DH Technology v. Synergystex International, Inc. 154 F.3d 1333, 47 USPQ2d 1865 (Fed. Cir. Sept. 1, 1998).**

The Office no longer investigates or rejects original or reissue applications under 37 CFR 1.56. **1098 Off. Gaz. Pat. Office 502 (January 3, 1989)**. Therefore, nothing in this Notice is intended to imply that an investigation was done.

Your fee deficiency submission under 37 CFR 1.28 is hereby **ACCEPTED**.

Inquiries related to this communication should be directed to the Office of Petitions Staff at (571) 272-3201.

This file is being forwarded to Technology Center 2655 for examination in due course.

Sherry D. Brinkley
Petitions Examiner
Office of Petitions
Office of the Deputy Commissioner
for Patent Examination Policy

UNITED STATES PATENT AND TRADEMARK OFFICE

Commissioner for Patents
United States Patent and Trademark Office
P.O. Box 1450
Alexandria, VA 22313-1450
www.uspto.gov

COPY MAILED

NOV 2 6 2008

OFFICE OF PETITIONS

BRUCE H. TROXELL
SUITE 1404
5205 LEESBURG PIKE
FALLS CHURCH, VA 22041

In re Application of Jan-Tang Wu, et al. Application No. 10/896,032 Filed: July 22, 2004 Attorney Docket No. BHT/3111-499	: : : : :	ON PETITION

This is a decision on the petition under 37 CFR 1.137(b) to revive the above-identified application, filed August 28, 2008.

The petition is **GRANTED**.

The application became abandoned for failure to timely pay the issue and publication fees on or before June 19, 2008, as required by the Notice of Allowance and Fee(s) Due, mailed March 19, 2008, which set a statutory period for reply of three (3) months. Accordingly, the application became abandoned on June 20, 2008. On July 22, 2008, a Notice of Abandonment was mailed. On August 28, 2008 the present petition was filed. .

The petition satisfies the requirements of 37 CFR 1.137(b) in that petitioner has supplied (1) the reply in the form of the $1,440 issue fee and $300 publication fee; (2) the petition fee of $1,540; and (3) an adequate statement of unintentional delay.

The application is being referred to the Office of Data Management to be processed into a patent.

Telephone inquires related to this decision should be directed to the undersigned at (571) 272-3204. Telephone inquiries related to processing as a patent should be directed to (571) 272-4200.

Sherry D. Brinkley
Petitions Examiner
Office of Petitions

UNITED STATES PATENT AND TRADEMARK OFFICE

Commissioner for Patents
United States Patent and Trademark Office
P.O. Box 1450
Alexandria, VA 22313-1450
www.uspto.gov

OCT 16 2006

09222006

JACOBSON HOLMAN PLLC
400 SEVENTH STREET N.W.
SUITE 600
WASHINGTON DC 20004

In re Application of	:	
LOW et al	:	DECISION ON PETITION
Application No. 10/896,041	:	
Filed: July 22, 2004	:	
For: SEMICONDUCTOR PACKAGE	:	

This is a decision on the petition filed January 9, 2006, requesting that the holding of abandonment in the above-identified application be withdrawn.

The petition to withdraw the holding of abandonment is GRANTED.

This application was held abandoned for failure to timely reply to the Election/Restriction Requirement Office action mailed June 8, 2005, setting a one-month period of response. A Notice of Abandonment was mailed on December 19, 2005.

Petitioner asserts that a response to the Election/Restriction Requirement Office action was timely filed in the US Patent and Trademark Office (USPTO) on July 5, 2005. This is evidenced by the post card receipt indicating receipt of a response to the Office action on July 5, 2005.

The response to the Election/Restriction Requirement Office action acknowledged as having been received in the USPTO on July 5, 2005 is not of record in the application file and has been located in patent application serial number 10/696041. The response did not correctly identify the patent application serial number for which it was intended and thus neither the examiner nor the technical support staff were aware that it had been filed. Consequently the application was held to be abandoned. The application is not abandoned in fact.

The response to the Election/Restriction Requirement Office action received July 5, 2005 has been matched with the file.

For the above reasons, the Notice of Abandonment is hereby vacated and the holding of abandonment withdrawn.

The application file is being forwarded to the technical support staff for processing the response to the June 8, 2005 Office action. From there, it will be returned to the examiner for further prosecution.

Questions regarding this decision should be directed to Jose' G. Dees at (571) 272-1569.

Sharon Gibson, Director
Technology Center 2800
Semiconductor, Electrical and Optical
Systems and Components

UNITED STATES PATENT AND TRADEMARK OFFICE

COMMISSIONER FOR PATENTS
UNITED STATES PATENT AND TRADEMARK OFFICE
P.O. BOX 1450
ALEXANDRIA, VA 22313-1450
www.uspto.gov

COPY MAILED
DEC 18 2008

BRINKS HOFER GILSON & LIONE
P.O. BOX 10395
CHICAGO IL 60610

In re Patent No. 7,365,948	: DECISION ON APPLICATION FOR
Issued: April 29, 2008	: PATENT TERM ADJUSTMENT
Application No. 10/896,084	:
Filed: July 21, 2004	:
Dkt. No.: 9281-4851	:

This is a decision on the "REQUEST FOR RECONSIDERATION OF PATENT TERM ADJUSTMENT PURSUANT," filed June 30, 2008. This matter is being properly treated as an application for patent term adjustment in accordance with 37 CFR 1.705(d).

The application for patent term adjustment ("PTA") under 37 CFR 1.705(d) is **DISMISSED**.

The above-identified application matured into U.S. Patent No. 7,365,948 on April 29, 2008. The instant request for reconsideration was timely filed in accordance with 37 C.F.R. § 1.705(d). The patent issued with a PTA of 463 days. Patentees argue that the patent is entitled to an adjustment of 746 days pursuant to 37 CFR 1.703(b).

At the time of issuance, the patent was entitled to 463 days of adjustment, as reflected on the patent.

Patentee argues that the patent is entitled to an additional adjustment of 283 days in accordance with 37 CFR 1.703(b) for failure to issue the patent within three years of the date upon which the application for patent was filed.

Patentee's arguments have been carefully considered, but are not convincing.

If an application is entitled to an adjustment under 35 U.S.C. 154(b)(1)(B) (and 37 C.F.R. § 1.704(b)), the entire period during which the application was pending (except for periods excluded under 35 U.S.C. 154(b)(1)(B)(i)-(iii)), and not just the period beginning three years after the actual filing date of the application, is the period of delay under 35 U.S.C.

154(b)(1)(B) in determining whether periods of delay overlap under 35 U.S.C. 154(b)(2)(A). Thus, any days of delay for Office issuance of the application that overlap with the days of patent term adjustment accorded prior to the issuance of the patent will not result in any additional patent term adjustment. *See,* 35 U.S.C. 154(b)(1)(B), 35 U.S.C. 154(b)(2)(A), and 37 CFR § 1.703(f). *See, also, Revision of Patent Term Extension and Patent Term Adjustment Provisions; Final Rule,* 69 Red. Reg. 21704 (April 22, 2004).

In view thereof, the instant patent is not entitled to further adjustment.

Any request for reconsideration of this decision must be submitted within two months of the mail date of the instant decision. The time period for reconsideration may not be extended pursuant to 37 CFR 1.136.

The required patent term adjustment application fee of $200.00 has been charged to patentee's deposit account, as authorized.

Telephone inquiries specific to this matter may be directed to Petitions Attorney Alesia M. Brown at (571) 272-3205.

Kery A Fries

Kery Fries
Senior Patent Attorney
Office of Patent Legal Administration
Office of Deputy Commissioner
for Patent Examination Policy

UNITED STATES PATENT AND TRADEMARK OFFICE

Commissioner for Patents
United States Patent and Trademark Office
P.O. Box 1450
Alexandria, VA 22313-1450
www.uspto.gov

KLEIN, O'NEILL & SINGH, LLP
43 CORPORATE PARK
SUITE 204
IRVINE CA 92606

COPY MAILED

JUL 2 0 2007

OFFICE OF PETITIONS

In re Application of

WITCHEY, Nicholas J.
Application No. 10/896,088
Filed: July 21, 2004
Attorney Docket No. **904-04-PA-T**

DECISION ON PETITION
TO WITHDRAW
FROM RECORD

This is a decision on the Request to Withdraw as attorney or agent of record under 37 C.F.R. § 1.36(b), filed May 24, 2007.

The request is **APPROVED**.

A grantable request to withdraw as attorney/agent of record must be signed by every attorney/agent seeking to withdraw or contain a clear indication that one attorney is signing on behalf of another/others. A request to withdraw will not be approved unless at least 30 (thirty) days would remain between the date of approval and the later of the expiration date of a time to file a response or the expiration date of the maximum time period which can be extended under 37 C.F.R. § 1.136(a).

The request was signed by Tejinder Singh on behalf of all attorneys of record. All attorneys/agents associated have been withdrawn. Applicant is reminded that there is no attorney of record at this time.

The request to change the correspondence of record is not acceptable as the requested correspondence address is not that of: (1) the first named signing inventor; or (2) an intervening assignee of the entire interest under 37 C.F.R 3.71: All future communications from the Office will be directed to the first named signing inventor.

There are no outstanding office actions at this time.

Telephone inquiries concerning this decision should be directed to Michelle R. Eason at 571-272-4231.

Terri Williams

TerriWilliams
Petitions Examiner
Office of Petitions

cc: **NICHOLAS J. WITCHEY**
24832 HON AVENUE
LAGUNA HILLS, CA 92653

cc: **RUTAN & TUCKER**
611 ANTON BLVD, SUITE 1400
COSTA MESA, CA 92626

UNITED STATES PATENT AND TRADEMARK OFFICE

UNITED STATES DEPARTMENT OF COMMERCE
United States Patent and Trademark Office
Address: COMMISSIONER FOR PATENTS
P.O. Box 1450
Alexandria, Virginia 22313-1450
www.uspto.gov

Boston Scientific Corporation
c/o Frommer Lawrence & Haug LLP
745 Fifth Avenue
New York, NY 10151

Mail Date: 04/21/2010

Applicant	: Shashidhar Sathyanarayana	: DECISION ON REQUEST FOR
Patent Number	: 7578790	: RECALCULATION of PATENT
Issue Date	: 08/25/2009	: TERM ADJUSTMENT IN VIEW
Appliction No	: 10/896,104	: OF WYETH AND NOTICE OF INTENT TO
Filed	: 07/20/2004	: ISSUE CERTIFICATE OF CORRECTION
		:

The Request for Recalculation is **GRANTED** to the extent indicated.

The patent term adjustment has been determined to be **526** days. The USPTO will *sua sponte* issue a certificate of correction reflecting the amount of PTA days determined by the recalculation.

Prior to the issuance of the certificate of correction, the USPTO will afford patentee an opportunity to be heard and request reconsideration. Accordingly, patentee has **one month or thirty (30) days**, whichever is longer, to file a request for reconsideration of this patent term adjustment calculation. See 35 U.S.C. 154(b)(3)(B)(ii) and 37 CFR 1.322(a)(4). No extensions of time will be granted under 37 CFR 1.136.

Patentee should use document code PET.OP if electronically filing a request for reconsideration of this patent term adjustment calculation. The patentee must also include the information required by 37 CFR 1.705(b)(2) and the fee required by 37 CFR 1.18(e). If patentee does not file a timely request for reconsideration of this patent term adjustment calculation including the information required by 37 CFR 1.705(b)(2) and the fee required by 37 CFR 1.18(e), the USPTO will issue a certificate of correction reflecting the PTA determination noted above.

Patentee should be aware that in order to preserve the right to review in the United States District Court for the District of Columbia of the USPTO patent term adjustment determination, patentee must ensure that he or she also take the steps required under 35 U.S.C. 154(b)(4)(A) in a timely manner. Nothing in the request for recalculation should be construed as providing an alternative time frame for commencing a civil action under 35 U.S.C. 154(b)(4)(A).

Any questions concerning this decision should be directed to the Office of Patent Legal Administration at 571-272-7702.

SPE RESPONSE FOR CERTIFICATE OF CORRECTION

Paper No.: X

DATE : November 08,2007

TO SPE OF : ART UNIT 2819

SUBJECT : Request for Certificate of Correction for Appl. No.: 10/896,139 Patent No.: 7116129 B2

A response is requested with respect to a request for a certificate of correction.

With respect to the change(s) requested to correct Office and/or Applicant's errors, should the patent read as shown in the certificate of correction attached herewith or the COCIN document(s), in IFW images for the above-identified patented application? No new matter should be introduced, nor should the scope or meaning of the claims be changed.

If the response is for an IFW, within 7 days, please complete and forward the response, to the employee (named below) via scanning into application images, using document code COCX.

DO NOT SENT TO ATTORNEY

If the response is for a paper file wrapper, please complete the response and forward the response with the paper file wrapper, to the employee (named below), within 7 days, to:

Certificates of Correction Branch (CofC)
South Tower - 9A22
Palm Location 7580

You can fax the Directors/SPE response to 571-270-9990

LAMONTE NEWSOME

Certificates of Correction Branch

703-308-9390 ext. 112

Thank You For Your Assistance

The request for issuing the above-identified correction(s) is hereby:
Note your decision on the appropriate box.

- [x] **Approved** — **All** changes apply.
- [ ] **Approved in Part** — Specify below which changes **do not** apply.
- [ ] **Denied** — State the reasons for denial below.

Comments: Correction made to correct typographical nature occurred in printing.

Renford Bonne SPE 2819 01/07/08

PTOL-306 (REV. 7/03) U.S. DEPARTMENT OF COMMERCE Patent and Trademark Office

UNITED STATES PATENT AND TRADEMARK OFFICE

Commissioner for Patents
United States Patent and Trademark Office
P.O. Box 1450
Alexandria, VA 22313-1450
www.uspto.gov

MAILED

AUG 1 1 2005

Director's Office
Group 3700

Craig A. Gelfound
2049 Century Park East
Suite 3400
Los Angeles, CA 90067

In re application of
Stanley W. Epstein

Serial Number: 10/896,145
Filed: July 21, 2004

DECISION ON PETITION TO MAKE SPECIAL UNDER 37 CFR. 1.102(c)

For: **ONBOARD SUPPLEMENTAL POWER SYSTEM AT VARYING HIGH ALTITUDES**

This is a decision on the petition filed on February 10, 2005, under 37 CFR. 1.102(c) to make special the above identified application because of the age/health of the applicant. Since the requirements of the M.P.E.P Section 708.02 IV have been met, the petition will be GRANTED.

The examiner is directed (1) to make an interference search for possible interfering applications, (2) to promptly examine this application out of turn, and (3) if any interfering application is discovered, to examine such application simultaneously and state in the first official letter of such application that it is being taken out of turn because of a possible interference.

Petitioner is advised that this application will continue to be special, throughout its entire prosecution and pendency, including interference or appeal, if any, only is Petitioner makes a prompt bona-fide effort, in response to each Office action, to place the application in condition for allowance, even if it is necessary to conduct an interview with the Examiner to accomplish this purpose.

Summary: Decision on Petition **GRANTED**.

Richard A. Bertsch
Director
Technology Center 3700
(571) 272-3750

rt: 8/11/05

UNITED STATES PATENT AND TRADEMARK OFFICE

Commissioner for Patents
United States Patent and Trademark Office
P.O. Box 1450
Alexandria, VA 22313-1450
www.uspto.gov

Paper No. 031705

Law Offices of Park & Associates
Suite 1722
3600 Wilshire Blvd.
Los Angeles CA 90010

JUN 24 2005

In re Application of:	:	
Choe *et al.*	:	
Serial No.: 10/896,146	:	DECISION ON REQUEST TO WITHDRAW FROM RECORD
Filed: July 21, 2004	:	
Attorney Docket No.: **1802.14**	:	

This is a decision on the request to withdraw as attorney/agent of record under 37 C.F.R. § 1.36, filed January 05, 2005.

A grantable request to withdraw as attorney of record must be signed by every attorney seeking to withdraw or contain a clear indication that one attorney is signing on behalf of others. A request to withdraw will not be approved unless at least thirty (30) days would remain between the date of approval and the later of the expiration date of a time to file a response or the expiration date of the maximum time period, which can be extended under 37 C.F.R. § 1.136(a).

The request meets all the above stated requirements. The request was signed by George W. Luchkhardt, on behalf of himself.

The request is **APPROVED**.

There are no attorneys of record at this time.

All future communications from the Office will be directed to the above address, until otherwise notified by applicant.

Inquiries related to this decision should be directed to Clayton E. LaBalle at (571) 272-1594.

Clayton E. LaBalle, Special Programs Examiner
Technology Center 2800
Semiconductors, Electrical and Optical
Systems and Components

UNITED STATES PATENT AND TRADEMARK OFFICE

Commissioner for Patents
United States Patent and Trademark Office
P.O. Box 1450
Alexandria, VA 22313-1450
www.uspto.gov

Paper No.

BLAKELY SOKOLOFF TAYLOR & ZAFMAN
12400 WILSHIRE BOULEVARD
SEVENTH FLOOR
LOS ANGELES CA 90025-1030

COPY MAILED
DEC 14 2006
OFFICE OF PETITIONS

In re Application of	:	
Khare et al.	:	DECISION ON PETITION
Application No. 10/896,151	:	
Filed: July 20, 2004	:	
Attorney Docket No. 42P9872C	:	

This is a decision on the PETITION TO REVIVE UNDER 37 CFR §1.137(a), filed August 4, 2006, in the above-identified application.

The above-identified application became abandoned for failure to pay the Issue Fee and Publication Fee within three months of the mailing date, January 24, 2005, of the Notice of Allowance and Fee(s) Due. This Office action set a three-month nonextendable statutory period for reply. No reply having been received, the above-identified application became abandoned on April 25, 2006. A courtesy Notice of Abandonment was mailed on June 8, 2006.

The facts and circumstances of the abandonment of this application as set forth on petition have been considered. Further, a review of the application history has been carefully undertaken. Under the facts and circumstances of the delay at issue, it is concluded that the delay was unavoidable within the meaning of 1.137(a).

In the future, such a petition may not be granted. Petitioner is reminded that to avoid abandonment some response to a Notice of Allowance and Fee(s) Due must be made within the three month non-extendable time period. (For example, a response requesting

that the Office apply the previously paid fee to the new Notice of Allowance).

The petition includes the required reply and payment of the petition fee.

The petition under § 1.137(a) is **GRANTED**.

The Office of Patent Publication has been advised of this decision. The application is, thereby, forwarded to the Publishing Division for processing into a patent (based on payment of the Issue Fee and Publication Fee in response to the Notice of Allowance and Fee(s) Due mailed October 6, 2005 and resubmission of the request on petition).

Telephone inquiries specific to this decision should be directed to the undersigned at (571) 272-3219.

Nancy Johnson
Senior Petitions Attorney
Office of Petitions

UNITED STATES PATENT AND TRADEMARK OFFICE

COMMISSIONER FOR PATENTS
UNITED STATES PATENT AND TRADEMARK OFFICE
P.O. BOX 1450
ALEXANDRIA, VA 22313-1450
www.uspto.gov

Paper No.

PEDERSEN & COMPANY, PLLC
P.O. BOX 2666
BOISE ID 83701

COPY MAILED

APR 25 2007

OFFICE OF PETITIONS

In re Application of	:	
Harold Crowson	:	DECISION ON PETITION
Application No. 10/896,160	:	
Filed: July 20, 2004	:	
Attorney Docket No. 3795	:	

This is in response to the PETITION TO WITHDRAW HOLDING OF ABANDONMENT ISSUED JANUARY 9, 2007 filed January 17, 2007.

The above-identified application became abandoned for failure to file a timely and proper reply to the non-final Office action mailed June 22, 2006. This Office action set a shortened statutory period for reply of three (3) months, with extensions of time obtainable under § 1.136(a). No reply considered filed and no extension of time considered obtained, the application became abandoned effective September 23, 2006. A courtesy Notice of Abandonment was mailed on January 9, 2007.

Petitioner asserts that a timely and proper Response was filed on December 22, 2006 and was received by the Office on December 27, 2006. In support thereof, petitioner submits a copy of the response and of their return postcard.

Consideration of petitioner's evidence is unnecessary. Their response, including an extension of time, is present in the application with a date of receipt of December 27, 2006. The response includes payment of a three-month extension of time and is made timely by virtue of the certificate of mailing dated December 22, 2006. The three-month extension of time, required to make the response timely, was previously made of record.

Accordingly, the Notice of Abandonment mailed January 9, 2007 is hereby **VACATED**, and the holding of abandonment is hereby **WITHDRAWN**.

The petition under § 1.181 is **GRANTED**.

No fee is required on petition under § 1.181.

Technology Center AU 3641 has been advised of this decision. The application file is, thereby, forwarded to the Technology Center's technical support staff to withdraw the holding of abandonment and for consideration by the examiner of the response timely filed on December 27, 2006 (with a certificate of mailing dated December 22, 2006).

Telephone inquiries specific to this matter should be directed to the undersigned at (571) 272-3219.

Nancy Johnson

Nancy Johnson
Senior Petitions Attorney
Office of Petitions

UNITED STATES PATENT AND TRADEMARK OFFICE

UNITED STATES DEPARTMENT OF COMMERCE
United States Patent and Trademark Office
Address: COMMISSIONER FOR PATENTS
P.O. Box 1450
Alexandria, Virginia 22313-1450
www.uspto.gov

APPL NO.	FILING OR 371 (c) DATE	ART UNIT	FIL FEE REC'D	ATTY.DOCKET NO	DRAWINGS	TOT CLMS	IND CLMS
10/896,162	07/20/2004	2857	824	T00116	6	23	3

CONFIRMATION NO. 8293

CORRECTED FILING RECEIPT

OC000000014243816

33438
HAMILTON & TERRILE, LLP
P.O. BOX 203518
AUSTIN, TX 78720

Date Mailed: 11/02/2004

Receipt is acknowledged of this regular Patent Application. It will be considered in its order and you will be notified as to the results of the examination. Be sure to provide the U.S. APPLICATION NUMBER, FILING DATE, NAME OF APPLICANT, and TITLE OF INVENTION when inquiring about this application. Fees transmitted by check or draft are subject to collection. Please verify the accuracy of the data presented on this receipt. **If an error is noted on this Filing Receipt, please write to the Office of Initial Patent Examination's Filing Receipt Corrections, facsimile number 703-746-9195. Please provide a copy of this Filing Receipt with the changes noted thereon. If you received a "Notice to File Missing Parts" for this application, please submit any corrections to this Filing Receipt with your reply to the Notice. When the USPTO processes the reply to the Notice, the USPTO will generate another Filing Receipt incorporating the requested corrections (if appropriate).**

Applicant(s)

Stephen W. Young, Austin, TX;
Daniel P. Karipides, Round Rock, TX;

Power of Attorney:

Gary Hamilton–31834
Stephen A. Terrile–32946
Michael Rocco Cannatti–34791
Kent Chambers–38839
Robert Holland–40020

Domestic Priority data as claimed by applicant

Foreign Applications

If Required, Foreign Filing License Granted: 09/23/2004

The country code and number of your priority application, to be used for filing abroad under the Paris Convention, is US10/896,162

Projected Publication Date: Request for Non-Publication Acknowledged

Non-Publication Request: Yes

Early Publication Request: No

Title

Determining confidence intervals for weighted trial data

Preliminary Class

702

LICENSE FOR FOREIGN FILING UNDER
Title 35, United States Code, Section 184
Title 37, Code of Federal Regulations, 5.11 & 5.15

GRANTED

The applicant has been granted a license under 35 U.S.C. 184, if the phrase "IF REQUIRED, FOREIGN FILING LICENSE GRANTED" followed by a date appears on this form. Such licenses are issued in all applications where the conditions for issuance of a license have been met, regardless of whether or not a license may be required as set forth in 37 CFR 5.15. The scope and limitations of this license are set forth in 37 CFR 5.15(a) unless an earlier license has been issued under 37 CFR 5.15(b). The license is subject to revocation upon written notification. The date indicated is the effective date of the license, unless an earlier license of similar scope has been granted under 37 CFR 5.13 or 5.14.

This license is to be retained by the licensee and may be used at any time on or after the effective date thereof unless it is revoked. This license is automatically transferred to any related applications(s) filed under 37 CFR 1.53(d). This license is not retroactive.

The grant of a license does not in any way lessen the responsibility of a licensee for the security of the subject matter as imposed by any Government contract or the provisions of existing laws relating to espionage and the national security or the export of technical data. Licensees should apprise themselves of current regulations especially with respect to certain countries, of other agencies, particularly the Office of Defense Trade Controls, Department of State (with respect to Arms, Munitions and Implements of War (22 CFR 121-128)); the Office of Export Administration, Department of Commerce (15 CFR 370.10 (j)); the Office of Foreign Assets Control, Department of Treasury (31 CFR Parts 500+) and the Department of Energy.

NOT GRANTED

No license under 35 U.S.C. 184 has been granted at this time, if the phrase "IF REQUIRED, FOREIGN FILING LICENSE GRANTED" DOES NOT appear on this form. Applicant may still petition for a license under 37 CFR 5.12, if a license is desired before the expiration of 6 months from the filing date of the application. If 6 months has lapsed from the filing date of this application and the licensee has not received any indication of a secrecy order under 35 U.S.C. 181, the licensee may foreign file the application pursuant to 37 CFR 5.15(b).

UNITED STATES PATENT AND TRADEMARK OFFICE

Commissioner for Patents
United States Patent and Trademark Office
P.O. Box 1450
Alexandria, VA 22313-1450
www.uspto.gov

Douglas B. Thompson, Esq.
Thompson Lambert LLP
Suite 200
10328 - 81 Avenue
Edmonton AB T6E 1X2 CA
CANADA

COPY MAILED

MAR 1 3 2007

OFFICE OF PETITIONS

In re Patent of Szymocha	:	
Patent No. 7,077,124	:	
Issue Date: July 18, 2006	:	Decision on Petition
Application No. 10/896,178	:	
Filing Date: July 21, 2004	:	
Attorney Docket No. LAMA123341	:	

This is a notice regarding your request for acceptance of a fee deficiency submission under 37 CFR 1.28(c), filed November 3, 2006.

The deficiency payment of $2,280 is hereby accepted.

The change of status to large entity has been entered and made of record.

The file does not indicate a change of address has been submitted, although the address given on the petition differs from the address of record. If appropriate, a request to change the address of record should be filed. A courtesy copy of this decision is being mailed to the address given on the petition; however, the Office will mail all future correspondence solely to the address of record.

The file is being forwarded to Files Repository.

Telephone inquiries regarding this communication should be directed to Petitions Attorney Steven Brantley at (571) 272-3203.

Charles Steven Brantley
Senior Petitions Attorney
Office of Petitions

cc: Christensen O'Conner Johnson Kindness PLLC
Suite 2800
1420 Fifth Avenue
Seattle, WA 98101

UNITED STATES PATENT AND TRADEMARK OFFICE

Commissioner for Patents
United States Patent and Trademark Office
P.O. Box 1450
Alexandria, VA 22313-1450
www.uspto.gov

IBM Corporation, T.J. Watson Research Center
P.O. Box 218
Yorktown Heights, NY 10598

COPY MAILED

MAR 17 2008

OFFICE OF PETITIONS

In re Application of	:	
Masaki Aono, et. al.	:	
Application No. 10/896,191	:	ON PETITION
Filed: July 21, 2004	:	
Attorney Docket No. JP920030144US1	:	

This is a decision on the petition under 37 CFR 1.137(b), filed on October 23, 2007, to revive the above-identified application.

The above application became abandoned for failure a proper reply to the non-final Office action mailed January 22, 2007. A Notice of Abandonment was mailed on August 20, 2007.

There is no indication that the person signing the instant petition was ever given a power of attorney or authorization of agent to prosecute the above-identified application. In accordance with 37 CFR 1.34(a), the signature appearing on the petition shall constitute a representation to the United States Patent and Trademark Office that he/she is authorized to represent the particular party in whose behalf he/she acts.

The petition satisfies the requirements of 37 CFR 1.137(b), in that, petitioner has supplied (1) the reply in the form of an amendment; (2) the petition fee of $1,540; and (3) a proper statement of unintentional delay. Therefore, the petition is **GRANTED**.

The application file is being referred to Technology Center Art Unit 2162, for further review of the amendment filed with the instant petition.

Telephone inquiries concerning this decision should be directed to the undersigned at (571) 272-3226.

Andrea Smith
Petitions Examiner
Office of Petitions

UNITED STATES PATENT AND TRADEMARK OFFICE

UNITED STATES DEPARTMENT OF COMMERCE
United States Patent and Trademark Office
Address: COMMISSIONER FOR PATENTS
P.O. Box 1450
Alexandria, Virginia 22313-1450
www.uspto.gov

APPLICATION NO.	FILING DATE	FIRST NAMED INVENTOR	ATTORNEY DOCKET NO.	CONFIRMATION NO.
10/896,195	07/22/2004	Yuhichi Saitoh	1248-0738PUS1	7972

2292 7590 03/03/2008
BIRCH STEWART KOLASCH & BIRCH
PO BOX 747
FALLS CHURCH, VA 22040-0747

EXAMINER
IP, SIKYIN

ART UNIT	PAPER NUMBER
1793	

NOTIFICATION DATE	DELIVERY MODE
03/03/2008	ELECTRONIC

Please find below and/or attached an Office communication concerning this application or proceeding.

The time period for reply, if any, is set in the attached communication.

Notice of the Office communication was sent electronically on above-indicated "Notification Date" to the following e-mail address(es):

mailroom@bskb.com

UNITED STATES PATENT AND TRADEMARK OFFICE

Commissioner for Patents
United States Patent and Trademark Office
P.O. Box 1450
Alexandria, VA 22313-1450
www.uspto.gov

caf

3-3-08

In re application of Yuhichi SAITOH et al. Serial No. 10/896,195 Filed: July 22, 2004 For: SILVER ALLOY MATERIAL, CIRCUIT SUBSTRATE, ELECTRONIC DEVICE, AND METHOD FOR MANUFACTURING CIRCUIT SUBSTRATE	:	DECISION ON PETITION

This is a decision on the PETITION TO MODIFY RESTRICTION REQUIREMENT filed December 26, 2007.

On May 29, 2007, a restriction requirement was made by the examiner. The examiner required restriction between Group I (composition and/or products) and Group II (method of manufacture). Group I was then further divided into silver alloys, a circuit substrate, electronic device, display device and sputtering target, evaporation or fluid metal. Applicants traversed the restriction requirement in a response filed June 27, 2007. The examiner maintained the requirement in an office action mailed September 25, 2007.

On December 26, 2007, the instant petition under 37 CFR 1.144 was filed to formally request the modification of the restriction requirement.

Applicant's position for the modification of the restriction requirement is that method claim 14 uses the alloy of examined claims 1-6. Further, the method of claim 14 produces the product of claim 7. Claims 7-13 also require the alloy of claims 1-6 (a silver-indium alloy). Further, applicants argue the Examiner's indication of finality of the original restriction requirement is deficient in that it only addresses distinctions between claims 8 and 9, not with respect tot claims 1-6 and claims7-14 as asserted by applicants.

DECISION

Sections 803 and 806.05(f) of the MPEP state in part:

803 [R-3] Restriction — When Proper
Under the statute, the claims of an application may properly be required to be restricted to one of two or more claimed inventions only if they are able to support separate patents and they are either independent or distinct.

If the search and examination of all the claims in an application can be made without serious burden, the examiner must examine them on the merits, even though they include claims to independent or distinct inventions.

806.05(f) [R-3] Process of Making and Product Made
A process of making and a product made by the process can be shown to be distinct inventions if either or both of the following can be shown: (A) that the process as claimed is not an obvious process of making the product and the process as claimed can be used to make another materially different product; or (B) that the product as claimed can be made by another materially different process. Allegations of different processes or products need not be documented.
If applicant convincingly traverses the requirement, the burden shifts to the examiner to document a viable alternative process or product, or withdraw the requirement.

In the restriction requirement mailed on May 29, 2007, the examiner required restriction between a composition and/or products and a method for manufacture of a circuit substrate. The examiner took the position that the inventions are distinct because the products such as circuit substrate, sputtering target, liquid crystal display, evaporation source, or etc. as claimed "obviously are made by another and materially different processes".

In the responses filed June 27, 2007, applicants argued that claims should be grouped in Group A (claims 1-14); Group B (claims 15-23) and Group C (claims 24-38) because e.g. all independent claims of group A include the following feature defined in claim 1:

A silver alloy material for composing lines and/or electrodes formed on an insulation substrate, comprising:

silver as a main component; and

at least one element selected from the group consisting of tin, zinc, lead, bismuth, indium and gallium.

In response to the traversal of the restriction requirement, the examiner stated "Applicants' Groups A-C of claims are noted. But there is no explanation, for example, why circuit substrate in claim 7 would be structured same as electronic device in claim 8".

It is submitted that the examiner's initial restriction requirement was not appropriate. The examiner held that the groups were related as process of making and product made. This, however, was not an appropriate grouping for all of the claims. Claims 11-13, for example, are not directed to a product made by the process of claim 14. Instead, they relate to a product used in the process. Thus, the examiner has not met the burden of showing why the claims of the groups set forth are distinct.

Since applicant has submitted alternate groupings of claims in the response to the restriction requirement, these groupings have been adopted. Claims 7-14 will be regrouped with examined claims 1-6.

Accordingly, the petition for modification of the restriction requirement is **GRANTED.** The application will be forwarded to the examiner for consideration of claims 7-14.

Jacqueline M. Stone, Director
Technology Center 1700
Chemical and Materials Engineering

BIRCH STEWART KOLASCH & BIRCH
PO BOX 747
FALLS CHURCH VA 22040-0747

UNITED STATES PATENT AND TRADEMARK OFFICE

COMMISSIONER FOR PATENTS
UNITED STATES PATENT AND TRADEMARK OFFICE
P.O. BOX 1450
ALEXANDRIA, VA 22313-1450
www.uspto.gov

MINTZ LEVIN COHN FERRIS GLOVSKY AND POPEO PC
12010 SUNSET HILLS ROAD
SUITE 900
RESTON, VA 20190

COPY MAILED
AUG 24 2005
OFFICE OF PETITIONS

In re Application of	:	
Konrad Bergandy, et al.	:	
Application No. 10/896,230	:	DECISION ON PETITION
Filed: July 22, 2004	:	UNDER 37 CFR 1.78(a)(3)
Attorney Docket No. 24116-504		

This is a decision on the petition under 37 CFR 1.78(a)(3), filed January 4, 2005, to accept an unintentionally delayed claim under 35 U.S.C. § 120 for the benefit of priority to the prior-filed nonprovisional applications set forth in the amendment filed concurrently with the instant petition.

The petition is **GRANTED**.

A petition for acceptance of a claim for late priority under 37 CFR 1.78(a)(3) is only applicable to those applications filed on or after November 29, 2000. Further, the petition is appropriate only after the expiration of the period specified in 37 CFR 1.78(a)(2)(ii). In addition, the petition under 37 CFR 1.78(a)(3) must be accompanied by:

(1) the reference required by 35 U.S.C. § 120 and 37 CFR 1.78(a)(2)(i) of the prior-filed application, unless previously submitted;
(2) the surcharge set forth in § 1.17(t); and
(3) a statement that the entire delay between the date the claim was due under 37 CFR 1.78(a)(2)(ii) and the date the claim was filed was unintentional. The Commissioner may require additional information where there is a question whether the delay was unintentional.

The petition satisfies all of the above requirements.

The granting of the petition to accept the delayed benefit claim to the prior-filed applications under 37 CFR 1.78(a)(3) should not be construed as meaning that the instant application is entitled to the benefit of the prior-filed applications. In order for the instant application to be

entitled to the benefit of the prior-filed applications, all other requirements under 35 U.S.C. § 120 and 37 CFR 1.78(a)(1) and (a)(2) must be met. Similarly, the fact that the corrected Filing Receipt accompanying this decision on petition includes the prior-filed applications should not be construed as meaning that applicant is entitled to the claim for benefit of priority to the prior-filed applications noted thereon. Accordingly, the examiner will, in due course, consider this benefit claim and determine whether the instant application is entitled to the benefit of the earlier filing date.

A corrected Filing Receipt, which includes the priority claim to the prior-filed nonprovisional applications, accompanies this decision on petition.

Any questions concerning this matter may be directed to Sherry D. Brinkley at (571) 272-3204.

This application is being referred to Technology Center Art Unit 1733 for appropriate action on the amendment filed January 4, 2005, including consideration by the examiner of applicant's entitlement to claim benefit of priority under 35 U.S.C. § 120 to the prior-filed nonprovisional applications.

Sherry D. Brinkley
Petitions Examiner
Office of Petitions
Office of the Deputy Commissioner
for Patent Examination Policy

Frances M. Hicks
Lead Petitions Examiner
Office of Petitions
Office of the Deputy Commissioner
for Patent Examination Policy

Attachment: Corrected Filing Receipt

UNITED STATES PATENT AND TRADEMARK OFFICE

Commissioner for Patents
United States Patent and Trademark Office
P.O. Box 1450
Alexandria, VA 22313-1450
www.uspto.gov

Paper No. 051305

JUN 2 8 2005

AKERMAN SENTERFITT
P.O. BOX 3188
WEST PALM BEACH FL 33402-3188

In re Application of:
ALAN M. JACOBS
Serial No.: 10/896,243
Filed: July 20, 2004
For: **RADIOGRAPHY BY SELECTIVE DETECTION OF SCATTER FIELD VELOCITY COMPONENTS**

DECISION ON PETITION TO MAKE SPECIAL

This is a decision on the petition under 37 C.F.R. § 1.102(c), filed April 26, 2005 to make the above-identified application special.

Petitioner requests that the above-identified application be made special under the accelerated examination procedure set forth in the Manual of Patent Examining Procedure (M.P.E.P.) § 708.02, Section IV: Applicant's Age.

A grantable petition to make special under 37 C.F.R. § 1.102, and in accordance with M.P.E.P. § 708.02, Section IV, must include evidence showing that the applicant is sixty five (65) years of age or more. No fee is required for this petition.

The petition includes a copy of a driver's license showing that Alan M. Jacobs is sixty-five (65) years of age or more.

Accordingly, the petition is GRANTED.

If the examiner can make this application special without prejudice to any possible interfering applications, and s/he should make a rigid search for such, s/he is authorized to do so for the next action. Should the application be rejected, the application will not be considered special for the subsequent action unless the applicant promptly makes a bona fide effort to place the application in condition for allowance, even if it is necessary to have an interview with the examiner to accomplish this purpose.

If the examiner finds any interfering application for the same subject matter, s/he should consider such application simultaneously with this application and should state in the official letter of such application that s/he is taking it out of its turn because of possible interference.

Should an appeal be taken in this application or should this application become involved in an interference, consideration of the appeal and the interference will be expedited by all Patent and Trademark Office officials concerned, contingent likewise upon diligent prosecution by the applicant.

After allowance, this application will be given priority for printing. See M.P.E.P. § 1309.

Inquiries regarding this decision should be directed to Clayton LaBalle at (571) 272-1594.

Clayton LaBalle, Special Programs Examiner
Technology Center 2800
Semiconductors, Electrical and Optical
Systems and Components

UNITED STATES PATENT AND TRADEMARK OFFICE

COMMISSIONER FOR PATENTS
UNITED STATES PATENT AND TRADEMARK OFFICE
P.O. BOX 1450
ALEXANDRIA, VA 22313-1450
www.uspto.gov

COPY MAILED

MAR 17 2009

OFFICE OF PETITIONS

Intellectual Property Department
Amylin Pharmaceuticals, Inc.
9360 Towne Centre Drive
San Diego CA 92121

In re Application	:	
Young, et al.	:	
Application No. 10/896,244	:	PATENT TERM ADJUSTMENT
Filed: July 20, 2004	:	
Dkt. No.: 0223-CON-0	:	

This is a decision on the "Application for Patent Term Adjustment under 37 CFR § 1.705(b)," filed December 16, 2008.

The application for patent term adjustment (PTA) under 37 CFR 1.705(b) is **GRANTED IN PART and HELD IN ABEYANCE IN PART**.

The Determination of Patent Term Adjustment under 35 U.S.C. 154(b), mailed October 16, 2008, indicated a patent term adjustment (PTA) to date of 445 days. The instant application for PTA was timely filed December 16, 2008, at the time of submission of the issue fee payment. Applicants argue that the adjustment of 484 days accorded in connection with the mailing of the first non-final Office is incorrect and that the correct adjustment in this regard is 652 days. Applicants further argue that application is entitled to an additional adjustment of 353 days in accordance with 37 CFR 1.703(a)(1).

The correct PTA at the time of the allowance is 529 days, as discussed herein.

The non-final Office action mailed January 17, 2007 was vacated and a new non-final Office action mailed on July 5, 2007. Thus, in accordance with 37 CFR 1.702(a)(1), the application is entitled to an adjustment of 653 days. The adjustment commenced September 21, 2005, the day after the date that is 14 months after the date that the application was filed, and ended July 5, 2007, the date that the non-final Office action was mailed. See, 37 CFR 1.703(a)(1).

Applicants do not contest the reduction of 39 days accorded under 37 CFR 1.704(c)(3) in connection with the IDS filed March 3, 2008.

Applicants advise that an IDS was filed September 30, 2008. Thus, the Office neglected to assess a reduction of 85 days in connection with the IDS filed September 30, 2008. In accordance with 37 CFR 1.704(c)(8), the reduction commenced July 7, 2008, the day after the date that the initial reply to the final Office action was filed, and ended September 30, 2008, the date that the IDS was filed.

Applicants further argue that the application is entitled to an additional adjustment of 353 days. Applicants contest the adjustment insofar as it relates to the Office's failure to issue the patent within three years of the filing date of the application pursuant to 37 CFR 1.703(b) in view of Wyeth v. Dudas, No. 07-1492 (D.D.C. September 30, 2008).

To the extent that this application for patent term adjustment requests reconsideration of the patent term adjustment as it relates to the Office's failure to issue the patent within 3 years of the filing date, a decision is being **held in abeyance** until after the actual patent date. Knowledge of the actual date the patent issues is ordinarily required to calculate the amount, if any, of additional patent term patentee is entitled to for Office failure to issue the patent within 3 years. See, 37 CFR 1.703(b). It is noted that at the time of this decision, the patent has not issued.

Applicants are given **TWO (2) MONTHS** from the issue date of the patent to file a written request for reconsideration of the patent term adjustment for Office failure to issue the patent within 3 years. A copy of this decision should accompany the request. Applicants may seek such consideration without payment of an additional fee. However, as to all other bases for seeking reconsideration of the patent term adjustment indicated in the patent, all requirements of § 1.705(d) must be met. Requests for reconsideration on other bases must be timely filed and must include payment of the required fee.

With respect to the over 3 year calculation, rather than file the request for reconsideration of Patent Term Adjustment at the time of the mailing of the notice of allowance, applicants are advised that they may wait until the time of the issuance of the patent and file a request for reconsideration of the patent term pursuant to 37 CFR 1.705(d). The USPTO notes that it does not calculate the amount of time earned pursuant to 37 CFR 1.702(b) until the time of the issuance of the patent and accordingly, the Office will consider any request for reconsideration of the

patent term adjustment due to an error in the calculation of 37 CFR 1.702(b) to be timely if the request for reconsideration is filed within two months of the issuance of the patent.

In view thereof, at the time of allowance, the application is entitled to an overall adjustment of 529 days (adjustment totalling 653 days less reductions totalling 124 days).

The required application fee of $200.00 has been charged to applicants' deposit account as authorized.

The application file is being forwarded to the Office of Data Management for issuance of the patent. The patent term adjustment indicated on the patent (as shown on the Issue Notification mailed about three weeks prior to patent issuance) will include any additional adjustment accrued both for Office delay in issuing the patent more than four months after payment of the issue fee and satisfaction of all outstanding requirements, and for the Office taking in excess of three years to issue the patent (to the extent that the three-year period does not overlap with periods already accorded).

Telephone inquiries specific to this matter should be directed to Petitions Attorney Alesia M. Brown at (571) 272-3205.

Kery Fries

Kery Fries
Senior Legal Advisor
Office of Patent Legal Administration
Office of Deputy Commissioner
for Patent Examination Policy

Day : Monday
Date: 3/16/2009

PALM INTRANET

Time: 13:51:54

PTA Calculations for Application: 10/896244			
Application Filing Date:	07/20/2004	PTO Delay (PTO):	484
Issue Date of Patent:		Three Years:	0
Pre-Issue Petitions:	0	Applicant Delay (APPL):	39
Post-Issue Petitions:	0	Total PTA (days):	529
PTO Delay Adjustment:	84		

File Contents History

Number	Date	Contents Description	PTO	APPL	START
91	03/16/2009	ADJUSTMENT OF PTA CALCULATION BY PTO	84		
82	10/16/2008	MAIL NOTICE OF ALLOWANCE			
81	10/14/2008	ISSUE REVISION COMPLETED			
80	10/14/2008	DOCUMENT VERIFICATION			
79	10/14/2008	NOTICE OF ALLOWANCE DATA VERIFICATION COMPLETED			
78	10/14/2008	EXAMINER'S AMENDMENT COMMUNICATION			
77	10/14/2008	NOTICE OF ALLOWABILITY			
76	09/30/2008	INFORMATION DISCLOSURE STATEMENT CONSIDERED			
75	07/07/2008	INFORMATION DISCLOSURE STATEMENT CONSIDERED			
71	09/30/2008	INFORMATION DISCLOSURE STATEMENT (IDS) FILED			
69	07/07/2008	REFERENCE CAPTURE ON IDS			
68	07/07/2008	INFORMATION DISCLOSURE STATEMENT (IDS) FILED		0	64
67	07/31/2008	DATE FORWARDED TO EXAMINER			
66	07/07/2008	AMENDMENT SUBMITTED/ENTERED WITH FILING OF CPA/RCE			
65	07/31/2008	DATE FORWARDED TO EXAMINER			
64	07/07/2008	REQUEST FOR CONTINUED EXAMINATION (RCE)			
63	07/31/2008	DISPOSAL FOR A RCE/CPA/129 (EXPRESS ABANDONMENT IF CPA)			
62	07/07/2008	INFORMATION DISCLOSURE STATEMENT (IDS) FILED			
57	07/07/2008	WORKFLOW - REQUEST FOR RCE - BEGIN			

56	03/03/2008	REFERENCE CAPTURE ON IDS			
55	03/03/2008	INFORMATION DISCLOSURE STATEMENT (IDS) FILED		39	39
54	06/18/2008	MAIL ADVISORY ACTION (PTOL - 303)			
53	06/17/2008	ADVISORY ACTION (PTOL-303)			
52	06/14/2008	DATE FORWARDED TO EXAMINER			
51	06/10/2008	AMENDMENT AFTER FINAL REJECTION			
50	04/18/2008	MAIL FINAL REJECTION (PTOL - 326)			
49	04/14/2008	FINAL REJECTION			
48	03/03/2008	INFORMATION DISCLOSURE STATEMENT CONSIDERED			
47	01/24/2008	INFORMATION DISCLOSURE STATEMENT CONSIDERED			
45	04/10/2008	PARALEGAL TD ACCEPTED			
44	03/03/2008	INFORMATION DISCLOSURE STATEMENT (IDS) FILED			
42	01/24/2008	INFORMATION DISCLOSURE STATEMENT (IDS) FILED			
41	01/24/2008	AFFIDAVIT(S) (RULE 131 OR 132) OR EXHIBIT(S) RECEIVED			
40	02/01/2008	DATE FORWARDED TO EXAMINER			
39	01/24/2008	RESPONSE AFTER NON-FINAL ACTION			
33	01/24/2008	INFORMATION DISCLOSURE STATEMENT (IDS) FILED			
32	12/31/2007	MAIL NON-FINAL REJECTION			
31	12/26/2007	NON-FINAL REJECTION			
29	10/10/2007	DATE FORWARDED TO EXAMINER			
28	10/04/2007	RESPONSE AFTER NON-FINAL ACTION			
27	07/05/2007	MAIL NON-FINAL REJECTION			
26	06/25/2007	NON-FINAL REJECTION			
25	04/13/2007	DATE FORWARDED TO EXAMINER			
24	04/10/2007	RESPONSE AFTER NON-FINAL ACTION			
23	01/11/2007	MISCELLANEOUS INCOMING LETTER			
22	01/17/2007	MAIL NON-FINAL REJECTION	484		-1
21	01/08/2007	NON-FINAL REJECTION			
20	07/20/2004	INFORMATION DISCLOSURE STATEMENT CONSIDERED			
19	01/19/2006	MISCELLANEOUS INCOMING LETTER			
18	07/21/2005	MISCELLANEOUS INCOMING LETTER			

17	06/28/2005	CASE DOCKETED TO EXAMINER IN GAU			
16	09/27/2004	IFW TSS PROCESSING BY TECH CENTER COMPLETE			
15	07/20/2004	REFERENCE CAPTURE ON IDS			
14.7	07/20/2004	INFORMATION DISCLOSURE STATEMENT (IDS) FILED			
14	07/20/2004	INFORMATION DISCLOSURE STATEMENT (IDS) FILED			
13	07/20/2004	PRELIMINARY AMENDMENT			
12	09/27/2004	CASE DOCKETED TO EXAMINER IN GAU			
11	09/23/2004	APPLICATION RETURN FROM OIPE			
10	09/23/2004	APPLICATION RETURN TO OIPE			
9	09/23/2004	APPLICATION DISPATCHED FROM OIPE			
8	09/23/2004	APPLICATION IS NOW COMPLETE			
7	09/15/2004	CLEARED BY L&R (LARS)			
6	09/08/2004	REFERRED TO LEVEL 2 (LARS) BY OIPE CSR			
5	09/08/2004	CASE CLASSIFIED BY OIPE			
4	08/26/2004	IFW SCAN & PACR AUTO SECURITY REVIEW			
3	08/02/2004	CRF IS GOOD TECHNICALLY / ENTERED INTO DATABASE			
2	07/20/2004	CRF DISK HAS BEEN RECEIVED BY PREEXAM / GROUP / PCT			
1	07/20/2004	INITIAL EXAM TEAM NN			

Search Another: Application# Search

EXPLANATION OF PTA CALCULATION

EXPLANATION OF PTE CALCULATION

To go back, right click here and select Back. To go forward, right click here and select Forward. To refresh, right click here and select Refresh.

Back to OASIS | Home page

UNITED STATES PATENT AND TRADEMARK OFFICE

COMMISSIONER FOR PATENTS
UNITED STATES PATENT AND TRADEMARK OFFICE
P.O. BOX 1450
ALEXANDRIA, VA 22313-1450
www.uspto.gov

Intellectual Property Department
Amylin Pharmaceuticals, Inc.
9360 Towne Centre Drive
San Diego CA 92121

MAILED

OCT 21 2009

OFFICE OF PETITIONS

In re Patent No. 7,521,423 :
Issued: April 21, 2009 :
Application No. 10/896,244 : PATENT TERM ADJUSTMENT
Filed: July 20, 2004 :
Dkt. No.: 0223-CON-0 :

This is a decision on the "Second Application for Patent Term Adjustment under 37 CFR § 1.705(b)," filed April 21, 2009. This matter is being properly treated as an application for patent term adjustment under 37 CFR 1.705(d).

The application for patent term adjustment (PTA) under 37 CFR 1.705(d) is **DISMISSED**.

The above-identified application matured into U.S. Pat. No. 7,521,423 on April 21, 2009. The patent issued with a patent term adjustment of 534 days. Patentees argue that the reduction of 85 days pursuant to 37 CFR 1.704(c)(8) in connection with the information disclosure statement (IDS) filed September 30, 2008 is in error. Patentees further argue that in view of Wyeth v. Dudas, No. 07-1492 (D.D.C. 2008), the patent is entitled to an additional adjustment of 353 days in pursuant to 37 CFR 1.703(b).

A Request for Continued Examination (RCE) was filed July 7, 2008. Thereafter, on September 30, 2008, an IDS was filed. Patentees argue that the filing of the IDS did not have any impact on PTA and further state that the PTO timely replied to the RCE by issuing a Notice of Allowance on October 15, 2008. Patentees further argue that because "the time between July 7, 2008, and September 30, 2008, was a time period which was attributable to the PTO for providing a response, a reduction of 85 days to Patentee's PTA is not appropriate."

Patentees' arguments have been carefully considered, but are not convincing. Patentees' argument that the reduction of 85 days is not appropriate because the PTO timely mailed a response to the RCE within four months is not supported by any legal authority.

In accordance with 37 CFR 1.704(c)(8), submission of a supplemental reply or other paper, other than a supplemental reply or other paper expressly requested by the examiner, after a reply has been filed constitutes a failure to engage in reasonable efforts to conclude processing or examination of an application.

There is no indication in the record that the IDS was submitted at the express request of the examiner. Accordingly, the patent term adjustment is reduced 85 days, the reduction having

commenced July 8, 2008, the day after the date that the initial reply was filed, and ended September 30, 2008, the date that the IDS was filed.

The application was filed July 20, 2004. A request for continued examination was filed June 7, 2008. The Office determined that the 653 days of Office delay pursuant to 35 U.S.C. 154(b)(1)(A) and 37 CFR 1.702(a)(1)[1] accorded prior to the filing of the request for continued examination overlaps with the 353 days of Office delay pursuant to 35 U.S.C. 154(b)(1)(B) and 37 CFR 1.702(b)[2,3]. As such, the Office allowed only entry of the actual period of delay, to wit, 653 days. No additional days of patent term adjustment were entered at issuance under the three-year pendency provision. Given the applicant delay of 124 days and the overall adjustment of 658 days, the application matured into U.S. Patent No. 7,521,423 with a revised patent term adjustment of 534 days (658 days less 124 days).

On April 21, 2009, patentees timely submitted this request for reconsideration of patent term adjustment, asserting an entitlement to an additional 353 days of patent term adjustment pursuant to 37 CFR 1.702(b) under the courts interpretation of the overlap provision as set forth in Wyeth v. Dudas, 580 F. Supp. 2d 138, 88 U.S.P.Q. 2d 1538 (D.D.C. 2008).

Patentees' arguments have been carefully considered, but found inconsistent with the Office's interpretation of the overlap provision, 35 U.S.C. 154(b)(2)(A).

35 U.S.C. 154(b)(2)(A) limits the adjustment of patent term, as follows:

> To the extent that the periods of delay attributable to grounds specified in paragraph (1) overlap, the period of any adjustment granted under this subsection shall not exceed the actual number of days the issuance of the

---

[1] 37 CFR § 1.702, provides grounds for adjustment of patent term due to examination delay under the Patent Term Guarantee Act of 1999 (original applications, other than designs, filed on or after May 29, 2000).

> (a) Failure to take certain actions within specified time frames. Subject to the provisions of 35 U.S.C. 154(b) and this subpart, the term of an original patent shall be adjusted if the issuance of the patent was delayed due to the failure of the Office to:
> (1) Mail at least one of a notification under 35 U.S.C. 132 or a notice of allowance under 35 U.S.C. 151 not later than fourteen months after the date on which the application was filed under 35 U.S.C. 111(a) or fulfilled the requirements of 35 U.S.C. 371 in an international application;

[2] Pursuant to 35 U.S.C. 154(b)(1)(B), 37 CFR 1.702(b) provides, in pertinent part, that:

> Failure to issue a patent within three years of the actual filing date of the application. Subject to the provisions of 35 U.S.C. 154(b) and this subpart, the term of an original patent shall be adjusted if the issuance of the patent was delayed due to the failure of the Office to issue a patent within three years after the date on which the application was filed under 35 U.S.C. 111(a) or the national stage commenced under 35 U.S.C. 371(b) or (f) in an international application, but not including:
>
> (i) any time consumed by continued examination of the application requested by the applicant under section 132(b).

[3] As of the filing of the RCE on July 7, 2008, the application was pending three years and 353 days.

patent was delayed.

As explained in *Explanation of 37 CFR 1.703(f)*[4] *and of the United States Patent and Trademark Office Interpretation of 35 U.S.C. 154(b)(2)(A)*, 69 Fed. Reg. 34283 (June 21, 2004), the Office interprets 35 U.S.C. 154(b)(2)(A) as permitting either patent term adjustment under 35 U.S.C. 154(b)(1)(A)(i)-(iv), or patent term adjustment under 35 U.S.C. 154(b)(1)(B), but not as permitting patent term adjustment under both 35 U.S.C. 154(b)(1)(A)(i)-(iv) and 154(b)(1)(B). Accordingly, the Office implements the overlap provision as follows:

> If an application is entitled to an adjustment under 35 U.S.C. 154(b)(1)(B), the entire period during which the application was pending (except for periods excluded under 35 U.S.C. 154(b)(1)(B)(i)-(iii)), and not just the period beginning three years after the actual filing date of the application, is the period of delay under 35 U.S.C. 154(b)(1)(B) in determining whether periods of delay overlap under 35 U.S.C. 154(b)(2)(A). Thus, any days of delay for Office issuance of the patent more than 3 years after the filing date of the application, which overlap with the days of patent term adjustment accorded prior to the issuance of the patent will not result in any additional patent term adjustment. See 35 U.S.C. 154(b)(1)(B), 35 U.S.C. 154(b)(2)(A), and 37 CFR § 1.703(f). See *Changes to Implement Patent Term Adjustment Under Twenty Year Term; Final Rule*, 65 Fed. Reg. 54366 (Sept. 18, 2000). See also *Revision of Patent Term Extension and Patent Term Adjustment Provisions; Final Rule*, 69 Fed. Reg. 21704 (April 22, 2004), 1282 Off. Gaz. Pat. Office 100 (May 18, 2004).

Further, as stated in the *Explanation of 37 CFR 1.703(f) and of the United States Patent and Trademark Office Interpretation of 35 U.S.C. 154(b)(2)(A)*, the Office has consistently taken the position that if an application is entitled to an adjustment under the three-year pendency provision of 35 U.S.C. 154(b)(1)(B), the entire period during which the application was pending before the Office (except for periods excluded under 35 U.S.C. 154(b)(1)(B)(i)-(iii)), and not just the period beginning three years after the actual filing date of the application, is the relevant period under 35 U.S.C. 154(b)(1)(B) in determining whether periods of delay "overlap" under 35 U.S.C. 154(b)(2)(A).

This interpretation is consistent with the statute. Taken together the statute and rule provide that to the extent that periods of delay attributable to grounds specified in 35 U.S.C. 154(b)(1) and in corresponding §1.702 overlap, the period of adjustment granted shall not exceed the actual number of days the issuance of the patent was delayed.

In this instance, the relevant period under 35 U.S.C. 154(b)(1)(B) in determining whether periods of delay "overlap" under 35 U.S.C. 154(b)(1)(A) is the period during which the application was pending before the Office beginning on the application filing date under 35 U.S.C. 111(a), July

---

[4] Likewise, 37 CFR 1.703(f) provides that:

> To the extent that periods of delay attributable to the grounds specified in §1.702 overlap, the period of adjustment granted under this section shall not exceed the actual number of days the issuance of the patent was delayed.

20, 2004, and ending on the date of filing of a request for continued examination (RCE), July 7, 2008 (not including any other periods excluded under 35 U.S.C. 154(b)(1)(B)(i)-(iii)). The relevant period ends with the filing of the RCE as the three-year time frame specified in 35 U.S.C. 154(b)(1)(B) does not include the period subsequent to the filing of the RCE. 35 U.S.C. 154(b)(1)(B)(i).

Pursuant to 35 U.S.C. 154(b)(1)(A) and 37 CFR 1.702(a)(1), 653 days of patent term adjustment were accorded during the pendency of the application for Office delay prior to the filing of the request for continued examination. Pursuant to 35 U.S.C. 154(b)(1)(B) and 37 CFR 1.702(b), 353 days of patent term adjustment accrued for Office issuance of the patent more than three years after the filing date of the application.

The 353 days of patent term adjustment under 37 CFR 1.702(b) overlaps with the 653 days of patent term adjustment under 37 CFR 1.702(a)(1). Entry of both the 653 days and the 353 days is neither permitted nor warranted given that 653 days is the actual number of days issuance of the patent was delayed (at the time of submission of the RCE).

Accordingly, at issuance, the Office properly entered 534 days of patent term adjustment, having considered the 353 days of Office delay under the three-year pendency provision in conjunction with the 658 days of examination delay, reduced 124 days for applicants' delay.

In view thereof, no adjustment to the patent term will be made.

No additional fees are due in connection with this matter.

Telephone inquiries specific to this matter should be directed to the undersigned at (571) 272-3205.

Alesia M. Brown
Petitions Attorney
Office of Petitions

UNITED STATES PATENT AND TRADEMARK OFFICE

Commissioner for Patents
United States Patent and Trademark Office
P.O. Box 1450
Alexandria, VA 22313-1450
www.uspto.gov

Date : April 4, 2007

Patent No. : 7,179,383 B1
Inventor(s) : Porter, et al.
Issued : February 20, 2007
Title : **METHOD AND APPARATUS FOR MAGNETORESISTIVE MONITORING OF ANALYTES IN FLOW STREAMS**
Docket No. : 502704

Re: Request for Certificate of Correction

Consideration has been given your request for the issuance of a certificate of correction for the above-identified patent under the provisions of 37 CFR 1.322 and/or 1.323.

Assignees' names and addresses (assignment data) printed in a patent are based *solely* on information supplied in the appropriate space for identifying the assignment data, i.e., item 3 of the Fee(s) Transmittal Form PTOL-85B. After payment of the issue fee, correction of assignment data submitted on the PTOL-85B can only be done by Certificate of Correction under 37 CFR 1.323, with a request under 37 CFR 3.81(b).

A request for a patent to be corrected to state the name of the assignee must:

A. state that the assignment was submitted for recordation as set forth in 37 CFR 3.11 before issuance of the patent;
B. include a request for a certificate of correction under 37 CFR 1.323 along with the fee set forth in 37 CFR 1.20(a); and
C. include the processing fee set forth in 37 CFR 1.17(i).

If the request is granted, Certificates of Correction Branch will be notified that a Certificate of Correction may be issued.

See Manual of Patent Examining Procedure, Section 1481.01 (Rev. 3) (Oct. 2005).

Applicant has not included items A and or C above, accordingly, the request for Certificate of Correction to add or change the assignee data is denied.

Any request under 37 CFR 3.81(b) should be directed to the following address or facsimile number:

By mail:	Mail Stop PETITIONS Commissioner for Patents Post Office Box 1450 Alexandria, VA 22313-1450
By hand:	Customer Service Window Mail Stop Petitions Randolph Building 401 Dulany Street Alexandria, VA 22314
By fax:	571-273-8300 ATTN: Office of Petitions

If a fee (currently $100) was previously submitted for consideration of a Request for Certificate of Correction, under CFR 1.323, to correct assignment data, no additional fee is required.

Elisha Evans
For Cecelia Newman
Decisions & Certificates
of Correction Branch
(703) 308-9390 ext. 110

REINHART BOERNER VAN DEUREN P.C.
2215 PERRYGREEN WAY
ROCKFORD IL 61107

CBN/eme

UNITED STATES PATENT AND TRADEMARK OFFICE

Commissioner for Patents
United States Patent and Trademark Office
P.O. Box 1450
Alexandria, VA 22313-1450
www.uspto.gov

MAILED
FROM DIRECTORS OFFICE

JUL 18 2007

TECHNOLOGY CENTER 3600

In re Patent No. BLAISDELL, MARK KEVIN	:	
Issue Date: September 26, 2006	:	**DECISION GRANTING**
Appl No.: 10/896,262	:	**PETITION**
Filed: July 20, 2004	:	*37 CFR 1.324*
For: METHOD AND APPARATUS FOR GAS DISPLACEMENT WELL SYSTEMS	:	

This is a decision on the petition filed June 14, 2007 to correct inventorship under 37 CFR 1.324.

The petition is granted.

The patented file is being forwarded to Certificate of Corrections Branch for issuance of a certificate naming only the actual inventor or inventors.

David J. Bagnell
Supervisory Patent Examiner
Art Unit 3672
Technology Center 3600

GLENN PATENT GROUP
3475 EDISON WAY, SUITE L
MENLO PARK, CA 94025

UNITED STATES PATENT AND TRADEMARK OFFICE

Commissioner for Patents
United States Patent and Trademark Office
P.O. Box 1450
Alexandria, VA 22313-1450
www.uspto.gov

DATE: July 12, 2007
TO: Certificates of Correction Branch
FROM: David J. Bagnell
SPE, Art Unit 3672
SUBJECT: REQUEST FOR CERTIFICATE OF CORRECTION

Please issue a Certificate of Correction in U. S. Letters Patent No. 7,111,682 as specified on the attached Certificate.

David J. Bagnell, SPE
Art Unit 3672

UNITED STATES PATENT AND TRADEMARK OFFICE

CERTIFICATE

Patent No. 7,111,682
Patented: September 26, 2006

On petition requesting issuance of a certificate for correction of inventorship pursuant to 35 U.S.C. 256, it has been found that the above identified patent, through error and without deceptive intent, improperly sets forth the inventorship. Accordingly, it is hereby certified that the correct inventorship of this patent is:

Mark Kevin Blaisdell	Concord, CA (US)
Noah R. Heller	Corte Madera, CA (US)

David J. Bagnell
Supervisory Patent Examiner
Art Unit 3672

UNITED STATES PATENT AND TRADEMARK OFFICE

UNITED STATES DEPARTMENT OF COMMERCE
United States Patent and Trademark Office
Address: COMMISSIONER FOR PATENTS
P.O. Box 1450
Alexandria, Virginia 22313-1450
www.uspto.gov

IBM CORPORATION
LOTUS SOFTWARE
ONE ROGERS STREET
CAMBRIDGE, MA 02142

Mail Date: 04/20/2010

Applicant	: Redha M. Bournas	: DECISION ON REQUEST FOR
Patent Number	: 7660641	: RECALCULATION of PATENT
Issue Date	: 02/09/2010	: TERM ADJUSTMENT IN VIEW
Appliction No	: 10/896,269	: OF WYETH AND NOTICE OF INTENT TO
Filed	: 07/21/2004	: ISSUE CERTIFICATE OF CORRECTION
		:

The Request for Recalculation is **GRANTED** to the extent indicated.

The patent term adjustment has been determined to be **1518** days. The USPTO will *sua sponte* issue a certificate of correction reflecting the amount of PTA days determined by the recalculation.

Prior to the issuance of the certificate of correction, the USPTO will afford patentee an opportunity to be heard and request reconsideration. Accordingly, patentee has **one month or thirty (30) days**, whichever is longer, to file a request for reconsideration of this patent term adjustment calculation. See 35 U.S.C. 154(b)(3)(B)(ii) and 37 CFR 1.322(a)(4). No extensions of time will be granted under 37 CFR 1.136.

Patentee should use document code PET.OP if electronically filing a request for reconsideration of this patent term adjustment calculation. The patentee must also include the information required by 37 CFR 1.705(b)(2) and the fee required by 37 CFR 1.18(e). If patentee does not file a timely request for reconsideration of this patent term adjustment calculation including the information required by 37 CFR 1.705(b)(2) and the fee required by 37 CFR 1.18(e), the USPTO will issue a certificate of correction reflecting the PTA determination noted above.

Patentee should be aware that in order to preserve the right to review in the United States District Court for the District of Columbia of the USPTO patent term adjustment determination, patentee must ensure that he or she also take the steps required under 35 U.S.C. 154(b)(4)(A) in a timely manner. Nothing in the request for recalculation should be construed as providing an alternative time frame for commencing a civil action under 35 U.S.C. 154(b)(4)(A).

Any questions concerning this decision should be directed to the Office of Patent Legal Administration at 571-272-7702.

UNITED STATES PATENT AND TRADEMARK OFFICE

Commissioner for Patents
United States Patent and Trademark Office
P.O. Box 1450
Alexandria, VA 22313-1450
www.uspto.gov

SLATER & MATSIL
17950 PRESTON ROAD
SUITE 1000
DALLAS, TX 75252

COPY MAILED

APR 0 6 2005

OFFICE OF PETITIONS

In re Application of :
Chien-Chao Huang et al :
Application No. 10/896,270 : ON PETITION
Filed: July 21, 2004 :
Attorney Docket No. TSM03-1234 :

This is a decision on the petition, filed March 14, 2005, to correct the incorrectly spelled name of one of the named inventors.

The petition is **DISMISSED** as moot.

The declaration submitted with the original application listed the fifth-named inventor as "Chung-Hu Ge." The instant petition states that the name should have been "Chung-Hu Ke." Since the petition involves a name correction, rather than a name change. Therefore, the petition is dismissed as involving a moot issue.[1] A copy of the corrected filing receipt is enclosed.

No fee is required and none has been charged.

Telephone inquiries related to this decision should be directed to Wan Laymon at (571) 272-3220.

This matter is being referred to Technology Center AU 2818 for examination in due course.

Wan Laymon
Wan Laymon
Petitions Examiner
Office of Petitions
Office of the Deputy Commissioner
for Patent Examination Policy

Enclosure: Corrected Filing Receipt

---

[1] MPEP 605.04

UNITED STATES PATENT AND TRADEMARK OFFICE

UNITED STATES DEPARTMENT OF COMMERCE
United States Patent and Trademark Office
Address: COMMISSIONER FOR PATENTS
P.O. Box 1450
Alexandria, Virginia 22313-1450
www.uspto.gov

HAYNES AND BOONE, LLP
IP Section
2323 Victory Avenue
Suite 700
Dallas, TX 75219

Mail Date: 04/21/2010

Applicant	: Troy D. Drewry	: DECISION ON REQUEST FOR
Patent Number	: 7625380	: RECALCULATION of PATENT
Issue Date	: 12/01/2009	: TERM ADJUSTMENT IN VIEW
Appliction No	: 10/896,290	: OF WYETH AND NOTICE OF INTENT TO
Filed	: 07/21/2004	: ISSUE CERTIFICATE OF CORRECTION
		:

The Request for Recalculation is **GRANTED** to the extent indicated.

The patent term adjustment has been determined to be **1039** days. The USPTO will *sua sponte* issue a certificate of correction reflecting the amount of PTA days determined by the recalculation.

Prior to the issuance of the certificate of correction, the USPTO will afford patentee an opportunity to be heard and request reconsideration. Accordingly, patentee has **one month or thirty (30) days**, whichever is longer, to file a request for reconsideration of this patent term adjustment calculation. See 35 U.S.C. 154(b)(3)(B)(ii) and 37 CFR 1.322(a)(4). No extensions of time will be granted under 37 CFR 1.136.

Patentee should use document code PET.OP if electronically filing a request for reconsideration of this patent term adjustment calculation. The patentee must also include the information required by 37 CFR 1.705(b)(2) and the fee required by 37 CFR 1.18(e). If patentee does not file a timely request for reconsideration of this patent term adjustment calculation including the information required by 37 CFR 1.705(b)(2) and the fee required by 37 CFR 1.18(e), the USPTO will issue a certificate of correction reflecting the PTA determination noted above.

Patentee should be aware that in order to preserve the right to review in the United States District Court for the District of Columbia of the USPTO patent term adjustment determination, patentee must ensure that he or she also take the steps required under 35 U.S.C. 154(b)(4)(A) in a timely manner. Nothing in the request for recalculation should be construed as providing an alternative time frame for commencing a civil action under 35 U.S.C. 154(b)(4)(A).

Any questions concerning this decision should be directed to the Office of Patent Legal Administration at 571-272-7702.

UNITED STATES PATENT AND TRADEMARK OFFICE

Commissioner for Patents
United States Patent and Trademark Office
P.O. Box 1450
Alexandria, VA 22313-1450
www.uspto.gov

WALTER A. HACKLER, Ph.D.
LAW OFFICES
SUITE B
2372 S.E. BRISTOL STREET
NEWPORT BEACH CA 92660-0755

COPY MAILED

DEC 2 0 2004

OFFICE OF PETITIONS

In re Application of
James J. Perrault et al.
Application No. 10/896,303
Filed: July 21, 2004
Attorney Docket No. 3238

: DECISION DISMISSING
: PETITION

This is a decision on the petition filed October 15, 2004, requesting that the above-identified application be accorded a filing date of July 21, 2004, with Page 24 of the specification as a part of the original disclosure.

The application was filed July 21, 2004. On October 5, 2004, however, the Office of Initial Patent Examination (OIPE) mailed a Notice of Omitted Items in a Nonprovisional Application stating that the application had been accorded a filing date of July 21, 2004, but that, Page 24 of the specification (description and claims) appeared to have been omitted from the application.

In response, petitioner argues that a complete application was present on July 21, 2004, for filing date purposes. Petitioner also asserts that the entire disclosure of the parent application was incorporated by reference into the instant divisional application. And, since the divisional specification is a true copy of the parent application, the specification should be deemed to have been filed with this application. This argument is persuasive. In a divisional application filed under 1.53(b), an applicant may incorporate by reference the prior application by including, in the application-as-filed, a statement that such specifically enumerated prior application or applications are "hereby incorporated herein by reference." The inclusion of this incorporation by reference of the prior application(s) will permit an applicant to amend the continuing application to include any subject matter in such prior application(s), without the need for a petition. See MPEP 201.06(c). A review of the application-as-filed reveals that the instant divisional application transmittal contained such a statement.

Obviously, in view of the incorporation by reference in the prior application, page 24 of the specification is not new matter if it was a part of the disclosure of the prior application. Applicants may file an amendment to include page 24 of the specification

without a petition.

Accordingly, the petition is **DISMISSED**.

This application is being forwarded to the Office of Initial Patent Examination (OIPE) for further processing with a filing date of July 21, 2004, using the application papers received in the Office on that date and with an indication in Office records that Page 24 of the specification while not included with the application papers upon filing, was a part of the original disclosure.

Telephone inquiries regarding this decision should be directed to the undersigned Petitions Attorney at (571) 272-3212.

Patricia Faison-Ball

Patricia Faison-Ball
Senior Petitions Attorney
Office of Petitions

UNITED STATES PATENT AND TRADEMARK OFFICE

Commissioner for Patents
United States Patent and Trademark Office
P.O. Box 1450
Alexandria, VA 22313-1450
www.uspto.gov

OIPE JC22
JAN 0 3 2005
PATENT & TRADEMARK OFFICE

WALTER A. HACKLER, Ph.D.
LAW OFFICES
SUITE B
2372 S.E. BRISTOL STREET
NEWPORT BEACH CA 92660-0755

COPY MAILED

DEC 2 0 2004

OFFICE OF PETITIONS

In re Application of
James J. Perrault et al.
Application No. 10/896,303
Filed: July 21, 2004
Attorney Docket No. 3238

: DECISION DISMISSING
: PETITION

This is a decision on the petition filed October 15, 2004, requesting that the above-identified application be accorded a filing date of July 21, 2004, with Page 24 of the specification as a part of the original disclosure.

The application was filed July 21, 2004. On October 5, 2004, however, the Office of Initial Patent Examination (OIPE) mailed a Notice of Omitted Items in a Nonprovisional Application stating that the application had been accorded a filing date of July 21, 2004, but that, Page 24 of the specification (description and claims) appeared to have been omitted from the application.

In response, petitioner argues that a complete application was present on July 21, 2004, for filing date purposes. Petitioner also asserts that the entire disclosure of the parent application was incorporated by reference into the instant divisional application. And, since the divisional specification is a true copy of the parent application, the specification should be deemed to have been filed with this application. This argument is persuasive. In a divisional application filed under 1.53(b), an applicant may incorporate by reference the prior application by including, in the application-as-filed, a statement that such specifically enumerated prior application or applications are "hereby incorporated herein by reference." The inclusion of this incorporation by reference of the prior application(s) will permit an applicant to amend the continuing application to include any subject matter in such prior application(s), without the need for a petition. See MPEP 201.06(c). A review of the application-as-filed reveals that the instant divisional application transmittal contained such a statement.

Obviously, in view of the incorporation by reference in the prior application, page 24 of the specification is not new matter if it was a part of the disclosure of the prior application. Applicants may file an amendment to include page 24 of the specification

without a petition.

Accordingly, the petition is **DISMISSED**.

This application is being forwarded to the Office of Initial Patent Examination (OIPE) for further processing with a filing date of July 21, 2004, using the application papers received in the Office on that date and with an indication in Office records that Page 24 of the specification while not included with the application papers upon filing, was a part of the original disclosure.

Telephone inquiries regarding this decision should be directed to the undersigned Petitions Attorney at (571) 272-3212.

Patricia Faison-Ball

Patricia Faison-Ball
Senior Petitions Attorney
Office of Petitions

UNITED STATES PATENT AND TRADEMARK OFFICE

Commissioner for Patents
United States Patent and Trademark Office
P.O. Box 1450
Alexandria, VA 22313-1450
www.uspto.gov

MAILED

JUL 18 2005
Director's Office
Group 3700

Craig A. Gelifound
2049 Century Park East
Suite 3400
Los Angeles, CA 90067

In re application of Stanley W. Epstein	: :	**DECISION ON PETITION** **TO MAKE SPECIAL**
	:	**UNDER 37 CFR. 1.102(c)**
Serial Number: 10/896309 Filed: July 21, 2004	: :	

For: **ONBOARD SUPPLEMENTAL POWER SYSTEM AT VARYING HIGH ALTITUDES**

This is a decision on the petition filed on July 21, 2004, 2004, under 37 CFR. 1.102(c) to make special the above identified application because of the age/health of the applicant. Since the requirements of the M.P.E.P Section 708.02 IV have been met, the petition will be GRANTED.

The examiner is directed (1) to make an interference search for possible interfering applications, (2) to promptly examine this application out of turn, and (3) if any interfering application is discovered, to examine such application simultaneously and state in the first official letter of such application that it is being taken out of turn because of a possible interference.

Petitioner is advised that this application will continue to be special, throughout its entire prosecution and pendency, including interference or appeal, if any, only is Petitioner makes a prompt bona-fide effort, in response to each Office action, to place the application in condition for allowance, even if it is necessary to conduct an interview with the Examiner to accomplish this purpose.

Summary: Decision on Petition **GRANTED**.

Richard A. Bertsch
Director
Technology Center 3700
(571) 272-3750

rt: 7/14/05

UNITED STATES PATENT AND TRADEMARK OFFICE

Commissioner for Patents
United States Patent and Trademark Office
P.O. Box 1450
Alexandria, VA 22313-1450
www.uspto.gov

LLOYD DOUGLAS CLARK
15 CONRAD ST.
SAN FRANCISCO CA 94131

COPY MAILED

AUG 25 2009

OFFICE OF PETITIONS

In re Application of
CLARK, LLOYD DOUGLAS
Application No. 10/896,310
Filed: 07/21/2004
Title: WEB HEAT TRANSFER PRESS
WITH AIR BEARING

DECISION ON PETITION

This is a decision on the petition under 37 CFR 1.137(b), filed May 4, 2009, to revive the above-identified application.

The petition is **GRANTED**.

This application became abandoned for failure to pay the issue fee and publication fee as required by the Notice of Allowance and Fee(s) Due mailed on December 30, 2008, which set a three (3) month statutory period for reply. Accordingly, the application became abandoned on March 31, 2009. A Notice of Abandonment was mailed on April 27, 2009.

The petition satisfies the requirements of 37 CFR 1.137(b) in that petitioner has supplied (1) the reply in the form of payment of the issue fee and publication fee, (2) the petition fee, and (3) a proper statement of unintentional delay.

This matter is being forwarded to the Office of Data Management for issuance of a patent.

Telephone inquiries concerning the issuance of the application into a patent should be directed to the Office of Data Management, Customer Service at (571) 272-4200.

Telephone inquiries specifically concerning this decision should be directed to the undersigned at (571) 272-3211.

Christina Tartera Donnell

Christina Tartera Donnell
Senior Petitions Attorney
Office of Petitions

UNITED STATES PATENT AND TRADEMARK OFFICE

Commissioner for Patents
United States Patent and Trademark Office
P.O. Box 1450
Alexandria, VA 22313-1450
www.uspto.gov

Paper No.

IBM CORP. (DHJ)
c/o DAVID H. JUDSON
15950 DALLAS PARKWAY
SUITE 225
DALLAS TX 75248

MAILED

OCT 27 2009

OFFICE OF PETITIONS

In re Application of :
Hinton et al. : DECISION ON PETITION
Application No. 10/896,316 :
Filed: July 21, 2004 :
Atty Docket No.AUS920040364US1:

This is a decision on the PETITION FOR REVIVAL OF AN APPLICATION FOR PATENT ABANDONED UNINTENTIONALLY UNDER 37 CFR 1.137(b) filed March 26, 2009.

The petition is **GRANTED**.

The above-identified application became abandoned for failure to file a reply to the non-final Office action mailed September 26, 2007. This Office action set a shortened statutory period for reply of three (3) months, with extensions of time obtainable under § 1.136(a). No reply filed and no extension of time obtained, the application became abandoned December 27, 2007. A courtesy Notice of Abandonment was mailed on May 14, 2008.

The petition includes the required reply in the form of an amendment, the required statement of unintentional delay and payment of the petition fee. No terminal disclaimer is required.

As the person who signed the instant petition (including the statement of unintentional delay) was not appointed by the assignee until after the abandonment of the application, it is not apparent whether the person signing the statement of unintentional delay was in a position to have firsthand or direct knowledge of the facts and circumstances of the delay at issue. Nevertheless, such statement is being treated as having

been made as the result of a reasonable inquiry into the facts and circumstances of such delay. See 37 CFR 10.18(b) and Changes to Patent Practice and Procedure; Final Rule Notice, 62 Fed. Reg. 53131, 53178 (October 10, 1997), 1203 Off. Gaz. Pat. Office 63, 103 (October 21, 1997). In the event that such an inquiry has not been made, petitioner must make such an inquiry. If such inquiry results in the discovery that it is not correct that the entire delay in filing the required reply from the due date for the reply until the filing of a grantable petition pursuant to 37 CFR 1.137(b) was unintentional, petitioner must notify the Office.

Moreover, the instant application has been abandoned for an extended period of time. The Office is relying on petitioner's duty of good faith and candor in accepting the assertion that the entire delay in filing the required reply was unintentional. See 37 CFR 10.18.

Technology Center AU 2139 has been advised of this decision. The application is, thereby, forwarded to the examiner for consideration of the reply submitted on petition filed March 26, 2009.

Telephone inquiries specific to this matter should be directed to the undersigned at (571) 272-3219.

Nancy Johnson
Senior Petitions Attorney
Office of Petitions

UNITED STATES PATENT AND TRADEMARK OFFICE

Commissioner for Patents
United States Patent and Trademark Office
P.O. Box 1450
Alexandria, VA 22313-1450
www.uspto.gov

Date: 11/02/09

Patent No. : 7602723 B2
Ser. No. : 10/896,319
Inventor(s) : MANDATO, DAVIDE
Issued : 10/13/09
Title : **MODEL FOR ENFORCING DIFFERENT PHASES OF THE END-TO-END NEGOTIATION PROTOCOL (E2ENP) AIMING QOS SUPPORT FOR MULTI-STREAM AND MULTIMEDIA APPLICATIONS**
Docket No. : **282701US8XCIP**

Re: Request for Certificate of Correction

Consideration has been given your request for the issuance of a certificate of correction for the above-identified patent under the provisions of Rule(s) 1.322 and/or 1.323.

Assignees' names and addresses (assignment data) printed in a patent, are based *solely* on information supplied in the appropriate space for identifying the assignment data, i.e., item 3 of the Issue Fee Transmittal Form PTOL-85B. Granting of a request under 37 CFR 3.81(b) is required to correct applicant's error providing ***incorrect or erroneous*** assignment data, *before* issuance of a Certificate of Correction, under 37 CFR 1.323 *(see Manual of Patent Examining Procedures (M.P.E.P) Chp.1400, sect. 1481).* This procedure is required *at any time after the issue fee is paid*, including after issuance of the patent.

In view of the foregoing, your request, in this mater, is hereby denied.

A request to correct the Assignee under 37 CFR 3.81(b) should include:

A. **the processing fee set forth in 37 CFR 1.117(h) (currently $130);**
B. a statement that the failure to include the correct assignee name on the PTOL-85B was inadvertent; and
C. a copy of the Notice of Recordation of Assignment Document, reflecting the reel and frame number where the assignment(s) is recorded and/or reflecting proof of *the date* the assignment was submitted for recordation.

In the Request, Applicant(s) may request that the file be forwarded to Certificates of Correction Branch, for issuance of a Certificate of Correction, if the Request is granted.

Any request under 37 CFR 3.81(b) should be directed to the following address or facsimile number:

By mail: Mail Stop PETITIONS

Commissioner for Patents
Post Office Box 1450
Alexandria, VA 22313-1450

By hand: Customer Service Window
Mail Stop Petitions
Randolph Building
401 Dulany Street
Alexandria, VA 22314

By fax: (571) 273-0025
ATTN: Office of Petitions

If a fee (currently $100) was previously submitted for consideration of a Request for Certificate of Correction, under CFR 1.323, to correct assignment data, no additional fee is required.

Lamont M. Newsome

Lamonte M. Newsome
For Mary Diggs, Supervisor
Decisions & Certificates
Of Correction Branch
(703) 756-1574 or (703) 305-8309

OBLON, SPIVAK, MCCLELLAND MAIER & NEUSTADT, L.L.P.
1940 DUKE STREET
ALEXANDRIA VA 22314

LMN

UNITED STATES PATENT AND TRADEMARK OFFICE

Commissioner for Patents
United States Patent and Trademark Office
P.O. Box 1450
Alexandria, VA 22313-1450
www.uspto.gov

Date: 02/26/10

Patent No. : 7602723 B2
Ser. No. : 10/896,319
Inventor(s) : MANDATO, DAVIDE
Issued : 10/13/09
Title : **MODEL FOR ENFORCING DIFFERENT PHASES OF THE END-TO-END NEGOTIATION PROTOCOL (E2ENP) AIMING QOS SUPPORT FOR MULTI-STREAM AND MULTIMEDIA APPLICATIONS**
Docket No. : **282701US8XCIP**

Re: Request for Certificate of Correction

Consideration has been given your request for the issuance of a certificate of correction for the above-identified patent under the provisions of Rule(s) 1.322 and/or 1.323.

Assignees' names and addresses (assignment data) printed in a patent, are based *solely* on information supplied in the appropriate space for identifying the assignment data, i.e., item 3 of the Issue Fee Transmittal Form PTOL-85B. Granting of a request under 37 CFR 3.81(b) is required to correct applicant's error providing ***incorrect or erroneous*** assignment data, *before* issuance of a Certificate of Correction, under 37 CFR 1.323 *(see Manual of Patent Examining Procedures (M.P.E.P) Chp.1400, sect. 1481).* This procedure is required *at any time after the issue fee is paid*, including after issuance of the patent.

In view of the foregoing, your request, in this mater, is hereby denied **again**.

A request to correct the Assignee under 37 CFR 3.81(b) should include:

A. **the processing fee set forth in 37 CFR 1.17(i) (currently $130);**
B. a statement that the failure to include the correct assignee name on the PTOL-85B was inadvertent; and
C. a copy of the Notice of Recordation of Assignment Document, reflecting the reel and frame number where the assignment(s) is recorded and/or reflecting proof of *the date* the assignment was submitted for recordation.

In the Request, Applicant(s) may request that the file be forwarded to Certificates of Correction Branch, for issuance of a Certificate of Correction, if the Request is granted.

Any request under 37 CFR 3.81(b) should be directed to the following address or facsimile number:

By mail: Mail Stop PETITIONS

Commissioner for Patents
Post Office Box 1450
Alexandria, VA 22313-1450

By hand: Customer Service Window
Mail Stop Petitions
Randolph Building
401 Dulany Street
Alexandria, VA 22314

By fax: (571) 273-0025
ATTN: Office of Petitions

If a fee (currently $100) was previously submitted for consideration of a Request for Certificate of Correction, under CFR 1.323, to correct assignment data, no additional fee is required.

Lamonte M. Newsome

Lamonte M. Newsome
For Mary Diggs, Supervisor
Decisions & Certificates
Of Correction Branch
(703) 756-1574 or (703) 305-8309

OBLON, SPIVAK, MCCLELLAND MAIER & NEUSTADT, L.L.P.
1940 DUKE STREET
ALEXANDRIA VA 22314

LMN

UNITED STATES PATENT AND TRADEMARK OFFICE

Commissioner for Patents
United States Patent and Trademark Office
P.O. Box 1450
Alexandria, VA 22313-1450
www.uspto.gov

Ogilvy Renault LLP
1981 McGill College Avenue
Suite 1600
Montreal, QC H3A2Y3
Canada

COPY MAILED

JAN 15 2008

OFFICE OF PETITIONS

In re Application of	:	
Jean-Francois Rotge	:	
Application No. 10/896,332	:	DECISION ON PETITION
Filed: July 22, 2004	:	TO WITHDRAW
Attorney Docket No. 14906-2US CMB/AA/JI	:	FROM RECORD
	:	

This is a decision on the Request to Withdraw as attorney or agent of record under 37 C.F.R. § 1.36(b), filed August 17, 2007.

The request is **APPROVED**.

A grantable request to withdraw as attorney/agent of record must be signed by every attorney/agent seeking to withdraw or contain a clear indication that one attorney is signing on behalf of another/others. A request to withdraw will not be approved unless at least 30 (thirty) days would remain between the date of approval and the later of the expiration date of a time to file a response or the expiration date of the maximum time period which can be extended under 37 C.F.R. § 1.136(a).

The request was signed by C. Marc Benoit on behalf of all attorneys of record. All attorneys/agents have been withdrawn. Applicant is reminded that there is no attorney of record at this time.

All future correspondence will be directed to the first named inventor Jean-Francois Rotge at the address indicated below.

There is no outstanding Office action at this time.

Telephone inquiries concerning this decision should be directed to Terri Williams at 571-272-2991.

T. Williams
Terri Williams
Petitions Examiner
Office of Petitions

cc: **Jean-Francois Rotge**
1525, rue Bernard, app. 15
Montreal, H2V 1W7
Canada

UNITED STATES PATENT AND TRADEMARK OFFICE

UNITED STATES DEPARTMENT OF COMMERCE
United States Patent and Trademark Office
Address: COMMISSIONER FOR PATENTS
P.O. Box 1450
Alexandria, Virginia 22313-1450
www.uspto.gov

APPLICATION NUMBER	FILING OR 371(C) DATE	FIRST NAMED APPLICANT	ATTY. DOCKET NO./TITLE
10/896,332	07/22/2004	Jean-Francois Rotge	14906-2US CMB/AA/JI

CONFIRMATION NO. 8116

POWER OF ATTORNEY NOTICE

20988
OGILVY RENAULT LLP
1981 MCGILL COLLEGE AVENUE
SUITE 1600
MONTREAL, QC H3A2Y3
CANADA

OC000000027703047

Date Mailed: 01/15/2008

NOTICE REGARDING CHANGE OF POWER OF ATTORNEY

This is in response to the Power of Attorney filed 08/17/2007.

- The withdrawal as attorney in this application has been accepted. Future correspondence will be mailed to the new address of record. 37 CFR 1.33.

/tswilliams/

Office of Initial Patent Examination (571) 272-4000 or 1-800-PTO-9199

UNITED STATES PATENT AND TRADEMARK OFFICE

Commissioner for Patents
United States Patent and Trademark Office
P.O. Box 1450
Alexandria, VA 22313-1450
www.uspto.gov

MCANDREWS HELD & MALLOY
500 WEST MADISON STREET
SUITE 3400
CHICAGO, IL 60661

COPY MAILED

AUG 0 3 2005

OFFICE OF PETITIONS

In re Application of :
Michael A. Peshkin :
Application No. 10/896,348 : ON PETITION
Filed: July 20, 2004 :
Attorney Docket No. 15117US01 :

This is a decision on the petition under 37 CFR 1.313 (c)(2), filed July 29, 2005 and resubmitted on August 2, 2005, to withdraw the above-identified application from issue after payment of the issue fee.

The petition is **GRANTED**.

The above-identified application is withdrawn from issue for consideration of a submission under 37 CFR 1.114 (request for continued examination). See37 CFR 1.313(c)(2).

Petitioner is advised that the issue fee paid on April 5, 2005 in the above-identified application cannot be refunded. If, however, the above-identified application is again allowed, petitioner may request that it be applied towards the issue fee required by the new Notice of Allowance.[1]

Telephone inquiries should be directed to Wan Laymon at (571) 272-3220.

This matter is being referred to Technology Center AU 2855 for processing of the request for continued examination under 37 CFR 1.114.

Wan Laymon
Wan Laymon
Petitions Examiner
Office of Petitions
Office of the Deputy Commissioner
for Patent Examination Policy

---

[1] The request to apply the issue fee to the new Notice may be satisfied by completing and returning the new Issue Fee Transmittal Form PTOL-85(b), which includes the following language thereon: "Commissioner for Patents is requested to apply the Issue Fee and Publication Fee (if any) or re-apply any previously paid issue fee to the application identified above." Petitioner is advised that, whether a fee is indicated as being due or not, the Issue Fee Transmittal Form **must** be completed and timely submitted to avoid abandonment. Note the language in bold text on the first page of the Notice of Allowance and Fee(s) Due (PTOL-85).

UNITED STATES PATENT AND TRADEMARK OFFICE

COMMISSIONER FOR PATENTS
UNITED STATES PATENT AND TRADEMARK OFFICE
P.O. BOX 1450
ALEXANDRIA, VA 22313-1450

www.uspto.gov

Date : August 3, 2005

TO : Director, Office of Patent Publication

FROM : Office of the Deputy Commissioner
for Patent Examination Policy

SUBJECT : Withdrawal from Issue of

Applicant(s) : Michael A. Peshkin
Application No. : 10/896,348
Filed : July 20, 2004

The above-identified application has been assigned Patent No. 6,925,894 and an issue date of August 9, 2005.

It is hereby directed that this application be withdrawn from issue at the request of the applicant. Do not refund the issue fee.

The following erratum should be published in the Official Gazette if the above-identified application is published in the OG of August 9, 2005:

"All reference to Patent No. 6,925,894 to Michael A. Peshkin of Evanston, IL for FORCE SENSORS appearing in the Official Gazette of August 9, 2005 should be deleted since no patent was granted."

Wan Laymon

Wan Laymon
Petitions Examiner
Office of Petitions
Office of the Deputy Commissioner
for Patent Examination Policy

cc: Paul Harrison; MDW, Suite 04B03 (FAX-571-273-5468)
Deneise Boyd, MDE, Suite 03D39 (FAX-571-273-5124)
Mary Louise McAskill, South Tower, Suite 8C15(FAX 305-4372)
Niomi Farmer, South Tower, Suite 8C14 (FAX-305-4372)
Mary E. Johnson (Cookie), MDE, Suite 07C71 (FAX-571-273-0038)
Duane Davis (CDS), MDE, Suite 07D89
Tamara K. Greene, South Tower, Suite 08C13

UNITED STATES PATENT AND TRADEMARK OFFICE

Commissioner for Patents
United States Patent and Trademark Office
P.O. Box 1450
Alexandria, VA 22313-1450
www.uspto.gov

AUG 15 2006

MOTI SHAI
3524 Via del Prado
Calabasas, CA 91302

In re Application of: Moti Shai :
Appl. No.: 10/896,356 : DECISION ON PETITION
Filed: July 22, 2004 :
For: Adjustable Shelf hanging on Mirror and Shower
Frame with Auto Toothpaste Squeezer :
Pro Se Applicant :

This is a decision on the petition filed on January 30, 2006 by which petitioner respectfully requested that 1) the non-elected claims cancelled by petitioner in a communication submitted by petitioner on June 27, 2005, be reinstated and elected per intended Divisional Application; and 2) if this course of action is denied, a refund of the application fee be granted because petitioner never took advantage of a Continuation application. This petition is considered pursuant to 37 CFR 1.144 and 37 CFR 1.181, and no fee is required.

The petition is denied.

In order to understand why this petition cannot be granted, it is important for petitioner to understand the purpose of a Divisional Application, a Continuation application, and a Continuation-in-Part Application. The sections of the Manual of Patent Examination Procedures (MPEP) pertaining to these applications are copied for petitioner's convenience below.

201.06 [R-2] Divisional Application

A later application for an independent or distinct invention, carved out of a pending application and disclosing and claiming only subject matter disclosed in the earlier or parent application, is known as a divisional application or "division." >A divisional application is often filed as a result of a restriction requirement made by the examiner.< The divisional application must claim the benefit of the prior nonprovisional application under 35 U.S.C. 121 or 365(c). *>See MPEP § 201.11 for the conditions for receiving the benefit of the filing date of the prior application. The divisional application should set forth at least the portion of the earlier disclosure that is germane to the invention as claimed in the divisional application.

201.07 [R-3] Continuation Application

A continuation is a second application for the same invention claimed in a prior nonprovisional application and filed before the original prior application becomes abandoned or patented. The continuation application may be filed under 37 CFR 1.53(b) (or 1.53(d) if the application is a design application). The applicant in the continuation application must include at least one inventor named in the prior nonprovisional application. The disclosure presented in the continuation must be the same as that of the original application; i.e., the continuation should not include anything which would constitute new matter if inserted in the original application. The continuation application must claim the benefit of the prior nonprovisional application under 35 U.S.C. 120 or 365(c). >For more information on claiming the benefit of a prior nonprovisional application, see MPEP § 201.11.<

201.08 [R-3] Continuation-in-Part Application

A continuation-in-part is an application filed during the lifetime of an earlier nonprovisional application, repeating some substantial portion or all of the earlier nonprovisional application and *adding matter not disclosed* in the said earlier nonprovisional application. (*In re Klein*, 1930 C.D. 2, 393 O.G. 519 (Comm'r Pat. 1930)). The continuation-in-part application may only be filed under 37 CFR 1.53(b). The continuation-in-part application must claim the benefit of the prior nonprovisional application under 35 U.S.C. 120 or 365(c). >For more information on claiming the benefit of a prior nonprovisional application, see MPEP § 201.11.<

Careful review of the record of Application No. 10/896,356 reveals that it cannot be considered a Continuation or Divisional application of Application No. 10/243,376.

In Application No. 10/243,376, petitioner originally submitted five figures of drawings (original figures 1-5) along with a specification and 22 claims for a first embodiment of petitioner's invention. A first Office action was rendered by the examiner on October 8, 2003 rejecting all 22 claims.

In response to this first Office action, petitioner cancelled the original specification, the original 22 claims, and original five figures. Petitioner then substituted a new specification describing new figures 6 -10 for a second embodiment of petitioner's invention and added new claims 23-35 for the second embodiment.

A second final Office action dated May 24, 2004 was rendered by the examiner objecting to the substituted drawings and specification as "new matter" under 35 U.S.C.

132, which clearly states that such "new matter" is not permitted to be added to the application beyond its filing date. Claims 23-35 were rejected under 35 U.S.C. 112, first paragraph, as not being supported by the specification as originally filed because it was deleted by petitioner.

Since petitioner did not respond to the final rejection within the six month statutory period for response, the application was legally abandoned effective November 25, 2004 as required by 35 U.S.C 133. Petitioner was reprised of the abandonment in a Notice of Abandonment dated January 24, 2005. Petitioner's attention is directed to the cover letter of the final rejection dated May 24, 2004, wherein it is clearly stated, "Failure to reply within the set or extended statutory period for reply will, by statute, cause the application to become ABANDONED (35 U.S.C. 133).

While application No 10/243,376 was still pending, petitioner filed a second application No. 10/896,356 and claimed priority back to application No. 10/243,376 in accordance with 35 U.S.C. 120. The disclosure of application No. 10/896,356 includes subject matter substantially the same as the "new matter" that was added to the earlier application with the addition of new subject matter illustrated in figures 6 and 7. Figures 1-5 are identical to figures 6-10 of the earlier application. The specification is limited to the description of figures 1-7, which is totally different from the disclosure of application No. 10/243,376. In order for a subsequently filed application to be considered as "continuation application" it must be for the same invention claimed in the earlier application and must have the same disclosure as the original application. See MPEP section 201.07 cited above. Such is not the case here, and therefore application No. 10/896,356 cannot be a continuation application of application No. 10/243,376.

Likewise, application No. 10/896,356 cannot be considered a "divisional application" of application No. 10/243,376 because the subject matter presented in application No. 10/896,356 was never "carved out" of application No. 10/243,376. See the MPEP section 201.06 cited above. In accordance with 35 U.S.C. 132, petitioner was not allowed to have such subject matter entered into the record of application No. 10/243,376.

Application No. 10/896,356 can be considered a "continuation-in-part" application of application No. 10/243,376 only to the extent of the subject matter common to both applications, which appears to be very little. See the MPEP section 201.08 cited above. In order to satisfy the requirements for gaining priority to the filing date of the earlier application, the first sentence of the specification of the latter filed application must include the statement, "This application is a continuation-in-part application of application No. 10/243,376 now abandoned." It is noted that petitioner has not done so.

In any event, even if petitioner perfects such a claim for priority, petitioner will only enjoy the benefit of the actually filing date of application No. 10/896,356 since the subject matter therein was not in petitioner's possession at the time of the earlier filing date as evidenced by the earlier disclosure.

In application No. 10/896,356, Petitioner received a first Office action dated February 8, 2005, which required Petitioner to elect a single invention for prosecution from three distinct disclosed inventions grouped as:

I. the adjustable shelves (figures 1-5, claims 1-4);
II. the manually operated toothpaste dispenser (figures 2 and 3, claims 5-10);
III. the automatic toothpaste dispenser (figures 6 and 7, claims 11-13).

The requirement is considered proper in that the disclosed and claimed embodiments are distinct for reasons set forth in the Office action and each would involve a separate search and examination. Petitioner elected the group II claims without traversing the requirement and received an action on such claims.

In an amendment dated February 28, 2005, petitioner cancelled claims 1-13 and submitted claims 14-20 drawn to the non-elected invention illustrated in figures 6 and 7. Such amendment was considered non-responsive as indicated in the Office letter dated June 6, 2005.

Petitioner then requested via FAX received June 27, 2005 that claims 14 –20 be cancelled and previous claims 5-10 be revived. The examiner complied to the request in the Office action dated September 16, 2005 by entering new claims 21-26, which were identical to previous claims 5-10.

A second action on the merits was also rendered and made final. Although the restriction requirement was never formally made final, which is a requirement under 37 CFR 1.144 for petitioner to petition the restriction, in view of the examiner complying with the petitioner's request and the fact that petitioner has never properly traversed the requirement, the undersigned also considers the restriction requirement made final. Again, petitioner was given a statutory period to reply not to exceed six months from the date of this final Office action.

Although petitioner did respond to the September 16, 2005 final Office action via FAX received on October 11, 2005, it is not fully responsive to the issues presented in the Office action, i.e., reasons why the restriction requirement, objections and rejections are presented therein are improper. Thus, such response can only be considered non-responsive.

As a consequence, since no proper response to the final Office action dated September 16, 2005 has been received within the six month statutory period for response, this case is legally abandoned in accordance with 35 U.S.C. 133.

Should petitioner wish to pursue the patentability of the alleged inventions, a petition to revive this application from unintentional abandonment must be submitted along with the appropriate fees. Once such petition is granted, petitioner may continue the prosecution of claims 5-10 in this application and file a divisional application for claims 14-20 for the non-elected invention.

In summary, the restriction requirement rendered in the Office action dated February 8, 2005 is considered proper and stands. Petitioner's request to have claims 14-20 reinstated and examined in this application is denied. Since there was no error in the prosecution of this case, petitioner's request for a refund is denied.

The application is being forwarded to the Supervisory Patent Examiner of Art Unit 3754 who will have the examiner mail a Notice of Abandonment.

PETITION DENIED.

Frederick R. Schmidt, Director
Technology Center 3700

UNITED STATES PATENT AND TRADEMARK OFFICE

Commissioner for Patents
United States Patent and Trademark Office
P.O. Box 1450
Alexandria, VA 22313-1450
www.uspto.gov

APR 27 2007

MOTI SHAI
3524 Via Del Prado
Calabasas, CA 91302

In re Application of:
SHAI, MOTI
Serial No.: 10/896,356
Filed: Jun. 22, 2004
Docket: NONE
Title: ADJUSTABLE SHELF HANGING ON MIRROR AND SHOWER FRAME WITH AUTO TOOTHPASTE SQUEEZER

DECISION ON PETITION

This is a decision on the petition filed on Sep. 22, 2006 by which petitioner respectfully requested that the non-elected claims 11-13 be reinstated and examined on the merits. The petitioner requests reconsideration of the petition decision rendered on Aug. 15, 2006 which denied reinstatement and examination of the non-elected claims. This petition is being considered pursuant to 37 CFR 1.144 and 37 CFR 1.181.

The petition is **DENIED**.

The record shows that:

1) On Feb. 8, 2005, the examiner issued a non-final Office action which included a restriction requirement between Group I, Claims 1-4 directed to adjustable shelves and Group II, Claims 5-13 directed to a tube squeezing device. The restriction requirement also required applicant to elect one of two distinct species including: 1) A manually actuated system and 2) an automatic system. Petitioner elected Group II (tube squeezing device) and the species directed to a manually actuated system without traverse. The examiner conducted a search and examination of the claims elected without traverse.
2) On Feb. 18, 2005 a telephone interview was conducted between the examiner and the petitioner. The petitioner inquired why non-elected claims 11-13 were not examined in the application. The examiner explained that the petitioner had elected the species directed to the manually actuated device depicted in figure 2 and that petitioner had already received an action on the merits of the elected invention.
3) On Feb. 28, 2005 the petitioner filed an amendment canceling all of the previously pending claims 1-13 and presenting new claims 14-20 directed only to the non-elected invention (the automatic system).

4) On Jun. 3, 2005, the examiner issued a notice of non-responsive amendment in accordance with MPEP 821.03 because petitioner canceled all claims drawn to the elected invention and presented only claims drawn to the non-elected invention.
5) On Jun. 27, 2005, the petitioner filed an amendment canceling claims 14-20 directed to the non-elected invention and requested that previously canceled claims 5-10 be revived and examined on their merits taking into consideration applicant's arguments attached in the remarks section of the amendment.
6) On Sep. 16, 2005, the examiner issued a final Office action and reinstated canceled claims 5-10 as new claims 21-26. The examiner further maintained the same grounds of rejection of the claims in the previous office action and made the action final.
7) On Jan. 30, 2006, the petitioner filed a petition requesting that the non-elected claims canceled in the Jun. 27, 2005 amendment be reinstated and examined on the merits.
8) On Aug. 15, 2006, a decision on the petition filed Jan. 30, 2006 was rendered that denied the petition. The petition decision states that the restriction rendered in the Office action dated Feb. 8, 2005 was proper. Petitioner's request to have claims directed to the non-elected invention was denied.
9) On Sep. 22, 2006, the petitioner filed the current request to have non-elected claims 11-13 be reinstated and examined on the merits.
10) On Dec. 1, 2006, the examiner issued a notice of abandonment since no proper response to the final Office action dated Sep. 16, 2005 was received within the six month statutory period for response in accordance with 35 USC 133.

Discussion and analysis

Petitioner's arguments in the current petition that petitioner intended to have claims 11-13 prosecuted on the merits, citing possible miscommunication between the examiner and the petitioner, is not convincing. Petitioner is reminded that according to 37 CFR 1.2, all business with the Office should be transacted in writing. The action of the Office will be based exclusively on the written record in the Office. Accordingly, what was or was not agreed to during conversations with the examiner has no bearing upon the decision herein.

A review of the record shows that petitioner received a first Office action dated Feb. 8, 2005 which required petitioner to elect a single invention for prosecution from three distinct disclosed inventions grouped as:

I. the adjustable shelves (figures 1-5, claims 1-4);
II. the manually operated toothpaste dispenser (figures 2 and 3, claims 5-10);
III. the automatic toothpaste dispenser (figures 6 and 7, claims 11-13).

The requirement is considered proper in that the disclosed and claimed embodiments are distinct for reasons set forth in the Office action and each would involve a separate search and

examination. Petitioner elected the group II claims without traversing the requirement and received an action on the merits.

On Feb. 28, 2005, petitioner canceled claims 1-13 and submitted claims 14-20 drawn to the non-elected invention illustrated in figures 6 and 7. The amendment was considered non-responsive as indicated in the Office letter dated Jun. 6, 2005.

Petitioner then requested in a response field Jun. 27, 2005 that claims 14-20 be canceled and that previous claims 5-10 be revived. The examiner complied with the request by petitioner and issued an Office action dated Sep. 16, 2005 by entering new claims 21-26 which were identical to previous claims 5-10.

A second action on the merits was rendered and the action was made final. Although the restriction requirement was never formally made final, which is a requirement under 37 CFR 1.144 for petitioner to petition the restriction, in view of the examiner complying with the petitioner's request and the fact that petitioner has never properly traversed the restriction requirement, the undersigned also considers the restriction made final.

In view of the record, the restriction requirement rendered in the Office action dated Feb. 8, 2005 is considered proper and stands. Petitioner's request to have non-elected claims 11-13 reinstated and examined in this application is denied.

Any inquiry regarding this decision should be directed to Marc Jimenez, Training Quality Assurance Specialist, at (571) 272-4530.

The petition is denied.

Frederick R. Schmidt, Director
Technology Center 3700

UNITED STATES PATENT AND TRADEMARK OFFICE

Commissioner for Patents
United States Patent and Trademark Office
P.O. Box 1450
Alexandria, VA 22313-1450
www.uspto.gov

Christopher J. McDonald, Esq.
HOFFMAN, WASSON & GITLER, P.C.
Suite 522
2461 South Clark Street
Arlington VA 22202

COPY MAILED

MAR 29 2005

OFFICE OF PETITIONS

In re Application of	:
Kupferberg & Robitaille	:
Application No. 10/896,369	: DECISION ACCORDING STATUS
Filed: July 22, 2004	: UNDER 37 CFR 1.47(a).
Attorney Docket No. A-9014.RNFMP/bh	:
For: HIGH VELOCITY AND HIGH DILUTION	:
EXHAUST SYSTEM	

This is in response to the petition under 37 CFR 1.47(a), filed February 14, 2005.

The petition is granted.

Petitioner has shown that the non-signing inventor, Marc Robitaille, has constructively refused to join in the filing of the above-identified application after having been presented with the application papers. Specifically, the declaration/statement of facts of co-inventor Minel Kupferberg establishes that the inventor was mailed the application papers, including the specification, claims and drawings, but failed to respond to the request that he sign the declaration. In addition, the inventor has engaged in a pattern of avoidance by not replying to e-mails and hanging up on telephone calls from Mr. Kupferberg. Petitioner has submitted a declaration in compliance with 37 CFR 1.63 and 1.64. Regarding fees, the current fee due for filing a petition under 37 CFR 1.47(a) is $200.00. Petitioner submitted only $130.00. Petitioner's deposit account was charged the balance due, or $70.00 on February 15, 2005.

This application and papers have been reviewed and found in compliance with 37 CFR 1.47(a). This application is hereby accorded Rule 1.47(a) status.

As provided in Rule 1.47(c), this Office will forward notice of this application's filing to the non-signing inventor at the address given in the petition. Notice of the filing of this application will also be published in the Official Gazette.

After this decision is mailed, the above-identified application will be forwarded Technology Center GAU 3746 for examination in due course.

Telephone inquiries should be directed to the undersigned at (571) 272-3230.

E. Shirene Willis

E. Shirene Willis
Senior Petitions Attorney
Office of Petitions

UNITED STATES PATENT AND TRADEMARK OFFICE

Commissioner for Patents
United States Patent and Trademark Office
P.O. Box 1450
Alexandria, VA 22313-1450
www.uspto.gov

MARC ROBITAILLE
860 HELENE ROAD
GATINEAU, QUEBEC
J8M 1M5
CANADA

COPY MAILED

MAR 29 2005

OFFICE OF PETITIONS

In re Application of
Kupferberg & Robitaille
Application No. 10/896,369
Filed: July 22, 2004
Attorney Docket No. A-9014.RNFMP/bh
For: HIGH VELOCITY AND HIGH DILUTION EXHAUST SYSTEM

LETTER

Dear Mr. Robitaille:

You are named as a joint inventor in the above identified United States patent application, filed under the provisions of 35 U.S.C. 116 (United States Code), and 37 CFR 1.47(a), Rules of Practice in Patent Cases. Should a patent be granted on the application you will be designated therein as a joint inventor.

As a named inventor you are entitled to inspect any paper in the file wrapper of the application, order copies of all or any part thereof (at a prepaid cost per 37 CFR 1.19) or make your position of record in the application. Alternatively, you may arrange to do any of the preceding through a registered patent attorney or agent presenting written authorization from you. If you care to join the application, counsel of record (see below) would presumably assist you. Joining in the application would entail the filing of an appropriate oath or declaration by you pursuant to 37 CFR 1.63.

Requests for information regarding your application should be directed to the File Information Unit at (703)308-2733. Information regarding how to pay for and order a copy of the application, or a specific paper in the application, should be directed to Certification Division at (703)308-9726 or 1(800)972-6382 (outside the Washington D.C. area).

Telephone inquiries regarding this communication should be directed to the undersigned at (571) 272-3230.

E Shirene Willis

E. Shirene Willis
Senior Petitions Attorney
Office of Petitions

ATTORNEY OF RECORD: Christopher J. McDonald, Esq.
HOFFMAN, WASSON & GITLER, P.C.
Suite 522
2461 South Clark Street
Arlington VA 22202

UNITED STATES PATENT AND TRADEMARK OFFICE

Commissioner for Patents
United States Patent and Trademark Office
P.O. Box 1450
Alexandria, VA 22313-1450
www.uspto.gov

Christopher J. McDonald
Hoffman, Wasson & Gitler
2461 South Clark Street
Crystal Center 2 – Suite 522
Arlington, VA 22202

MAILED

SEP 1 2 2005

Director's Office
Group 3700

In re application of Minel Kupferberg et al.	:	**DECISION ON PETITION TO MAKE SPECIAL UNDER 37 CFR. 1.102(c)**
Serial Number: 10/896,369 Filed: July 22, 2004	:	

For: **HIGH VELOCITY AND HIGH DILUTION EXHAUST SYSTEM**

This is a decision on the petition filed on April 15, 2005, under 37 CFR. 1.102(c) to make special the above identified application because of the age/health of the applicant. Since the requirements of the M.P.E.P Section 708.02 IV have been met, the petition will be GRANTED.

The examiner is directed (1) to make an interference search for possible interfering applications, (2) to promptly examine this application out of turn, and (3) if any interfering application is discovered, to examine such application simultaneously and state in the first official letter of such application that it is being taken out of turn because of a possible interference.

Petitioner is advised that this application will continue to be special, throughout its entire prosecution and pendency, including interference or appeal, if any, only is Petitioner makes a prompt bona-fide effort, in response to each Office action, to place the application in condition for allowance, even if it is necessary to conduct an interview with the Examiner to accomplish this purpose.

Summary: Decision on Petition **GRANTED**.

Richard A. Bertsch
Director
Technology Center 3700
(571) 272-3750

rt: 9/8/05

UNITED STATES PATENT AND TRADEMARK OFFICE

Commissioner for Patents
United States Patent and Trademark Office
P.O. Box 1450
Alexandria, VA 22313-1450
www.uspto.gov

DONALD J BERNARD ESQ
PO BOX 58888
SEATTLE WA 98138-1888

COPY MAILED
AUG 0 7 2006
OFFICE OF PETITIONS

In re Application of	:	
Khounsombath, et al.	:	
Application No. 10/896,381	:	ON PETITION
Filed: July 21, 2004	:	
Title: Key Unit Holder	:	

This is a decision on the petition to revive under 37 CFR 1.137(b), filed March 17, 2006.

The petition under 37 CFR 1.137(b) is **GRANTED**.

The above-identified application became abandoned for failure to timely file a reply in response to the non-final Office action mailed August 17, 2005. This Office action set a shortened statutory period for reply of three (3) months. No extensions of time under 37 CFR 1.136(a) were obtained. No reply having been received, the above identified application became abandoned on November 18, 2005. A Notice of Abandonment was mailed on March 7, 2006.

With the instant petition, applicant paid the petition fee, submitted the required reply in the form of an amendment, and made the proper statement of unintentional delay.

Receipt of the $750 petition fee is acknowledged.

The matter is being forwarded to Group Art Unit 3676 for consideration of the amendment filed March 17, 2006.

Telephone inquiries related to this decision should be directed to the undersigned at (571)272-3207.

Cliff Congo
Petitions Attorney
Office of Petitions

UNITED STATES PATENT AND TRADEMARK OFFICE

UNITED STATES DEPARTMENT OF COMMERCE
United States Patent and Trademark Office
Address: COMMISSIONER FOR PATENTS
P.O. Box 1450
Alexandria, Virginia 22313-1450
www.uspto.gov

3M INNOVATIVE PROPERTIES COMPANY
PO BOX 33427
ST. PAUL, MN 55133-3427

Mail Date: 04/20/2010

Applicant	: Brinda B. Lakshmi	: DECISION ON REQUEST FOR
Patent Number	: 7658994	: RECALCULATION of PATENT
Issue Date	: 02/09/2010	: TERM ADJUSTMENT IN VIEW
Appliction No	: 10/896,392	: OF WYETH AND NOTICE OF INTENT TO
Filed	: 07/22/2004	: ISSUE CERTIFICATE OF CORRECTION
		:

The Request for Recalculation is **GRANTED** to the extent indicated.

The patent term adjustment has been determined to be **565** days. The USPTO will *sua sponte* issue a certificate of correction reflecting the amount of PTA days determined by the recalculation.

Prior to the issuance of the certificate of correction, the USPTO will afford patentee an opportunity to be heard and request reconsideration. Accordingly, patentee has **one month or thirty (30) days**, whichever is longer, to file a request for reconsideration of this patent term adjustment calculation. See 35 U.S.C. 154(b)(3)(B)(ii) and 37 CFR 1.322(a)(4). No extensions of time will be granted under 37 CFR 1.136.

Patentee should use document code PET.OP if electronically filing a request for reconsideration of this patent term adjustment calculation. The patentee must also include the information required by 37 CFR 1.705(b)(2) and the fee required by 37 CFR 1.18(e). If patentee does not file a timely request for reconsideration of this patent term adjustment calculation including the information required by 37 CFR 1.705(b)(2) and the fee required by 37 CFR 1.18(e), the USPTO will issue a certificate of correction reflecting the PTA determination noted above.

Patentee should be aware that in order to preserve the right to review in the United States District Court for the District of Columbia of the USPTO patent term adjustment determination, patentee must ensure that he or she also take the steps required under 35 U.S.C. 154(b)(4)(A) in a timely manner. Nothing in the request for recalculation should be construed as providing an alternative time frame for commencing a civil action under 35 U.S.C. 154(b)(4)(A).

Any questions concerning this decision should be directed to the Office of Patent Legal Administration at 571-272-7702.

UNITED STATES PATENT AND TRADEMARK OFFICE

Commissioner for Patents
United States Patent and Trademark Office
P.O. Box 1450
Alexandria, VA 22313-1450
www.uspto.gov

COPY MAILED

AUG 0 2 2006

OFFICE OF PETITIONS

Hemingway & Hanson, LLP
8117 Preston Road
Suite 460
Dallas TX 75225

In re Application of	:	
Moreland, et al.	:	
Application No. 10/896,414	:	DECISION ON PETITION
Filed: July 22, 2004	:	TO WITHDRAW
Attorney Docket No. TIDEL-P1001	:	FROM RECORD
	:	

This is a decision on the Request to Withdraw as attorney or agent of record under 37 C.F.R. § 1.36(b), filed January 30, 2006.

The request is **APPROVED**.

A grantable request to withdraw as attorney/agent of record must be signed by every attorney/agent seeking to withdraw or contain a clear indication that one attorney is signing on behalf of another/others. A request to withdraw will not be approved unless at least 30 (thirty) days would remain between the date of approval and the later of the expiration date of a time to file a response or the expiration date of the maximum time period which can be extended under 37 C.F.R. § 1.136(a).

The request was signed by D. Scott Hemingway on behalf of all attorneys of record.

Applicant is reminded that there is no attorney of record at this time.

The request to change the correspondence of record is not acceptable as the requested correspondence address is not that of: (1) the first named signing inventor; or (2) an intervening assignee of the entire interest under 37 C.F.R 3.71. All future communications from the Office will be directed to the first named signing inventor at the first copied address below until otherwise properly notified by the applicant.

Telephone inquiries concerning this decision should be directed to April Wise at 571-272-1642.

Amelia Au
Petitions Examiner
Office of Petitions

cc: Flynt Moreland
6224 Trailwood Drive
Plano, TX 75024

cc: Gordon Russell
Kane, Russell, Coleman & Logan P.C.
1601 Elm Street
Suite 3700
Dallas, TX 75201

UNITED STATES PATENT AND TRADEMARK OFFICE

Commissioner for Patents
United States Patent and Trademark Office
P.O. Box 1450
Alexandria, VA 22313-1450
www.uspto.gov

DOUGLAS G GLANTZ
ATTORNEY AT LAW
5260 DEBORAH COURT
DOYLESTOWN PA 18902-1949

COPY MAILED

AUG 2 1 2007

OFFICE OF PETITIONS

In re Application of
Gary L. Reinert, Sr.
Application No. 10/896,416
Filed: December 17, 2004
Attorney Docket No. 562GLR
For: STAINLESS STEEL AIRPORT LIGHT CANNISTER APPARATUS AND METHOD

ON PETITION

This is a decision on the petition filed April 13, 2007, requesting that the application be accorded a filing date of July 22, 2004.

The petition is **GRANTED** to the extent described below.

The application was filed on July 22, 2004. However, on November 26, 2004, The Office of Initial Patent Examination mailed a "Notice to File Corrected Application Papers" (Notice) stating, *inter alia*, that the application had been accorded a filing date of July 22, 2004, and advising applicant that Figures 13 and 14 appeared to have been omitted.

In response, on December 17, 2004 (certificate of mailing date December 15, 2007), applicant filed 8 sheets of formal drawings that included Figures 13 and 14. It

The Office processed these drawings and mailed a Notice of Incomplete Reply (Nonprovisional) on January 3, 2005. The Notice of Incomplete Reply (Nonprovisional) required an oath or declaration covering the newly submitted items, a late declaration surcharge of $65.00, a $250.00 search fee, and a $100.00 examination fee.

Applicant submitted a supplemental declaration and argued that no fees are believed due in connection with the filing of the supplemental declaration. In addition, applicant argued that the search fee and examination fees were inapplicable because the application was filed on July 22, 2004. Nonetheless, applicant provided authorization to charge any fees required to deposit account no. 07-1380.

The Office mailed a non-final Office action on November 17, 2005 that listed the application's filing date as December 17, 2004.

Petitioner requests reinstatement of the July 22, 2004 filing date and argue that the omitted drawings submitted on December 17, 2004 should be considered part of the original application papers, because they were originally filed in prior application No.10/393,150, the entire disclosure of which was incorporated by reference into the present application at the time of the present application's filing.

The mailing of the November 26, 2004 Notice permited applicant to either: (1) promptly establish prior receipt in the PTO of the items at issue (generally by way of a date-stamped postcard receipt (MPEP 503)), or (2) promptly submit the omitted items in a nonprovisional application and accept the date of such submission as the application filing date. An applicant asserting that the missing items were in fact deposited in the USPTO with the application papers must file a petition (and the appropriate petition fee) with evidence of such deposit. An applicant desiring to submit the omitted items in a nonprovisional application and accept the date of such submission as the application filing date must file any omitted items with an oath or declaration in compliance with 37 CFR 1.63 and 1.64 referring to such items and a petition under 37 CFR 1.182 (with the petition fee under 37 CFR 1.17(h)) requesting the later filing date within two months of the date of the "Notice of Omitted Items" (37 CFR 1.181(f)).

In this case, on December 17, 2004 (certificate of mailing date December 15, 2007), applicant neither asserted that the missing drawings were actually deposited in the USPTO on July 22, 2004 with the other application papers nor requested a later filing date. Applicant merely filed the omitted figures.

Petitioner wishes to retain the July 22, 2004 filing date for the above-identified application. This is possible only if Figures 13 and 14 are added to the application **after** the filing date issue has been resolved.

Additional figures may be entered by the primary examiner without a petition so long as the pages contain no new matter.

MPEP 201 (IV) Incorporation by Reference states (in pertinent part) that:

> The inclusion of this incorporation by reference statement will permit an applicant to amend the continuation or divisional application to include subject matter from the prior application(s), without the need for a petition provided the continuation or divisional application is entitled to a filing date notwithstanding the incorporation by reference. For applications filed prior to September 21, 2004, the incorporation by reference statement may appear in the transmittal letter or in the specification.

If applicant desires that Figures 13 and 14 be added to the application, the appropriate procedure is by way of formal amendment requesting the entry of the figures. Any such amendment will be considered by the examiner.

Regarding finances, as the application's filing date is July 22, 2004, therefore, the December 8, 2004 fee changes do not apply to the application. The original filing fee of $385.00 will be charged to applicant's deposit account. The $65.00 late surcharge, the $250.00 search fee, the $100.00 examination fee, and the $150.00 filing fee will be refunded to applicant's deposit account.

The application is being returned to the Office of Initial Patent Examination for further processing with a filing date of **July 22, 2004**. Figures 13 and 14 filed on December 17, 2004 (certificate of mailing date December 15, 2007), will not be considered part of the original application papers. Only the papers filed on July 22, 2004 constitute the original application papers.

Telephone inquiries specific to this matter should be directed to the undersigned at (571) 272-3230.

Shirene Willis Brantley

Shirene Willis Brantley
Senior Petitions Attorney
Office of Petitions
Office of the Deputy Commissioner
for Patent Examination Policy

UNITED STATES PATENT AND TRADEMARK OFFICE

Commissioner for Patents
United States Patent and Trademark Office
P.O. Box 1450
Alexandria, VA 22313-1450
www.uspto.gov

THE WEBB LAW FIRM, P.C.
700 KOPPERS BUILDING
436 SEVENTH AVENUE
PITTSBURGH, PA 15219

MAILED

AUG 12 2009

OFFICE OF PETITIONS

In re Application of Gary Reinert Sr. :
Application No. 10/896,416 :
Filing Date: July 22, 2004 :
Attorney Docket No. 5433-072222 :

Decision Dismissing Petition
Under 37 CFR 1.78(a)(3)

This is a decision on the petition under 37 CFR 1.78(a)(3), filed March 16, 2009, to accept an unintentionally delayed claim under 35 U.S.C. §120 for the benefit of priority to several prior-filed nonprovisional applications.

The petition is **DISMISSED**.

A petition for acceptance of a claim for late priority under 37 CFR 1.78(a)(3) is only applicable to those applications filed on or after November 29, 2000 and after the expiration of the period specified in 37 CFR 1.78(a)(2)(ii). In addition, the petition under 37 CFR 1.78(a)(3) must be accompanied by:

(1) The reference required by 35 U.S.C. § 120 and 37 CFR 1.78(a)(2)(i) to the prior-filed application, unless previously submitted;
(2) The surcharge set forth in § 1.17(t); and
(3) A statement that the entire delay between the date the claim was due under 37 CFR 1.78(a)(2)(ii) and the date the claim was filed was unintentional. The Director may require additional information where there is a question whether the delay was unintentional.

The petition fails to satisfy item (1) above. Specifically, the priority claims set forth in the reference are improper for the reasons discussed in this decision.

Facts

Petitioner seeks for the application to include priority claims indicating:
(1) The instant application is a divisional of Application No. 10/393,150;
(2) Application No. 10/393,150 is a divisional of Application No. 09/796,394;
(3) Application No. 09/796,394 is a continuation-in-part of Application No. 09/514,089;

(4) Application No. 09/514,089 is a continuation-in-part of Application No. 09/113,980;
(5) Application No. 09/113,980 is a continuation-in-part of Application No. 08/687,809; and
(6) Application No. 08/687,809 is a continuation-in-part of:
    (A) Application No. 08/002,014;
    (B) Application No. 08/058,356; and
    (C) Application No. 08/464,736.

The instant application already includes priority claims (1), (2), and (3) set forth above and petitioner seeks to add priority claims (4), (5), and (6) by amendment.

Application No. 10/393,150 issued as Patent No. 6,773,136. A review of the patent indicates the patent does not include priority claims (4), (5), or (6) listed above. A copy of the first page of the patent is enclosed.

Application No. 09/796,394 issued as Patent No. 6,572,240. A review of the patent indicates the patent does not include priority claim (6) listed above. As a courtesy, the Office notes the patent incorrectly lists the application number for Application No. 09/113,980, as 09/118,980. Petitioner may wish to obtain a certificate of correction. A copy of the first page of the patent is enclosed.

Application No. 09/514,089 issued as Patent No. 6,196,697. A review of the patent indicates the patent does not include priority claims (5) or (6) listed above. As a courtesy, the Office notes the patent incorrectly lists the application number for Application No. 09/113,980, as 09/118,980. Petitioner may wish to obtain a certificate of correction. A copy of the first page of the patent is enclosed.

Application No. 09/113,980 issued as Patent No. 6,033,083. A review of the patent indicates the patent does not include any priority claims. In other words, the patent does not include priority claims (5) and (6) listed above. A copy of the first page of the patent is enclosed.

Application No. 08/687,809 issued as Patent No. 5,779,349. A review of the patent indicates the patent does not include any priority claims. In other words, the patent does not include priority claim (6) listed above.

Discussion

A proper benefit claim to a chain of prior applications must include proper references to each prior application in order to establish copendency throughout the entire chain of prior applications. Appropriate references must have been made in each intermediate application in the chain of prior applications. *See* MPEP 201.11. In other words, it is not sufficient to simply include specific references as to all prior applications. All references must be proper. A benefit claim to a chain of prior applications will only be effective if each prior application actually includes a proper benefit claim. *See also Claiming the Benefit of a Prior-Filed Application under 35 U.S.C. 119(e), 120, 121, and 365(c)*, 1268 OG 89 (March 18, 2003).

The following example is set forth in MPEP 201.11:

> If an applicant desires, for example, the following benefit claim: "this application is a continuation of Application No. C, filed ---, which is a continuation of Application No. B, filed ---, which claims the benefit of provisional Application No. A, filed ---," then Application No. C must have a reference to Application No. B and provisional Application No. A, and Application No. B must have a reference to provisional Application No. A.

The intermediate applications in this case do not contain the appropriate references. Therefore, the petition cannot be granted.

Petitioner's Current Options

Petitioner may take no further action and continue to prosecute the application with the current priority claims.

In the alternative, petitioner may choose to take the steps necessary to enable petitioner to have the priority claim already filed in this case entered. Such steps should include:

(A) Filing a petition under 37 CFR 1.78(a)(3) in Application No. 10/393,150 (Patent No. 6,773,136) to add priority claims (4), (5), and (6) to that application;

(B) Filing a Certificate of Correction in Patent No. 6,773,136 in order to:
  - (i) Add language to the patent indicating Application No. 09/514,089 is a continuation-in-part of Application No. 09/113,980;
  - (ii) Add language indicating Application No. 09/113,980 is a continuation-in-part of Application No. 08/687,809; and
  - (iii) Add language indicating Application No. 08/687,809 is a continuation-in-part of Application Nos. 08/002,014, 08/058,356, and 08/464,736;

(C) Filing a Certificate of Correction in Patent No. 6,572,240 in order to:
  - (i) Correct the typographical error noted earlier in this decision; and
  - (ii) Add language indicating Application No. 08/687,809 is a continuation-in-part of Application Nos. 08/002,014, 08/058,356, and 08/464,736;

(D) Filing a Certificate of Correction in Patent No. 6,196,697 in order to:
  - (i) Correct the typographical error noted earlier in this decision;
  - (ii) Add language indicating Application No. 09/113,980 is a continuation-in-part of Application No. 08/687,809; and
  - (iii) Add language indicating Application No. 08/687,809 is a continuation-in-part of Application Nos. 08/002,014, 08/058,356, and 08/464,736;

(E) Filing a Certificate of Correction in Patent No. 6,033,083 in order to:
  - (i) Add language indicating the application/patent is a continuation-in-part of Application No. 08/687,809; and

(ii) Add language indicating Application No. 08/687,809 is a continuation-in-part of Application Nos. 08/002,014, 08/058,356, and 08/464,736;

(F) Filing a Certificate of Correction in Patent No. 5,779,349 in order to add language indicating the application/patent is continuation-in-part of Application Nos. 08/002,014, 08/058,356, and 08/464,736;

(G) Filing a request for reconsideration in the instant case that includes a statement that steps (A)-(F) set forth above have been taken.

Further correspondence with respect to this matter should be addressed as follows:

By mail: Mail Stop Petition
Commissioner for Patents
P.O. Box 1450
Alexandria, VA 22313-1450

By facsimile: (571) 273-8300
Attn: Office of Petitions

By hand: U.S. Patent and Trademark Office
Customer Service Window
Randolph Building
401 Dulany Street
Alexandria, VA 22314

Telephone inquiries regarding this communication should be directed to Petitions Attorney Steven Brantley at (571) 272-3203.

Charles Steven Brantley
Senior Petitions Attorney
Office of Petitions

US006773136B2

(12) **United States Patent**
Reinert, Sr.

(10) **Patent No.: US 6,773,136 B2**
(45) **Date of Patent: *Aug. 10, 2004**

(54) **STAINLESS STEEL AIRPORT LIGHT CANNISTER APPARATUS AND METHOD**

(76) Inventor: **Gary L. Reinert, Sr.**, 639 North Ave., Pittsburgh, PA (US) 15209

(*) Notice: Subject to any disclaimer, the term of this patent is extended or adjusted under 35 U.S.C. 154(b) by 0 days.

This patent is subject to a terminal disclaimer.

(21) Appl. No.: **10/393,150**

(22) Filed: **Mar. 20, 2003**

(65) **Prior Publication Data**

US 2003/0179571 A1 Sep. 25, 2003

Related U.S. Application Data

(60) Division of application No. 09/796,394, filed on Mar. 1, 2001, now Pat. No. 6,572,240, which is a continuation-in-part of application No. 09/514,089, filed on Feb. 28, 2000, now Pat. No. 6,196,697.

(51) **Int. Cl.**[7] **F01F 9/09**

(52) **U.S. Cl.** **362/153**; 362/145; 362/267

(58) **Field of Search** 362/153, 153.1, 362/145, 267, 285–287, 362–366, 418, 417; 174/37, 48

(56) **References Cited**

U.S. PATENT DOCUMENTS

3,736,417 A	*	5/1973	Williams	362/430
4,953,067 A	*	8/1990	Moore	362/431
5,779,349 A	*	7/1998	Reinert, Sr.	362/153.1
6,196,697 B1	*	3/2001	Reinert, Sr.	362/153.1

* cited by examiner

Primary Examiner—Mohammad Sikder
(74) *Attorney, Agent, or Firm*—Douglas G. Glantz

(57) **ABSTRACT**

An airport inset light adjustable alignment container set provides a light fixture and stainless steel support for airport runway, taxiway, or other aircraft ground traffic areas. A variable length extension means rotatably adjusts height and azimuth by a rotatable vertical displacement. In one aspect, a previously installed, airport inset light and stainless steel base of the present invention receives a variable length extension assembly for rotatably adjusting the height and azimuth alignment of an airport inset light. Rotation locking means are provided for securing the rotatable adjustment apparatus from further rotation. A novel stainless steel base is adapted to receive various different designs of inset lights and, in one aspect, to provide a stainless steel protection ring "mud dam."

4 Claims, 8 Drawing Sheets

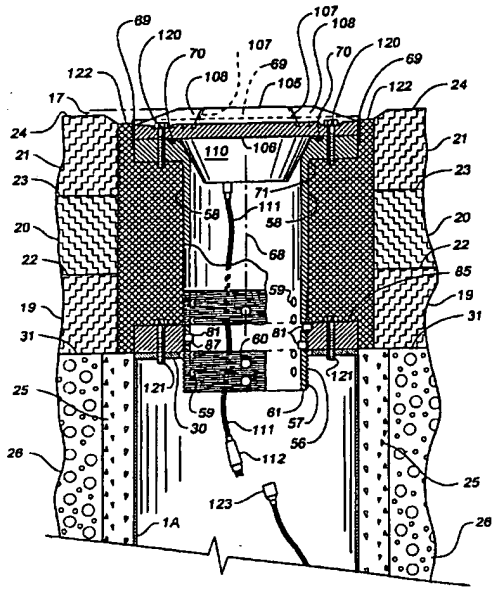

US006572240B2

(12) **United States Patent**
Reinert, Sr.

(10) **Patent No.: US 6,572,240 B2**
(45) **Date of Patent: *Jun. 3, 2003**

(54) **STAINLESS STEEL AIRPORT LIGHT CANNISTER APPARATUS AND METHOD**

(76) Inventor: **Gary L. Reinert, Sr.**, 639 North Ave., Pittsburgh, PA (US) 15209

(*) Notice: Subject to any disclaimer, the term of this patent is extended or adjusted under 35 U.S.C. 154(b) by 0 days.

This patent is subject to a terminal disclaimer.

(21) Appl. No.: **09/796,394**

(22) Filed: **Mar. 1, 2001**

(65) **Prior Publication Data**

US 2001/0017775 A1 Aug. 30, 2001

Related U.S. Application Data

(63) Continuation-in-part of application No. 09/514,089, filed on Feb. 28, 2000, now Pat. No. 6,196,697, which is a continuation-in-part of application No. 09/118,980, filed on Jul. 10, 1998, now Pat. No. 6,033,083, which is a continuation-in-part of application No. 08/687,809, filed on Jul. 26, 1996, now Pat. No. 5,779,349.

(51) **Int. Cl.**[7] **E01F 9/00**

(52) **U.S. Cl.** **362/153**; 362/153.1; 362/145; 362/285

(58) **Field of Search** 362/153, 153.1, 362/145, 285, 366, 418; 174/37, 48

(56) **References Cited**

U.S. PATENT DOCUMENTS

3,736,417 A	*	5/1973	Williams	240/78 R
4,953,067 A	*	8/1990	Moore	362/431
5,779,349 A	*	7/1998	Reinert, Sr.	362/153.1

* cited by examiner

Primary Examiner—Mohammad Sikder
(74) *Attorney, Agent, or Firm*—Douglas G. Glantz

(57) **ABSTRACT**

An airport inset light adjustable alignment container set provides a light fixture and stainless steel support for airport runway, taxiway, or other aircraft ground traffic areas. A variable length extension means rotatably adjusts height and azimuth by a rotatable vertical displacement. In one aspect, a previously installed, airport inset light and stainless steel base of the present invention receives a variable length extension assembly for rotatably adjusting the height and azimuth alignment of an airport inset light. Rotation locking means are provided for securing the rotatable adjustment apparatus from further rotation. A novel stainless steel base is adapted to receive various different designs of inset lights and, in one aspect, to provide a stainless steel protection ring "mud dam."

16 Claims, 8 Drawing Sheets

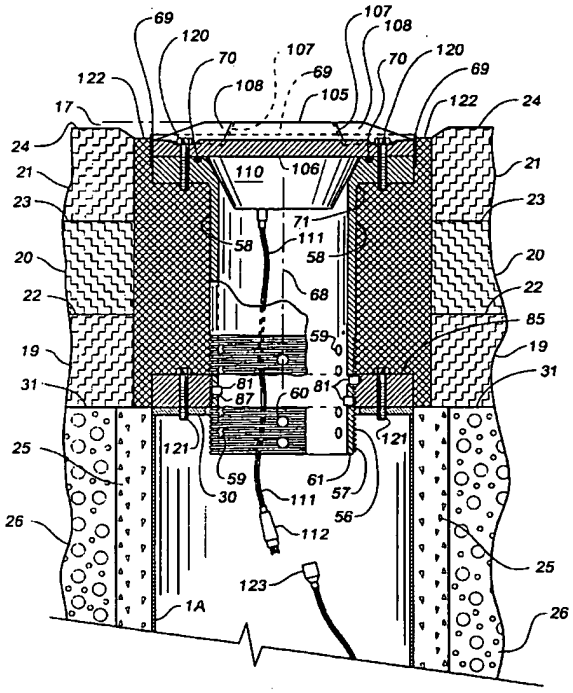

US006196697B1

(12) **United States Patent**
Reinert, Sr.

(10) **Patent No.: US 6,196,697 B1**
(45) **Date of Patent: *Mar. 6, 2001**

(54) **STAINLESS STEEL AIRPORT LIGHT SUPPORT APPARATUS AND METHOD**

(76) Inventor: **Gary L. Reinert, Sr.**, 639 North Ave., Pittsburgh, PA (US) 15209

(*) Notice: Subject to any disclaimer, the term of this patent is extended or adjusted under 35 U.S.C. 154(b) by 0 days.

This patent is subject to a terminal disclaimer.

(21) Appl. No.: **09/514,089**

(22) Filed: **Feb. 28, 2000**

Related U.S. Application Data

(63) Continuation-in-part of application No. 09/118,980, filed on Jul. 10, 1998, now Pat. No. 6,033,083.

(51) **Int. Cl.**[7] **E01F 9/09**

(52) **U.S. Cl.** **362/153.1**; 362/145; 362/153; 362/285; 362/366; 362/418

(58) **Field of Search** 362/153.1, 153, 362/145, 285, 366, 418; 174/37, 48

(56) **References Cited**

U.S. PATENT DOCUMENTS

4,931,914 * 6/1990 Qiogue 362/265
5,003,441 * 3/1991 Rowe et al. 362/183
5,147,980 * 9/1992 Ferguson, Jr. 174/37
5,156,454 * 10/1992 White 362/153

* cited by examiner

Primary Examiner—Mohammad Y. Sikder
(74) *Attorney, Agent, or Firm*—Douglas G. Glantz

(57) **ABSTRACT**

A non-corrosive airport inset light adjustable alignment container set provides a light fixture and support for airport runway, taxiway, or other aircraft ground traffic areas, variable length extension means for rotatably adjusting height and azimuth by a vertical displacement, and stainless steel mounting means on the adjustable fixture extension for mounting the airport inset light on the rotatably adjustable fixture extension. For previously installed, old airport inset lights, a variable length extension assembly of the present invention can be connected to a fixed connecting flange for rotatably adjusting the height and azimuth alignment of a conventional, prior art airport inset light, e.g., one which has been previously installed without the benefit of the present invention. Rotation locking means are provided for securing the rotatable adjustment apparatus from further rotation. A novel top flange is adapted to receive various different designs of inset lights and to provide a stainless steel protection ring "mud dam."

20 Claims, 8 Drawing Sheets

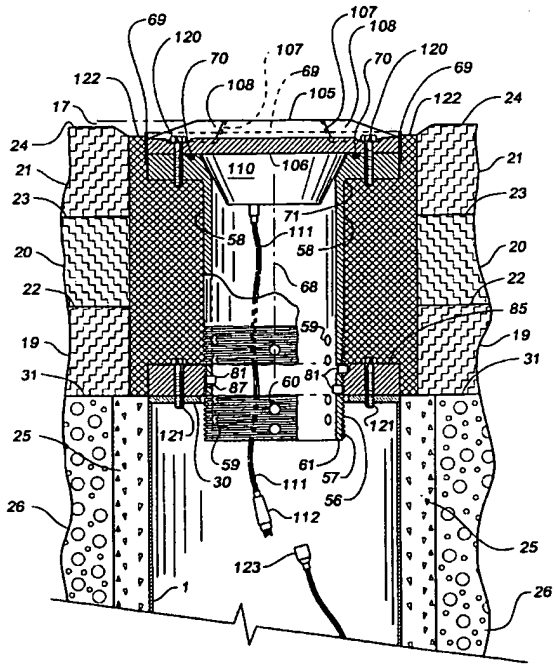

US006033083A

United States Patent [19]

Reinert, Sr.

[11] Patent Number: 6,033,083

[45] Date of Patent: *Mar. 7, 2000

[54] AIRPORT RUNWAY LIGHT SUPPORT APPARATUS AND METHOD

[76] Inventor: Gary L. Reinert, Sr., 639 North Ave., Pittsburgh, Pa. 15209

[*] Notice: This patent is subject to a terminal disclaimer.

[21] Appl. No.: 09/113,980

[22] Filed: Jul. 10, 1998

Related U.S. Application Data

[63] Continuation-in-part of application No. 08/687,809, Jul. 26, 1996, Pat. No. 5,779,349.

[51] Int. Cl.[7] F21V 19/02

[52] U.S. Cl. 362/153.1; 362/145; 362/153; 362/285; 362/366; 362/418

[58] Field of Search 362/145, 153, 362/153.1, 285, 366, 418; 174/37, 48

[56] References Cited

U.S. PATENT DOCUMENTS

4,931,914	6/1990	Qiogue	362/265
5,003,441	3/1991	Rowe et al.	362/183
5,147,980	9/1992	Ferguson, Jr.	174/37
5,156,454	10/1992	White	362/153

Primary Examiner—Cassandra Spyrou
Assistant Examiner—Mohammad Y. Sikder
Attorney, Agent, or Firm—Douglas G. Glantz

[57] ABSTRACT

A non-corrosive airport inset light adjustable alignment container set provides a light fixture and support for airport runway, taxiway, or other aircraft ground traffic areas, variable length extension means for rotatably adjusting height and azimuth by a vertical displacement, and non-corrosive mounting means on the adjustable fixture extension for mounting the airport inset light on the rotatably adjustable fixture extension. For previously installed, old airport inset lights, a variable length extension assembly of the present invention can be connected to a fixed connecting flange for rotatably adjusting the height and azimuth alignment of a conventional, prior art airport inset light, e.g., one which has been previously installed without the benefit of the present invention. Rotation locking means are provided for securing the rotatable adjustment apparatus from further rotation. A novel top flange is adapted to receive various different designs of inset lights and to provide a protection ring "mud dam." In one aspect, the non-corrosive mounting means is composed of stainless steel.

18 Claims, 8 Drawing Sheets

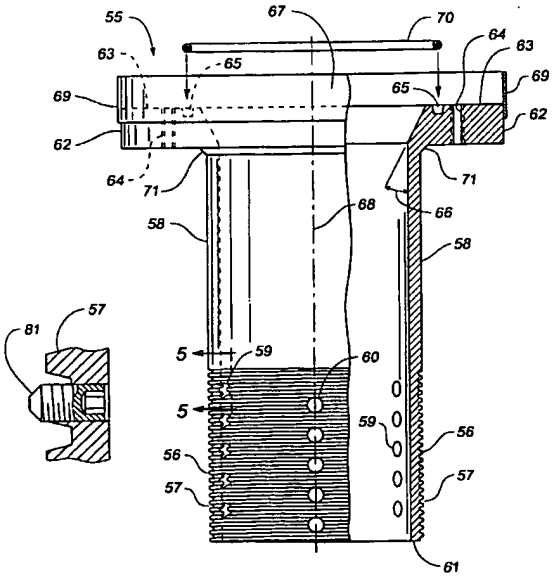

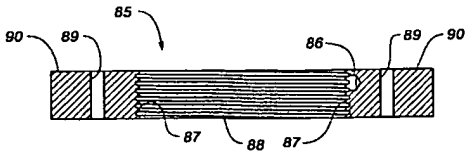

US005779349A

United States Patent [19]

Reinert, Sr.

[11] Patent Number: 5,779,349

[45] Date of Patent: Jul. 14, 1998

[54] **ADJUSTABLE AIRPORT RUNWAY APPARATUS AND METHOD**

[76] Inventor: Gary L. Reinert, Sr., 4319 Middle Rd., Allison Park, Pa. 15101

[21] Appl. No.: 687,809

[22] Filed: Jul. 26, 1996

Related U.S. Application Data

[63] Continuation-in-part of Ser. No. 2,014, Jan. 8, 1993, Pat. No. 5,541,362, Ser. No. 58,356, May 10, 1993, Pat. No. 5,594,201, and Ser. No. 464,736, Jun. 29, 1995, Pat. No. 5,431,510.

[51] Int. Cl.[6] E01F 9/00

[52] U.S. Cl. 362/153.1; 362/153; 362/285; 362/366; 362/418

[58] Field of Search 362/145, 153, 362/153.1, 285, 366, 418; 174/37, 48

[56] **References Cited**

U.S. PATENT DOCUMENTS

3,376,413	4/1968	Peters	362/145
4,180,850	12/1979	Bivens	362/285
4,234,916	11/1980	Goralnik	362/294
4,382,274	5/1983	De Backer et al.	362/153
4,617,616	10/1986	Juell et al.	362/267
4,622,435	11/1986	Trainor et al.	174/57
4,914,544	4/1990	Dahlberg	362/153.1
4,924,364	5/1990	Pannier	362/153.1
4,931,914	6/1990	Quiogue	362/153.1
4,984,139	1/1991	Goggia	362/153.1
5,003,441	3/1991	Crowe et al.	362/183
5,147,980	9/1992	Ferguson, Jr.	174/37
5,156,454	10/1992	White	362/153
5,335,151	8/1994	Dahlberg	362/153.1
5,414,603	5/1995	Conway	362/153.1
5,450,300	9/1995	Rector, Jr.	362/153.1

Primary Examiner—Ira S. Lazarus
Assistant Examiner—Nhat-Hang H. Lam
Attorney, Agent, or Firm—Douglas G. Glantz

[57] **ABSTRACT**

An airport inset light adjustable alignment container set provides a light fixture and support for airport runway, taxiway, or other aircraft ground traffic areas and variable length extension means for rotatably adjusting height by a vertical displacement range of up to six inches (15 cm) or more. For previously installed, old airport inset lights, a variable length extension assembly of the present invention can be connected to a fixed connecting flange for rotatably adjusting the height and azimuth alignment of a conventional, prior art airport inset light, e.g., one which has been previously installed without the benefit of the present invention. A novel top flange is adapted to receive various different designs of inset lights and to provide a protection ring "mud dam." Rotation locking means are provided for securing the rotatable adjustment apparatus from further rotation.

20 Claims, 7 Drawing Sheets

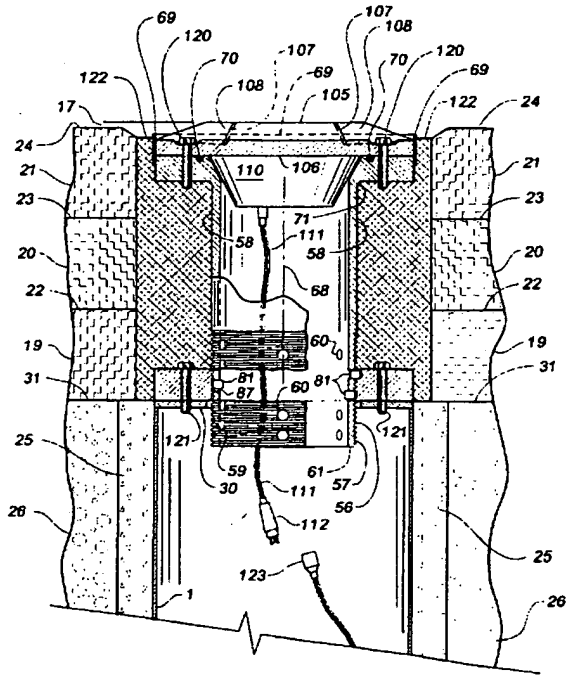

UNITED STATES PATENT AND TRADEMARK OFFICE

Commissioner for Patents
United States Patent and Trademark Office
P.O. Box 1450
Alexandria, VA 22313-1450
www.uspto.gov

082007

MAILED FROM DIRECTORS OFFICE
AUG - 8 2007
TECHNOLOGY CENTER 2800

DOUGLAS G GLANTZ
ATTORNEY AT LAW
5260 DEBORAH COURT
DOYLESTOWN PA 18902-1949

In re Application of:	:	
Gary L. Reinert	:	DECISION *SUA SPONTE*
Serial No.: 10/896,417	:	WITHDRAWING HOLDING
Filed: July 22, 2004	:	OF ABANDONMENT
Attorney Docket No.: 563GLR	:	

This is a decision, *sua sponte*, withdrawing the holding of abandonment of the above-identified application.

A decision on appeal by the Board of Patent Appeals and Interferences (BPAI) was mailed on July 17, 2007, affirming the final rejections by the examiner of all pending claims in the application. A Notice of Abandonment was mailed on July 25, 2007.

Although no petition or request to withdraw the holding of abandonment in this application has been filed, the Notice of Abandonment is hereby vacated, the holding of abandonment withdrawn and the application restored to pending and under appeal status in view of the fact that the appellant has two months from the date of the BPAI decision to seek review of the decision by the court or to commence a civil action.

Any inquiry regarding this decision should be directed to Stephone B. Allen, Supervisory Patent Examiner, at (571) 272-2434.

Janice A. Falcone, Group Director
Technology Center 2800
Semiconductors, Electrical and Optical
Systems and Components

UNITED STATES PATENT AND TRADEMARK OFFICE

Commissioner for Patents
United States Patent and Trademark Office
P.O. Box 1450
Alexandria, VA 22313-1450
www.uspto.gov

THE WEBB LAW FIRM, P.C.
700 KOPPERS BUILDING
436 SEVENTH AVENUE
PITTSBURGH, PA 15219

COPY MAILED

FEB 0 1 2008

OFFICE OF PETITIONS

In re Application of
REINERT, Gary L. Sr.
Application No. 10/896,417
Filed: July 22, 2004
Attorney Docket No. **5433-072223**

: DECISION ON PETITION
: UNDER 37 CFR 1.78(a)(3)

This is a decision on the petition under 37 CFR 1.78(a)(6), filed September 19, 2007, to accept an unintentionally delayed claim under 35 U.S.C. § 120 for the benefit of priority to a prior-filed nonprovisional applications, set forth in the amendment filed with this petition.

The petition is **DISMISSED.**

A petition for acceptance of a claim for late priority under 37 CFR 1.78(a)(3) is only applicable to those applications filed on or after November 29, 2000. Further, the petition is appropriate only after expiration of the period specified in 37 CFR 1.78(a)(2)(ii). In addition, the petition under 37 CFR 1.78(a)(3) must be accompanied by:

(1) the reference required by 35 U.S.C. § 120 and 37 CFR 1.78(a)(2)(i) to the prior-filed application, unless previously submitted;
(2) the surcharge set forth in § 1.17(t); and
(3) a statement that the entire delay between the date the claim was due under 37 CFR 1.78(a)(2)(ii) and the date the claim was filed was unintentional. The Director may require additional information where there is a question whether the delay was unintentional.

The petition does not satisfy item (1) above.

The reference to add the above noted, prior-filed applications in the first sentence of the specification on page one following the title is not acceptable as drafted since it improperly incorporates by reference the prior-filed applications. An incorporation by reference statement added after an application's filing date is not effective because no new matter can be added to an application after its filing date (see 35 U.S.C. § 132(a)). If an incorporation by reference statement is included in an amendment to the specification to add a benefit claim under 35 U.S.C. § 120 after the filing date of the application, the amendment would not be proper. When a benefit

claim under 35 U.S.C. § 120 is submitted after the filing of an application, the reference to the prior application cannot include an incorporation by reference statement of the prior application. See Dart Industries v. Banner, 636 F.2d 684, 207 USPQ 273 (C.A.D.C. 1980). Note MPEP §§ 201.06(c) and 608.04(b).

If reconsideration of this decision is desired, a renewed petition under 37 CFR 1.78(a)(3) and an Application Data Sheet or an amendment (complying with 37 CFR 1.121 and 37 CFR 1.76(b)(5)) to correct the above matters are required.

Further correspondence with respect to this matter should be addressed as follows:

By mail: Mail Stop PETITIONS
Commissioner for Patents
Post Office Box 1450
Alexandria, VA 22313-1450

By hand: Customer Service Window
Mail Stop Petitions
Randolph Building
401 Dulany Street
Alexandria, VA 22314

By fax: (571) 273-8300
ATTN: Office of Petitions

Any questions concerning this matter may be directed to Monica A. Graves at (571) 272-7253.

Sherry D. Brinkley
Petitions Examiner
Office of Petitions

UNITED STATES PATENT AND TRADEMARK OFFICE

Commissioner for Patents
United States Patent and Trademark Office
P.O. Box 1450
Alexandria, VA 22313-1450
www.uspto.gov

THE WEBB LAW FIRM, PC
700 KOPPERS BUILDING
436 SEVENTH AVENUE
PITTSBURGH, PA 15219

COPY MAILED

JUN 20 2008

OFFICE OF PETITIONS

In re Application of :
REINERT, Gary L. Sr. :
Application No. 10/896,417 :
Filed: July 22, 2004 :
Attorney Docket No. **5433-072223** :

DECISION ON PETITION
UNDER 37 CFR 1.78(a)(3)

This is a decision on the renewed petition under 37 CFR 1.78(a)(3), filed March 4, 2008, to accept an unintentionally delayed claim under 35 U.S.C. § 120 for the benefit of priority to the prior-filed nonprovisional applications set forth in the amendment filed with the petition.

The petition is **GRANTED.**

A petition for acceptance of a claim for late priority under 37 CFR 1.78(a)(3) is only applicable to those applications filed on or after November 29, 2000. Further, the petition is appropriate only after the expiration of the period specified in 37 CFR 1.78(a)(2)(ii). In addition, the petition under 37 CFR 1.78(a)(3) must be accompanied by:

(1) the reference required by 35 U.S.C. § 120 and 37 CFR 1.78(a)(2)(i) of the prior-filed application, unless previously submitted;
(2) the surcharge set forth in § 1.17(t); and
(3) a statement that the entire delay between the date the claim was due under 37 CFR 1.78(a)(2)(ii) and the date the claim was filed was unintentional. The Director may require additional information where there is a question whether the delay was unintentional.

All of the above requirements having been satisfied, the late claim for priority under 35 U.S.C. § 120 is accepted as being unintentionally delayed.

The granting of the petition to accept the delayed benefit claim to the prior-filed applications under 37 CFR 1.78(a)(3) should not be construed as meaning that this

application is entitled to the benefit of the prior-filed applications. In order for this application to be entitled to the benefit of the prior-filed applications, all other requirements under 35 U.S.C. § 120 and 37 CFR 1.78(a)(1) and (a)(2) must be met. Similarly, the fact that the corrected Filing Receipt accompanying this decision on petition includes the prior-filed applications should not be construed as meaning that applicant is entitled to the claim for benefit of priority to the prior-filed applications noted thereon. Accordingly, the examiner will, in due course, consider this benefit claim and determine whether the application is entitled to the benefit of the earlier filing date.

A corrected Filing Receipt, which includes the priority claim to the prior-filed nonprovisional applications, accompanies this decision on petition.

Any inquiries concerning this decision may be directed to Monica A. Graves at (571) 272-7253. All other inquiries concerning either the examination procedures or status of the application should be directed to the Technology Center at (571) 272-2800.

This application is being forwarded to Technology Center Art Unit 2872 for consideration by the examiner of applicant's entitlement to claim benefit of priority under 35 U.S.C. § 120 to the prior-filed applications.

Sherry D. Brinkley
Petitions Examiner
Office of Petitions

ATTACHMENT: Corrected Filing Receipt

UNITED STATES PATENT AND TRADEMARK OFFICE

UNITED STATES DEPARTMENT OF COMMERCE
United States Patent and Trademark Office
Address: COMMISSIONER FOR PATENTS
P.O. Box 1450
Alexandria, Virginia 22313-1450
www.uspto.gov

APPLICATION NUMBER	FILING or 371(c) DATE	GRP ART UNIT	FIL FEE REC'D	ATTY.DOCKET.NO	TOT CLAIMS	IND CLAIMS
10/896,417	07/22/2004	2872	385	5433-072223	6	1

CONFIRMATION NO. 9592

CORRECTED FILING RECEIPT

28289
THE WEBB LAW FIRM, P.C.
700 KOPPERS BUILDING
436 SEVENTH AVENUE
PITTSBURGH, PA 15219

OC000000030592964

Date Mailed: 06/20/2008

Receipt is acknowledged of this non-provisional patent application. The application will be taken up for examination in due course. Applicant will be notified as to the results of the examination. Any correspondence concerning the application must include the following identification information: the U.S. APPLICATION NUMBER, FILING DATE, NAME OF APPLICANT, and TITLE OF INVENTION. Fees transmitted by check or draft are subject to collection. Please verify the accuracy of the data presented on this receipt. **If an error is noted on this Filing Receipt, please submit a written request for a Filing Receipt Correction. Please provide a copy of this Filing Receipt with the changes noted thereon. If you received a "Notice to File Missing Parts" for this application, please submit any corrections to this Filing Receipt with your reply to the Notice. When the USPTO processes the reply to the Notice, the USPTO will generate another Filing Receipt incorporating the requested corrections**

Applicant(s)

Gary L. Reinert SR., Pittsburgh, PA;

Power of Attorney: The patent practitioners associated with Customer Number 28289

Domestic Priority data as claimed by applicant

This application is a DIV of 10/393,150 03/20/2003 PAT 6,773,136
which is a DIV of 09/796,394 03/01/2001 PAT 6,572,240
which is a CIP of 09/514,089 02/28/2000 PAT 6,196,697
which is a CIP of 09/113,980 07/10/1998 PAT 6,033,083
which is a CIP of 08/687,809 07/26/1996 PAT 5,779,349
which is a CIP of 08/002,014 01/08/1993 PAT 5,541,362
and is a CIP of 08/464,736 06/29/1995 PAT 5,785,409
and is a CIP of 08/058,356 05/10/1993 PAT 5,594,201

Foreign Applications

If Required, Foreign Filing License Granted: 09/13/2004

The country code and number of your priority application, to be used for filing abroad under the Paris Convention, is **US 10/896,417**

Projected Publication Date: Not Applicable

Non-Publication Request: No

Early Publication Request: No
**** SMALL ENTITY ****

Title

Stainless steel airport light cannister apparatus and method

Preliminary Class

362

PROTECTING YOUR INVENTION OUTSIDE THE UNITED STATES

Since the rights granted by a U.S. patent extend only throughout the territory of the United States and have no effect in a foreign country, an inventor who wishes patent protection in another country must apply for a patent in a specific country or in regional patent offices. Applicants may wish to consider the filing of an international application under the Patent Cooperation Treaty (PCT). An international (PCT) application generally has the same effect as a regular national patent application in each PCT-member country. The PCT process **simplifies** the filing of patent applications on the same invention in member countries, but **does not result** in a grant of "an international patent" and does not eliminate the need of applicants to file additional documents and fees in countries where patent protection is desired.

Almost every country has its own patent law, and a person desiring a patent in a particular country must make an application for patent in that country in accordance with its particular laws. Since the laws of many countries differ in various respects from the patent law of the United States, applicants are advised to seek guidance from specific foreign countries to ensure that patent rights are not lost prematurely.

Applicants also are advised that in the case of inventions made in the United States, the Director of the USPTO must issue a license before applicants can apply for a patent in a foreign country. The filing of a U.S. patent application serves as a request for a foreign filing license. The application's filing receipt contains further information and guidance as to the status of applicant's license for foreign filing.

Applicants may wish to consult the USPTO booklet, "General Information Concerning Patents" (specifically, the section entitled "Treaties and Foreign Patents") for more information on timeframes and deadlines for filing foreign patent applications. The guide is available either by contacting the USPTO Contact Center at 800-786-9199, or it can be viewed on the USPTO website at http://www.uspto.gov/web/offices/pac/doc/general/index.html.

For information on preventing theft of your intellectual property (patents, trademarks and copyrights), you may wish to consult the U.S. Government website, http://www.stopfakes.gov. Part of a Department of Commerce initiative, this website includes self-help "toolkits" giving innovators guidance on how to protect intellectual property in specific countries such as China, Korea and Mexico. For questions regarding patent enforcement issues, applicants may call the U.S. Government hotline at 1-866-999-HALT (1-866-999-4158).

LICENSE FOR FOREIGN FILING UNDER

Title 35, United States Code, Section 184

Title 37, Code of Federal Regulations, 5.11 & 5.15

GRANTED

The applicant has been granted a license under 35 U.S.C. 184, if the phrase "IF REQUIRED, FOREIGN FILING LICENSE GRANTED" followed by a date appears on this form. Such licenses are issued in all applications where the conditions for issuance of a license have been met, regardless of whether or not a license may be required as

set forth in 37 CFR 5.15. The scope and limitations of this license are set forth in 37 CFR 5.15(a) unless an earlier license has been issued under 37 CFR 5.15(b). The license is subject to revocation upon written notification. The date indicated is the effective date of the license, unless an earlier license of similar scope has been granted under 37 CFR 5.13 or 5.14.

This license is to be retained by the licensee and may be used at any time on or after the effective date thereof unless it is revoked. This license is automatically transferred to any related applications(s) filed under 37 CFR 1.53(d). This license is not retroactive.

The grant of a license does not in any way lessen the responsibility of a licensee for the security of the subject matter as imposed by any Government contract or the provisions of existing laws relating to espionage and the national security or the export of technical data. Licensees should apprise themselves of current regulations especially with respect to certain countries, of other agencies, particularly the Office of Defense Trade Controls, Department of State (with respect to Arms, Munitions and Implements of War (22 CFR 121-128)); the Bureau of Industry and Security, Department of Commerce (15 CFR parts 730-774); the Office of Foreign AssetsControl, Department of Treasury (31 CFR Parts 500+) and the Department of Energy.

NOT GRANTED

No license under 35 U.S.C. 184 has been granted at this time, if the phrase "IF REQUIRED, FOREIGN FILING LICENSE GRANTED" DOES NOT appear on this form. Applicant may still petition for a license under 37 CFR 5.12, if a license is desired before the expiration of 6 months from the filing date of the application. If 6 months has lapsed from the filing date of this application and the licensee has not received any indication of a secrecy order under 35 U.S.C. 181, the licensee may foreign file the application pursuant to 37 CFR 5.15(b).

UNITED STATES PATENT AND TRADEMARK OFFICE

UNITED STATES DEPARTMENT OF COMMERCE
United States Patent and Trademark Office
Address: COMMISSIONER FOR PATENTS
P.O. Box 1450
Alexandria, Virginia 22313-1450
www.uspto.gov

THE WEBB LAW FIRM, P.C.
700 KOPPERS BUILDING
436 SEVENTH AVENUE
PITTSBURGH, PA 15219

Mail Date: 04/21/2010

Applicant	: Gary L. Reinert SR.	: DECISION ON REQUEST FOR
Patent Number	: 7588344	: RECALCULATION of PATENT
Issue Date	: 09/15/2009	: TERM ADJUSTMENT IN VIEW
Appliction No	: 10/896,417	: OF WYETH AND NOTICE OF INTENT TO
Filed	: 07/22/2004	: ISSUE CERTIFICATE OF CORRECTION
		:

The Request for Recalculation is **GRANTED** to the extent indicated.

The patent term adjustment has been determined to be **60** days. The USPTO will *sua sponte* issue a certificate of correction reflecting the amount of PTA days determined by the recalculation.

Prior to the issuance of the certificate of correction, the USPTO will afford patentee an opportunity to be heard and request reconsideration. Accordingly, patentee has **one month or thirty (30) days**, whichever is longer, to file a request for reconsideration of this patent term adjustment calculation. See 35 U.S.C. 154(b)(3)(B)(ii) and 37 CFR 1.322(a)(4). No extensions of time will be granted under 37 CFR 1.136.

Patentee should use document code PET.OP if electronically filing a request for reconsideration of this patent term adjustment calculation. The patentee must also include the information required by 37 CFR 1.705(b)(2) and the fee required by 37 CFR 1.18(e). If patentee does not file a timely request for reconsideration of this patent term adjustment calculation including the information required by 37 CFR 1.705(b)(2) and the fee required by 37 CFR 1.18(e), the USPTO will issue a certificate of correction reflecting the PTA determination noted above.

Patentee should be aware that in order to preserve the right to review in the United States District Court for the District of Columbia of the USPTO patent term adjustment determination, patentee must ensure that he or she also take the steps required under 35 U.S.C. 154(b)(4)(A) in a timely manner. Nothing in the request for recalculation should be construed as providing an alternative time frame for commencing a civil action under 35 U.S.C. 154(b)(4)(A).

Any questions concerning this decision should be directed to the Office of Patent Legal Administration at 571-272-7702.

UNITED STATES PATENT AND TRADEMARK OFFICE

UNITED STATES DEPARTMENT OF COMMERCE
United States Patent and Trademark Office
Address: COMMISSIONER FOR PATENTS
P.O. Box 1450
Alexandria, Virginia 22313-1450
www.uspto.gov

WOLF GREENFIELD & SACKS, P.C.
600 ATLANTIC AVENUE
BOSTON, MA 02210-2206

Mail Date: 04/21/2010

Applicant	: David E. Reich	: DECISION ON REQUEST FOR
Patent Number	: 7640159	: RECALCULATION of PATENT
Issue Date	: 12/29/2009	: TERM ADJUSTMENT IN VIEW
Appliction No	: 10/896,426	: OF WYETH AND NOTICE OF INTENT TO
Filed	: 07/22/2004	: ISSUE CERTIFICATE OF CORRECTION
		:

The Request for Recalculation is **GRANTED** to the extent indicated.

The patent term adjustment has been determined to be **986** days. The USPTO will *sua sponte* issue a certificate of correction reflecting the amount of PTA days determined by the recalculation.

Prior to the issuance of the certificate of correction, the USPTO will afford patentee an opportunity to be heard and request reconsideration. Accordingly, patentee has **one month or thirty (30) days**, whichever is longer, to file a request for reconsideration of this patent term adjustment calculation. See 35 U.S.C. 154(b)(3)(B)(ii) and 37 CFR 1.322(a)(4). No extensions of time will be granted under 37 CFR 1.136.

Patentee should use document code PET.OP if electronically filing a request for reconsideration of this patent term adjustment calculation. The patentee must also include the information required by 37 CFR 1.705(b)(2) and the fee required by 37 CFR 1.18(e). If patentee does not file a timely request for reconsideration of this patent term adjustment calculation including the information required by 37 CFR 1.705(b)(2) and the fee required by 37 CFR 1.18(e), the USPTO will issue a certificate of correction reflecting the PTA determination noted above.

Patentee should be aware that in order to preserve the right to review in the United States District Court for the District of Columbia of the USPTO patent term adjustment determination, patentee must ensure that he or she also take the steps required under 35 U.S.C. 154(b)(4)(A) in a timely manner. Nothing in the request for recalculation should be construed as providing an alternative time frame for commencing a civil action under 35 U.S.C. 154(b)(4)(A).

Any questions concerning this decision should be directed to the Office of Patent Legal Administration at 571-272-7702.

UNITED STATES PATENT AND TRADEMARK OFFICE

Commissioner for Patents
United States Patent and Trademark Office
P.O. Box 1450
Alexandria, VA 22313-1450
www.uspto.gov

SCHWEGMAN LUNDBERG WOESSNER & KLUTH PA
P O BOX 2938
MINNEAPOLIS, MN 55402

COPY MAILED
AUG 0 4 2006
OFFICE OF PETITIONS

In re Application of :
Pierre C. Fazan et al :
Application No. 10/896,442 : DECISION GRANTING PETITION
Filed: July 22, 2004 : UNDER 37 CFR 1.313(c)(2)
Attorney Docket No. 303.434US3 :

This is a decision on the petition, filed August 2, 2006, under 37 CFR 1.313(c)(2) to withdraw the above-identified application from issue after payment of the issue fee.

The petition is **GRANTED**.

The above-identified application is withdrawn from issue for consideration of a submission under 37 CFR 1.114 (request for continued examination). See 37 CFR 1.313(c)(2).

Petitioner is advised that the issue fee paid on May 2, 2006 in the above-identified application cannot be refunded. If, however, the above-identified application is again allowed, petitioner may request that it be applied towards the issue fee required by the new Notice of Allowance.[1]

Telephone inquiries should be directed to the undersigned at (571) 272-3218.

This matter is being referred to Technology Center AU 2811 for processing of the request for continued examination under 37 CFR 1.114 and for consideration of the Information Disclosure Statement.

Frances Hicks
Petitions Examiner
Office of Petitions

C:\Documents and Settings\FHicks\My Documents\470\Aug9\896442.wpd

---

[1] *The request to apply the issue fee to the new Notice may be satisfied by completing and returning the new Part B – Fee(s) Transmittal Form (along with any balance due at the time of submission), which includes the following language thereon: "The Director of the USPTO is requested to apply the Issue Fee and Publication Fee (if any) or to re-apply any previously paid issue fee in the application identified above. Petitioner is advised that, whether a fee is indicated as being due or not, the Issue Fee Transmittal Form must be completed and timely submitted to avoid abandonment. Note the language in bold text on the first page of the Notice of Allowance and Fee(s) Due (PTOL-85).*

SPE RESPONSE FOR CERTIFICATE OF CORRECTION

Paper No.:20060607

DATE : June 7, 2006

TO SPE OF : ART UNIT 1624

SUBJECT : Request for Certificate of Correction on Patent No.: 7,012,073

A response is requested with respect to the accompanying request for a certificate of correction.

Please complete this form and return with file, within **7** days to:
Certificates of Correction Branch - PK 3-910
Palm location **7590** - Tel. No. 305-8201

With respect to the change(s) requested, correcting Office and/or Applicant's errors, should the patent read as shown in the certificate of correction? No new matter should be introduced, nor should the scope or meaning of the claims be changed.

Thank You For Your Assistance **Certificates of Correction Branch**

The request for issuing the above-identified correction(s) is hereby:
Note your decision on the appropriate box.

☒ **Approved** **All** changes apply.

☐ **Approved in Part** Specify below which changes **do not** apply.

☐ **Denied** State the reasons for denial below.

Comments:

SPE: James Wilson **Art Unit** 1624

OIPE IAP43
MAY 22 2006
PATENT & TRADEMARK OFFICE

cofc

PATENT APPLICATION

IN THE UNITED STATES PATENT AND TRADEMARK OFFICE

In re Patent

Michael Klug et al.

Patent No. 7,012,073

Issued: March 14, 2006

Assigned to Hoffmann-La Roche Inc.

(Application No. 10/896,445, filed July 22, 2004)

For: **QUINOLINE DERIVATIVES**

Certificate
MAY 25 2006
of Correction

REQUEST FOR CERTIFICATE OF CORRECTION

Nutley, New Jersey 07110
May 19, 2006

Commissioner for patents
P.O. Box 1450
Alexandria, VA 22313-1450

Sir:

Attention is called to errors which appear in the (claims) specification of the above patent. These errors are set forth in the enclosed Certificate of Correction Form (PTO 1050). Request is hereby made for issuance of a Certificate of Correction.

The exact page and line numbers where the errors occur in the patent are as follows:

MAY 25 2006

U.S. Patent No. 7,012,073
Issued: March 14, 2006

Column 62, Claim 17, lines 48-58, delete

" 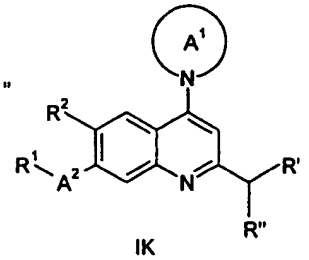 "

IK

and insert

– 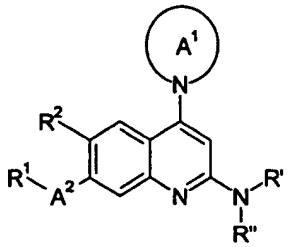 –

IK

Column 63, Claim 18, line 36, delete "aroup" and insert -- group --.

The errors which appear above are Office errors which fall into the category of mistakes which are correctable pursuant to 37 CFR 1.322.

Two copies of the Certificate of Correction Form (PTO 1050) are enclosed.

The Commissioner is hereby authorized to charge payment of any additional fees associated with this communication to Deposit Account No. 08-2525.

Respectfully submitted,

Attorney for Applicant(s)
Frank Hoffman
(Reg. No. 26468)
340 Kingsland Street
Nutley, New Jersey 07110
Telephone: (973) 235-3916
Telefax: (973) 235-2363

FH:ms
Enc.
237901

MAY 25 2006

PTO/SB/44 (02-01)
Approved for use through 01/31/2004. OMB 0651-0033
U.S. Patent and Trademark Office; U.S. DEPARTMENT OF COMMERCE
Under the Paperwork Reduction Act of 1995, no persons are required to respond to a collection of information unless it displays a valid OMB control number.
(Also Form PTO-1050)

UNITED STATES PATENT AND TRADEMARK OFFICE
CERTIFICATE OF CORRECTION

PATENT NO : 7,012,073

DATED : March 14, 2006

INVENTOR(S) : Michael G. Klug et al.

It is certified that error appears in the above-identified patent and that said Letters Patent is hereby corrected as shown below:

Column 62, Claim 17, lines 48-58, delete

" 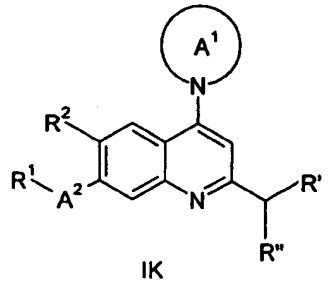 "

IK

and insert

-- 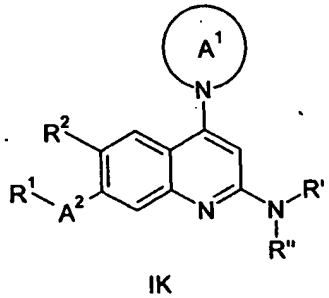 --

IK

Column 63, Claim 18, line 36, delete "aroup" and insert -- group --.

MAILING ADDRESS OF SENDER: Hoffmann-La Roche Inc.
Patent Dept.
340 Kingsland Street
Nutley, NJ 07110

PATENT NO. 7,012,073

No. of additional copies

Burden Hour Statement: This form is estimated to take 1.0 hour to complete. Time will vary depending upon the needs of the individual case. Any comment on the amount of time you are required to complete this form should be sent to the Chief Information Officer, U.S. Patent and Trademark Office, P.O. Box 1450, Alexandria, VA 22313-1450DO NOT SEND FEES OR COMPLETED FORMS TO THIS ADDRESS. SEND TO: Commissioner for Patents, P.O.Box 1450, Alexandria, VA 22313-1450.

MAY 2006

PTO/SB/44 (02-01)
Approved for use through 01/31/2004. OMB 0651-0033
U.S. Patent and Trademark Office; U.S. DEPARTMENT OF COMMERCE
Under the Paperwork Reduction Act of 1995, no persons are required to respond to a collection of information unless it displays a valid OMB control number.
(Also Form PTO-1050)

UNITED STATES PATENT AND TRADEMARK OFFICE
CERTIFICATE OF CORRECTION

PATENT NO : 7,012,073

DATED : March 14, 2006

INVENTOR(S) : Michael G. Klug et al.

It is certified that error appears in the above-identified patent and that said Letters Patent is hereby corrected as shown below:

Column 62, Claim 17, lines 48-58, delete

" 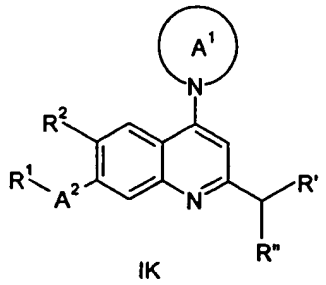 " and insert -- 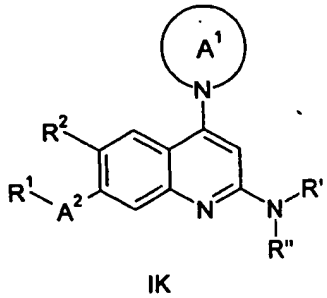 --

IK IK

Column 63, Claim 18, line 36, delete "aroup" and insert -- group --.

MAILING ADDRESS OF SENDER: Hoffmann-La Roche Inc.
Patent Dept.
340 Kingsland Street
Nutley, NJ 07110

PATENT NO. 7,012,073

No. of additional copies

Burden Hour Statement: This form is estimated to take 1.0 hour to complete. Time will vary depending upon the needs of the individual case. Any comment on the amount of time you are required to complete this form should be sent to the Chief Information Officer, U.S. Patent and Trademark Office, P.O. Box 1450, Alexandria, VA 22313-1450DO NOT SEND FEES OR COMPLETED FORMS TO THIS ADDRESS. SEND TO: Commissioner for Patents, P.O.Box 1450, Alexandria, VA 22313-1450.

UNITED STATES PATENT AND TRADEMARK OFFICE

Commissioner for Patents
United States Patent and Trademark Office
P.O. Box 1450
Alexandria, VA 22313-1450
www.uspto.gov

PHILIP S. JOHNSON
JOHNSON & JOHNSON
ONE JOHNSON & JOHNSON PLAZA
NEW BRUNSWICK, NJ 08933-7003

COPY MAILED

JAN 07 2005

OFFICE OF PETITIONS

In re Application of :
Pendharker and Gorman :
Application No. 10/896,455 :
Filed: July 22, 2004 :
Attorney Docket No. ETH-5082NP :

DECISION GRANTING PETITION

This is a decision on the petition filed November 22, 2004, under 37 CFR 1.10(d) requesting that the above-cited application be accorded a filing date of July 22, 2004, rather than the presently accorded filing date of July 21, 2004.

Petitioner alleges that the application was deposited with the Express Mail Service on July 22, 2004, notwithstanding the entry of July 21, 2004 as the "date-in" of the Express Mail receipt.. In support of the allegation, the petition is accompanied by a copy of the "Track and Confirm" communication from the United States Postal Service showing that Express Mail package EV138489609US was deposited with the United States Postal Service, Express Mail Service on July 22, 2004. The tracking number cited is the same number found on the application transmittal sheet that accompanied the original application papers. The evidence is convincing that the application papers were deposited on July 22, 2004.

In view of the above, the petition is granted. The new filing date for the above-cited application is July 22, 2004.

The application file is being returned to the Office of Initial Patent Examination for further processing with a filing date of July 22, 2004, and for issuance of a corrected filing receipt.

Any inquiries related to this decision should be directed to the undersigned at (571) 272-3222.

Kenya A. McLaughlin
Petitions Attorney
Office of Petitions

UNITED STATES PATENT AND TRADEMARK OFFICE

Commissioner for Patents
United States Patent and Trademark Office
P.O. Box 1450
Alexandria, VA 22313-1450
www.uspto.gov

McGarry Bair PC
171 Monroe Avenue N.W.
Suite 600
Grand Rapids, MI 49503

COPY MAILED

SEP 05 2006

OFFICE OF PETITIONS

In re Application of :
Wolters et al. :
Application No. 10/896,469 :
Filed: July 22, 2004 :
Attorney Docket No. WOLTERS P1US1 :

DECISION ON PETITION

This is a decision on the petition under 37 CFR §1.137(b), filed August 8, 2006.

This above-identified application became abandoned for failure to timely file a response to a final Office Action which was mailed on November 22, 2005. The final Office Action set a three (3) month shortened statutory period for reply. No extension of time were obtained under the provisions of 37 CFR §1.136(a). Accordingly, this application became abandoned on February 23, 2006. A Notice of Abandonment was mailed on June 20, 2006.

The requirements for a grantable petition under 37 CFR §1.137(b) have been met. This petition is hereby **Granted**.

A three (3) month extension of time was requested. However, pursuant to 37 CFR §1.136, an extension of time must be filed prior to the expiration of the maximum extendable period for reply. See In re Application of S., 8 USPQ2d 1630, 1631 (Comm'r Pats. 1988) Petitioner's six (6) month statutory period expired on May 23, 2006. Petitioner is ineligible for any extensions of time. Accordingly, deposit account number 50-2003 will be credited with $510.00 for fees paid to acquire an extension of time.

The Request for Continued Examination (RCE), and the amendment submitted with the instant petition will be forwarded to Technology Center 3600 for further processing.

Telephone inquiries concerning this matter should be directed to the undersigned at (571) 272-3215.

Charlema R. Grant

Charlema R. Grant
Petitions Attorney
Office of Petitions

UNITED STATES PATENT AND TRADEMARK OFFICE

COMMISSIONER FOR PATENTS
UNITED STATES PATENT AND TRADEMARK OFFICE
P.O. BOX 1450
ALEXANDRIA, VA 22313-1450
www.uspto.gov

Philip S. Johnson
Johnson & Johnson
One Johnson & Johnson Plaza
New Brunswick, NJ 08933-7003

COPY MAILED

MAR 0 1 2005

OFFICE OF PETITIONS

In re Application of	:	
Volker Niermann	:	
Application No. 10/896,481	:	DECISION GRANTING
Filed: July 22, 2004	:	PETITION
Attorney Docket No. CRD-5108	:	

This is a decision on the petition filed February 7, 2005, requesting that the above-identified application be accorded a filing date of July 22, 2004, rather than the presently accorded date of July 21, 2004. The petition is properly treated as a petition under 37 CFR 1.10(d).

The petition is **GRANTED**.

Applicant requests the earlier filing date on the basis that the application was purportedly deposited with Express Mail Service on July 22, 2004 pursuant to 37 CFR 1.10. While the copy of the Express Mail label receipt no. EV065835962US bears a handwritten "date-in" of July 21, 2004, petitioner has provided a copy of results from the U. S. Postal Service (USPS) Express Mail Track and Confirm database, which shows that the package in question was deposited on July 22, 2004. Applicants are alleging that the date of mailing shown in the "date-in" is a USPS error and the correct date of mailing pursuant to 37 CFR 1.10 is July 22, 2004. The same Express Mail number appears on the originally filed application papers.

The Office considers the date the paper or fee is shown to have been deposited as "Express Mail" to be the "date-in" on the Express Mail label, MPEP 513. However, in view of the results from the USPS Track and Confirm database, it is confirmed that the package bearing Express Mail label No. EV065835962US was accepted on July 22, 2004.

There is no fee required for filing this petition. In view thereof, the fee of $130 submitted with the instant petition, will be credited to petitioner's deposit account in due course.

This application file is being returned to the Office of Initial Patent Examination Division for **correction of the filing date to July 22, 2004.** Thereafter, the application file will be forwarded to Technology Center 3700 for examination in due course.

Telephone inquiries concerning this matter may be directed to the undersigned at (571) 272-3223.

Marianne E. Jenkins

Marianne E. Jenkins
Petitions Examiner
Office of Petitions
Office of the Deputy Commissioner
for Patent Examination Policy

UNITED STATES PATENT AND TRADEMARK OFFICE

COMMISSIONER FOR PATENTS
UNITED STATES PATENT AND TRADEMARK OFFICE
P.O. BOX 1450
ALEXANDRIA, VA 22313-1450
www.uspto.gov

COPY MAILED

MAR 1 7 2006

OFFICE OF PETITIONS

MOTOROLA INC
600 NORTH US HIGHWAY 45
ROOM AS437
LIBERTYVILLE, IL 60048-5343

In re Application of :
Lundholm, et al. : DECISION ON PETITION
Application No. 10/896,490 :
Filed: July 22, 2004 :
Atty. Dkt. No.: CS10123C01 :

This decision is in response to the "PETITION UNDER 37 C.F.R. § 1.181 TO WITHDRAW ABANDONMENT," filed February 17, 2006. This matter is being treated under 37 CFR 1.181 as a petition to withdraw the holding of abandonment.

The petition under 37 CFR 1.181 is hereby **GRANTED**.

This application was held abandoned October 28, 2005, for failure to timely file a proper response to the final Office action mailed July 27, 2005. The non-final Office action set a three month shortened statutory period for reply. No petition for extension of time was timely requested. Notice of Abandonment was mailed February 7, 2006.

Petitioner argues that a response to the non-final Office action was timely submitted October 26, 2005 in accordance with the Certificate of Transmission procedures outlined at 37 CFR 1.8. Petitioner has included a copy of the response to the Office action bearing a certificate of facsimile in accordance with 37 CFR 1.8 along with a copy of a USPTO Auto-Reply Facsimile Transmission acknowledging receipt of the reply dated October 26, 2005 as evidence of receipt of the submission.

A review of the application file does not indicate receipt of the response purportedly submitted October 26, 2005, however, the response will be considered timely as it complies with the requirements of 37 CFR 1.8(b) in that (1) the Office was promptly informed of the previous timely mailing, (2) a copy of the previously submitted correspondence with certificate of facsimile thereon has been supplied, and (3) statements attesting to the previous timely mailing have been submitted.

In view of the above, the Notice of Abandonment is hereby VACATED and the Notice of Abandonment is WITHDRAWN.

This application is being forwarded to Technology Center 2600 for further processing.

Telephone inquiries regarding this decision should be directed to the undersigned at (571) 272-3205.

Alesia M. Brown
Petitions Attorney
Office of Petitions

UNITED STATES PATENT AND TRADEMARK OFFICE

UNITED STATES DEPARTMENT OF COMMERCE
United States Patent and Trademark Office
Address: COMMISSIONER FOR PATENTS
P.O. Box 1450
Alexandria, Virginia 22313-1450
www.uspto.gov

Ballard Spahr LLP
SUITE 1000
999 PEACHTREE STREET
ATLANTA, GA 30309-3915

Mail Date: 04/21/2010

Applicant	: Paul M. Lizardi	: DECISION ON REQUEST FOR
Patent Number	: 7618776	: RECALCULATION of PATENT
Issue Date	: 11/17/2009	: TERM ADJUSTMENT IN VIEW
Appliction No	: 10/896,513	: OF WYETH AND NOTICE OF INTENT TO
Filed	: 07/22/2004	: ISSUE CERTIFICATE OF CORRECTION
		:

The Request for Recalculation is **GRANTED** to the extent indicated.

The patent term adjustment has been determined to be **672** days. The USPTO will *sua sponte* issue a certificate of correction reflecting the amount of PTA days determined by the recalculation.

Prior to the issuance of the certificate of correction, the USPTO will afford patentee an opportunity to be heard and request reconsideration. Accordingly, patentee has **one month or thirty (30) days**, whichever is longer, to file a request for reconsideration of this patent term adjustment calculation. See 35 U.S.C. 154(b)(3)(B)(ii) and 37 CFR 1.322(a)(4). No extensions of time will be granted under 37 CFR 1.136.

Patentee should use document code PET.OP if electronically filing a request for reconsideration of this patent term adjustment calculation. The patentee must also include the information required by 37 CFR 1.705(b)(2) and the fee required by 37 CFR 1.18(e). If patentee does not file a timely request for reconsideration of this patent term adjustment calculation including the information required by 37 CFR 1.705(b)(2) and the fee required by 37 CFR 1.18(e), the USPTO will issue a certificate of correction reflecting the PTA determination noted above.

Patentee should be aware that in order to preserve the right to review in the United States District Court for the District of Columbia of the USPTO patent term adjustment determination, patentee must ensure that he or she also take the steps required under 35 U.S.C. 154(b)(4)(A) in a timely manner. Nothing in the request for recalculation should be construed as providing an alternative time frame for commencing a civil action under 35 U.S.C. 154(b)(4)(A).

Any questions concerning this decision should be directed to the Office of Patent Legal Administration at 571-272-7702.

UNITED STATES PATENT AND TRADEMARK OFFICE

COMMISSIONER FOR PATENTS
UNITED STATES PATENT AND TRADEMARK OFFICE
P.O. BOX 1450
ALEXANDRIA, VA 22313-1450
www.uspto.gov

MACMILLAN, SOBANSKI & TODD, LLC
ONE MARITIME PLAZA - FIFTH FLOOR
720 WATER STREET
TOLEDO OH 43604

COPY MAILED

DEC 28 2006

OFFICE OF PETITIONS

In re Application of
Reid Baldwin
Application No. 10/896,527
Filed: July 22, 2004
Attorney Docket No. 81101789

ON PETITION

This is a decision on the petition under 37 CFR 1.137(b) to revive the above-identified application, filed June 13, 2006.

The petition is GRANTED.

The application became abandoned for failure to pay the issue fee on or before May 8, 2006. A Notice of Abandonment was mailed on June 13, 2006. Receipt is acknowledged of the requisite issue fee on June 13, 2006.

The application file does not indicate a change of address has been filed in this case, although the address given on the petition differs from the address of record. If appropriate, a change of address should be filed in this case in accordance with MPEP 601.03. A courtesy copy of this decision is being mailed to the address noted on the petition. However, until otherwise instructed, all future correspondence regarding this application will be mailed solely to the address of record.

The application is being forwarded to Publishing Division.

Telephone inquires related to this decision should be directed to the undersigned at (571) 272-3204. Telephone inquiries related to processing at Publishing Division should be directed to (571) 272-4200.

Sherry D. Brinkley
Petitions Examiner
Office of Petitions

cc: DAVID B. KELLY
330 TOWN CENTER DRIVE
SUITE 800
DEARBORN, MI 48126

UNITED STATES PATENT AND TRADEMARK OFFICE

Commissioner for Patents
United States Patent and Trademark Office
P.O. Box 1450
Alexandria, VA 22313-1450
www.uspto.gov

UNISYS CORPORATION
UNISYS WAY
MAIL STATION: E8-114
BLUE BELL PA 19424

COPY MAILED

DEC 16 2009

OFFICE OF PETITIONS

In re Application of	:	
Cavanagh et al.	:	
Application No. 10/896,562	:	ON PETITION
Filed: July 22, 2004	:	
Attorney Docket No. TN341	:	

This is a decision on the petition under 37 C.F.R. § 1.137(b), filed October 22, 2009, to revive the above-identified application.

The petition is **GRANTED**.

The petition satisfies the requirements of 37 CFR 1.137(b) in that petitioner has supplied (1) the reply in the form of the Issue Fee Transmittal with payment of the issue fee (previously received on October 7, 2009), (2) the petition fee, and (3) a proper statement of unintentional delay.

Telephone inquiries concerning this decision should be directed to the undersigned at (571) 272-3206.

This matter is being referred to the Office of Data Management for processing into a patent.

Liana Walsh
Petitions Examiner
Office of Petitions

UNITED STATES PATENT AND TRADEMARK OFFICE

Commissioner for Patents
United States Patent and Trademark Office
P.O. Box 1450
Alexandria, VA 22313-1450
www.uspto.gov

PHILIP S. JOHNSON
JOHNSON & JOHNSON
ONE JOHNSON & JOHNSON PLAZA
NEW BRUNSWICK, NJ 08933-7003

COPY MAILED

APR 08 2005

OFFICE OF PETITIONS

In re Application of	:	
Volker Niermann	:	DECISION GRANTING
Application No. 10/896,571	:	PETITION
Filed: July 22, 2004	:	
Attorney Docket No. CRD-5107	:	

This is a decision on the petition, filed February 7, 2005, which is being treated under 37 CFR 1.10(d), requesting that the above-identified application be accorded a filing date of July 22, 2004, rather than the presently accorded filing date of July 21, 2004.

Petitioner requests the later filing date on the basis that the application was purportedly deposited with the U.S. Postal Service (USPS) as Express Mail on July 22, 2004, pursuant to the requirements of 37 CFR 1.10. In support, petitioner submitted a copy of Express Mail receipt number EV065835976US bearing a handwritten "date-in" of July 21, 2004. In further support, the petition is accompanied by a copy of the USPS Track/Confirm system information showing that the package in question bearing the same Express Mail number found on the utility patent application transmittal accompanying the original application papers located in the official file, was accepted on July 22, 2004.

In view of the above, the evidence is convincing that the application was deposited as "Express Mail" with the US Postal Service on July 22, 2004. Accordingly, the instant application is entitled to a filing date of July 22, 2004, and has been so accorded.

The petition is granted. The $130.00 petition fee is unnecessary and will be credited to petitioner's deposit account in due course.

This matter is being referred to Technology Center AU 3731 for examination in due course.

Telephone inquires specific to this matter should be directed to Wan Laymon at (571) 271-3220.

Frances Hicks

Frances Hicks
Lead Petitions Examiner
Office of Petitions
Office of the Deputy Commissioner
for Patent Examination Policy

UNITED STATES PATENT AND TRADEMARK OFFICE

COMMISSIONER FOR PATENTS
UNITED STATES PATENT AND TRADEMARK OFFICE
P.O. BOX 1450
ALEXANDRIA, VA 22313-1450
www.uspto.gov

MAILED

NOV 16 2004

DIRECTOR'S OFFICE
TECHNOLOGY CENTER 3600

Ned W. Randle
Polster, Lieder, Woodruff & Lucchesi, L.C.
12412 Powerscourt Drive, Suite 200
St. Louis, Missouri 63131-3615
(314) 238-2400

In re Application of: Anthony Eric Sprouse II	:	PETITION TO ACCEPT
Application No. 10/896,572	:	COLOR DRAWINGS
Filed: July 22, 2004	:	UNDER
Attorney Docket No.: ROHO 8720 U1	:	37 C.F.R. 1.84(a)(2)
For: OFFICE CHAIR with INFLATABLE CELLULAR INSERT	:	

This is a decision on Applicant's petition under 37 C.F.R. 1.84(a)(2) filed on July 22, 2004 requesting the acceptance of color drawings for the above-identified application.

The petition is **DENIED**.

This invention is directed to an office chair having an inflatable cellular insert. The color associated with the drawings is only being used to identify different pressure loads.

The Petitioner is requesting the acceptance of color drawings because:

- Color drawings are necessary to best illustrate the differences between the pressure loads on the pressure maps of Figures 6-11.

The criteria for accepting color drawings in a patent application is set forth in MPEP 608.02 VIII and 37 CFR 1.84(a)(2) Standards for drawings. 37 CFR 1.84(a)(2) states:

"(2) *Color*. On rare occasions, color drawings may be necessary as the only practical medium by which to disclose the subject matter sought to be patented in a utility or design patent application or the subject matter of a statutory invention registration. The color drawings must be of sufficient quality such that all details in the drawings are reproducible in black and white in the printed patent. "

Additionally, the petition must also include:

(i) the fee set forth in 37 C.F.R. 1.17(h);

(ii) three (3) sets of color drawings;

(iii) a black and white photocopy that accurately depicts, to the extent possible, the subject matter shown in the color drawing. However, the requirement has been waived. See 1246 O.G. 106 (May 22, 2001);

(iv) an amendment to the specification to insert (unless the specification contains or has been previously amended to contain) the following language as the first paragraph of the brief description of the drawings:

> The patent or application file contains at least one drawing executed in color. Copies of this patent or patent application publication with color drawing(s) will be provided by the Office upon request and payment of the necessary fee.

With regard to the criteria for accepting color drawings, as set forth above, the use of color drawings in the application under consideration is not considered the only practical medium for disclosing the subject matter to be patented. The application has five other drawings which provide a detailed explanation of the invention and the proposed color drawings (Figures 6-11) are only relying on the use of color for convenience.

Drawing Figures 6-11 could be easily modified by placing each figure on a separate sheet, enlarging it, and using different shading, cross hatching or shapes for the various pressure loads. Such modifications to the drawings would make them as easy to understand as the proposed color drawings.

Further, the color drawings are not sufficient quality such that all details in the drawings are reproducible in black and white in the printed patent.

Accordingly, the request for the acceptance of color drawings in this application is **DENIED**.

In order to expedite prosecution, it is suggested that the applicant cancel all of the color drawings (Figures 6-11), all references to these figures in the specification, and the subject matter in the specification which refers to the color drawings under the BRIEF DESCRIPTION OF THE DRAWINGS.

Peter M. Cuomo
Supervisory Patent Examiner
Art Unit 3636
703-308-0827
pmc 11/16/04

UNITED STATES PATENT AND TRADEMARK OFFICE

UNITED STATES DEPARTMENT OF COMMERCE
United States Patent and Trademark Office
Address: COMMISSIONER FOR PATENTS
P.O. Box 1450
Alexandria, Virginia 22313-1450
www.uspto.gov

APPL NO.	FILING OR 371 (c) DATE	ART UNIT	FIL FEE REC'D	ATTY.DOCKET NO	DRAWINGS	TOT CLMS	IND CLMS
10/896,573	07/21/2004	2857	2222	110003.00106.04EN053	14	72	9

CONFIRMATION NO. 9042

CORRECTED FILING RECEIPT

OC000000014433157

42980
ROCKWELL AUTOMATION, INC./(QB)
ATTENTION: SUSAN M. DONAHUE
1201 SOUTH SECOND STREET
MILWAUKEE, WI 53204

Date Mailed: 11/23/2004

Receipt is acknowledged of this regular Patent Application. It will be considered in its order and you will be notified as to the results of the examination. Be sure to provide the U.S. APPLICATION NUMBER, FILING DATE, NAME OF APPLICANT, and TITLE OF INVENTION when inquiring about this application. Fees transmitted by check or draft are subject to collection. Please verify the accuracy of the data presented on this receipt. **If an error is noted on this Filing Receipt, please write to the Office of Initial Patent Examination's Filing Receipt Corrections, facsimile number 703-746-9195. Please provide a copy of this Filing Receipt with the changes noted thereon. If you received a "Notice to File Missing Parts" for this application, please submit any corrections to this Filing Receipt with your reply to the Notice. When the USPTO processes the reply to the Notice, the USPTO will generate another Filing Receipt incorporating the requested corrections (if appropriate).**

Applicant(s)

Milan Karasek, Kolin, CZECH REPUBLIC;

Power of Attorney:

James O'Shaughnessy–27667
Alexander Gerasimow–28610
Keith Baxter–31233
Scott Diring–35119
R Speroff–37450
William Walbrun–37464
Michael Jaskolski–37551
John Miller–38560
John Pienkos–42997
Adam Forman–46707

Domestic Priority data as claimed by applicant

Foreign Applications

If Required, Foreign Filing License Granted: 09/24/2004

The country code and number of your priority application, to be used for filing abroad under the Paris Convention, is US10/896,573

Projected Publication Date: 01/26/2006

Non-Publication Request: No

Early Publication Request: No

Title

Method for monitoring operating characteristics of a single axis machine

Preliminary Class

702

LICENSE FOR FOREIGN FILING UNDER
Title 35, United States Code, Section 184
Title 37, Code of Federal Regulations, 5.11 & 5.15

GRANTED

The applicant has been granted a license under 35 U.S.C. 184, if the phrase "IF REQUIRED, FOREIGN FILING LICENSE GRANTED" followed by a date appears on this form. Such licenses are issued in all applications where the conditions for issuance of a license have been met, regardless of whether or not a license may be required as set forth in 37 CFR 5.15. The scope and limitations of this license are set forth in 37 CFR 5.15(a) unless an earlier license has been issued under 37 CFR 5.15(b). The license is subject to revocation upon written notification. The date indicated is the effective date of the license, unless an earlier license of similar scope has been granted under 37 CFR 5.13 or 5.14.

This license is to be retained by the licensee and may be used at any time on or after the effective date thereof unless it is revoked. This license is automatically transferred to any related applications(s) filed under 37 CFR 1.53(d). This license is not retroactive.

The grant of a license does not in any way lessen the responsibility of a licensee for the security of the subject matter as imposed by any Government contract or the provisions of existing laws relating to espionage and the national security or the export of technical data. Licensees should apprise themselves of current regulations especially with respect to certain countries, of other agencies, particularly the Office of Defense Trade Controls, Department of State (with respect to Arms, Munitions and Implements of War (22 CFR 121-128)); the Office of Export Administration, Department of Commerce (15 CFR 370.10 (j)); the Office of Foreign Assets Control, Department of Treasury (31 CFR Parts 500+) and the Department of Energy.

NOT GRANTED

No license under 35 U.S.C. 184 has been granted at this time, if the phrase "IF REQUIRED, FOREIGN FILING LICENSE GRANTED" DOES NOT appear on this form. Applicant may still petition for a license under 37 CFR 5.12, if a license is desired before the expiration of 6 months from the filing date of the application. If 6 months has lapsed from the filing date of this application and the licensee has not received any indication of a secrecy order under 35 U.S.C. 181, the licensee may foreign file the application pursuant to 37 CFR 5.15(b).

UNITED STATES PATENT AND TRADEMARK OFFICE

COMMISSIONER FOR PATENTS
UNITED STATES PATENT AND TRADEMARK OFFICE
P.O. BOX 1450
ALEXANDRIA, VA 22313-1450
www.uspto.gov

COPY MAILED

JUN 12 2008

OFFICE OF PETITIONS

BRINKS HOFER GILSON & LIONE
P.O. BOX 10395
CHICAGO IL 60610

In re Patent No. 7,310,083 :
Issued: December 18, 2007 :
Application No. 10/896,595 : PATENT TERM ADJUSTMENT
Filed: July 22, 2004 :
Dkt. No.: 9281-4882 :

This is a decision on the "REQUEST FOR RECONSIDERATION OF PATENT TERM ADJUSTMENT," filed February 12, 2008. This matter is being properly treated under 37 CFR 1.705(d).

The application for patent term adjustment ("PTA") under 37 CFR 1.705(d) is **DISMISSED**.

The above-identified application matured into U.S. Patent No. 7,310,083 on December 18, 2007. The instant request for reconsideration was timely filed in accordance with 37 C.F.R. § 1.705(d). The patent issued with a PTA of 540 days. Patentees argue that the patent is entitled to an adjustment of 689 days. Patentees argue that the patent is entitled to an additional adjustment of 149 days because the Office failed to issue the patent within three years of the date of filing of the application in accordance with 37 CFR 1.703(b).

An overall adjustment of 540 days can be attributed to the Office in accordance with 37 CFR 1.702(a)(1). There was no failure by applicants to engage in reasonable efforts to conclude prosecution.

Patentees argue that the patent is entitled to further adjustment for the Office's failure to issue the patent within three years from the date upon which the application was filed.

If an application is entitled to an adjustment under 35 U.S.C. 154(b)(1)(B) (and 37 C.F.R. § 1.704(b)), the entire period during which the application was pending (except for periods excluded under 35 U.S.C. 154(b)(1)(B)(i)-(iii)), and not just the period beginning three years after the actual filing date of the application, is the period of delay under 35 U.S.C.

154(b)(1)(B) in determining whether periods of delay overlap under 35 U.S.C. 154(b)(2)(A). Thus, any days of delay for Office issuance of the application that overlap with the days of patent term adjustment accorded prior to the issuance of the patent will not result in any additional patent term adjustment. *See*, 35 U.S.C. 154(b)(1)(B), 35 U.S.C. 154(b)(2)(A), and 37 CFR § 1.703(f). See also *Revision of Patent Term Extension and Patent Term Adjustment Provisions; Final Rule,* 69 Red. Reg. 21704 (April 22, 2004).

In view thereof, at the time of issuance, the patent was entitled to an adjustment of 540 days, as indicated thereon.

Any request for reconsideration of this decision must be submitted within two months of the mail date of the instant decision. The time period for reconsideration may not be extended pursuant to 37 CFR 1.136.

Patentees' deposit account has been charged the required application for patent term adjustment fee of $200.00.

Telephone inquiries specific to this matter should be directed to Petitions Attorney Alesia M. Brown at (571) 272-3205.

Kerry Fries

Kerry Fries
Senior Legal Advisor
Office of Patent Legal Administration
Office of Deputy Commissioner
for Patent Examination Policy

8-20-04

status 40 IFW

JC56 AUG 19 2004 PATENT & TRADEMARK OFFICE

Docket No.
288086/0002
IGD:AEW

IN THE UNITED STATES PATENT AND TRADEMARK OFFICE

Applicants: **Vincent LaStelle**

Group Art Unit: **not yet assigned** 1743

Application No.: **10/896,607**

Examiner: **not yet assigned**
Alexander, Lyle

Filed: **July 22, 2004**

For: **FECAL OCCULT BLOOD TESTING DEVICE AND METHOD**

Date: August 19, 2004

Commissioner for Patents
P.O. Box 1450
Alexandria, VA 22313-1450

PETITION TO MAKE SPECIAL UNDER 37 C.F.R. § 1.102

Sir:

Applicant respectfully requests that the above-identified application be made Special and advanced out of turn for Examination.

This Petition is submitted pursuant to 37 C.F.R. § 1.102 and M.P.E.P. § 708.02(X) ("INVENTIONS RELATING TO HIV/AIDS AND CANCER"), which provides that "the U.S. patent and Trademark Office will accord 'special' status to patent applications relating to HIV/AIDS and cancer." Applicant respectfully submits that the present invention relates to the diagnosis and treatment of cancer, particularly cancer of the digestive tract, including colon and rectal cancer. More specifically, the present invention covers devices and methods for testing for blood in fecal or stool samples. The improved devices and methods result in earlier, more reliable diagnosis of cancer, which results in improved success in treatment of the cancer.

SSL-DOCS1 1487301v1

08/23/2004 EAREGAY1 00000064 194709 10896607
01 FC:1460 130.00 DA

PETITION GRANTED

Richard Crispino
Special Program Examiner
TC 1700 APR 26 2005

UNITED STATES PATENT AND TRADEMARK OFFICE

COMMISSIONER FOR PATENTS
UNITED STATES PATENT AND TRADEMARK OFFICE
P.O. BOX 1450
ALEXANDRIA, VA 22313-1450
www.uspto.gov

Paper No.

PEACOCK MYERS, P.C.
201 THIRD STREET, N.W.
SUITE 1340
ALBUQUERQUE, NM 87102

COPY MAILED

JUL 10 2006

OFFICE OF PETITIONS

In re Application of	:	
Joel Silver	:	DECISION ON PETITION
Application No. 10/896,608	:	
Filed: July 21, 2004	:	
Attorney Docket No. 70047-48	:	

This is a decision on the "PETITION FOR REVIVAL OF AN APPLICATION FOR PATENT ABANDONED FOR FAILURE TO NOTIFY THE OFFICE OF A FOREIGN OR INTERNATIONAL FILING (37 CFR 1.137(f)) filed January 6, 2006.

The petition is **GRANTED**.

Petitioner states that the instant nonprovisional application is the subject of a foreign or international application filed on July 21, 2005. However, the US Patent and Trademark Office was unintentionally not notified of this filing within 45 days subsequent to the filing of the foreign or international application.

In view of the above, this application became abandoned pursuant to 35 U.S.C. 122(b)(2)(B)(iii) and 37 CFR 1.213(c) for failure to timely notify the Office of the filing of an application in a foreign country, or under a multilateral international agreement, that requires publication of applications 18 months after filing.

A petition under 37 CFR 1.137(f) must be accompanied by:

(1) the reply, which is met by the notification of such filing in a foreign country or under a multinational treaty;

(2) the petition fee as set forth in 37 CFR 1.17(m); and

(3) a statement that the entire delay in filing the required reply from the due date of the reply until the filing of a grantable petition was unintentional.

The instant petition has been found to be in compliance with 37 CFR 1.137(f). Accordingly, the failure to timely notify the Office of a foreign or international filing within 45 days after the date of filing of such foreign or international application as provided by 35 U.S.C. 122(b)(2)(B)(iii) and 37 CFR 1.213(c) is accepted as having been unintentionally delayed.

The previous Request and Certification under 35 U.S.C. 122(b)(2)(B)(i) has been rescinded. A Notice Regarding Rescission of Nonpublication Request indicating a projected publication date of October 19, 2006 accompanies this decision on petition.

The application will be examined in Technology Center AU 2877 in due course.

Telephone inquiries regarding this decision should be directed to the undersigned at (571) 272-3219.

Nancy Johnson
Petitions Attorney
Office of Petitions

Attachment: Communication Regarding Rescission of Nonpublication Request and/or Notice of Foreign Filing

SPE RESPONSE FOR CERTIFICATE OF CORRECTION

Paper No.: _____

DATE : 03-31-09

TO SPE OF : ART UNIT 2886

SUBJECT : Request for Certificate of Correction for Appl. No.: 10/896608 Patent No.: 7477377

Please respond to this request for a certificate of correction within 7 days.

FOR IFW FILES:

Please review the requested changes/corrections as shown in the **COCIN** document(s) in the IFW application image. No new matter should be introduced, nor should the scope or meaning of the claims be changed.

Please complete the response (see below) and forward the completed response to scanning using document code **COCX**.

FOR PAPER FILES:

Please review the requested changes/corrections as shown in the attached certificate of correction. Please complete this form (see below) and forward it with the file to:

Certificates of Correction Branch (CofC)
South Tower - 9A22
Palm Location 7580

Angela Green
Certificates of Correction Branch
703-308-9390 ext. 123

Thank You For Your Assistance

The request for issuing the above-identified correction(s) is hereby:
Note your decision on the appropriate box.

- ☑ **Approved** — **All** changes apply.
- ☐ **Approved in Part** — Specify below which changes **do not** apply.
- ☐ **Denied** — State the reasons for denial below.

Comments: _____

SPE — Art Unit 2886

UNITED STATES PATENT AND TRADEMARK OFFICE

Commissioner for Patents
United States Patent and Trademark Office
P.O. Box 1450
Alexandria, VA 22313-1450
www.uspto.gov

FISH & RICHARDSON PC
P.O. BOX 1022
MINNEAPOLIS, MN 55440-1022

COPY MAILED
NOV 02 2006
OFFICE OF PETITIONS

In re Application of	:	
COOK	:	
Application No. 10/896,626	:	DECISION ON PETITION
Filed: July 22, 2004	:	TO WITHDRAW
Attorney Docket No. 17127-016001	:	FROM RECORD
	:	

This is a decision on the Request to Withdraw as attorney or agent of record under 37 C.F.R. § 1.36(b), filed March 10, 2006.

The request is **APPROVED**.

A grantable request to withdraw as attorney/agent of record must be signed by every attorney/agent seeking to withdraw or contain a clear indication that one attorney is signing on behalf of another/others. A request to withdraw will not be approved unless at least 30 (thirty) days would remain between the date of approval and the later of the expiration date of a time to file a response or the expiration date of the maximum time period which can be extended under 37 C.F.R. § 1.136(a).

The request was signed by Denis G. Maloney on behalf of all attorneys of record. All attorneys/agents associated with the Customer Number 26161 have been withdrawn.

Applicant is reminded that there is no attorney of record at this time.

The correspondence address of record has been changed and all future correspondence will be directed to the first named inventor Chad L. Cook Chang at the address indicated below until otherwise properly notified by the applicant.

There is no outstanding Office action that requires a reply from the applicant.

Telephone inquiries concerning this decision should be directed to Patricia Volpe at 571-272-6825.

PAVolpe

Patricia A. Volpe
Petitions Examiner
Office of Petitions

cc: CHAD L. COOK
165 Sheldonville Road
North Attleborough, MA 02760

UNITED STATES PATENT AND TRADEMARK OFFICE

UNITED STATES DEPARTMENT OF COMMERCE
United States Patent and Trademark Office
Address: COMMISSIONER FOR PATENTS
P.O. Box 1450
Alexandria, Virginia 22313-1450
www.uspto.gov

APPLICATION NUMBER	FILING OR 371 (c) DATE	FIRST NAMED APPLICANT	ATTY. DOCKET NO./TITLE
10/896,626	07/22/2004	Chad L. Cook	17127-016001

CONFIRMATION NO. 8956

OC000000021072855

26161
FISH & RICHARDSON PC
P.O. BOX 1022
MINNEAPOLIS, MN 55440-1022

Date Mailed: 11/02/2006

NOTICE REGARDING CHANGE OF POWER OF ATTORNEY

This is in response to the Power of Attorney filed 03/10/2006.

- The withdrawal as attorney in this application has been accepted. Future correspondence will be mailed to the new address of record. 37 CFR 1.33.

PATRICIA A VOLPE
OP (571) 272-6825

FORMER ATTORNEY/AGENT COPY

UNITED STATES PATENT AND TRADEMARK OFFICE

Commissioner for Patents
United States Patent and Trademark Office
P.O. Box 1450
Alexandria, VA 22313-1450
www.uspto.gov

Fish & Richardson P.C.
225 Franklin Street
Boston, MA 02110

COPY MAILED

SEP 06 2006

OFFICE OF PETITIONS

In re Application of	:	
Chad L. Cook	:	
Application No. 10/896,627	:	DECISION ON PETITION
Filed: July 22, 2004	:	TO WITHDRAW
Attorney Docket No. 17127-006001	:	FROM RECORD
	:	

This is a decision on the Request to Withdraw as attorney or agent of record under 37 C.F.R. § 1.36(b), filed March 10, 2006.

The request is **NOT APPROVED**.

A grantable request to withdraw as attorney/agent of record must be signed by every attorney/agent seeking to withdraw or contain a clear indication that one attorney is signing on behalf of another/others. A request to withdraw will not be approved unless at least 30 (thirty) days would remain between the date of approval and the later of the expiration date of a time to file a response or the expiration date of the maximum time period which can be extended under 37 C.F.R. § 1.136(a).

The Office cannot approve the request at this time since the reasons provided do not meet any of the conditions under the mandatory or permissive categories enumerated in 37 CFR 10.40. Section 10.40 of Title 37 of the Code of Federal Regulation states, "[a] practitioner shall not withdraw from employment in a proceeding before the Office without permission from the Office[.]" More specifically, 37 CFR 10.40 states, "[i]f paragraph (b) of this section is not applicable, a practitioner may not request permission to withdraw in matter pending before the Office unless such request or such withdrawal is" for one the permissive reasons listed in 37 CFR 10.40(c). The reasons set forth in the request, **the assignee failed to pay the attorney's bills after due notification and the elapse of a substantial period of time**, do not meet any of the conditions set forth in 37 CFR 10.40 because the assignee has properly intervened in accordance with 37 CFR 3.373(b).

All future communications from the Office will continue to be directed to the above-listed address until otherwise notified by applicant.

Telephone inquiries concerning this decision should be directed to Terri Williams at 571-272-2991.

David Bucci
Petitions Examiner
Office of Petitions

cc: Black Dragon Software
430 Bedford Street
Suite 00
Lexington, MA 02420

cc: David L. Smith
93 Sugarloaf Dr.
Tiburon, CA 94920-1685

cc: David L. Smith
659 Chaparral Circle
Napa, CA 94558

UNITED STATES PATENT AND TRADEMARK OFFICE

Commissioner for Patents
United States Patent and Trademark Office
P.O. Box 1450
Alexandria, VA 22313-1450
www.uspto.gov

Fish & Richardson P.C.
225 Franklin Street
Boston, MA 02110

COPY MAILED

AUG 29 2007

OFFICE OF PETITIONS

In re Application of	:	
Chad L. Cook	:	
Application No. 10/896,627	:	DECISION ON PETITION
Filed: July 22, 2004	:	TO WITHDRAW
Attorney Docket No. 17127-006001	:	FROM RECORD
	:	

This is a decision on the Request to Withdraw as attorney or agent of record under 37 C.F.R. § 1.36(b), filed April 2, 2007.

The request is **APPROVED**.

A grantable request to withdraw as attorney/agent of record must be signed by every attorney/agent seeking to withdraw or contain a clear indication that one attorney is signing on behalf of another/others. A request to withdraw will not be approved unless at least 30 (thirty) days would remain between the date of approval and the later of the expiration date of a time to file a response or the expiration date of the maximum time period which can be extended under 37 C.F.R. § 1.136(a).

The request was signed by Denis G. Maloney on behalf of all attorneys of record. All attorneys/agents have been withdrawn. Applicant is reminded that there is no attorney of record at this time.

All future correspondence will be directed to the first named inventor Chad L. Cook at the address indicated below.

There is an outstanding Office action mailed July 31, 2007 that requires a reply from the applicant.

Telephone inquiries concerning this decision should be directed to Terri Williams at 571-272-2991.

T. Williams
Terri Williams
Petitions Examiner
Office of Petitions

cc: **Chad L. Cook**
165 Sheldonville Road
North Attleborough, MA 02760

cc: **David L. Smith**
93 Sugarloaf Dr.
Tiburon, CA 94920-1685

cc: **David L. Smith**
659 Chaparral Circle
Napa, CA 94558

UNITED STATES PATENT AND TRADEMARK OFFICE

UNITED STATES DEPARTMENT OF COMMERCE
United States Patent and Trademark Office
Address: COMMISSIONER FOR PATENTS
P.O. Box 1450
Alexandria, Virginia 22313-1450
www.uspto.gov

APPLICATION NUMBER	FILING OR 371 (c) DATE	FIRST NAMED APPLICANT	ATTY. DOCKET NO./TITLE
10/896,627	07/22/2004	Chad L. Cook	17127-006001

CONFIRMATION NO. 8957

OC000000025593570

Fish & Richardson P.C.
225 Franklin Street
Boston, MA 02110

Date Mailed: 08/29/2007

NOTICE REGARDING CHANGE OF POWER OF ATTORNEY

This is in response to the Power of Attorney filed 04/02/2007.

- The withdrawal as attorney in this application has been accepted. Future correspondence will be mailed to the new address of record. 37 CFR 1.33.

Gerri Williams

Office of Initial Patent Examination (571) 272-4000, or 1-800-PTO-9199

FORMER ATTORNEY/AGENT COPY

UNITED STATES PATENT AND TRADEMARK OFFICE

Commissioner for Patents
United States Patent and Trademark Office
P.O. Box 1450
Alexandria, VA 22313-1450
www.uspto.gov

FISH & RICHARDSON PC
P.O. BOX 1022
MINNEAPOLIS MN 55440-1022

COPY MAILED

JUN 1 2 2007

OFFICE OF PETITIONS

In re Application of
Chad L. Cook
Application No. 10/896,628
Filed: July 22, 2004
Attorney Docket No. 17127-005001

DECISION ON PETITION
TO WITHDRAW
FROM RECORD

This is a decision on the Request to Withdraw as attorney or agent of record under 37 C.F.R. § 1.36(b) filed March 10, 2006 and April 2, 2007.

The request is **APPROVED**.

A grantable request to withdraw as attorney/agent of record must be signed by every attorney/agent seeking to withdraw or contain a clear indication that one attorney is signing on behalf of another/others. A request to withdraw will not be approved unless at least 30 (thirty) days would remain between the date of approval and the later of the expiration date of a time to file a response or the expiration date of the maximum time period which can be extended under 37 C.F.R. § 1.136(a).

The request was signed by Denis G. Maloney on behalf of all attorneys of record who are associated with customer No. 26161.

All attorneys/agents associated with the Customer Number 26161 have been withdrawn.

Applicant is reminded that there is no attorney of record at this time.

The request to change the correspondence of record is not acceptable as the requested correspondence address is not that of: (1) the first named signing inventor; or (2) an intervening assignee of the entire interest under 37 C.F.R 3.71. All future communications from the Office will be directed to the first named signing inventor at the first copied address below until otherwise properly notified by the applicant.

In order to request or take action in a patent matter, the assignee must establish its ownership of the patent to the satisfaction of the Director. In this regard, a Statement under 37 CFR 3.73(b) must

have either: (i) documentary evidence of a chain of title from the original owner to the assignee (*e.g.*, copy of an executed assignment), and a statement affirming that the documentary evidence of the chain of title from the original owner to the assignee was or concurrently is being submitted for recordation pursuant to § 3.11; or (ii) a statement specifying where documentary evidence of a chain of title from the original owner to the assignee is recorded in the assignment records of the Office (*e.g.*, reel and frame number).

There are no pending office actions at the present time.

Telephone inquiries concerning this decision should be directed to undersigned at 571-272-1642.

April M. Wise
Petitions Examiner
Office of Petitions

cc: CHAD L. COOK
165 SHELDONVILLE ROAD
NORTH ATTLEBOROUGH, MA 02760

cc: DAVID L. SMITH
BLACK DRAGON SOFTWARE
430 BEDFORD STREET
SUITE 100
LEXINGTON, CA 02420

UNITED STATES PATENT AND TRADEMARK OFFICE

UNITED STATES DEPARTMENT OF COMMERCE
United States Patent and Trademark Office
Address: COMMISSIONER FOR PATENTS
P.O. Box 1450
Alexandria, Virginia 22313-1450
www.uspto.gov

APPLICATION NUMBER	FILING OR 371 (c) DATE	FIRST NAMED APPLICANT	ATTY. DOCKET NO./TITLE
10/896,628	07/22/2004	Chad L. Cook	17127-005001

CONFIRMATION NO. 8959

OC000000024314032

26161
FISH & RICHARDSON PC
P.O. BOX 1022
MINNEAPOLIS, MN 55440-1022

Date Mailed: 06/11/2007

NOTICE REGARDING CHANGE OF POWER OF ATTORNEY

This is in response to the Power of Attorney filed 03/10/2006.

- The withdrawal as attorney in this application has been accepted. Future correspondence will be mailed to the new address of record. 37 CFR 1.33.

Office of Initial Patent Examination (571) 272-4000, or 1-800-PTO-9199
FORMER ATTORNEY/AGENT COPY

UNITED STATES PATENT AND TRADEMARK OFFICE

Commissioner for Patents
United States Patent and Trademark Office
P.O. Box 1450
Alexandria, VA 22313-1450
www.uspto.gov

EDWARDS ANGELL PALMER & DODGE LLP
P.O. BOX 55874
BOSTON MA 02205

COPY MAILED

JUL 16 2007

OFFICE OF PETITIONS

In re Application of	:	
Steven J. King, et al.	:	
Application No. 10/896,631	:	DECISION ON PETITION
Filed: July 22, 2004	:	TO WITHDRAW
Attorney Docket No. 59424(49510)	:	FROM RECORD
	:	

This is a decision on the Request to Withdraw as attorney or agent of record under 37 C.F.R. § 1.36(b) filed January 31, 2007.

The request is **APPROVED**.

A grantable request to withdraw as attorney/agent of record must be signed by every attorney/agent seeking to withdraw or contain a clear indication that one attorney is signing on behalf of another/others. A request to withdraw will not be approved unless at least 30 (thirty) days would remain between the date of approval and the later of the expiration date of a time to file a response or the expiration date of the maximum time period which can be extended under 37 C.F.R. § 1.136(a).

The request was signed by George N. Chaclas on behalf of all attorneys of record who are associated with customer No. 21874.

All attorneys/agents associated with the Customer Number 21874 have been withdrawn.

Applicant is reminded that there is no attorney of record at this time.

The request to change the correspondence of record is not acceptable as the requested correspondence address is not that of: (1) the first named signing inventor; or (2) an intervening assignee of the entire interest under 37 C.F.R 3.71. All future communications from the Office will be directed to the first named signing inventor at the first copied address below until otherwise properly notified by the applicant.

In order to request or take action in a patent matter, the assignee must establish its ownership of the patent to the satisfaction of the Director. In this regard, a Statement under 37 CFR 3.73(b) must have either: (i) documentary evidence of a chain of title from the original owner to the assignee (*e.g.*, copy of an executed assignment), and a statement affirming that the documentary evidence of the chain of title from the original owner to the assignee was or concurrently is being submitted for recordation pursuant to § 3.11; or (ii) a statement specifying where documentary evidence of a chain of title from the original owner to the assignee is recorded in the assignment records of the Office (*e.g.*, reel and frame number).

There is an outstanding Office action mailed June 25, 2007 that requires a reply from the applicant.

Telephone inquiries concerning this decision should be directed to undersigned at 571-272-1642.

April M. Wise
Petitions Examiner
Office of Petitions

cc: STEVEN J. KING
7 OLD COLONY ROAD
OLD SAYBROOK, CT 06475

cc: JUSTIN S. RERKO, ESQ.
511 WINDSTONE TRAIL
ALPHARETTA, GA 30004

UNITED STATES PATENT AND TRADEMARK OFFICE

Commissioner for Patents
United States Patent and Trademark Office
P.O. Box 1450
Alexandria, VA 22313-1450
www.uspto.gov

Fish & Richardson P.C.
225 Franklin Street
Boston, MA 02110

COPY MAILED

SEP 12 2006

OFFICE OF PETITIONS

In re Application of	:	
Chad L. Cook	:	
Application No. 10/896,632	:	DECISION ON PETITION
Filed: July 22, 2004	:	TO WITHDRAW
Attorney Docket No. 17127-004001	:	FROM RECORD
	:	

This is a decision on the Request to Withdraw as attorney or agent of record under 37 C.F.R. § 1.36(b), filed March 10, 2006.

The request is **NOT APPROVED**.

A grantable request to withdraw as attorney/agent of record must be signed by every attorney/agent seeking to withdraw or contain a clear indication that one attorney is signing on behalf of another/others. A request to withdraw will not be approved unless at least 30 (thirty) days would remain between the date of approval and the later of the expiration date of a time to file a response or the expiration date of the maximum time period which can be extended under 37 C.F.R. § 1.136(a).

The Office cannot approve the request at this time since the reasons provided do not meet any of the conditions under the mandatory or permissive categories enumerated in 37 CFR 10.40. Section 10.40 of Title 37 of the Code of Federal Regulation states, "[a] practitioner shall not withdraw from employment in a proceeding before the Office without permission from the Office[.]" More specifically, 37 CFR 10.40 states, "[i]f paragraph (b) of this section is not applicable, a practitioner may not request permission to withdraw in matter pending before the Office unless such request or such withdrawal is" for one the permissive reasons listed in 37 CFR 10.40(c). The reasons set forth in the request, **the assignee failed to pay the attorney's bills after due notification and the elapse of a substantial period of time**, do not meet any of the conditions set forth in 37 CFR 10.40 because the assignee has not properly intervened in accordance with 37 CFR 3.373(b).

All future communications from the Office will continue to be directed to the above-listed address until otherwise notified by applicant.

Telephone inquiries concerning this decision should be directed to Terri Williams at 571-272-2991.

David Bucci
Petitions Examiner
Office of Petitions

cc: Black Dragon Software
430 Bedford Street
Suite 100
Lexington, MA 02420

cc: David L. Smith
93 Sugarloaf Drive
Tiburon, CA 94920-1685

cc: David L. Smith
659 Chaparral Circle
Napa, CA 94558

UNITED STATES PATENT AND TRADEMARK OFFICE

Commissioner for Patents
United States Patent and Trademark Office
P.O. Box 1450
Alexandria, VA 22313-1450
www.uspto.gov

Fish & Richardson P.C.
225 Franklin Street
Boston MA 02110

COPY MAILED

OCT 2 2 2007

OFFICE OF PETITIONS

In re Application of	:	
Chad L. Cook	:	
Application No. 10/896,632	:	DECISION ON PETITION
Filed: July 22, 2004	:	TO WITHDRAW
Attorney Docket No. 17127-004001	:	FROM RECORD
	:	

This is a decision on the Request to Withdraw as attorney or agent of record under 37 C.F.R. § 1.36(b), filed April 2, 2007.

The request is **NOT APPROVED**.

A grantable request to withdraw as attorney/agent of record must be signed by every attorney/agent seeking to withdraw or contain a clear indication that one attorney is signing on behalf of another/others. A request to withdraw will not be approved unless at least 30 (thirty) days would remain between the date of approval and the later of the expiration date of a time to file a response or the expiration date of the maximum time period which can be extended under 37 C.F.R. § 1.136(a).

The Office cannot approve the request at this time since the reasons provided do not meet any of the conditions under the mandatory or permissive categories enumerated in 37 CFR 10.40. Section 10.40 of Title 37 of the Code of Federal Regulation states, "[a] practitioner shall not withdraw from employment in a proceeding before the Office without permission from the Office[.]" More specifically, 37 CFR 10.40 states, "[i]f paragraph (b) of this section is not applicable, a practitioner may not request permission to withdraw in matter pending before the Office unless such request or such withdrawal is" for one the permissive reasons listed in 37 CFR 10.40(c). The reasons set forth in the request, ***failure of assignee to pay attorney's bills.....*** do not meet any the conditions set forth in 37 CFR 10.40.

In order to request or take action in a patent matter, the assignee must establish its ownership of the patent to the satisfaction of the Director. In this regard, a Statement under 37 CFR 3.73(b) must have either: (i) documentary evidence of a chain of title from the original owner to the assignee (e.g., copy of an executed assignment), and a statement affirming that the documentary evidence of the chain of title from the original owner to the assignee was or concurrently is being

submitted for recordation pursuant to § 3.11; or (ii) a statement specifying where documentary evidence of a chain of title from the original owner to the assignee is recorded in the assignment records of the Office (e.g., reel and frame number). A statement under 37 CFR 3.73(b) must be filed so show assignee's ownership.

All future communications from the Office will continue to be directed to the above-listed address until otherwise notified by applicant.

Telephone inquiries concerning this decision should be directed to Terri Williams at 571-272-2991.

T. Williams

Terri Williams
Petitions Examiner
Office of Petitions

cc: **Black Dragon Software**
430 Bedford Street
Suite 100
Lexington, MA 02420

cc: **David L. Smith**
93 Sugarloaf Dr.
Tiburon, CA 94920-1685

cc: **David L. Smith**
659 Chaparral Circle
Napa, CA 94558

cc: **Chad L. Cook**
165 Sheldonville Road
North Attleborough, MA 02760

UNITED STATES PATENT AND TRADEMARK OFFICE

Commissioner for Patents
United States Patent and Trademark Office
P.O. Box 1450
Alexandria, VA 22313-1450
www.uspto.gov

Wolf Greenfield & Sacks, PC
Federal Reserve Plaza
600 Atlantic Avenue
Boston MA 02210-2206

COPY MAILED
DEC 0 6 2006
OFFICE OF PETITIONS

In re Application of
Morgan et al.
Application No. 10/896,640
Filed: July 22, 2004
Attorney Docket No. C1104.70130US01

DECISION ON PETITIONS
UNDER 37 CFR 1.78(a)(3) AND (a)(6)

This is a decision on the petitions under 37 CFR §§ 1.78(a)(3) and 1.78(a)(6), filed March21, 2006, to accept an unintentionally delayed claim under 35 U.S.C. §§120 and 119(e) for the benefit of the prior-filed applications set forth in the amendment filed with the present petition.

The petitions are **GRANTED.**

A petition for acceptance of a claim for late priority under 37 CFR §§ 1.78(a)(3) and 1.78(a)(6) is only applicable to those applications filed on or after November 29, 2000. Further, the petition is appropriate only after the expiration of the period specified in 37 CFR §§ 1.78(a)(2)(ii) and 1.78(a)(5)(ii). In addition, the petition under 37 CFR §§ 1.78(a)(3) and 1.78(a)(6) must be accompanied by:

(1) the reference required by 35 U.S.C. §§ 120 and 119(e) and 37 CFR §§ 1.78(a)(2)(i) and 1.78(a)(5)(i) of the prior-filed application, unless previously submitted;
(2) the surcharge set forth in § 1.17(t); and
(3) a statement that the entire delay between the date the claim was due under 37 CFR §§ 1.78(a)(2)(ii) and 1.78(a)(5)(ii) and the date the claim was filed was unintentional. The Director may require additional information where there is a question whether the delay was unintentional.

Additionally, the instant nonprovisional application must be pending at the time of filing of the reference to the prior-filed provisional application as required by 37 CFR 1.78(a)(5)(ii). Further, the nonprovisional application claiming the benefit of the prior-filed provisional application must have been filed within twelve months of the filing date of the prior-filed provisional application.

All the above requirements having been satisfied, the late claim for benefit of priority under 35 U.S.C. §§ 120 and 119(e) is accepted as being unintentionally delayed.[1]

The granting of the petition to accept the delayed benefit claim to the prior-filed applications under 37 CFR §§ 1.78(a)(3) and 1.78(a)(6) should not be construed as meaning that this application is entitled to the benefit of the filing date of the prior-filed applications. In order for this application to be entitled to the benefit of the prior-filed applications, all other requirements under 35 U.S.C. §§120 and 1.78(a)(1) and (a)(2) and under 35 U.S.C. §119(e) and 37 CFR 1.78(a)(4) and (a)(5) must be met. Similarly, the fact that the corrected Filing Receipt accompanying this decision on petition includes the prior-filed applications should not be construed as meaning that applicant is entitled to the claim for benefit of priority to the prior-filed applications noted thereon. Accordingly, the examiner will, in due course, consider this benefit claim and determine whether the application is entitled to the benefit of the earlier filing date.

A corrected Filing Receipt, which includes the priority claim to the prior-filed applications, accompanies this decision on petition.

Any questions concerning this matter may be directed to the undersigned at (571) 272-3211. All other inquiries concerning either the examination procedures or status of the application should be directed to the Technology Center.

This application is being forwarded to Technology Center Art Unit 2622 for consideration by the examiner of the claim under 35 U.S.C. §§120 and 119(e) of the prior-filed nonprovisional and provisional applications.

Christina T. Donnell

Christina Tartera Donnell
Senior Petitions Attorney
Office of Petitions

ATTACHMENT: Corrected Filing Receipt

---

[1] 37 CFR 1.78(a)(3) and 1.78(a)(6) require a statement that the entire delay between the date the claim was due under 37 CFR 1.78(a)(2)(ii) and 1.78(a)(5)(ii) and the date the claim was filed was unintentional. Because the statement contained in the petition varies from the language required by 37 CFR 1.78(a)(3) and (a)(6), the Office is construing the statement contained in the present petition as the statement required by 37 CFR 1.78(a)(3) and (a)(6).

UNITED STATES PATENT AND TRADEMARK OFFICE

UNITED STATES DEPARTMENT OF COMMERCE
United States Patent and Trademark Office
Address: COMMISSIONER FOR PATENTS
P.O. Box 1450
Alexandria, Virginia 22313-1450
www.uspto.gov

APPL NO.	FILING OR 371 (c) DATE	ART UNIT	FIL FEE REC'D	ATTY.DOCKET NO	DRAWINGS	TOT CLMS	IND CLMS
10/896,640	07/22/2004	2622	4770	C1104.70130US01	113	89	5

CONFIRMATION NO. 8940

CORRECTED FILING RECEIPT

OC000000021499236

23628
WOLF GREENFIELD & SACKS, PC
FEDERAL RESERVE PLAZA
600 ATLANTIC AVENUE
BOSTON, MA 02210-2206

Date Mailed: 12/06/2006

Receipt is acknowledged of this regular Patent Application. It will be considered in its order and you will be notified as to the results of the examination. Be sure to provide the U.S. APPLICATION NUMBER, FILING DATE, NAME OF APPLICANT, and TITLE OF INVENTION when inquiring about this application. Fees transmitted by check or draft are subject to collection. Please verify the accuracy of the data presented on this receipt. **If an error is noted on this Filing Receipt, please mail to the Commissioner for Patents P.O. Box 1450 Alexandria Va 22313-1450. Please provide a copy of this Filing Receipt with the changes noted thereon. If you received a "Notice to File Missing Parts" for this application, please submit any corrections to this Filing Receipt with your reply to the Notice. When the USPTO processes the reply to the Notice, the USPTO will generate another Filing Receipt incorporating the requested corrections (if appropriate).**

Applicant(s)

Frederick M. Morgan, Quincy, MA;
George G. Mueller, Boston, MA;
Kevin J. Dowling, Westford, MA;
Ihor A. Lys, Milton, MA;
Charles H. Cella, Pembroke, MA;
Edward Nortrup, Stoneham, MA;

Assignment For Published Patent Application

Color Kinetics, Inc., Boston, MA

Power of Attorney: The patent practitioners associated with Customer Number **23628**.

Domestic Priority data as claimed by applicant

This appln claims benefit of 60/490,317 07/25/2003
and claims benefit of 60/588,090 07/15/2004
and is a CIP of 09/716,819 11/20/2000 PAT 7,014,336
which claims benefit of 60/166,533 11/18/1999
and claims benefit of 60/201,140 05/02/2000
and claims benefit of 60/235,678 09/27/2000
This application 10/896,640
is a CIP of 10/325,635 12/19/2002
which claims benefit of 60/341,898 12/19/2001
and claims benefit of 60/407,185 08/28/2002
This application 10/896,640
is a CIP of 10/799,348 03/12/2004
which claims benefit of 60/454,039 03/12/2003
This application 10/896,640
is a CIP of 09/213,581 12/17/1998 PAT 7,038,398
which claims benefit of 60/090,920 06/26/1998
and claims benefit of 60/079,285 03/25/1998
and claims benefit of 60/078,861 03/20/1998
and claims benefit of 60/068,792 12/24/1997
and claims benefit of 60/071,281 12/17/1997

Foreign Applications

If Required, Foreign Filing License Granted: 09/14/2004

The country code and number of your priority application, to be used for filing abroad under the Paris Convention, is
US10/896,640

Projected Publication Date: Not Applicable

Non-Publication Request: No

Early Publication Request: No

Title

Photography methods and systems

Preliminary Class

348

PROTECTING YOUR INVENTION OUTSIDE THE UNITED STATES

Since the rights granted by a U.S. patent extend only throughout the territory of the United States and have no effect in a foreign country, an inventor who wishes patent protection in another country must apply for a patent in a specific country or in regional patent offices. Applicants may wish to consider the filing of an international application under the Patent Cooperation Treaty (PCT). An international (PCT) application generally has the same effect as a regular national patent application in each PCT-member country. The PCT process **simplifies** the filing of patent applications on the same invention in member countries, but **does not result** in a grant of "an international patent" and does not eliminate the need of applicants to file additional documents and fees in countries where patent protection is desired.

Almost every country has its own patent law, and a person desiring a patent in a particular country must make an application for patent in that country in accordance with its particular laws. Since the laws of many countries differ in various respects from the patent law of the United States, applicants are advised to seek guidance from specific foreign countries to ensure that patent rights are not lost prematurely.

Applicants also are advised that in the case of inventions made in the United States, the Director of the USPTO must issue a license before applicants can apply for a patent in a foreign country. The filing of a U.S. patent application serves as a request for a foreign filing license. The application's filing receipt contains further information and guidance as to the status of applicant's license for foreign filing.

Applicants may wish to consult the USPTO booklet, "General Information Concerning Patents" (specifically, the section entitled "Treaties and Foreign Patents") for more information on timeframes and deadlines for filing foreign patent applications. The guide is available either by contacting the USPTO Contact Center at 800-786-9199, or it can be viewed on the USPTO website at http://www.uspto.gov/web/offices/pac/doc/general/index.html.

For information on preventing theft of your intellectual property (patents, trademarks and copyrights), you may wish to consult the U.S. Government website, http://www.stopfakes.gov. Part of a Department of Commerce initiative, this website includes self-help "toolkits" giving innovators guidance on how to protect intellectual property in specific countries such as China, Korea and Mexico. For questions regarding patent enforcement issues, applicants may call the U.S. Government hotline at 1-866-999-HALT (1-866-999-4158).

LICENSE FOR FOREIGN FILING UNDER
Title 35, United States Code, Section 184
Title 37, Code of Federal Regulations, 5.11 & 5.15

GRANTED

The applicant has been granted a license under 35 U.S.C. 184, if the phrase "IF REQUIRED, FOREIGN FILING LICENSE GRANTED" followed by a date appears on this form. Such licenses are issued in all applications where the conditions for issuance of a license have been met, regardless of whether or not a license may be required as set forth in 37 CFR 5.15. The scope and limitations of this license are set forth in 37 CFR 5.15(a) unless an earlier license has been issued under 37 CFR 5.15 (b). The license is subject to revocation upon written notification. The date indicated is the effective date of the license, unless an earlier license of similar scope has been granted under 37 CFR 5.13 or 5.14.

This license is to be retained by the licensee and may be used at any time on or after the effective date thereof unless it is revoked. This license is automatically transferred to any related applications(s) filed under 37 CFR 1.53(d). This license is not retroactive.

The grant of a license does not in any way lessen the responsibility of a licensee for the security of the subject matter as imposed by any Government contract or the provisions of existing laws relating to espionage and the national security or the export of technical data. Licensees should apprise themselves of current regulations especially with respect to certain countries, of other agencies, particularly the Office of Defense Trade Controls, Department of State (with respect to Arms, Munitions and Implements of War (22 CFR 121-128)); the Bureau of Industry and Security, Department of Commerce (15 CFR parts 730-774); the Office of Foreign Assets Control, Department of Treasury (31 CFR Parts 500+) and the Department of Energy.

NOT GRANTED

No license under 35 U.S.C. 184 has been granted at this time, if the phrase "IF REQUIRED, FOREIGN FILING LICENSE GRANTED" DOES NOT appear on this form. Applicant may still petition for a license under 37 CFR 5.12, if a license is desired before the expiration of 6 months from the filing date of the application. If 6 months has lapsed from the filing date of this application and the licensee has not received any indication of a secrecy order under 35 U.S.C. 181, the licensee may foreign file the application pursuant to 37 CFR 5.15(b).

UNITED STATES PATENT AND TRADEMARK OFFICE

Commissioner for Patents
United States Patent and Trademark Office
P.O. Box 1450
Alexandria, VA 22313-1450
www.uspto.gov

PAUL, HASTINGS, JANOFSKY & WALKER LLP
P.O. BOX 919092
SAN DIEGO, CA 92191-9092

COPY MAILED
OCT 3 0 2006
OFFICE OF PETITIONS

In re Application of	:	
William E. Franke et al	:	
Application No. 10/896,642	:	DECISION ON PETITION
Filed: July 21, 2004	:	TO WITHDRAW
Attorney Docket No. 37658.00005.UTL1	:	FROM RECORD
	:	

This is a decision on the Request to Withdraw as attorney or agent of record under 37 C.F.R. § 1.36(b), filed May 9, 2005.

The request is **NOT APPROVED** as moot.

A review of the file record indicates that the power of attorney to Amy E. Simpson and those practitioners associated with customer number 36183 have been revoked by the assignee of the patent application on March 24, 2006. Accordingly, the request to withdraw under 37 C.F.R. § 1.36(b) is moot.

All future communications from the Office will continue to be directed to the first below-listed address until otherwise notified by applicant.

All correspondence should be directed to All other inquiries concerning either the examination or status of the application should be directed to the Technology Center 2624.

Telephone inquires concerning this decision should be directed to Charles Smoot at 571-272- 3299.

David Bucci
Petitions Examiner
Office of Petitions

cc: BAKER & MCKENZIE LLP
PATENT DEPARTMENT
2001 Ross Avenue
Suite 2300
Dallas, TX 75201

cc: GANNON INTERNATIONAL, LTD.
1000 North Payne Street, Suite 200
Alexandria, VA 22314

UNITED STATES PATENT AND TRADEMARK OFFICE

UNITED STATES DEPARTMENT OF COMMERCE
United States Patent and Trademark Office
Address: COMMISSIONER FOR PATENTS
P.O. Box 1450
Alexandria, Virginia 22313-1450
www.uspto.gov

PROCOPIO, CORY, HARGREAVES & SAVITCH LLP
530 B STREET
SUITE 2100
SAN DIEGO, CA 92101

Mail Date: 04/20/2010

Applicant	: William E. Franke	: DECISION ON REQUEST FOR
Patent Number	: 7636457	: RECALCULATION of PATENT
Issue Date	: 12/22/2009	: TERM ADJUSTMENT IN VIEW
Appliction No	: 10/896,642	: OF WYETH AND NOTICE OF INTENT TO
Filed	: 07/21/2004	: ISSUE CERTIFICATE OF CORRECTION
		:

The Request for Recalculation is **GRANTED** to the extent indicated.

The patent term adjustment has been determined to be **1464** days. The USPTO will *sua sponte* issue a certificate of correction reflecting the amount of PTA days determined by the recalculation.

Prior to the issuance of the certificate of correction, the USPTO will afford patentee an opportunity to be heard and request reconsideration. Accordingly, patentee has **one month or thirty (30) days**, whichever is longer, to file a request for reconsideration of this patent term adjustment calculation. See 35 U.S.C. 154(b)(3)(B)(ii) and 37 CFR 1.322(a)(4). No extensions of time will be granted under 37 CFR 1.136.

Patentee should use document code PET.OP if electronically filing a request for reconsideration of this patent term adjustment calculation. The patentee must also include the information required by 37 CFR 1.705(b)(2) and the fee required by 37 CFR 1.18(e). If patentee does not file a timely request for reconsideration of this patent term adjustment calculation including the information required by 37 CFR 1.705(b)(2) and the fee required by 37 CFR 1.18(e), the USPTO will issue a certificate of correction reflecting the PTA determination noted above.

Patentee should be aware that in order to preserve the right to review in the United States District Court for the District of Columbia of the USPTO patent term adjustment determination, patentee must ensure that he or she also take the steps required under 35 U.S.C. 154(b)(4)(A) in a timely manner. Nothing in the request for recalculation should be construed as providing an alternative time frame for commencing a civil action under 35 U.S.C. 154(b)(4)(A).

Any questions concerning this decision should be directed to the Office of Patent Legal Administration at 571-272-7702.

UNITED STATES PATENT AND TRADEMARK OFFICE

Commissioner for Patents
United States Patent and Trademark Office
P.O. Box 1450
Alexandria, VA 22313-1450
www.uspto.gov

MR. S.H. DWORETSKY
AT&T CORP., ROOM 2A-207
ONE AT&T WAY
BEDMINSTER, NJ 07921

COPY MAILED

SEP 0 6 2005

OFFICE OF PETITIONS

In re Application of	:	
Engelmann et al	:	
Application No. 10/896,644	:	DECISION GRANTING PETITION
Filed: July 22, 2004	:	UNDER 37 CFR 1.137(b)
Attorney Docket No. 2002-0516	:	

This is a decision on the petition under 37 CFR 1.137(b), filed July 21, 2005, to revive the above-identified application.

The petition is **GRANTED**.

The petition satisfies the conditions for revival pursuant to the provisions of 37 CFR 1.137(b) in that (1) the reply; (2) the petition fee; and (3) the required statement of unintentional delay have been received. Accordingly, the reply to the Notice To File Missing Parts Of Nonprovisional Application of September 16, 2004, is accepted as having been unintentionally delayed.

Telephone inquiries concerning this decision should be directed to the undersigned at (571) 272-3208.

This matter is being referred to the Office of Initial Patent Examination.

Karen Creasy

Karen Creasy
Petitions Examiner
Office of Petitions
Office of the Deputy Commissioner
for Patent Examination Policy

SPE RESPONSE FOR CERTIFICATE OF CORRECTION

Paper No.: _____

DATE : 8/6/09

TO SPE OF : ART UNIT 2117 Kevin Ellis (Spe)

SUBJECT : Request for Certificate of Correction for Appl. No.: 10/896646 Patent No.: 7406638

Please respond to this request for a certificate of correction within 7 days.

FOR IFW FILES:

Please review the requested changes/corrections as shown in the **COCIN** document(s) in the IFW application image. No new matter should be introduced, nor should the scope or meaning of the claims be changed.

Please complete the response (see below) and forward the completed response to scanning using document code **COCX**.

FOR PAPER FILES:

Please review the requested changes/corrections as shown in the attached certificate of correction. Please complete this form (see below) and forward it with the file to:

Certificates of Correction Branch (CofC)
South Tower - 9A22
Palm Location 7580

Certificates of Correction Branch
703-308-9390 ext. _____

Thank You For Your Assistance

The request for issuing the above-identified correction(s) is hereby:
Note your decision on the appropriate box.

- ☒ **Approved** — **All** changes apply.
- ☐ **Approved in Part** — Specify below which changes **do not** apply.
- ☐ **Denied** — State the reasons for denial below.

Comments: _____

/Kevin L Ellis/ — **SPE**

2117 — **Art Unit**

UNITED STATES PATENT AND TRADEMARK OFFICE

Commissioner for Patents
United States Patent and Trademark Office
P.O. Box 1450
Alexandria, VA 22313-1450
www.uspto.gov

JJGJr: 02-06

Paper No: __

COPY MAILED

FEB 1 0 2006

OFFICE OF PETITIONS

PHILIP S. JOHNSON
JOHNSON & JOHNSON
ONE JOHNSON & JOHNSON PLAZA
NEW BRUNSWICK NJ 08933-7003

In re Application of	:	
Pendharkar, et al.	:	
Application No.: 10/896,647	:	ON PETITION
Filed: 22 July, 2004	:	
Attorney Docket No.: ETH-5084NP2	:	
	:	

This a decision on the petition filed on 22 November, 2004, that seeks a filing date of 22 July, 2004, for the instant application, and is considered under 37 C.F.R. §1.53 and 37 C.F.R. §1.10.

The petition is **GRANTED**.

BACKGROUND

This nonprovisional application was deposited on 23 July, 2004.

On 13 September, 2004, the Office mailed a "Notice of Omitted Items in a Nonprovisional Application," (the Notice) and indicated that a filing date had been granted, to wit: 21 July, 2004.

The Notice specified a reply period of two (2) months, and also informed Petitioner of alternative replies to the Notice.

Petitioner filed the original petition and averred that the filing date was 22 September, 2004 (sic). (Emphasis supplied.)

The Office replied on 5 November, 2004, and indicated that the Petitioner had provided insufficient evidence in support of the request.

Petitioner filed the instant petition on 22 November, 2004, this time averring that the correct filing date was 22 July, 2004, however, because Petitioner failed to reply timely and properly to the Notice of Missing Parts (oath/declaration and surcharge), the application went abandoned after midnight 13 December, 2004.

Petitioner now evidences an U.S. Postal Service (USPS) Express Mail Label bearing the label number EV 138489590 with a "Date In" set forth as "7 21 04," however, Petitioner also provides a copy of the USPS Track & Confirm statement obtained from the USPS website and setting forth: "ACCEPTANCE [by USPS], July 22, 2004, 4:19 p.m., HIGHLAND PARK, NJ[.]"

Petitioner's documentation adequately supports Petitioner's averment of a filing date of 22 July, 2004.

Accordingly, the reissue application is entitled to a filing date of 22 July, 2004.

The Notice mailed on 13 September, 2004, was sent in error as to the filing date and hereby vacated to the extent that it stated that the application was filed on 21 July, 2004.

CONCLUSION

The petition is **granted**; because the error was not that of the Office, the petition fee is not waived and is now charged to Deposit Account 10-0750.

This application is released to OIPE for further processing with a filing date of 22 July, 2004, for the entire application, with direction to OIPE to correct Office records and provide to Petitioner a corrected filing receipt setting forth a filing date of 22 July, 2004.

Telephone inquiries specific to this decision should be directed to the undersigned at (571) 272-3214.

John J. Gillon, Jr.
Senior Attorney
Office of Petitions

UNITED STATES PATENT AND TRADEMARK OFFICE

Commissioner for Patents
United States Patent and Trademark Office
P.O. Box 1450
Alexandria, VA 22313-1450
www.uspto.gov

JJGJr: 02-06

Paper No: __

COPY MAILED

FEB 1 0 2006

OFFICE OF PETITIONS

PHILIP S. JOHNSON
JOHNSON & JOHNSON
ONE JOHNSON & JOHNSON PLAZA
NEW BRUNSWICK NJ 08933-7003

In re Application of	:	
Pendharkar, et al.	:	
Application No.: 10/896,647	:	ON PETITION
Filed: 21 July, 2004	:	
Attorney Docket No.: ETH-5084NP2	:	
	:	

This is a decision on the petition filed on 23 September, 2005, alleging unintentional delay and requesting revival under 37 C.F.R. §1.137(b).

For the reasons set forth below, the petition under 37 C.F.R. §1.137(b) is **GRANTED** and the fee previously authorized but uncharged now is charged to Deposit Account 10-0750.

NOTE: The instant application went abandoned after midnight 13 December, 2004. The instant petition was filed on 23 September, 2005. Petitioner is cautioned against appearing to use as an unpaid extension of time the former delay measure of one year between abandonment and the filing of a petition. Petitioner must evidence diligence in the prosecution of the instant application.

BACKGROUND

It appears that:

- Petitioner failed to reply timely and properly to a Notice Missing Parts mailed on 13 September, 2004, with reply due absent extension of time on or before 13 December, 2004;
- the application went abandoned after midnight 13 December, 2004;
- the Office mailed a Notice of Abandonment on 9 June, 2005;
- Petitioner filed the instant petition to revive under 37 C.F.R. §1.137(b), with, inter alia, fee authorizations and the reply to the Notice of Missing Parts (oath/declaration and surcharge) and made the statement of unintentional delay.

STATUTES, REGULATIONS AND ANALYSIS

Congress has authorized the Commissioner to "revive an application if the delay is shown to the satisfaction of the Commissioner to have been "unavoidable." 35 U.S.C. §133 (1994).[1]

The regulations at 37 C.F.R. §1.137(a) and (b) set forth the requirements for a petitioner to revive a previously unavoidably or unintentionally, respectively, abandoned application under this congressional grant of authority. The language of 35 U.S.C. §133 and 37 C.F.R. §1.137(a) is clear, unambiguous, and without qualification: the delay in tendering the reply to the outstanding Office action, as well as filing the first petition seeking revival, must have been unavoidable for the reply now to be accepted on petition.[2]

Delays in responding properly raise the question whether delays are unavoidable.[3] Where there is a question whether the delay was unavoidable, Petitioners must meet the burden of establishing that the delay was unavoidable within the meaning of 35 U.S.C. §133 and 37 C.F.R. §1.137(a).[4]

---

[1] 35 U.S.C. §133 provides:
35 U.S.C. §133 Time for prosecuting application.
Upon failure of the applicant to prosecute the application within six months after any action therein, of which notice has been given or mailed to the applicant, or within such shorter time, not less than thirty days, as fixed by the Commissioner in such action, the application shall be regarded as abandoned by the parties thereto, unless it be shown to the satisfaction of the Commissioner that such delay was unavoidable.

[2] Therefore, by example, an unavoidable delay in the payment of the Filing Fee might occur if a reply is shipped by the US Postal Service, but due to catastrophic accident, the delivery is not made.

[3] See: *Changes to Patent Practice and Procedure*; *Final Rule Notice*, 62 *Fed. Reg.* at 53158-59 (October 10, 1997), 1203 *Off. Gaz. Pat. Office* at 86-87 (October 21, 1997).

[4] See: In re Application of G, 11 USPQ2d 1378, 1380 (Comm'r Pats. 1989).

And the Petitioner must be diligent in attending to the matter.[5] Failure to do so does not constitute the care required under Pratt, and so cannot satisfy the test for diligence and due care.

(By contrast, unintentional delays are those that do not satisfy the very strict statutory and regulatory requirements of unavoidable delay, and also, by definition, are not intentional.[6]))

Allegations as to
Unintentional Delay

The requirements for relief under the provisions of 37 C.F.R. §1.137(b) are: petition, fee, reply, showing of unintentional delay, and–where appropriate–a terminal disclaimer and fee.

Petitioner has satisfied the requirements of the regulation.

CONCLUSION

The petition under 37 C.F.R. §1.137(b) is **granted**.

The instant application is released to OIPE for further processing before being forwarded for substantive examination in due course.

Telephone inquiries concerning this decision may be directed to the undersigned at (571) 272-3214.

John J. Gillon, Jr.
Senior Attorney
Office of Petitions

---

[5] See: Diligence in Filing Petitions to Revive and Petitions to Withdraw the Holding of Abandonment, 1124 Off. Gaz. Pat. Office 33 (March 19, 1991). It was and is Petitioner's burden to exercise diligence in seeking either to have the holding of abandonment withdrawn or the application revived. See 1124 Off. Gaz. Pat. Office supra.

[6] Therefore, by example, an unintentional delay in the reply might occur if the reply and transmittal form are to be prepared for shipment by the US Postal Service, but other pressing matters distract one's attention and the mail is not timely deposited for shipment.

UNITED STATES PATENT AND TRADEMARK OFFICE

UNITED STATES DEPARTMENT OF COMMERCE
United States Patent and Trademark Office
Address: COMMISSIONER FOR PATENTS
P.O. Box 1450
Alexandria, Virginia 22313-1450
www.uspto.gov

IBM CORPORATION
PO BOX 12195
DEPT YXSA, BLDG 002
RESEARCH TRIANGLE PARK, NC 27709

Mail Date: 04/20/2010

Applicant	: Alan David Boulanger	: DECISION ON REQUEST FOR
Patent Number	: 7669240	: RECALCULATION of PATENT
Issue Date	: 02/23/2010	: TERM ADJUSTMENT IN VIEW
Appliction No	: 10/896,680	: OF WYETH AND NOTICE OF INTENT TO
Filed	: 07/22/2004	: ISSUE CERTIFICATE OF CORRECTION
		:

The Request for Recalculation is **GRANTED** to the extent indicated.

The patent term adjustment has been determined to be **1579** days. The USPTO will *sua sponte* issue a certificate of correction reflecting the amount of PTA days determined by the recalculation.

Prior to the issuance of the certificate of correction, the USPTO will afford patentee an opportunity to be heard and request reconsideration. Accordingly, patentee has **one month or thirty (30) days**, whichever is longer, to file a request for reconsideration of this patent term adjustment calculation. See 35 U.S.C. 154(b)(3)(B)(ii) and 37 CFR 1.322(a)(4). No extensions of time will be granted under 37 CFR 1.136.

Patentee should use document code PET.OP if electronically filing a request for reconsideration of this patent term adjustment calculation. The patentee must also include the information required by 37 CFR 1.705(b)(2) and the fee required by 37 CFR 1.18(e). If patentee does not file a timely request for reconsideration of this patent term adjustment calculation including the information required by 37 CFR 1.705(b)(2) and the fee required by 37 CFR 1.18(e), the USPTO will issue a certificate of correction reflecting the PTA determination noted above.

Patentee should be aware that in order to preserve the right to review in the United States District Court for the District of Columbia of the USPTO patent term adjustment determination, patentee must ensure that he or she also take the steps required under 35 U.S.C. 154(b)(4)(A) in a timely manner. Nothing in the request for recalculation should be construed as providing an alternative time frame for commencing a civil action under 35 U.S.C. 154(b)(4)(A).

Any questions concerning this decision should be directed to the Office of Patent Legal Administration at 571-272-7702.

UNITED STATES PATENT AND TRADEMARK OFFICE

Commissioner for Patents
United States Patent and Trademark Office
P.O. Box 1450
Alexandria, VA 22313-1450
www.uspto.gov

PHILIP S. JOHNSON
JOHNSON & JOHNSON
ONE JOHNSON & JOHNSON PLAZA
NEW BRUNSWICK NJ 08933-7003

COPY MAILED
OCT 0 2 2006
OFFICE OF PETITIONS

In re Application of	:	
Lochte et al.	:	DECISION ON
Application No.: 10/896,697	:	
Filing Date: July 21, 2004	:	PETITION UNDER
Docket No.: J&J-1925 DIV	:	
For: Tampon Having Apertured Film	:	37 CFR 1.137(b)
Cover Thermobonded To Fibrous	:	
Absorbent Structure	:	

This is a decision on the petition under 37 CFR 1.137(b), filed on August 2, 2006.

The petition is **DISMISSED**.

Any request for reconsideration of this decision must be submitted within TWO (2) MONTHS from the mail date of this decision. Extensions of time under 37 CFR 1.136(a) are permitted. The reconsideration request should include a cover letter entitled "Renewed Petition under 37 CFR 1.137(b)." This is **not** a final agency action within the meaning of 5 U.S.C. § 704.

This application became abandoned as of midnight on June 29, 2006 for failure to timely reply to the final Office action mailed on December 29, 2005. A Notice of Abandonment was mailed on July 13, 2006.

A grantable petition under 37 CFR 1.137(b) must be accompanied by: (1) the required reply, unless previously filed; (2) the petition fee as set forth in 37 CFR 1.17(m); (3) a statement that the entire delay in filing the required reply from the due date for the reply until the filing of a grantable petition pursuant to 37 CFR 1.137(b) was unintentional; and (4) any terminal disclaimer (and fee as set forth in 37 CFR 1.20(d)) required by 37 CFR 1.137(d). Where there is a question as to whether either the abandonment or the delay in filing a petition under 37 CFR 1.137 was unintentional, the Director may require additional information. See MPEP 711.03(c)(III)(C) and (D). The instant petition lacks item(s) (1).

Although the petition indicates that the "Response or action required is attached," review of the application file reveals that no such required reply is present. In the absence of the required reply to the final Office action mailed on December 29, 2005, it would be inappropriate to grant the requested relief at this time.

Further correspondence with respect to this matter should be addressed as follows:

By Mail: Mail Stop PETITION
Commissioner for Patents
P. O. Box 1450
Alexandria, VA 22313-1450

By hand: U. S. Patent and Trademark Office
Customer Service Window, Mail Stop Petitions
Randolph Building
401 Dulany Street
Alexandria, VA 22314

The centralized facsimile number is **(571) 273-8300.**

Telephone inquiries concerning this decision should be directed to the undersigned.

George M. Dombroske
PCT Legal Examiner
Office of PCT Legal Administration
on behalf of
Office of Petitions
Telephone: 571-272-3283
Facsimile: 571-273-0459

SPE RESPONSE FOR CERTIFICATE OF CORRECTION

Paper No.: _____

DATE : 10/17/06

TO SPE OF : ART UNIT 2623

SUBJECT : Request for Certificate of Correction for Appl. No.: **10/896724** Patent No.: **7035432**

Please respond to this request for a certificate of correction within 7 days.

Please review the requested changes/corrections as shown in the **COCIN** document(s) in the IFW application image. No new matter should be introduced, nor should the scope or meaning of the claims be changed.

Please complete the response (see below) and forward the completed response to scanning using document code **COCX**.

A Green

Angela Green
Certificates of Correction Branch
703.308.9380 ext. 123

Thank You For Your Assistance

The request for issuing the above-identified correction(s) is hereby:
Note your decision on the appropriate box.

- [X] **Approved** — All changes apply.
- [ ] **Approved in Part** — Specify below which changes **do not** apply.
- [ ] **Denied** — State the reasons for denial below.

Comments: _____

Matthew C. Bella

MATTHEW C. BELLA
SUPERVISORY PATENT EXAMINER
TECHNOLOGY CENTER 2600

2624
Art Unit

CgC

Atty. Docket No. 60,576-018

OIPE IAP28
SEP 2 1 2006
PATENT & TRADEMARK OFFICE

IN THE UNITED STATES PATENT AND TRADEMARK OFFICE

In re U.S. Patent No.	7,035,432 B2	
Inventor(s):	Joseph Szuba	
Serial No.	10/896,724	Examiner: Ryan J. Hesseltine
Issued:	May 23, 2006	Group Art Unit: 2623
Title:	**Method of Monitoring Sleeping Infant**	
Atty. Docket No.:	60,576-018	

Certificate
SEP 2 5 2006
of Correction

Commissioner of Patents & Trademarks
P.O. Box 1450
Alexandria, Virginia 22313-1450

REQUEST FOR CERTIFICATE OF CORRECTION UNDER 37 C.F.R. 1.322

Please Enter AW 2/30/07

Dear Sir:

Transmitted herewith is a Certificate of Correction for U.S. Patent 7,035,432 B2 issued April 25, 2006. Upon reviewing the claims, the patentee noted that the following typographical errors were made, which should be corrected as follows:

In Figure 1, please insert --20-- in reference to the "processor."

In column 4, line 58, please delete "an" and insert --a--.

Enclosed is our check in the amount of $100.00 as required for the filing of this Request. If there are any additional fees due, the Commissioner is authorized to charge our Deposit Account for those additional fees or credit the account for any overpayments regarding this Request.

The PTO did not receive the following listed item(s) The check

Respectfully submitted,

HOWARD & HOWARD ATTORNEYS, P.C.

September 11, 2006
Dated

Gregory D. DeGrazia
Registration No. 48,944
39400 Woodward Ave., Suite 101
Bloomfield Hills, MI 48304-5151
(248) 645-1483

SEP 2 5 2006

UNITED STATES PATENT AND TRADEMARK OFFICE

UNITED STATES DEPARTMENT OF COMMERCE
United States Patent and Trademark Office
Address: COMMISSIONER FOR PATENTS
P.O. Box 1450
Alexandria, Virginia 22313-1450
www.uspto.gov

SEED INTELLECTUAL PROPERTY LAW GROUP PLLC
701 FIFTH AVE
SUITE 5400
SEATTLE, WA 98104

Mail Date: 04/21/2010

Applicant	: Carlota Vinals y de Bassols	: DECISION ON REQUEST FOR
Patent Number	: 7641910	: RECALCULATION of PATENT
Issue Date	: 01/05/2010	: TERM ADJUSTMENT IN VIEW
Appliction No	: 10/896,725	: OF WYETH AND NOTICE OF INTENT TO
Filed	: 07/22/2004	: ISSUE CERTIFICATE OF CORRECTION
		:

The Request for Recalculation is **GRANTED** to the extent indicated.

The patent term adjustment has been determined to be **826** days. The USPTO will *sua sponte* issue a certificate of correction reflecting the amount of PTA days determined by the recalculation.

Prior to the issuance of the certificate of correction, the USPTO will afford patentee an opportunity to be heard and request reconsideration. Accordingly, patentee has **one month or thirty (30) days**, whichever is longer, to file a request for reconsideration of this patent term adjustment calculation. See 35 U.S.C. 154(b)(3)(B)(ii) and 37 CFR 1.322(a)(4). No extensions of time will be granted under 37 CFR 1.136.

Patentee should use document code PET.OP if electronically filing a request for reconsideration of this patent term adjustment calculation. The patentee must also include the information required by 37 CFR 1.705(b)(2) and the fee required by 37 CFR 1.18(e). If patentee does not file a timely request for reconsideration of this patent term adjustment calculation including the information required by 37 CFR 1.705(b)(2) and the fee required by 37 CFR 1.18(e), the USPTO will issue a certificate of correction reflecting the PTA determination noted above.

Patentee should be aware that in order to preserve the right to review in the United States District Court for the District of Columbia of the USPTO patent term adjustment determination, patentee must ensure that he or she also take the steps required under 35 U.S.C. 154(b)(4)(A) in a timely manner. Nothing in the request for recalculation should be construed as providing an alternative time frame for commencing a civil action under 35 U.S.C. 154(b)(4)(A).

Any questions concerning this decision should be directed to the Office of Patent Legal Administration at 571-272-7702.

UNITED STATES PATENT AND TRADEMARK OFFICE

Commissioner for Patents
United States Patent and Trademark Office
P.O. Box 1450
Alexandria, VA 22313-1450
www.uspto.gov

MAILED

MAY 17 2010

OFFICE OF PETITIONS

SEED INTELLECTUAL PROPERTY LAW GROUP PLLC
701 FIFTH AVE
SUITE 5400
SEATTLE WA 98104

In re Patent No. 7,641,910	:	DECISION ON REQUEST FOR
CARLOTA VINALS Y DE BASSOLS	:	RECONSIDERATION OF
Issue Date: January 5, 2010	:	PATENT TERM ADJUSTMENT
Application No. 10/896,725	:	AND
Filed: July 22, 2004	:	NOTICE OF INTENT TO ISSUE
Docket No. 400077.404D1	:	CERTIFICATE OF CORRECTION

This is a decision on the petition filed on March 4, 2010, which is being treated as a petition under 37 CFR 1.705(d) requesting that the patent term adjustment indicated on the above-identified patent be corrected to indicate that the term of the above-identified patent is extended or adjusted by nine hundred two (902) days.

The petition to correct the patent term adjustment indicated on the above-identified patent is **GRANTED to the extent indicated herein.** The term of the above-identified patent is extended or adjusted by nine hundred two (902) days.

Initially, the Office notes that the "DECISION ON REQUEST FOR RECALCULATION OF PATENT TERM ADJUSTMENT IN VIEW OF WYETH AND NOTICE OF INTENT TO ISSUE CERTIFICATE OF CORRECTION" mailed April 21, 2010, indicating that the patent term adjustment had been determined to be 826 days, was issued in error. The present decision on the petition under 37 CFR 1.705(d) supersedes the decision of April 21, 2010.

Patentee acknowledges 575 days of A delay and 373 days of B delay. However, patentee disputes the period of reduction pursuant to 37 CFR 1.704(c)(10) of 119 days for the filing of the amendment under § 1.312, including replacement drawings, on

September 9, 2009. Patentee asserts that the replacement drawings were filed as part of the amendment under § 1.312, which the examiner responded to on October 21, 2009. Patentee avers that the period of reduction under 37 CFR 1.704(c)(10) is properly calculated as 43 days, the number of days in the period beginning on September 9, 2009, the date the amendment under § 1.312, including replacement drawings, was filed, and ending on October 21, 2009, the mailing date of the Response to Rule 312 Communication.

The Office finds patentee's argument persuasive. The period of reduction of 119 days for applicant delay will be removed and a period of reduction of 43 days will be entered.

Accordingly, the patent term adjustment is 902 days (575 days of A delay + 373 days of B delay - 46 days of applicant delay).

The Office will *sua sponte* issue a certificate of correction. Pursuant to 37 CFR 1.322, the Office will not issue a certificate of correction without first providing assignee or patentee an opportunity to be heard. Accordingly, patentee is given **one (1) month or thirty (30) days**, whichever is longer, from the mail date of this decision to respond. No extensions of time will be granted under § 1.136.

The Office acknowledges the submission of the required fee of $200.00 set forth in 37 CFR 1.18(e).

This matter is being referred to the Certificates of Correction Branch for issuance of a certificate of correction. The Office will issue a certificate of correction indicating that the term of the above-identified patent is extended or adjusted by **nine hundred two (902) days.**

Telephone inquiries specific to this matter should be directed to the undersigned at (571) 272-3211.

Christina Tartera Donnell

Christina Tartera Donnell
Senior Petitions Attorney
Office of Petitions

Enclosure: Copy of DRAFT Certificate of Correction

UNITED STATES PATENT AND TRADEMARK OFFICE

CERTIFICATE OF CORRECTION

PATENT : 7,641,910 B2

DATED : Jan. 5, 2010 **DRAFT**

INVENTOR(S) : Vinals y de Bassols

It is certified that error appears in the above-identified patent and that said Letters Patent is hereby corrected as shown below:

On the cover page,

[*] Notice: Subject to any disclaimer, the term of this patent is extended or adjusted under 35 USC 154(b) by 453 days

Delete the phrase "by 453 days" and insert – by 902 days--

Day : Friday
Date: 5/14/2010

PALM INTRANET

Time: 16:28:23

PTA Calculations for Application: 10/896725			
Application Filing Date:	07/22/2004	PTO Delay (PTO):	948
Issue Date of Patent:	01/05/2010	Three Years:	0
Pre-Issue Petitions:	0	Applicant Delay (APPL):	122
Post-Issue Petitions:	0	Total PTA (days):	902
PTO Delay Adjustment:	76		

File Contents History

Number	Date	Contents Description	PTO	APPL	START
103	05/14/2010	ADJUSTMENT OF PTA CALCULATION BY PTO		43	
102	05/14/2010	ADJUSTMENT OF PTA CALCULATION BY PTO	119		
99	04/17/2010	PETITION DECISION - GRANTED			
98	03/04/2010	PETITION ENTERED			
97	02/03/2010	SEQUENCE MOVED TO PUBLIC DATABASE			
96	01/05/2010	RECORDATION OF PATENT GRANT MAILED			
95	12/16/2009	ISSUE NOTIFICATION MAILED			
94.5	07/29/2008	PTA 36 MONTHS	373		
94	01/05/2010	PATENT ISSUE DATE USED IN PTA CALCULATION			
93	10/30/2009	EXPORT TO FINAL DATA CAPTURE			
92	10/29/2009	DISPATCH TO FDC			
91	10/27/2009	APPLICATION IS CONSIDERED READY FOR ISSUE			
90	10/23/2009	ISSUE FEE PAYMENT VERIFIED			
89	10/23/2009	ISSUE FEE PAYMENT RECEIVED			
88	10/21/2009	MAIL RESPONSE TO 312 AMENDMENT (PTO-271)			
87	09/09/2009	RESPONSE TO AMENDMENT UNDER RULE 312			
86	09/09/2009	AMENDMENT AFTER NOTICE OF ALLOWANCE (RULE 312)		119	
85	09/09/2009	WORKFLOW - DRAWINGS FINISHED		0	
84	09/17/2009	FINISHED INITIAL DATA CAPTURE			
83	08/19/2009	SEQUENCE FORWARDED TO PUBS ON TAPE			
82	08/10/2009	MAIL NOTICE OF DRAWING INCONSISTENCY WITH SPECIFICATION			
81	08/10/2009	PUB NOTICE OF DRAWING INCONSISTENCY WITH SPECIFICATION			

80	07/27/2009	EXPORT TO INITIAL DATA CAPTURE			
79	07/29/2009	WORKFLOW - QUERY REQUEST - FINISH			
78	07/24/2009	MAIL NOTICE OF ALLOWANCE	92		67
77	07/23/2009	ISSUE REVISION COMPLETED			
76	07/23/2009	NOTICE OF ALLOWANCE DATA VERIFICATION COMPLETED			
75	07/23/2009	CASE DOCKETED TO EXAMINER IN GAU			
74	07/15/2009	ALLOWED CASE RETURNED TO THE EXAMINER FOR CLERICAL PROCESSING			
73	07/15/2009	DOCUMENT VERIFICATION			
72	07/06/2009	NOTICE OF ALLOWABILITY			
70	05/28/2009	CHANGE IN POWER OF ATTORNEY (MAY INCLUDE ASSOCIATE POA)			
69	05/26/2009	CORRESPONDENCE ADDRESS CHANGE			
68	05/12/2009	DATE FORWARDED TO EXAMINER			
67	12/23/2008	RESPONSE AFTER NON-FINAL ACTION			
66	10/03/2008	MAIL NON-FINAL REJECTION			
65	10/01/2008	NON-FINAL REJECTION			
64	07/30/2008	INFORMATION DISCLOSURE STATEMENT CONSIDERED			
63	07/30/2008	REFERENCE CAPTURE ON IDS			
62	07/30/2008	INFORMATION DISCLOSURE STATEMENT (IDS) FILED			
61	09/03/2008	DATE FORWARDED TO EXAMINER			
60	07/30/2008	AMENDMENT SUBMITTED/ENTERED WITH FILING OF CPA/RCE			
59	09/03/2008	DATE FORWARDED TO EXAMINER			
58	07/30/2008	REQUEST FOR CONTINUED EXAMINATION (RCE)			
57	09/03/2008	DISPOSAL FOR A RCE / CPA / R129			
56	07/30/2008	INFORMATION DISCLOSURE STATEMENT (IDS) FILED			
55	07/30/2008	WORKFLOW - REQUEST FOR RCE - BEGIN			
54	06/09/2008	MAIL MISCELLANEOUS COMMUNICATION TO APPLICANT			
53	06/06/2008	MISCELLANEOUS COMMUNICATION TO APPLICANT - NO ACTION COUNT			
52	03/03/2008	EXAMINER INTERVIEW SUMMARY RECORD (PTOL - 413)			
51	05/14/2008	PUBS CASE REMAND TO TC			

50	05/22/2008	WORKFLOW - QUERY REQUEST - BEGIN			
49	05/19/2008	WORKFLOW - QUERY REQUEST - BEGIN			
48	05/16/2008	SEQUENCE FORWARDED TO PUBS ON TAPE			
47	05/05/2008	EXPORT TO INITIAL DATA CAPTURE			
46	04/30/2008	MAIL EXAMINER'S AMENDMENT			
45	04/30/2008	MAIL NOTICE OF ALLOWANCE			
44	04/28/2008	NOTICE OF ALLOWANCE DATA VERIFICATION COMPLETED			
43	04/28/2008	EXAMINER'S AMENDMENT COMMUNICATION			
42	04/28/2008	NOTICE OF ALLOWABILITY			
41	03/03/2008	EXAMINER INTERVIEW SUMMARY RECORD (PTOL - 413)			
38	04/09/2008	DATE FORWARDED TO EXAMINER			
37	03/31/2008	AMENDMENT AFTER FINAL REJECTION			
36	12/31/2007	MAIL FINAL REJECTION (PTOL - 326)			
35	12/26/2007	FINAL REJECTION			
34	11/14/2007	CHANGE IN POWER OF ATTORNEY (MAY INCLUDE ASSOCIATE POA)			
33	11/09/2007	CORRESPONDENCE ADDRESS CHANGE			
32	09/24/2007	DATE FORWARDED TO EXAMINER			
31	09/14/2007	RESPONSE AFTER NON-FINAL ACTION		3	30
30	06/11/2007	MAIL NON-FINAL REJECTION			
29	06/08/2007	NON-FINAL REJECTION			
28	07/22/2004	INFORMATION DISCLOSURE STATEMENT CONSIDERED			
27	03/23/2007	INFORMATION DISCLOSURE STATEMENT CONSIDERED			
26	03/28/2007	DATE FORWARDED TO EXAMINER			
25	03/23/2007	RESPONSE TO ELECTION / RESTRICTION FILED			
24	03/23/2007	REQUEST FOR EXTENSION OF TIME - GRANTED			
23	03/23/2007	REFERENCE CAPTURE ON IDS			
22.7	03/23/2007	INFORMATION DISCLOSURE STATEMENT (IDS) FILED			
22	03/23/2007	INFORMATION DISCLOSURE STATEMENT (IDS) FILED			
21	01/18/2007	MAIL RESTRICTION REQUIREMENT	483		-1
20	01/08/2007	REQUIREMENT FOR RESTRICTION / ELECTION			
19	08/11/2006	CORRESPONDENCE ADDRESS CHANGE			

18	08/11/2006	CHANGE IN POWER OF ATTORNEY (MAY INCLUDE ASSOCIATE POA)			
17	02/15/2005	CORRESPONDENCE ADDRESS CHANGE			
16	12/08/2004	IFW TSS PROCESSING BY TECH CENTER COMPLETE			
15.7	07/22/2004	INFORMATION DISCLOSURE STATEMENT (IDS) FILED			
15	07/22/2004	INFORMATION DISCLOSURE STATEMENT (IDS) FILED			
14	12/02/2004	CASE DOCKETED TO EXAMINER IN GAU			
13	09/21/2004	APPLICATION RETURN FROM OIPE			
12	09/21/2004	APPLICATION IS NOW COMPLETE			
11	09/21/2004	APPLICATION RETURN TO OIPE			
10	09/21/2004	APPLICATION RETURN FROM OIPE			
9	09/21/2004	APPLICATION RETURN TO OIPE			
8	09/20/2004	APPLICATION DISPATCHED FROM OIPE			
7	09/21/2004	APPLICATION IS NOW COMPLETE			
6	09/08/2004	CLEARED BY OIPE CSR			
5	09/08/2004	CASE CLASSIFIED BY OIPE			
4	08/18/2004	IFW SCAN & PACR AUTO SECURITY REVIEW			
3	08/04/2004	CRF IS GOOD TECHNICALLY / ENTERED INTO DATABASE			
2	07/22/2004	CRF DISK HAS BEEN RECEIVED BY PREEXAM / GROUP / PCT			
1	07/22/2004	INITIAL EXAM TEAM NN			

Search Another: Application# [ ] Search

EXPLANATION OF PTA CALCULATION

EXPLANATION OF PTE CALCULATION

To go back, right click here and select Back. To go forward, right click here and select Forward. To refresh, right click here and select Refresh.

Back to OASIS | Home page

UNITED STATES PATENT AND TRADEMARK OFFICE

Commissioner for Patents
United States Patent and Trademark Office
P.O. Box 1450
Alexandria, VA 22313-1450
www.uspto.gov

MINTZ, LEVIN, COHN, FERRIS,
GLOVSKY AND POPEO, P.C
One Financial Center
BOSTON MA 02111

MAILED

MAR 10 2010

OFFICE OF PETITIONS

In re Application of	:	
Simpson	:	
Application No. 10/896,741	:	ON APPLICATION FOR
Filed: July 21, 2004	:	PATENT TERM ADJUSTMENT
Atty Docket No. 34668-501006US	:	

This is in response to the REQUEST FOR RECONSIDERATION OF PATENT TERM ADJUSTMENT UNDER 37 C.F.R. § 1.705(b)," filed October 30, 2009. Applicant submits that the patent term adjustment to be indicated on the patent is one thousand one hundred fifty-three (1,153) days, not seven hundred thirty-three (733) days as calculated by the Office as of the mailing of the initial determination of patent term adjustment. Applicant requests this correction on the basis that the Office will take in excess of three years to issue this patent.

In addition, applicant discloses an additional period of reduction that should be entered in patent term calculations for this application. Applicant discloses that the Office failed to consider the delay associated with the filing of a response to the September 15, 2004 Notice to File Missing Parts of Nonprovisional Application.

To the extent that applicant request reconsideration of the patent term adjustment as it relates to the Office's failure to issue the patent within 3 years of the filing date, the application for patent term adjustment under 37 CFR 1.705(b) is **DISMISSED as PREMATURE**.

Knowledge of the actual date the patent issues is required to calculate the amount, if any, of additional patent term patentees are entitled to for Office failure to issue the patent within 3 years. See § 1.702(b). This is true even where a request for continued examination (RCE) was filed. The

computer will not undertake the § 1.702(b) calculation until the actual date of issuance of the patent has been determined. Likewise, the computer will not calculate any further Office delay under § 1.702(a)(4) or applicant delay under § 1.704(c)(10) until the actual date of issuance of the patent has been determined. As such, the Office cannot make a determination on the correctness of the patent term adjustment until the patent has issued.

Requesting reconsideration of the patent term adjustment to be indicated on the patent under 37 CFR 1.705(b) based on the initial determination of patent term adjustment and a projected issuance date of the patent or even the filing date of the request for continued examination is premature. Accordingly, it is appropriate to dismiss as premature such a request.

Rather than file an application for patent term adjustment under 37 CFR 1.705(b) contesting the 37 CFR 1.702(b) calculation at the time of the mailing of the notice of allowance, applicant is advised that he may wait until the time of the issuance of the patent and file a request for reconsideration of the patent term adjustment pursuant to 37 CFR 1.705(d). As the USPTO does not calculate the amount of time earned pursuant to 37 CFR 1.702(b) until the time of the issuance of the patent, the Office will consider any request for reconsideration of the patent term adjustment due to an error in the calculation of 37 CFR 1.702(b) to be timely if the request for reconsideration is filed within two months of the issuance of the patent. However, as to all other bases for contesting the initial determination of patent term adjustment received with the notice of allowance, applicant must timely file an application for patent term adjustment prior to the payment of the issue fee[1].

To the extent that applicant otherwise requests correction of the initial determination of patent term adjustment (PTA), the application for patent term adjustment is **GRANTED**.

---

[1] For example, if applicant disputes both the calculation of patent term adjustment under 37 CFR 1.702(a)(1) for Office failure to mail a first Office action or notice of allowance not later than fourteen months after the date on which the application was filed and under 37 CFR 1.702(b) for Office failure to issue a patent within three years of the actual filing date of the application, then applicant must still timely file an application for patent term adjustment prior to the payment of the issue fee to contest the calculation of Office delay in issuing a first Office action or notice of allowance. See 37 CFR 1.705(b) and 35 U.S.C. 154(b)(3)(B). A dispute as to the calculation of the §1.702(a)(1) period raised on request for reconsideration of patent term adjustment under 37 CFR 1.705(d) will be dismissed as untimely filed.

The Office has updated the PALM screen by entering the additional period of delay. It is noted that the correct Patent Term Adjustment determination at the time of the mailing of the Notice of Allowance is six hundred and seven (607) days. A copy of the updated PALM screen, showing the correct determination, is enclosed.

On July 31, 2009, the Office mailed the Determination of Patent Term Adjustment under 35 U.S.C. 154(b) in the above-identified application. The Notice stated that the patent term adjustment is 733 days. On October 30, 2009, applicant submitted the instant request for reconsideration of patent term. Applicant discloses that the Office failed to recognize an additional period of delay.

Applicant discloses the Office failed to consider the delay associated with the filing of a response to the September 15, 2004 Notice to File Missing Parts of Nonprovisional Application (Notice). Pursuant to 37 CFR 1.704(b), a period of reduction of 126 days should have been entered. 37 CFR 1.704(b) provides that:

> With respect to the grounds for adjustment set forth in §§ 1.702(a) through (e), and in particular the ground of adjustment set forth in § 1.702(b), an applicant shall be deemed to have failed to engage in reasonable efforts to conclude processing or examination of an application for the cumulative total of any periods of time in excess of three months that are taken to reply to any notice or action by the Office making any rejection, objection, argument, or other request, measuring such three-month period from the date the notice or action was mailed or given to the applicant, in which case the period of adjustment set forth in § 1.703 shall be reduced by the number of days, if any, beginning on the day after the date that is three months after the date of mailing or transmission of the Office communication notifying the applicant of the rejection, objection, argument, or other request and ending on the date the reply was filed. The period, or shortened statutory period, for reply that is set in the Office action or notice has no effect on the three-month period set forth in this paragraph.

In this instance, applicant failed to engage in reasonable efforts to conclude processing of the application by failing to reply to the September 15, 2004 Notice within the three-month

period provided for in 37 CFR 1.704(b). Applicant did not file a complete and proper response until April 20, 2005. Accordingly, a period of reduction of 126 days is being entered for the period beginning on December 16, 2004, the day after the date that is three months after the date of mailing of the Notice, and ending on April 20, 2005, the date applicant's reply was filed.

In view thereof, the correct patent term adjustment at the time of mailing of the notice of allowance is **607** (881 days of Office delay - 274 (126+86+2+60) days of applicant delay).

The Office thanks applicant for his good faith and candor in bringing the additional periods of delay to the attention of the Office.

The Office acknowledges receipt of the $200.00 fee set forth in 37 CFR 1.18(e). No additional fees are required.

The application file does not indicate a change of address has been filed in this case, although the address given on the petition differs from the address of record. A change of address should be filed in this case in accordance with MPEP 601.03. A courtesy copy of this decision is being mailed to the address noted on the petition. However, until otherwise instructed, all future correspondence regarding this application will be mailed solely to the address of record.

Applicant is reminded that any delays by the Office pursuant to 37 CFR 1.702(a)(4) and 1.702(b) and any applicant delays under 37 CFR 1.704(c)(10) will be calculated at the time of the issuance of the patent and applicants will be notified in the Issue Notification letter that is mailed to applicant approximately three weeks prior to issuance.

The Office of Data Management has been advised of this decision. This matter is being referred to the Office of Data Management for issuance of the patent.

Telephone inquiries specific to this decision should be directed to Shirene Willis Brantley, Senior Petitions Attorney, at (571) 272-3230.

Nancy Johnson
Senior Petitions Attorney
Office of Petitions

Enclosure: Copy of REVISED PALM screen

CC: JAMES S. NOLAN
MINTZ, LEVIN, COHN, FERRIS
GLOVSKY AND POPEO. P.C.
3580 CARMEL MOUNTAIN ROAD
SUITE 300
SAN DIEGO, CA 92130

Day : Wednesday

PALM INTRANET

Date: 3/10/2010
Time: 07:35:32

PTA Calculations for Application: 10/896741			
Application Filing Date:	07/21/2004	PTO Delay (PTO):	881
Issue Date of Patent:		Three Years:	0
Pre-Issue Petitions:	0	Applicant Delay (APPL):	148
Post-Issue Petitions:	0	Total PTA (days):	607
PTO Delay Adjustment:	-126		

File Contents History

Number	Date	Contents Description	PTO	APPL	START
71	03/10/2010	ADJUSTMENT OF PTA CALCULATION BY PTO		126	
63	09/28/2009	MAIL NOTICE OF ALLOWANCE			
62	09/25/2009	ISSUE REVISION COMPLETED			
61	09/25/2009	DOCUMENT VERIFICATION			
60	09/23/2009	EXAMINER INTERVIEW SUMMARY RECORD (PTOL - 413)			
59	09/25/2009	EXAMINER'S AMENDMENT COMMUNICATION			
58	09/25/2009	NOTICE OF ALLOWANCE DATA VERIFICATION COMPLETED			
57	09/24/2009	NOTICE OF ALLOWABILITY			
53	08/19/2009	INFORMATION DISCLOSURE STATEMENT CONSIDERED			
51	08/19/2009	INFORMATION DISCLOSURE STATEMENT (IDS) FILED			
50	08/26/2009	DATE FORWARDED TO EXAMINER			
49	08/19/2009	AMENDMENT SUBMITTED/ENTERED WITH FILING OF CPA/RCE			
48	08/26/2009	DATE FORWARDED TO EXAMINER			
47	08/19/2009	REQUEST FOR CONTINUED EXAMINATION (RCE)			
46	08/26/2009	DISPOSAL FOR A RCE / CPA / R129			
45	08/19/2009	INFORMATION DISCLOSURE STATEMENT (IDS) FILED			
44	08/19/2009	WORKFLOW - REQUEST FOR RCE - BEGIN			
43	06/17/2009	MAIL FINAL REJECTION (PTOL - 326)			
42	06/16/2009	FINAL REJECTION			
41	03/30/2009	NEW OR ADDITIONAL DRAWING FILED			
40	05/07/2009	DATE FORWARDED TO EXAMINER			

39	03/30/2009	RESPONSE AFTER NON-FINAL ACTION		60	36
38	03/30/2009	REQUEST FOR EXTENSION OF TIME - GRANTED			
36	10/29/2008	MAIL NON-FINAL REJECTION			
35	10/27/2008	NON-FINAL REJECTION			
34	08/20/2008	DATE FORWARDED TO EXAMINER			
33	08/15/2008	SUPPLEMENTAL RESPONSE		2	31
32	08/20/2008	DATE FORWARDED TO EXAMINER			
31	08/13/2008	RESPONSE TO ELECTION / RESTRICTION FILED		86	29
30	08/13/2008	REQUEST FOR EXTENSION OF TIME - GRANTED			
29	02/19/2008	MAIL RESTRICTION REQUIREMENT	881		-1
28	02/14/2008	REQUIREMENT FOR RESTRICTION / ELECTION			
27	06/09/2005	INFORMATION DISCLOSURE STATEMENT CONSIDERED			
26	12/29/2005	INFORMATION DISCLOSURE STATEMENT CONSIDERED			
25	03/10/2006	INFORMATION DISCLOSURE STATEMENT CONSIDERED			
24	10/17/2007	WITHDRAW FLAGGED FOR 5/25			
23	10/15/2007	FLAGGED FOR 5/25			
22	04/06/2007	CASE DOCKETED TO EXAMINER IN GAU			
21	10/23/2006	CORRESPONDENCE ADDRESS CHANGE			
20	03/10/2006	REFERENCE CAPTURE ON IDS			
19.7	03/10/2006	INFORMATION DISCLOSURE STATEMENT (IDS) FILED			
19	03/10/2006	INFORMATION DISCLOSURE STATEMENT (IDS) FILED			
18	03/10/2006	PRELIMINARY AMENDMENT			
17.7	12/29/2005	INFORMATION DISCLOSURE STATEMENT (IDS) FILED			
17	12/29/2005	INFORMATION DISCLOSURE STATEMENT (IDS) FILED			
16	10/05/2005	IFW TSS PROCESSING BY TECH CENTER COMPLETE			
15	10/05/2005	CORRESPONDENCE ADDRESS CHANGE			
14	10/05/2005	CASE DOCKETED TO EXAMINER IN GAU			
13	06/09/2005	REFERENCE CAPTURE ON IDS			
12.7	06/09/2005	INFORMATION DISCLOSURE STATEMENT (IDS) FILED			

12	06/09/2005	INFORMATION DISCLOSURE STATEMENT (IDS) FILED			
11	05/17/2005	TRANSFER INQUIRY TO GAU			
10	05/04/2005	APPLICATION DISPATCHED FROM OIPE			
9	05/04/2005	APPLICATION IS NOW COMPLETE			
8	04/20/2005	PAYMENT OF ADDITIONAL FILING FEE/PREEXAM			
7	04/20/2005	A STATEMENT BY ONE OR MORE INVENTORS SATISFYING THE REQUIREMENT UNDER 35 USC 115, OATH OF THE APPLIC			
4	09/02/2004	CLEARED BY OIPE CSR			
3	09/02/2004	CASE CLASSIFIED BY OIPE			
2	08/10/2004	IFW SCAN & PACR AUTO SECURITY REVIEW			
1	07/21/2004	INITIAL EXAM TEAM NN			

Search Another: Application# Search

EXPLANATION OF PTA CALCULATION

EXPLANATION OF PTE CALCULATION

To go back, right click here and select Back. To go forward, right click here and select Forward. To refresh, right click here and select Refresh.

Back to OASIS | Home page

United States
Patent And
Trademark Office

P.O. Box 1450, Alexandria, Virginia 22313-1450 – www.uspto.gov

PETITION DECISION

09/24/04

Eric L. Prahl
Wilmer Cutler Pickering Hale and Dorr LLP
60 State Street
Boston, MA 02109

Dear Applicant:

The Box PG Pub replacement drawings for application number 10/896754 received on 09/01/04 by the U. S. Patent and Trademark Office will be included for patent publication.

Telephone inquiries should be directed to Kaletus King, Office of Pre-Grant Publication 703 605-4283.

Kaletus King

Signature of Reviewer, Office of Pre-Grant Publication

UNITED STATES PATENT AND TRADEMARK OFFICE

Commissioner for Patents
United States Patent and Trademark Office
P.O. Box 1450
Alexandria, VA 22313-1450
www.uspto.gov

Fish & Richardson P.C.
225 Franklin Street
Boston, MA 02110

COPY MAILED

SEP 06 2006

OFFICE OF PETITIONS

In re Application of
Chad L. Cook
Application No. 10/896,757
Filed: July 22, 2004
Attorney Docket No. 17127-003001

DECISION ON PETITION
TO WITHDRAW
FROM RECORD

This is a decision on the Request to Withdraw as attorney or agent of record under 37 C.F.R. § 1.36(b), filed March 10, 2006.

The request is **NOT APPROVED**.

A grantable request to withdraw as attorney/agent of record must be signed by every attorney/agent seeking to withdraw or contain a clear indication that one attorney is signing on behalf of another/others. A request to withdraw will not be approved unless at least 30 (thirty) days would remain between the date of approval and the later of the expiration date of a time to file a response or the expiration date of the maximum time period which can be extended under 37 C.F.R. § 1.136(a).

The Office cannot approve the request at this time since the reasons provided do not meet any of the conditions under the mandatory or permissive categories enumerated in 37 CFR 10.40. Section 10.40 of Title 37 of the Code of Federal Regulation states, "[a] practitioner shall not withdraw from employment in a proceeding before the Office without permission from the Office[.]" More specifically, 37 CFR 10.40 states, "[i]f paragraph (b) of this section is not applicable, a practitioner may not request permission to withdraw in matter pending before the Office unless such request or such withdrawal is" for one the permissive reasons listed in 37 CFR 10.40(c). The reasons set forth in the request, **the assignee failed to pay the attorney's bills after due notification and the elapse of a substantial period of time**, do not meet any of the conditions set forth in 37 CFR 10.40 because the assignee has properly intervened in accordance with 37 CFR 3.373(b).

All future communications from the Office will continue to be directed to the above-listed address until otherwise notified by applicant.

Telephone inquiries concerning this decision should be directed to Terri Williams at 571-272-2991.

David Bucci
Petitions Examiner
Office of Petitions

cc: Black Dragon Software
430 Bedford Street
Suite 100
Lexington, MA 02420

cc: David L. Smith
93 Sugarloaf Dr.
Tiburon, CA 94920-1685

cc: David L. Smith
659 Chaparral Circle
Napa, CA 94558

UNITED STATES PATENT AND TRADEMARK OFFICE

Commissioner for Patents
United States Patent and Trademark Office
P.O. Box 1450
Alexandria, VA 22313-1450
www.uspto.gov

COPY MAILED

AUG 3 1 2007

OFFICE OF PETITIONS

Fish & Richardson P.C.
225 Franklin Street
Boston, MA 02110

In re Application of	:	
Chad L. Cook	:	
Application No. 10/896,757	:	DECISION ON PETITION
Filed: July 22, 2004	:	TO WITHDRAW
Attorney Docket No. 17127-003001	:	FROM RECORD
	:	

This is a decision on the Request to Withdraw as attorney or agent of record under 37 C.F.R. § 1.36(b), filed April 2, 2007.

The request is **APPROVED**.

A grantable request to withdraw as attorney/agent of record must be signed by every attorney/agent seeking to withdraw or contain a clear indication that one attorney is signing on behalf of another/others. A request to withdraw will not be approved unless at least 30 (thirty) days would remain between the date of approval and the later of the expiration date of a time to file a response or the expiration date of the maximum time period which can be extended under 37 C.F.R. § 1.136(a).

The request was signed by Denis G. Maloney on behalf of all attorneys of record. All attorneys/agents have been withdrawn. Applicant is reminded that there is no attorney of record at this time.

All future correspondence will be directed to the first named inventor Chad L. Cook at the address indicated below.

There is no outstanding Office action at this time.

Telephone inquiries concerning this decision should be directed to Terri Williams at 571-272-2991.

T. Williams

Terri Williams
Petitions Examiner
Office of Petitions

cc: **Chad L. Cook**
165 Sheldonville Road
North Attleborough, MA 02760

cc: **David L. Smith**
93 Sugarloaf Dr.
Tiburon, CA 94920-1685

cc: **David L. Smith**
659 Chaparral Circle
Napa, CA 94558

UNITED STATES PATENT AND TRADEMARK OFFICE

UNITED STATES DEPARTMENT OF COMMERCE
United States Patent and Trademark Office
Address: COMMISSIONER FOR PATENTS
P.O. Box 1450
Alexandria, Virginia 22313-1450
www.uspto.gov

APPLICATION NUMBER	FILING OR 371 (c) DATE	FIRST NAMED APPLICANT	ATTY. DOCKET NO./TITLE
10/896,757	07/22/2004	Chad L. Cook	17127-003001

CONFIRMATION NO. 8530

OC000000025608783

Fish & Richardson P.C.
225 Franklin Street
Boston, MA 02110

Date Mailed: 08/29/2007

NOTICE REGARDING CHANGE OF POWER OF ATTORNEY

This is in response to the Power of Attorney filed 04/02/2007.

- The withdrawal as attorney in this application has been accepted. Future correspondence will be mailed to the new address of record. 37 CFR 1.33.

J. Williams

Office of Initial Patent Examination (571) 272-4000, or 1-800-PTO-9199

FORMER ATTORNEY/AGENT COPY

UNITED STATES PATENT AND TRADEMARK OFFICE

COMMISSIONER FOR PATENTS
UNITED STATES PATENT AND TRADEMARK OFFICE
P.O. BOX 1450
ALEXANDRIA, VA 22313-1450
WWW.USPTO.GOV

Paper No. None

Maginot, Moore & Beck
Bank One Tower
Suite 3000
111 Monument Circle
Indianapolis IN 46204

COPY MAILED

FEB 17 2005

OFFICE OF PETITIONS

In re Application of Walter Stoll Application No. 10/896,765 Filed: July 21, 2004 Attorney Docket No. 1867-0064 Title: ARRANGEMENT FOR THE OPERATION OF FIELD DEVICES OF AN ADMINISTRATION AND MAINTENANCE UNIT OF A BUILDING	:	DECISION ON PETITION UNDER 37 C.F.R. §1.10(D)

This is a decision on the petition under 37 C.F.R. §1.10(d), filed January 14, 2005, requesting that application number 10/896,765 be accorded a filing date of July 21, 2004.

The application was deposited on July 23, 2004. On September 22, 2004, a filing receipt was mailed by the Office, which indicated that the application had received a filing date of July 22, 2004.

With the instant petition, Petitioner has alleged that the application was deposited on July 21, 2004, and the incorrect date was written on the Express Mail label. With his petition, Petitioner has included a copy of express mail label EV390950353US[1] bearing a date-in that is illegible[2], a declaration of facts, and a memorandum from an attorney of record.

1 It is noted that this same Express Mail number appears on the Patent Application Transmittal Letter which was included on filing.
2 On the second page of his petition, Petitioner has stated over his registration number that the express mail label bears a "date-in" designation of July 22, 2004.

A check of the Office's USPS Express Mail Finder Database computer program was inconclusive. A check of the United States Postal Service's website (http://www.usps.com/shipping/trackandconfirm.htm) was also inconclusive, in that it stated that the information pertaining to this Express Mail label number is stored off-line. A copy of the latter search result is enclosed.

The memorandum sets forth that the instant application was deposited with the USPS, along with the above-indicated express mail label. The memorandum is signed by Petitioner, and is dated July 22, 2004, and is represented by the same to be evidence which came into being after deposit and within one business day of the deposit of the correspondence in the "Express Mail Post Office to Addressee" service of the USPS, pursuant to 37 C.F.R. §1.10(d)(3).

Although the application received a filing date of July 22, 2004, the evidence is convincing that the application papers were filed on July 21, 2004, and the Patent Office assigned the incorrect date to the application. Therefore, the application was entitled to a filing date of July 21, 2004.

Accordingly, the petition is **GRANTED**. The application file is being returned to the Office of Initial Patent Examination for further processing with a filing date of July 21, 2004, as well as the mailing of a corrected filing receipt.

The general phone number for the Office of Petitions which should be used for status requests is (571) 272-3282. Telephone inquiries regarding this decision should be directed to the undersigned at (571) 272-3225.

Paul Shanoski
Senior Attorney
Office of Petitions
United States Patent and Trademark Office

Encl.

UNITED STATES PATENT AND TRADEMARK OFFICE

COMMISSIONER FOR PATENTS
UNITED STATES PATENT AND TRADEMARK OFFICE
P.O. BOX 1450
ALEXANDRIA, VA 22313-1450
www.uspto.gov

BURR & BROWN
PO BOX 7068
SYRACUSE NY 13261-7068

COPY MAILED
MAY 3 1 2006
OFFICE OF PETITIONS

Applicant: Takeuchi et al.
Appl. No.: 10/896,769
Filing Date: July 22, 2004
Title: ACTUATOR DEVICE
Attorney Docket No.: 789_132
Pub. No.: US 2005/0082946 A1
Pub. Date: April 21, 2005

This is a decision on the request for a corrected patent application publication under 37 CFR 1.221, received on March 15, 2006, for the above-identified application.

The request is DISMISSED.

The instant request is that the application be republished because the patent application publication contains the contents of another application that was submitted as part of an information disclosure statement.

37 CFR 1.221 (b) is applicable "only when the Office makes a material mistake which is apparent from Office records.... Any request for a corrected publication or revised patent application publication other than provided as provided in paragraph (a) of this section must be filed within two months from the date of the patent application publication. This period is not extendable." A material mistake must affect the public's ability to appreciate the technical disclosure of the patent application publication, to determine the scope of the patent application publication, or to determine the scope of the provisional rights that an applicant may seek to enforce upon issuance of a patent. [1]

The request for corrected publication received on March 15, 2006, was not timely filed under 37 CFR 1.221(b).

Due to the nature of the errors in this publication, the office will *sua sponte* publish a corrected patent application publication. The corrected patent application publication will be published in due course, unless the application is allowed and the patent issues before the application is republished.

[1] Changes to Implement Eighteen-Month Publication of Patent Applications, 65 FR 57023, 57038 (Sept. 20, 2000), 1239, Off. Gaz. Pat. Office Notices 63, 75 (Oct. 10, 2000) (final rule).

The documents scanned on December 6, 2004, which were improperly indexed as specification, claims and drawings and published have been relabeled as a non-patent literature.

Applicant is reminded that paper copies of pending U.S. Patent Applications are not required for compliance with 37 CFR 1.98. See Waiver of the Copy Requirement in 37 CFR 1.98 for Cited Pending U.S. Patent Applications, 1287, Off. Gaz. Pat. Office Notices 163 (Oct. 19, 2004). The Office had provided a waiver for the former requirement in Sec. 1.98(a)(2)(i) for a copy of each cited U.S. patent or U.S. patent application publication in IDSs submitted in U.S. national patent applications filed after June 30, 2003, and international applications that have entered the national stage under 35 U.S.C. 371 after June 30, 2003, because these applications are stored in electronic form in the Office's IFW system. See Information Disclosure Statements May Be Filed Without Copies of U.S. Patents and Published applications in Patent Applications filed after June 30, 2003, 1273 Off. Gaz. Pat. 55 (Aug. 5, 2003).

Inquiries relating to this matter may be directed to Mark Polutta at (571) 272-7709 (voice).

Mark O. Polutta
Office of Patent Legal Administration
Office of the Deputy Commissioner
for Patent Examination Policy

UNITED STATES PATENT AND TRADEMARK OFFICE

Commissioner for Patents
United States Patent and Trademark Office
P.O. Box 1450
Alexandria, VA 22313-1450
www.uspto.gov

WOOD, PHILLIPS, KATZ, CLARK & MORTIMER
500 W. MADISON STREET
SUITE 3800
CHICAGO, IL 60661

COPY MAILED

APR 0 6 2005

OFFICE OF PETITIONS

In re Application of:	
Steffen et al.	
Application No. 10/896,789	DECISION DISMISSING
Filed: July 22, 2004	PETITION UNDER
Title of Invention: UNITIZED COVER AND TRANSFER LAYER AND PROCESS FOR MAKING THE SAME	37 CFR 1.47(a)

This is in response to the Petition for Extension of Time, Partial Response to Formalities Letter, and Petition for Status Under 37 CFR § 1.47(a), to allow the other inventor to proceed with the application on behalf of himself or herself and the nonsigning inventor.

The petition is **dismissed**.

Rule 47 applicant is given TWO (2) MONTHS from the mailing date of this decision to reply, correcting the below-noted deficiencies. Any reply should be entitled "Request for Reconsideration of Petition Under 37 CFR 1.47(a)"; should only address the deficiencies noted below, except that the reply may include an oath or declaration executed by the non-signing inventor, and be addressed Attorney Derek L. Woods. Failure to respond will result in abandonment of the application. Any extensions of time will be governed by 37 CFR 1.136(a).

The above-identified application was filed on July 22, 2004, without, *inter alia*, a fully executed oath or declaration. The Office mailed a Notice to File Missing Parts of Nonprovisional Application (hereinafter "Notice"), on October 1, 2004, requiring *inter alia*, a properly signed oath or declaration.

In response to the Notice, Applicant files the instant petition wherein Applicant assertion that, upon information and belief, the application papers were sent, by the assignee of the above-identified application, to the nonsigning inventor, and that the application papers were returned to the nonsigning inventor as having been sent to an incorrect address.

Applicable Law

A grantable petition under 37 CFR 1.47(a) requires: (1) proof that the non-signing inventor cannot be reached or refuses to sign the oath or declaration after having been presented with the application papers (specification, claims and drawings); (2) an acceptable oath or declaration in compliance with 35 U.S.C. §§ 115 and 116; (3) the petition fee; and (4) a statement of the last known address of the non-signing inventor. Applicant lacks item (1) set forth above.

As to item (1), if an inventor is unavailable (cannot be reached), while it is not required that the application be mailed, Petitioner must establish the exercise of diligent effort in trying to find or reach the nonsigning inventor. Where inability to find or reach a nonsigning inventor "after diligent effort" is the reason for filing under 37 CFR 1.47, a statement of facts should be submitted that fully describes the exact facts which are relied on to establish that a diligent effort was made. The statement of facts must be signed, where at all possible, by a person having firsthand knowledge of the facts recited therein. Statements based on hearsay will not normally be accepted. Copies of documentary evidence such as internet searches, certified mail return receipts, cover letters of instructions, telegrams, that support a finding that the nonsigning inventor could not be found or reached should be made part of the statement. The steps taken to locate the whereabouts of the nonsigning inventor should be included statement of facts. It is important that the statement contain facts as opposed to conclusions. (Emphasis supplied). See, MPEP § 409.03(d).

At the very least, an Internet search, or a search of telephone directories should be undertaken of the regions where it is suspected the non-signing inventor may reside. Copies of the results of such searches must be referred to in any renewed petition. It is important that the forthcoming communication contain statements of fact as opposed to conclusions, and be signed by a person having firsthand knowledge of the facts recited therein.

Finally, applicant is advised that the fee for a petition under 37 CFR 1.47 has increased, effective December 8, 2004, to $200.00. Applicant's deposit account has been charged an additional $70.00 for the petition fee.

Further correspondence with respect to this matter should be addressed as follows:

By mail: Commissioner for Patents
PO Box 1450
Alexandria, VA 22313-1450

By FAX: (703) 872-9306
Attn: Office of Petitions

By hand: Customer Service Window
Randolph Building
401 Dulany Street
Alexandria, VA 22314

Telephone inquiries concerning this decision should be directed to the undersigned at (571) 272-3232.

Derek L. Woods
Attorney/Advisor
Office of Petitions

UNITED STATES PATENT AND TRADEMARK OFFICE

COMMISSIONER FOR PATENTS
UNITED STATES PATENT AND TRADEMARK OFFICE
P.O. BOX 1450
ALEXANDRIA, VA 22313-1450
www.uspto.gov

WOOD, PHILLIPS, KATZ, CLARK & MORTIMER
500 W. MADISON STREET
SUITE 3800
CHICAGO, IL 60661

COPY MAILED

JUL 01 2005

OFFICE OF PETITIONS

In re Application of:	:	
Steffen et al.	:	
Application No. 10/896,789	:	DECISION GRANTING
Filed: July 22, 2004	:	PETITION UNDER
Title of Invention: UNITIZED COVER	:	37 CFR 1.47(a)
AND TRANSFER LAYER AND PROCESS FOR	:	
MAKING THE SAME	:	

This decision is in response to the Request for Reconsideration of Petition Under 37 CFR 1.47(a), filed June 2, 2005, to allow the other inventor(s) to proceed with the application on behalf of himself or herself and the nonsigning inventor(s).

The petition is **granted**.

The above-identified application and papers have been reviewed and found in compliance with 37 CFR 1.47(a). This application is hereby accorded Rule 1.47(a) status.

Petitioner has shown that the non-signing inventor, Lisa Baker, refuses to join in the application.

As provided in Rule 1.47(a), this Office will forward notice of this application's filing to the non-signing inventor at the addresses given in the Petition. Notice of the filing of this application will also be published in the Official Gazette.

The application file is being referred to the Office of Initial Patent Examination for continued processing.

Telephone inquiries related to this decision may be directed to the undersigned at (571) 272-3232.

Derek L. Woods
Petition Attorney
Office of Petitions

UNITED STATES PATENT AND TRADEMARK OFFICE

COMMISSIONER FOR PATENTS
UNITED STATES PATENT AND TRADEMARK OFFICE
P.O. BOX 1450
ALEXANDRIA, VA 22313-1450
www.uspto.gov

LISA BAKER
436 FRONTIER DRIVE
LEXINGTON, NC 27292

In re Application of: :
Steffen et al. :
Application No. 10/896,789 :
Filed: July 22, 2004 :
Title of Invention: UNITIZED COVER :
AND TRANSFER LAYER AND PROCESS FOR :
MAKING THE SAME :

LETTER COPY MAILED
JUL 01 2005
OFFICE OF PETITIONS

Dear Ms. Baker:

You are named as a joint inventor in the above-identified United States patent application filed under the provisions of 35 U.S.C. 116 (United States Code) and 37 CFR 1.47(a), Rules of Practice in Patent Cases. Should a patent be granted on the application you will be designated therein as a joint inventor.

As a named inventor you are entitled to inspect any paper in the file wrapper of the application, order copies of all or any part thereof (at a prepaid cost per 37 CFR 1.19) or make your position of record in the application. Alternatively, you may arrange to do any of the preceding through a registered patent attorney or agent presenting written authorization from you. If you care to join the application, counsel of record (see below) would presumably assist you. Joining in the application would entail the filing of an appropriate oath or declaration by you pursuant to 37 CFR 1.63.

Telephone inquiries regarding this communication should be directed to the undersigned at (571) 272-3232. Requests for information regarding your application should be directed to the File Information Unit at (703) 308-2733. Information regarding how to pay for and order a copy of the application, or a specific paper in the application, should be directed to Certification Division at (703) 308-9726 or 1-800-972-6382 (outside the Washington D.C. area).

Derek L. Woods
Attorney
Office of Petitions

cc: WOOD, PHILLIPS, KATZ,
CLARK & MORTIMER
500 W. MADISON STREET
SUITE 3800
CHICAGO, IL 60661

UNITED STATES PATENT and TRADEMARK OFFICE

Commissioner for Patents
United States Patent and Trademark Office
P.O. Box 1450
Alexandria, VA 22313-1450
WWW.USPTO.GOV

Mailed: 4-20-06

DWW

In re Application of C. Edward Baxter, Jr. et al.
Serial No.: 10/896,792
Filed: July 22, 2004

DECISION ON PETITION UNDER *37 CFR 1.48(a)*

Title: ADDUCTS OF MID-RANGE VINYLIDNE CONTENT POLYISOBUTYLENE POLYMER PRODUCTS AND METHODS FOR MAKE THE SAME

This is a decision on the REQUEST FOR CORRECT INVENTORSHIP IN A NON-PROVISIONAL PATENT APPLICATION filed February 13, 2006 to correct inventorship under 35 USC § 116 by adding the name of Christopher Lobue, Gilbert Valdez, Daniel Herndon and Timothy Lowry to the list of inventors of the instant application.

It is noted that the applicant has met the requirements of 37 C.F.R. § 1.48(a) by (1) submitting a request to correct the inventorship that sets forth the desired inventorship change; (2) providing a statement from each person being added as an inventor that the error in inventorship occurred without deceptive intention on his or her part; (3) providing a declaration of the actual inventors as required by 37 C.F.R. § 1.63; (4) providing the processing fee set forth in 1.17(i); and, (5) providing the written consent of the assignee.

The request is **GRANTED**.

The application file is being forwarded to the appropriate section of the Patent and Trademark Office for correction of the record.

David Wu
Supervisory Patent Examiner
Art Unit 1713
Technology Center 1700

STINSON MORRISON HECKER LLP
1201 Walnut Street
Kansas City, MO 64106-2150

UNITED STATES PATENT AND TRADEMARK OFFICE

UNITED STATES DEPARTMENT OF COMMERCE
United States Patent and Trademark Office
Address: COMMISSIONER FOR PATENTS
P.O. Box 1450
Alexandria, Virginia 22313-1450
www.uspto.gov

WESTMAN CHAMPLIN & KELLY, P.A.
SUITE 1400
900 SECOND AVENUE SOUTH
MINNEAPOLIS, MN 55402

Mail Date: 04/21/2010

Applicant	: J. David Vonderhaar	: DECISION ON REQUEST FOR
Patent Number	: 7656162	: RECALCULATION of PATENT
Issue Date	: 02/02/2010	: TERM ADJUSTMENT IN VIEW
Appliction No	: 10/896,834	: OF WYETH AND NOTICE OF INTENT TO
Filed	: 07/22/2004	: ISSUE CERTIFICATE OF CORRECTION
		:

The Request for Recalculation is **GRANTED** to the extent indicated.

The patent term adjustment has been determined to be **902** days. The USPTO will *sua sponte* issue a certificate of correction reflecting the amount of PTA days determined by the recalculation.

Prior to the issuance of the certificate of correction, the USPTO will afford patentee an opportunity to be heard and request reconsideration. Accordingly, patentee has **one month or thirty (30) days**, whichever is longer, to file a request for reconsideration of this patent term adjustment calculation. See 35 U.S.C. 154(b)(3)(B)(ii) and 37 CFR 1.322(a)(4). No extensions of time will be granted under 37 CFR 1.136.

Patentee should use document code PET.OP if electronically filing a request for reconsideration of this patent term adjustment calculation. The patentee must also include the information required by 37 CFR 1.705(b)(2) and the fee required by 37 CFR 1.18(e). If patentee does not file a timely request for reconsideration of this patent term adjustment calculation including the information required by 37 CFR 1.705(b)(2) and the fee required by 37 CFR 1.18(e), the USPTO will issue a certificate of correction reflecting the PTA determination noted above.

Patentee should be aware that in order to preserve the right to review in the United States District Court for the District of Columbia of the USPTO patent term adjustment determination, patentee must ensure that he or she also take the steps required under 35 U.S.C. 154(b)(4)(A) in a timely manner. Nothing in the request for recalculation should be construed as providing an alternative time frame for commencing a civil action under 35 U.S.C. 154(b)(4)(A).

Any questions concerning this decision should be directed to the Office of Patent Legal Administration at 571-272-7702.

UNITED STATES PATENT AND TRADEMARK OFFICE

Commissioner for Patents
United States Patent and Trademark Office
P.O. Box 1450
Alexandria, VA 22313-1450
www.uspto.gov

STAAS & HALSEY LLP
SUITE 700
1201 NEW YORK AVENUE, N.W.
WASHINGTON, DC 20005

COPY MAILED

JUN 11 2008

OFFICE OF PETITIONS

In re Application of :
Ryuichi Matsukura et al :
Application No. 10/896,881 :
Filed: July 23, 2004 :
Attorney Docket No. 1405.1085

ON PETITION

This is a decision on the petition, filed June 3, 2008 under 37 CFR 1.313(c)(2) to withdraw the above-identified application from issue after payment of the issue fee.

The petition is **GRANTED**.

The above-identified application is withdrawn from issue for consideration of a submission under 37 CFR 1.114 (request for continued examination). See 37 CFR 1.313(c)(2).

Petitioner is advised that the issue fee paid on May 28, 2008 in the above-identified application cannot be refunded. If, however, the above-identified application is again allowed, petitioner may request that it be applied towards the issue fee required by the new Notice of Allowance.[1]

Telephone inquiries should be directed to Irvin Dingle at (571) 272-3210.

This matter is being referred to Technology Center AU 2617 for processing of the request for continued examination under 37 CFR 1.114 and for consideration of the concurrently filed Information Disclosure Statement.

Irvin Dingle
Petitions Examiner
Office of Petitions

---

[1] The request to apply the issue fee to the new Notice may be satisfied by completing and returning the new Issue Fee Transmittal Form PTOL-85(b), which includes the following language thereon: Commissioner for Patents is requested to apply the Issue Fee and Publication Fee (if any) or re-apply any previously paid issue fee to the application identified above. Petitioner is advised that, whether a fee is indicated as being due or not, the Issue Fee Transmittal Form **must** be completed and timely submitted to avoid abandonment. Note the language in bold text on the first page of the Notice of Allowance and Fee(s) Due (PTOL-85).

UNITED STATES PATENT AND TRADEMARK OFFICE

Commissioner for Patents
United States Patent and Trademark Office
P.O. Box 1450
Alexandria, VA 22313-1450
www.uspto.gov

DEPARTMENT OF THE ARMY
CECOM LEGAL OFFICE, FORT BELVOIR
AMSEL-LG-BELV
10235 BURBECK ROAD
FORT BELVOIR, VA 22060-5806

COPY MAILED

DEC 06 2006

OFFICE OF PETITIONS

In re Application of	:	
Kyle R. Bryant et al	:	
Application No. 10/896,958	:	DECISION GRANTING PETITION
Filed: July 23, 2004	:	UNDER 37 CFR 1.137(b)
Attorney Docket No. NVL 3235	:	

This is a decision on the petition under 37 CFR 1.137(b), filed May 11, 2006, to revive the above-identified application.

The petition is **GRANTED**.

The above-identified application became abandoned for failure to reply in a timely manner to the non-final Office action mailed August 31, 2005, which set a shortened statutory period for reply of three (3) months. No extensions of time under the provisions of 37 CFR 1.136(a) were obtained. Accordingly, the above-identified application became abandoned on December 1, 2005.

The petition satisfies the conditions for revival pursuant to the provisions of 37 CFR 1.137(b) in that (1) the reply, (2) the $1,500 petition fee, and (3) the required statement of unintentional delay have been received. Accordingly, the reply to the non-final Office action of August 31, 2005 is accepted as having been unintentionally delayed.

Telephone inquiries concerning this decision should be directed to the undersigned at (571) 272-3218.

This matter is being referred to Technology Center AU 2873 for appropriate action in the normal course of business on the reply received May 11, 2006.

Frances Hicks
Petitions Examiner
Office of Petitions

UNITED STATES PATENT AND TRADEMARK OFFICE

Commissioner for Patents
United States Patent and Trademark Office
P.O. Box 1450
Alexandria, VA 22313-1450
www.uspto.gov

COPY MAILED
JUN 05 2006
OFFICE OF PETITIONS

OLIFF & BERRIDGE, PLC
P.O. BOX 19928
ALEXANDRIA, VA 22320

In re Application of :
Hirofumi Yamazaki et al :
Application No. 10/896,978 : ON PETITION
Filed: July 23, 2004 :
Attorney Docket No. 120517

This is a decision on the petition filed, June 2, 2006 under 37 CFR 1.313(c)(2) to withdraw the above-identified application from issue after payment of the issue fee.

The petition is **GRANTED**.

The above-identified application is withdrawn from issue for consideration of a submission under 37 CFR 1.114 (request for continued examination). See 37 CFR 1.313(c)(2).

Petitioner is advised that the issue fee paid on May 23, 2006 in the above-identified application cannot be refunded. If, however, the above-identified application is again allowed, petitioner may request that it be applied towards the issue fee required by the new Notice of Allowance.[1]

Telephone inquiries should be directed to Irvin Dingle at (571) 272-3210.

This matter is being referred to Technology Center AU 2851 for processing of the request for continued examination under 37 CFR 1.114 and for consideration of the concurrently filed Information Disclosure Statement.

Irvin Dingle
Petitions Examiner
Office of Petitions

---

[1] The request to apply the issue fee to the new Notice may be satisfied by completing and returning the new Issue Fee Transmittal Form PTOL-85(b), which includes the following language thereon: Commissioner for Patents is requested to apply the Issue Fee and Publication Fee (if any) or re-apply any previously paid issue fee to the application identified above. Petitioner is advised that, whether a fee is indicated as being due or not, the Issue Fee Transmittal Form **must** be completed and timely submitted to avoid abandonment. Note the language in bold text on the first page of the Notice of Allowance and Fee(s) Due (PTOL-85).

UNITED STATES PATENT AND TRADEMARK OFFICE

Commissioner for Patents
United States Patent and Trademark Office
P.O. Box 1450
Alexandria, VA 22313-1450
www.uspto.gov
DIW Jan-06

ROSENBERG, KLEIN & LEE
3458 ELLICOTT CENTER DRIVE-SUITE 101
ELLICOTT CITY MD 21043

COPY MAILED

JAN 09 2006

OFFICE OF PETITIONS

In re Application of	:	
Wu et al.	:	
Application No. 10/896,982	:	DECISION ON PETITION
Filed: 23 July, 2004	:	
Atty Docket No. MR1683-565	:	

This is a decision on the petition filed on 18 August, 2005, under 37 CFR 1.137(b),[1] to revive the above-identified application.

The petition is **GRANTED**.

The application became abandoned on 23 November, 2004, for failure to timely reply to the Notice to File Missing Parts of Nonprovisional Application mailed on 22 September, 2004, which set a two (2) month shortened period for reply. No extensions of time in accordance with 37 CFR 1.136(a) were obtained. Notice of Abandonment was mailed on 9 June, 2005.

Petitioner has submitted an English translation of the specification and claims, a statement that the translation is

---

[1] Effective December 1, 1997, the provisions of 37 CFR 1.137(b) now provide that where the delay in reply was unintentional, a petition may be filed to revive an abandoned application or a lapsed patent pursuant to 37 CFR 1.137(b). A grantable petition filed under the provisions of 37 CFR 1.137(b) must be accompanied by:

(1) the required reply, unless previously filed. In a nonprovisional application abandoned for failure to prosecute, the required reply may be met by the filing of a continuing application. In a nonprovisional utility or plant application filed on or after June 8, 1995, and abandoned for failure to prosecute, the required reply may also be met by the filing of a request for continuing examination in compliance with § 1.114. In an application or patent, abandoned or lapsed for failure to pay the issue fee or any portion thereof, the required reply must be the payment of the issue fee or any outstanding balance thereof. In an application, abandoned for failure to pay the publication fee, the required reply must include payment of the publication fee.

(2) the petition fee as set forth in 37 CFR 1.17(m);

(3) a statement that the entire delay in filing the required reply from the due date for the reply until the filing of a grantable petition pursuant to 37 CFR 1.137(b) was unintentional. The Commissioner may required additional information where there is a question whether the delay was unintentional; and

(4) any terminal disclaimer (and fee as set forth in 37 CFR 1.20(d)) required pursuant to 37 CFR 1.137(c)).

accurate, and replacement drawings filed in accordance with 37 CFR 1.84 and 1.121.

This application is being referred to the Office of Initial Patent Examination for further processing.

Telephone inquiries concerning this matter may be directed to the undersigned at (571) 272-3231.

D Wood

Douglas I. Wood
Senior Petitions Attorney
Office of Petitions

UNITED STATES PATENT AND TRADEMARK OFFICE

Commissioner for Patents
United States Patent and Trademark Office
P.O. Box 1450
Alexandria, VA 22313-1450
www.uspto.gov

C. IRVIN MCCLELLAND
OBLON, SPIVAK, MCCLELLAND,
MAIER & NEUSTADT, P.C.
1940 DUKE STREET
ALEXANDRIA VA 22314

COPY MAILED

SEP 25 2006

OFFICE OF PETITIONS

In re Patent No. 7,057,322

Issue Date: June 6, 2006

Application No. 10/897,009

Filed: July 23, 2004

Attorney Docket No. 256251US3X

ON PETITION

This is a decision on the petition filed June 2, 2006, which is being treated as a request under 37 CFR 3.81(b)[1] to correct the assignee on the front page of the above-identified patent by way of a Certificate of Correction.

The request is **granted**.

Telephone inquiries concerning this matter may be directed to the undersigned at (571) 272-3222. Any questions concerning the issuance of the Certificate of Correction should be directed to the Certificate of Correction Branch at (703) 305-8309.

The file is being forwarded to the Certificate of Correction Branch for issuance of the requested Certificate of Correction.

Kenya A. McLaughlin
Petitions Attorney
Office of Petitions

[1] See *Official Gazette* of June 22, 2004.

UNITED STATES PATENT AND TRADEMARK OFFICE

Commissioner for Patents
United States Patent and Trademark Office
P.O. Box 1450
Alexandria, VA 22313-1450
www.uspto.gov

FOLEY AND LARDNER LLP
SUITE 500
3000 K STREET NW
WASHINGTON, DC 20007

COPY MAILED

JUN 18 2007

OFFICE OF PETITIONS

In re Application of	:	
MURDIN, Andrew D. et al.	:	
Application No. 10/897,019	:	DECISION ON PETITION
Filed: July 23, 2004	:	TO WITHDRAW
Attorney Docket No. **77813-80D /slr**	:	FROM RECORD
	:	

This is a decision on the Request to Withdraw as attorney or agent of record under 37 C.F.R. § 1.36(b), filed March 30, 2007.

The request is **NOT APPROVED** as moot.

A review of the file record indicates that the power of attorney to FOLEY AND LARDNER LLP has been revoked by the assignee of the patent application on March 20, 2007. Accordingly, the request to withdraw under 37 C.F.R. § 1.36(b) is moot.

All future communications from the Office will continue to be directed to the below-listed address until otherwise notified by applicant.

Telephone inquires concerning this decision should be directed to Tredelle Jackson at 571-272-2783.

Monica A. Graves
Petitions Examiner
Office of Petitions

cc: **SMART & BIGGAR**
P.O. BOX 2999, STATION D
900-55 METCALFE STREET
OTTAWA ON K1P5Y-6 CA CANADA

UNITED STATES PATENT AND TRADEMARK OFFICE

Commissioner for Patents
United States Patent and Trademark Office
P.O. Box 1450
Alexandria, VA 22313-1450
www.uspto.gov

Patent No. : 7,369,181 B2
Serial No. : 10/897,019
Inventor(s) : Kang et al.
Issued : March 6, 2008
Title : **METHOD OF REMOVING NOISE FROM DIGITAL MOVING PICTURE DATA**
Docket No. : **8021-265 (SS-20420-US)**
Re: Request for Reconsideration

Consideration has been given your request for the issuance of a certificate of correction for the above-identified patent under the provisions of 37 CFR 1.322 and/or 1.323.

A petition under 37 CFR 3.81 must be filed and granted to fulfill your request, to date, there is no petition on record to consider your request to add Assignee.

Furthermore, Assignees' and/ or Co-assignees' names and addresses (assignment data) printed in a patent are based *solely* on information supplied in the appropriate space for identifying the assignment data, i.e., item 3 of the Fee(s) Transmittal Form PTOL-85B. After payment of the issue fee, correction of assignment data submitted on the PTOL-85B can only be done by Certificate of Correction under 37 CFR 1.323, which requires petition under 37 CFR 3.81(b).

A request for a patent to be corrected to state the name of the assignee must:

A. state that the assignment was submitted for recordation as set forth in 37 CFR 3.11 before issuance of the patent;
B. include a request for a certificate of correction under 37 CFR 1.323 along with the fee set forth in 37 CFR 1.20(a); and
C. include the processing fee set forth in 37 CFR 1.17(i).

If the request is granted, Certificates of Correction Branch will be notified that a Certificate of Correction may be issued.

See Manual of Patent Examining Procedure, Section 1481.01 (Rev. 3) (Oct. 2005).

Applicant has not included items B and or C above, accordingly, the request for Certificate of Correction to add or change the assignee data is dismissed.
Any request under 37 CFR 3.81(b) should be directed to the following address or facsimile number:

By mail: Mail Stop PETITIONS
Commissioner for Patents
Post Office Box 1450
Alexandria, VA 22313-1450

By hand: Customer Service Window
Mail Stop Petitions
Randolph Building
401 Dulany Street
Alexandria, VA 22314

By fax: 571-273-8300 ATTN: Office of Petitions

If, the petition under 37 CFR 1.182 (required fee currently $130), is filed and granted, the patentee would be entitled to a certificate of correction under 37 CFR 1.323 (required fee currently $100), which has been received.

Ernest C. White, *LIE*
For Mary F. Diggs (703) 308-9390 x 125
Decisions & Certificates
of Correction Branch
(703) **308-9390 x 122**

F. CHAU & ASSOCIATES, LLC
130 WOODBURY ROAD
WOODBURY NY 11797

ecw

UNITED STATES PATENT AND TRADEMARK OFFICE

Commissioner for Patents
United States Patent and Trademark Office
P.O. Box 1450
Alexandria, VA 22313-1450
www.uspto.gov

LEYDIG VOIT & MAYER, LTD
700 THIRTEENTH ST. NW
SUITE 300
WASHINGTON DC 20005-3960

COPY MAILED

JUN 06 2007

OFFICE OF PETITIONS

ON PETITION

In re Patent No. 7,054,550	:	
Application No. 10/897,038	:	
Filed: July 23, 2004	:	
Issued: May 30, 2006	:	
Attorney Docket No. 403151	:	

This is a decision on the petition filed July 26, 2006, which is being treated as a request under 37 CFR 3.81(b)[1] to correct the name of the assignee on the front page of the above-identified patent by way of a Certificate of Correction.

The request is **GRANTED**.

This matter is being forwarded to the Certificates of Correction Branch for issuance of the requested Certificate of Correction.

Telephone inquiries concerning this decision may be directed to Petitions Examiner Liana Walsh at (571) 272-3206. Inquiries regarding the issuance of a certificate of correction should be directed to the Certificate of Correction Branch at (571) 272-4200.

LWalsh for
Frances Hicks
Petitions Examiner
Office of Petitions

[1] *See* MPEP 1309, subsection II; and Official Gazette of June 22, 2004.

UNITED STATES PATENT AND TRADEMARK OFFICE

Commissioner for Patents
United States Patent and Trademark Office
P.O. Box 1450
Alexandria, VA 22313-1450
www.uspto.gov

FENWICK & WEST, LLP
SILICON VALLEY CENTER
801 CALIFORNIA STREET
MOUNTAIN VIEW, CA 94041

COPY MAILED

MAR 1 1 2008

OFFICE OF PETITIONS

In re Application of	:	
Michael Wright, et al.	:	
Application No. 10/897,060	:	DECISION ON PETITION
Filed: July 21, 2004	:	TO WITHDRAW
Attorney Docket No. 23569-10474	:	FROM RECORD
	:	

This is a decision on the Request to Withdraw as attorney or agent of record under 37 C.F.R. § 1.36(b) filed September 11, 2007.

The request is **APPROVED**.

A grantable request to withdraw as attorney/agent of record must be signed by every attorney/agent seeking to withdraw or contain a clear indication that one attorney is signing on behalf of another/others. A request to withdraw will not be approved unless at least 30 (thirty) days would remain between the date of approval and the later of the expiration date of a time to file a response or the expiration date of the maximum time period which can be extended under 37 C.F.R. § 1.136(a).

The request was signed by Brenda M. Simon on behalf of all attorneys of record who are associated with customer No. 00758.

All attorneys/agents associated with the Customer Number 00758 have been withdrawn.

Applicant is reminded that there is no attorney of record at this time.

The request to change the correspondence of record is not acceptable as the requested correspondence address is not that of: (1) the first named signing inventor; or (2) an intervening assignee of the entire interest under 37 C.F.R 3.71. All future communications from the Office will be directed to the first named signing inventor at the first copied address below until otherwise properly notified by the applicant.

In order to request or take action in a patent matter, the assignee must establish its ownership of the patent to the satisfaction of the Director. In this regard, a Statement under 37 CFR 3.73(b) must have either: (i) documentary evidence of a chain of title from the original owner to the assignee (*e.g.*, copy of an executed assignment), and a statement affirming that the documentary evidence of the chain of title from the original owner to the assignee was or concurrently is being submitted for recordation pursuant to § 3.11; or (ii) a statement specifying where documentary evidence of a chain of title from the original owner to the assignee is recorded in the assignment records of the Office (*e.g.*, reel and frame number). The power of attorney filed on October 29, 2007 does not include one of the above two options.

There is an outstanding Office action mailed December 19, 2007 that requires a reply from the applicant.

Telephone inquiries concerning this decision should be directed to undersigned at 571-272-1642.

April M. Wise
Petitions Examiner
Office of Petitions

cc: MICHAEL WRIGHT
9180 SOUTH GRANVILLE CIRCLE
SANDY, UT 84093

cc: MICHAEL SANDERSON
KING & SCHICKLI
247 N. BROADWAY
LEXINGTON, KY 40507

UNITED STATES PATENT AND TRADEMARK OFFICE

Commissioner for Patents
United States Patent and Trademark Office
P.O. Box 1450
Alexandria, VA 22313-1450
www.uspto.gov

TRANSPACIFIC LAW GROUP
617 NORTH DELAWARE STREET
SAN MATEO, CA 94401

COPY MAILED

JUN 13 2007

OFFICE OF PETITIONS

In re Application of Alberto GILLI Application No. 10/897,065 Filed: July 23, 2004 Attorney Docket No. Q82252	DECISION ON PETITION TO WITHDRAW FROM RECORD

This is a decision on the Request to Withdraw as attorney or agent of record under 37 C.F.R. § 1.36(b), filed February 22, 2007.

The request is **NOT APPROVED**.

The request cannot be approved because no reasons for withdrawal have been provided. The Office cannot, at this time, determine whether practitioner's request is one of the mandatory or permissive reasons enumerated in 37 CFR 10.40. Any subsequent requests must include reasons for withdrawal. Please note that there is a space provided for on PTO/SB/83 (Request to Withdraw as Attorney or Agent) to supply practitioner's reasons.

All future communications from the Office will continue to be directed to the above-listed address until otherwise notified by applicant.

There are no pending Office actions at the present time.

Telephone inquiries concerning this decision should be directed to Diane Goodwyn at 571-272-6735.

April Wise
Petitions Examiner
Office of Petitions

cc: VENABLE LLP
RAYMOND J. HO
575 7TH STREET, NW
WASHINGTON, DC 20004-1601

UNITED STATES PATENT AND TRADEMARK OFFICE

Commissioner for Patents
United States Patent and Trademark Office
P.O. Box 1450
Alexandria, VA 22313-1450
www.uspto.gov

Blakely Sokoloff Taylor & Zafman
1279 Oakmead Parkway
Sunnyvale, CA 94085-4040

COPY MAILED

OCT 1 8 2007

OFFICE OF PETITIONS

In re Application of	:	
John J. Beatty et al.	:	
Application No. 10/897,067	:	DECISION ON PETITION
Filed: July 21, 2004	:	
Attorney Docket No. 042390.P19367	:	

This is a decision on the petition under the unintentional provisions of 37 CFR 1.137(b), filed September 13, 2007, to revive the above-identified application.

The petition is **GRANTED**.

The application became abandoned as a result of petitioner's failure to file an appeal brief (and fee required by 37 CFR 41.20(b)(2)) within the time period provided in 37 CFR 41.37(a)(1). As an appeal brief (and appeal brief fee) was not filed within two (2) months of the Notice of Appeal filed January 22, 2007, and no extensions of time under the provisions of 37 CFR 1.136(a) were obtained, the appeal was dismissed and the proceedings as to the rejected claims were terminated. See 37 CFR 41.37(b). As no claim was allowed, the application became abandoned on March 23, 2007. See MPEP 1215.04. A Notice of Abandonment was mailed on September 10, 2007.

The petition satisfies the requirements of 37 CFR 1.137(b) in that petitioner has supplied (1) the reply in the form of an Appeal Brief, with a fee of $500.00, (2) the petition fee of $1,500.00, and (3) an adequate statement of unintentional delay.

Telephone inquiries concerning this decision should be directed to Kimberly Inabinet at (571) 272-4618.

This application is being referred to Technology Center AU 2822 for appropriate action in the normal course of business on the Appeal Brief received September 13, 2007.

Frances Hicks
Petitions Examiner
Office of Petitions

UNITED STATES PATENT AND TRADEMARK OFFICE

UNITED STATES DEPARTMENT OF COMMERCE
United States Patent and Trademark Office
Address: COMMISSIONER FOR PATENTS
P.O. Box 1450
Alexandria, Virginia 22313-1450
www.uspto.gov

Juan Carlos A. Marquez
c/o Stites & Harbison PLLC
1199 North Fairfax Street
Suite 900
Alexandria, VA 22314-1437

Mail Date: 04/21/2010

Applicant	: Kunio Harada	: DECISION ON REQUEST FOR
Patent Number	: 7645509	: RECALCULATION of PATENT
Issue Date	: 01/12/2010	: TERM ADJUSTMENT IN VIEW
Appliction No	: 10/897,099	: OF WYETH AND NOTICE OF INTENT TO
Filed	: 07/23/2004	: ISSUE CERTIFICATE OF CORRECTION
		:

The Request for Recalculation is **GRANTED** to the extent indicated.

The patent term adjustment has been determined to be **482** days. The USPTO will *sua sponte* issue a certificate of correction reflecting the amount of PTA days determined by the recalculation.

Prior to the issuance of the certificate of correction, the USPTO will afford patentee an opportunity to be heard and request reconsideration. Accordingly, patentee has **one month or thirty (30) days**, whichever is longer, to file a request for reconsideration of this patent term adjustment calculation. See 35 U.S.C. 154(b)(3)(B)(ii) and 37 CFR 1.322(a)(4). No extensions of time will be granted under 37 CFR 1.136.

Patentee should use document code PET.OP if electronically filing a request for reconsideration of this patent term adjustment calculation. The patentee must also include the information required by 37 CFR 1.705(b)(2) and the fee required by 37 CFR 1.18(e). If patentee does not file a timely request for reconsideration of this patent term adjustment calculation including the information required by 37 CFR 1.705(b)(2) and the fee required by 37 CFR 1.18(e), the USPTO will issue a certificate of correction reflecting the PTA determination noted above.

Patentee should be aware that in order to preserve the right to review in the United States District Court for the District of Columbia of the USPTO patent term adjustment determination, patentee must ensure that he or she also take the steps required under 35 U.S.C. 154(b)(4)(A) in a timely manner. Nothing in the request for recalculation should be construed as providing an alternative time frame for commencing a civil action under 35 U.S.C. 154(b)(4)(A).

Any questions concerning this decision should be directed to the Office of Patent Legal Administration at 571-272-7702.

UNITED STATES PATENT AND TRADEMARK OFFICE

COMMISSIONER FOR PATENTS
UNITED STATES PATENT AND TRADEMARK OFFICE
P.O. BOX 1450
ALEXANDRIA, VA 22313-1450
www.uspto.gov

Paper No.
MAILED

MAY 19 2010

OFFICE OF PETITIONS

RAGGIO & DINNIN, P.C.
2701 CAMBRIDGE COURT,
STE. 410
AUBURN HILLS MI 48326

In re Patent No. 7,462,153	:	ON APPLICATION FOR
Bostian et al.	:	PATENT TERM ADJUSTMENT
Issue Date: December 9, 2008	:	and
Application No. 10/897,121	:	NOTICE OF INTENT TO ISSUE
Filed: July 23, 2004	:	CERTIFICATE OF CORRECTION
Atty Docket No. SONO-003/00US	:	

This is a decision on the petition filed on November 7, 2008, which is being treated as a petition under 37 CFR 1.705(d) requesting that the patent term adjustment indicated on the above-identified patent be corrected to indicate that the term of the above-identified patent is extended or adjusted by one thousand one hundred fifty-two (1152) days.

The petition to correct the patent term adjustment indicated on the above-identified patent is **GRANTED to the extent indicated herein.** The patent term adjustment is corrected to indicate that the term of the above-identified patent is extended or adjusted by **one thousand eighty-two (1082)** days.

Patentee's calculations are incorrect. The period of adjustment pursuant to 37 CFR 1.703(a)(1) is 707 days, not 688 days. The patent issued three years and 505 days (not 575 days) after the actual filing date of this application. Periods of A delay of 43 days and 39 days overlap with the 505 days. Accordingly, the patent term adjustment is increased by 423 (505 - (43 + 39)) days to 1082 days.

The Office acknowledges submission of the $200.00 fee set forth in 37 CFR 1.18(e). No additional fees are required.

The Office will *sua sponte* issue a certificate of correction. Pursuant to 37 CFR 1.322, the Office will not issue a certificate of correction without first providing assignee or patentee an opportunity to be heard. Accordingly, patentees are given **one (1) month or thirty (30) days**, whichever is longer, from the mail date of this decision to respond. No extensions of time will be granted under § 1.136.

The application is being forwarded to the Certificates of Branch for issuance of a certificate of correction. The Office will issue a certificate of correction indicating that the term of the above-identified patent is extended or adjusted by one thousand eighty-two (1082) days.

Telephone inquiries specific to this matter should be directed to the undersigned at (571) 272-3219.

Nancy Johnson
Senior Petitions Attorney
Office of Petitions

Enclosure: Copy of DRAFT Certificate of Correction

UNITED STATES PATENT AND TRADEMARK OFFICE

CERTIFICATE OF CORRECTION

PATENT : 7,462,153 B2

DATED : **December 9, 2008** **DRAFT**

INVENTOR(S) : Bostian et al.

It is certified that error appears in the above-identified patent and that said Letters Patent is hereby corrected as shown below:

On the cover page,

[*] Notice: Subject to any disclaimer, the term of this patent is extended or adjusted under 35 USC 154(b) by 659 days

Delete the phrase "by 659 days" and insert – by 1082 days--

UNITED STATES PATENT AND TRADEMARK OFFICE

Commissioner for Patents
United States Patent and Trademark Office
P.O. Box 1450
Alexandria, VA 22313-1450
www.uspto.gov

DRINKER BIDDLE & REATH (DC)
1500 K STREET NW
SUITE 1100
WASHINGTON DC 20005-1209

COPY MAILED

SEP 22 2008

OFFICE OF PETITIONS

In re Application of	:	
Kenneth Monyak	:	
Application No. 10/897,128	:	ON PETITION
Filed: July 23, 2004	:	
Attorney Docket No. 024003-148	:	

This is a decision on the petition to withdraw the holding of abandonment under 37 CFR 1.181, filed June 10, 2008.

The petition is **GRANTED**.

This application was held abandoned for failure to timely file a response to the non-final Office action mailed November 21, 2007. This Office action set an extendable period for reply of three (3) months. No reply having been received, the application became abandoned on February 22, 2008. A Notice of Abandonment was mailed on May 28, 2008.

Petitioner contends that he did timely file a reply. In support, petitioner has included a copy of a USPTO date stamped receipt for the above application, dated January 23, 2008, and itemizing an Amendment.

A postcard receipt which itemizes and properly identifies the items which are being filed serves as *prima facie* evidence of receipt in the Office of all items listed thereon on the date stamped thereon by the Office. See MPEP 503.

In view thereof, **THE HOLDING OF ABANDONMENT IS WITHDRAWN.**

The application is being forwarded to Group Art Unit 3725 for consideration of the Amendment filed January 23, 2008 (copy supplied with the instant petition).

Telephone inquiries regarding this decision should be directed to the undersigned at (571)272-3207.

Cliff Congo
Petitions Attorney
Office of Petitions

UNITED STATES PATENT AND TRADEMARK OFFICE

Commissioner for Patents
United States Patent and Trademark Office
P.O. Box 1450
Alexandria, VA 22313-1450
www.uspto.gov

HESLIN ROTHENBERG FARLEY & MESITI PC
5 COLUMBIA CIRCLE
ALBANY, NY 12203

COPY MAILED
SEP 25 2006
OFFICE OF PETITIONS

In re Patent No. 7,062,366 :

Issue Date: June 13, 2006 :

Application No. 10/897,138 : ON PETITION

Filed: July 22, 2004 :

Attorney Docket No. 1759.177

This is a decision on the petition filed September 1, 2005, and in duplicate on June 26, 2006, which is being treated as a request under 37 CFR 3.81(b)[1] to correct the assignee on the front page of the above-identified patent by way of a Certificate of Correction.

The request is **granted**.

Deposit account 08-1935 will be charged $100.00 for the certificate of correction fee.

Telephone inquiries concerning this matter may be directed to the undersigned at (571) 272-3222. Any questions concerning the issuance of the Certificate of Correction should be directed to the Certificate of Correction Branch at (703) 305-8309.

The file is being forwarded to the Certificate of Correction Branch for issuance of the requested Certificate of Correction.

Kenya A. McLaughlin
Petitions Attorney
Office of Petitions

[1] See *Official Gazette* of June 22, 2004.

UNITED STATES PATENT AND TRADEMARK OFFICE

Commissioner for Patents
United States Patent and Trademark Office
P.O. Box 1450
Alexandria, VA 22313-1450
www.uspto.gov

3M INNOVATIVE PROPERTIES COMPANY
PO BOX 33427
ST. PAUL MN 55133-3427

COPY MAILED

OCT 1 1 2006

OFFICE OF PETITIONS

In re Application of	:	
Scheibner et al.	:	
Application No. 10/897,139	:	ON PETITION
Filed: July 22, 2004	:	
Attorney Docket No. 56507US012	:	

This is a decision on the petition under 37 C.F.R. § 1.137(b), filed July 18, 2006, to revive the above-identified application.

The petition is **GRANTED.**

The petition satisfies the conditions for revival pursuant to the provisions of 37 CFR 1.137(b) in that (1) the reply in the form of the Issue Fee Transmittal with payment of the issue and publication fees; (2) the petition fee; and (3) the required statement of unintentional delay have been received. Accordingly, the response has been accepted as having been unintentionally delayed.

This matter is being referred to the Publishing Division for processing into a patent.

Telephone inquiries regarding this decision should be directed to the undersigned at (571) 272-3206.

Liana Chase Walsh
Petitions Examiner
Office of Petitions

UNITED STATES PATENT AND TRADEMARK OFFICE

Commissioner for Patents
United States Patent and Trademark Office
P.O. Box 1450
Alexandria, VA 22313-1450
www.uspto.gov

STOLL, KEENON & PARK, LLP
300 W. VINE STREET, SUITE 2100
LEXINGTON KY 40507

COPY MAILED
OCT 13 2006
OFFICE OF PETITIONS

In re Application of :
Chapman :
Application No. 10/897,143 : ON PETITION
Filed: July 22, 2004 :
Attorney Docket No. 105711-117806 :
For: ANTI-JACK-KNIFE TRAILER HITCH AND TRAILER

This is a decision on the petition under 37 CFR 1.137(a), filed August 8, 2006, to revive the above-identified application. The petition will be treated under 37 CFR 1.181 as a petition to withdraw the holding of abandonment.

The petition under 37 CFR 1.181 is **granted**.

The petition under 37 CFR 1.137(a) is **dismissed as moot**.

This application was held abandoned for failure to respond in a timely manner to the non-final Office action mailed on November 3, 2005, which set an extendable three month period for reply. The Office has no record of receiving a timely filed extension of time or a reply to the November 3, 2005 non-final Office action in application no. 10/897,143. Therefore, the Office considered the application abandoned on February 4, 2006. A Notice of Abandonment was mailed on June 8, 2006.

Petitioner asserts that a proper response in the form of an amendment and a petition for a three month extension of time were timely filed on May 3, 2006. A review of a copy of the amendment reveals that the correct application number is listed. However, petitioner listed an incorrect application number (10/897,413) on the petition for extension of time and the Fee Transmittal filed on May 3, 2006. As a result, the documents were not associated with application no. 10/897,143's file.

A review of the contents of the application no. 10/897,413 reveals that the May 3, 2006 amendment and extension of time, *inter alia*, are present. The application number listed on the present petition is 10/897,413. It, too, is currently in the file of application no. 10/897,413.

Even though petitioner cited the wrong application number on the correspondence, under MPEP 502, " A minor error in the identification of the application can be corrected by the group provided the correct identification can be quickly discovered. Examples of minor errors are

transposed numbers, typographical errors, and listing the parent application number." The undersigned believes that a relatively simple review of Office records would have yielded the correct application number to enable the Office to match the May 3, 2006 correspondence with this application file. A cross-referencing of any of the accurate identifiers found on documents with Office databases would have revealed the typographical error.

As an aside, it is noted that petitioner filed a second petition for extension of time with the August 8, 2006 petition. The second petition was a copy of the first, except the application number was altered. The date the document was executed was not changed correspondingly. Petitioner is cautioned not to make modifications to previously submitted correspondence without initialing and dating the changes. The second petition for extension of time was certainly **not** submitted on May 3, 2006.

The undersigned will request that all May 3, 2006 correspondence and the August 8, 2006 petition be removed from the file of application no. 10/897,413 and placed in the file of the above-identified application.

The May 3, 2006 amendment was timely filed. Accordingly, the petition is **GRANTED**, the Notice of Abandonment is hereby vacated, and the holding of abandonment withdrawn.

Regarding fees, the $250.00 Rule 137(a) petition fee and the second three month extension of time ($510.00) submitted on August 8, 2006 will be refunded to petitioner's credit card. The first three month extension of time submitted on May 3, 2006 will be moved to the financial records for application no. 10/897,143.

The application file will be forwarded to the Technology Center AU 1286 for consideration of the amendment filed on May 3, 2006.

Telephone inquiries pertaining to this matter may be directed to the undersigned at (571) 272-3230.

Shirene Willis Brantley

Shirene Willis Brantley
Senior Petitions Attorney
Office of Petitions
Office of the Deputy Commissioner
for Patent Examination Policy

UNITED STATES PATENT AND TRADEMARK OFFICE

Commissioner for Patents
United States Patent and Trademark Office
P.O. Box 1450
Alexandria, VA 22313-1450
www.uspto.gov

EDWARD L. KELLEY
DBA INVENTION MANAGEMENT ASSOCIATES
241 LEXINGTON STREET
BLDG. 15 UNIT 1A
WOBURN MA 01801

COPY MAILED

JUL 05 2007

OFFICE OF PETITIONS

In re Application of :
HUGHES et al. :
Application No. 10/897,180 :
Filed: July 22, 2004 :
Atty Docket No. IMA-0023-U85CONTROL :

DECISION
ON PETITION

This is a decision on the petition under 37 CFR 1.137(b), filed March 1, 2007, to revive the above-identified application.

The petition is **GRANTED**.

The application became abandoned for failure to submit the issue fee in a timely manner in reply to the Notice of Allowance and Fee(s) Due, mailed October 20, 2006, which set a statutory period for reply of three (3) months. Accordingly, the application became abandoned on January 21, 2007.

The petition satisfies the conditions for revival pursuant to the provisions of 37 CFR 1.137(b) in that (1) the reply in the form of the issue fee of $1400 and the publication fee of $300; (2) the petition fee of $1500; and (3) the required statement of unintentional delay have been received. Accordingly, the issue and publication fee payments are accepted as having been unintentionally delayed.

Telephone inquiries concerning this decision should be directed to the undersigned at (571) 272-4787.

The application matter is referred to the Publishing Division for processing.

Denise Pothier
Petitions Examiner
Office of Petitions

UNITED STATES PATENT AND TRADEMARK OFFICE

Commissioner for Patents
United States Patent and Trademark Office
P.O. Box 1450
Alexandria, VA 22313-1450
www.uspto.gov

MORRISON & FOERSTER LLP
755 PAGE MILL RD
PALO ALTO CA 94304-1018

COPY MAILED

NOV 0 1 2006

OFFICE OF PETITIONS

In re Application of	:	
WU	:	
Application No. 10/897,191	:	DECISION ON PETITION
Filed: July 21, 2004	:	TO WITHDRAW
Attorney Docket No. 578772000100	:	FROM RECORD
	:	

This is a decision on the Request to Withdraw as attorney or agent of record under 37 C.F.R. § 1.36(b), filed February 08, 2006.

The request is **APPROVED**.

A grantable request to withdraw as attorney/agent of record must be signed by every attorney/agent seeking to withdraw or contain a clear indication that one attorney is signing on behalf of another/others. A request to withdraw will not be approved unless at least 30 (thirty) days would remain between the date of approval and the later of the expiration date of a time to file a response or the expiration date of the maximum time period which can be extended under 37 C.F.R. § 1.136(a).

The request was signed by Gladys H. Monroy on behalf of all attorneys of record who are associated with Customer Number 25226. All attorneys/agents associated with the Customer Number 25226 have been withdrawn.

Applicant is reminded that there is no attorney of record at this time.

The request to change the correspondence of record is not acceptable as the requested correspondence address is not that of: (1) the first named signing inventor; or (2) an intervening assignee of the entire interest under 37 C.F.R 3.71. All future communications from the Office will be directed to the first named signing inventor at the first copied address below until otherwise properly notified by the applicant.

A Review of the file discloses that a non-final Office action was mailed on July 11, 2006, which set forth a three month shortened statutory period for reply. Extensions of time under 37 CFR 1.136(a) are available. To date, there is no indication that a reply to the Office action of July 11, 2006 has been received.

Telephone inquiries concerning this decision should be directed to Patricia Volpe at 571-272-6825.

PAVolpe for

David Bucci
Petitions Examiner
Office of Petitions

cc: Jie Wu
24 Commons Lane
Foster City, CA 94404

cc: Jonathan A. Quine
Quine Intellectual Property Law Group, P.C.
2003 Clement Avenue, Suite 200
Alameda, CA 94501

UNITED STATES PATENT AND TRADEMARK OFFICE

Commissioner for Patents
United States Patent and Trademark Office
P.O. Box 1450
Alexandria, VA 22313-1450
www.uspto.gov

HAYNES AND BOONE, LLP
901 MAIN STREET, SUITE 3100
DALLAS, TX 75202

COPY MAILED

MAR 2 8 2007

OFFICE OF PETITIONS

In re Application of
Gordon Tibbitts
Application No. 10/897,196
Filed: July 22, 2004
Attorney Docket No. 37163.12

DECISION ON PETITION
TO WITHDRAW
FROM RECORD

This is a decision on the Request to Withdraw as attorney or agent of record under 37 C.F.R. § 1.36(b), filed January 31, 2007.

The request is **NOT APPROVED**.

A grantable request to withdraw as attorney/agent of record must be signed by every attorney/agent seeking to withdraw or contain a clear indication that one attorney is signing on behalf of another/others. A request to withdraw will not be approved unless at least 30 (thirty) days would remain between the date of approval and the later of the expiration date of a time to file a response or the expiration date of the maximum time period which can be extended under 37 C.F.R. § 1.136(a).

The Office cannot approve the request at this time since the reasons provided do not meet any of the conditions under the mandatory or permissive categories enumerated in 37 CFR 10.40. Section 10.40 of Title 37 of the Code of Federal Regulation states, "[a] practitioner shall not withdraw from employment in a proceeding before the Office without permission from the Office[.]" More specifically, 37 CFR 10.40 states, "[i]f paragraph (b) of this section is not applicable, a practitioner may not request permission to withdraw in matter pending before the Office unless such request or such withdrawal is" for one the permissive reasons listed in 37 CFR 10.40(c). The reasons set forth in the request, "The file is being transferred to another firm", does not meet any of the conditions set forth in 37 CFR 10.40.

A courtesy copy of this decision is being mailed to the address noted in the request.

All future communications from the Office will continue to be directed to the above-listed address until otherwise notified by applicant.

Applicant is advised that a non-final rejection setting a 3 month shortened statutory period was mailed December 28, 2006. Extensions of time are available under the provisions of 37 CFR 1.136(a). Failure to timely reply within the period set will result in the abandonment of this application.

Telephone inquiries concerning this decision should be directed to Kimberly Inabinet at 571-272- 4618.

Frances Hicks
Petitions Examiner
Office of Petitions

cc: Todd Mattingly
King & Spalding, LLP
1100 Louisiana, Ste. 4000
Houston, TX 77002

SPE RESPONSE FOR CERTIFICATE OF CORRECTION

Paper No.: _____

DATE : June 27, 2007

TO SPE OF : ART UNIT 2852 David M. Gray

SUBJECT : Request for Certificate of Correction for Appl. No.: 10/897,202 Patent No.: 7181156 B2

Please respond to this request for a certificate of correction within 7 days.

Please review the requested changes/corrections as shown in the **COCIN** document(s) in the IFW application image. No new matter should be introduced, nor should the scope or meaning of the claims be changed.

Please complete the response (see below) and forward the completed response to scanning using document code **COCX**.

Antonio Johnson
Certificates of Correction Branch
703-308-9390 ext. 117

Thank You For Your Assistance

The request for issuing the above-identified correction(s) is hereby:
Note your decision on the appropriate box.

- ☒ **Approved** — **All** changes apply.
- ☐ **Approved in Part** — Specify below which changes **do not** apply.
- ☐ **Denied** — State the reasons for denial below.

Comments: _____

DAVID M. GRAY
SUPERVISORY PATENT EXAMINER

SPE 2852 **Art Unit**

SPE RESPONSE FOR CERTIFICATE OF CORRECTION

Paper No.: _____

DATE : 03/18/10

TO SPE OF : ART UNIT 2621

SUBJECT : Request for Certificate of Correction for Appl. No.: 10897204 Patent No.: 7486334

Please respond to this request for a certificate of correction within 7 days.

FOR IFW FILES:

Please review the requested changes/corrections as shown in the **COCIN** document(s) in the IFW application image. No new matter should be introduced, nor should the scope or meaning of the claims be changed.

Please complete the response (see below) and forward the completed response to scanning using document code **COCX**.

FOR PAPER FILES:

Please review the requested changes/corrections as shown in the attached certificate of correction. Please complete this form (see below) and forward it with the file to:

Certificates of Correction Branch (C of C)
Randolph Square 9D40-D
Palm Location 7580

You can fax the Directors/SPE response to 571-270-9990

Lamonte Newsome
Certificates of Correction Branch
703-756-1574

Thank You For Your Assistance

The request for issuing the above-identified correction(s) is hereby:
Note your decision on the appropriate box.

- ☐ **Approved** — **All** changes apply.
- ☒ **Approved in Part** — Specify below which changes **do not** apply.
- ☐ **Denied** — State the reasons for denial below.

Comments: The Examiner has initiated a process to have the TD approved, and as soon as it is approved, the Examiner will generate a certificate of correction to correct the error.

Mehdad Dost
SPE

2621
Art Unit

UNITED STATES PATENT AND TRADEMARK OFFICE

Commissioner for Patents
United States Patent and Trademark Office
P.O. Box 1450
Alexandria, VA 22313-1450
www.uspto.gov

KNOBBE MARTENS OLSON & BEAR LLP
2040 MAIN STREET
FOURTEENTH FLOOR
IRVINE CA 92614

COPY MAILED

FEB 18 2009

OFFICE OF PETITIONS

In re Application of	:	
Carl F. Liepold	:	
Application No. 10/897,217	:	DECISION ON PETITION
Filed: July 22, 2004	:	
Attorney Docket No. KM2111.002CP1	:	

This is a decision on the petition under the unintentional provisions of 37 CFR 1.137(b), filed May 14, 2008, to revive the above-identified application.

The petition is **GRANTED**.

The application became abandoned for failure to reply in a timely manner to the non-final Office action mailed September 20, 2007, which set a shortened statutory period for reply of three (3) months. No extensions of time under the provisions of 37 CFR 1.136(a) were obtained. Accordingly, the application became abandoned on December 21, 2007.

The petition satisfies the requirements of 37 CFR 1.137(b) in that petitioner has supplied (1) the reply in the form of an Amendment, (2) the petition fee of $770.00, and (3) an adequate statement of unintentional delay.

The Power of Attorney to the petitioner was revoked in December of 2008. Therefore, a courtesy copy of this decision is being mailed to the address given on the petition; however, the Office will mail all future correspondence solely to the address of record.

Telephone inquiries concerning this decision should be directed to Joan Olszewski at (571) 272-7751.

This application is being referred to Technology Center AU 2855 for appropriate action by the Examiner in the normal course of business on the reply received.

/Liana Walsh/
Liana Walsh
Petitions Examiner
Office of Petitions

cc: Donald J. Lenkszus
PO Box 3064
Carefree, AZ 85377-3064

UNITED STATES PATENT AND TRADEMARK OFFICE

Commissioner for Patents
United States Patent and Trademark Office
P.O. Box 1450
Alexandria, VA 22313-1450
www.uspto.gov

Tim R. Seeley
Perkins Coie, LLP
Patent-Sea
P.O. Box 1247
Seattle, WA 98111-1247

COPY MAILED

JUN 23 2009

OFFICE OF PETITIONS

In re Application of	:	
Brent Hickey	:	
Application No. 10/897,218	:	DECISION ON
Filed: July 22, 2004	:	PETITION TO WITHDRAW
Attorney Docket No. 580158001US	:	FROM RECORD
	:	

This is a decision on the Request to Withdraw as attorney or agent of record under 37 C.F.R. § 1.36(b), filed May 22, 2009.

The request is **APPROVED**.

A grantable request to withdraw as attorney/agent of record must be signed by every attorney/agent seeking to withdraw or contain a clear indication that one attorney is signing on behalf of another/others. A request to withdraw will not be approved unless at least 30 (thirty) days would remain between the date of approval and the later of the expiration date of a time to file a response or the expiration date of the maximum time period which can be extended under 37 C.F.R. § 1.136(a).

The request was signed by Susan D. Betcher on behalf of attorney/agents associated with customer number 25096. All attorneys/agents associated with customer number 25096 have been withdrawn.

Applicant is reminded that there is no attorney of record at this time.

The correspondence address has been changed and is copied below.

Telephone inquiries concerning this decision should be directed to Kimberly Inabinet at 571-272-4618.

Kimberly Inabinet
Petitions Examiner
Office of Petitions

cc: Brent Hickey
700 North Dobson Road
Lot 32
Chandler, AZ 85224

UNITED STATES PATENT AND TRADEMARK OFFICE

UNITED STATES DEPARTMENT OF COMMERCE
United States Patent and Trademark Office
Address: COMMISSIONER FOR PATENTS
P.O. Box 1450
Alexandria, Virginia 22313-1450
www.uspto.gov

APPLICATION NUMBER	FILING OR 371(C) DATE	FIRST NAMED APPLICANT	ATTY. DOCKET NO./TITLE
10/897,218	07/22/2004	Brent Hickey	580158001US

CONFIRMATION NO. 1481

POWER OF ATTORNEY NOTICE

Tim R. Seeley
PERKINS COIE LLP
P.O. Box 1247
Seattle, WA 98111-1247

OC000000036607853

Date Mailed: 06/23/2009

NOTICE REGARDING CHANGE OF POWER OF ATTORNEY

This is in response to the Power of Attorney filed 05/22/2009.

- The withdrawal as attorney in this application has been accepted. Future correspondence will be mailed to the new address of record. 37 CFR 1.33.

/kainabinet/

Office of Data Management, Application Assistance Unit (571) 272-4000, or (571) 272-4200, or 1-888-786-0101

UNITED STATES PATENT AND TRADEMARK OFFICE

UNITED STATES DEPARTMENT OF COMMERCE
United States Patent and Trademark Office
Address: COMMISSIONER FOR PATENTS
P.O. Box 1450
Alexandria, Virginia 22313-1450
www.uspto.gov

IBM CORPORATION
INTELLECTUAL PROPERTY LAW
11501 BURNET ROAD
AUSTIN, TX 78758

Mail Date: 04/20/2010

Applicant	: Trang N. Huynh	: DECISION ON REQUEST FOR
Patent Number	: 7577991	: RECALCULATION of PATENT
Issue Date	: 08/18/2009	: TERM ADJUSTMENT IN VIEW
Appliction No	: 10/897,228	: OF WYETH AND NOTICE OF INTENT TO
Filed	: 07/22/2004	: ISSUE CERTIFICATE OF CORRECTION
		:

The Request for Recalculation is **GRANTED** to the extent indicated.

The patent term adjustment has been determined to be **1426** days. The USPTO will *sua sponte* issue a certificate of correction reflecting the amount of PTA days determined by the recalculation.

Prior to the issuance of the certificate of correction, the USPTO will afford patentee an opportunity to be heard and request reconsideration. Accordingly, patentee has **one month or thirty (30) days**, whichever is longer, to file a request for reconsideration of this patent term adjustment calculation. See 35 U.S.C. 154(b)(3)(B)(ii) and 37 CFR 1.322(a)(4). No extensions of time will be granted under 37 CFR 1.136.

Patentee should use document code PET.OP if electronically filing a request for reconsideration of this patent term adjustment calculation. The patentee must also include the information required by 37 CFR 1.705(b)(2) and the fee required by 37 CFR 1.18(e). If patentee does not file a timely request for reconsideration of this patent term adjustment calculation including the information required by 37 CFR 1.705(b)(2) and the fee required by 37 CFR 1.18(e), the USPTO will issue a certificate of correction reflecting the PTA determination noted above.

Patentee should be aware that in order to preserve the right to review in the United States District Court for the District of Columbia of the USPTO patent term adjustment determination, patentee must ensure that he or she also take the steps required under 35 U.S.C. 154(b)(4)(A) in a timely manner. Nothing in the request for recalculation should be construed as providing an alternative time frame for commencing a civil action under 35 U.S.C. 154(b)(4)(A).

Any questions concerning this decision should be directed to the Office of Patent Legal Administration at 571-272-7702.

UNITED STATES PATENT AND TRADEMARK OFFICE

COMMISSIONER FOR PATENTS
UNITED STATES PATENT AND TRADEMARK OFFICE
P.O. BOX 1450
ALEXANDRIA, VA 22313-1450
www.uspto.gov

ILYA ZBOROVSKY
6 SCHOOLHOUSE WAY
DIX HILLS, NY 11746

COPY MAILED

AUG 23 2006

OFFICE OF PETITIONS

In re Application of	:	
Chigirnskaya et al.	:	
Application No. 10/897,256	:	
Filed: July 23, 2004	:	ON PETITION
Title of Invention:	:	
BABY WALKING ASSISTING DEVICE	:	

This is a decision on the Petition to Withdraw Holding of Abandonment under 37 CFR 1.[1]81, filed September 6, 2005. The delay in treating this petition is regretted.

The petition is **granted.**

The above-identified application became abandoned for failure to reply in a timely manner to the Notice to File Corrected Application Papers ("Notice"), mailed September 17, 2004. The Notice set a two (2) month period for reply, and provided for extensions of time under 37 CFR 1.136(a). No reply having been received, the application became abandoned on November 18, 2004. A Notice of Abandonment was mailed June 9, 2005.

Applicant's Assertion

Applicant responds with the instant petition wherein Applicant avers that a timely reply was filed on December 5, 2004, and was received by this Office as evidenced by Applicant's return-receipt postcard. In support of this assertion, Applicant provides a copy of the Response, including replacement drawings, and a copy of a return-receipt postcard. A review of the Response reveals that it contains a Certificate of Mailing dated December 5, 2004, executed by the Petitioner. A review of the return-receipt postcard reveals that it acknowledges receipt of a letter, drawings and notice by this Office on December 8, 2004. Applicant also provides a copy of a Response.

In view of the foregoing, the petition is granted. The holding of abandonment is hereby withdrawn. Accord 37 CFR 1.8 and MPEP 503.

No petition fee has been charged and none is due.

The application file is being referred to the Office of Initial Patent Examination for continued processing in due course.

Telephone inquiries concerning this matter should be directed to the undersigned at (571) 272-3232.

Derek L. Woods
Attorney
Office of Petitions

UNITED STATES PATENT AND TRADEMARK OFFICE

Commissioner for Patents
United States Patent and Trademark Office
P.O. Box 1450
Alexandria, VA 22313-1450
www.uspto.gov

BERRY & ASSOCIATES P.C.
9255 SUNSET BOULEVARD
SUITE 810
LOS ANGELES CA 90069

COPY MAILED

APR 0 3 2008

OFFICE OF PETITIONS

In re Application of :
Jesse DONALDSON et al :
Application No. 10/897,264 : ON PETITION
Filed: July 21, 2004 :
Attorney Docket No. PALM-2776.PSI.CON :

This is a decision on the petition under 37 CFR 1.181, filed December 31, 2007, requesting withdrawal of the holding of abandonment mailed November 26, 2007.

The petition is **GRANTED**.

Petitioner requests the Notice of Abandonment mailed November 26, 2007 for failure to respond to the Office action mailed May 15, 2007 be withdrawn as petitioner timely filed a response. As evidenced by the itemized copy of the post card receipt date stamped November 26, 2007 a reply in the form of amendment, response, terminal disclaimer and petition for extensions of time was received by the USPTO. Furthermore, a review of the record indicates that the original copy of the response is now in the file.

Telephone inquiries concerning this decision should be directed to Quyen Leung at (571) 272-6051 or in her absence, the undersigned at (571) 272-7099.

This application is being referred to Technology Center AU 2114 for appropriate action in the normal course of business on the reply filed November 26, 2007.

David A. Bucci
Petitions Examiner
Office of Petitions

UNITED STATES PATENT AND TRADEMARK OFFICE

Commissioner for Patents
United States Patent and Trademark Office
P.O. Box 1450
Alexandria, VA 22313-1450
www.uspto.gov

COPY MAILED

COPY MAILED

MAY 0 5 2008

OFFICE OF PETITIONS

OFFICE OF PETITIONS

ZILKA-KOTAB, PC
P.O. BOX 721120
SAN JOSE CA 95172-1120

In re Application of

TREPL, John A. II et al.
Application No. 10/897,276
Filed: July 21, 2004
Attorney Docket No. **MRSHP003**

DECISION ON PETITION
TO WITHDRAW
FROM RECORD

This is a decision on the Request to Withdraw as attorney or agent of record under 37 C.F.R. § 1.36(b), filed March 20, 2008.

The request is **APPROVED**.

A grantable request to withdraw as attorney/agent of record must be signed by every attorney/agent seeking to withdraw or contain a clear indication that one attorney is signing on behalf of another/others. A request to withdraw will not be approved unless at least 30 (thirty) days would remain between the date of approval and the later of the expiration date of a time to file a response or the expiration date of the maximum time period which can be extended under 37 C.F.R. § 1.136(a).

The request was signed by Dominic Katab on behalf of all attorneys of record who are associated with customer No. 28875. All attorneys/agents associated with the Customer Number 28875 have been withdrawn. Applicant is reminded that there is no attorney of record at this time.

All future correspondence will be directed to the second named inventor Charles Marshall at the address indicated below.

There is an outstanding Office action mailed January 11, 2008 that requires a reply from the applicant.

Telephone inquiries concerning this decision should be directed to Tredelle Jackson at 571-272-2783.

Tredelle D. Jackson
Petitions Examiner
Office of Petitions

cc: **CHARLES MARSHALL**
MARSHALL MEDIA, INC.
655 NORTH CENTRAL AVE. 17th FLOOR
GLENDALE, CA 91203

SCANI **Please forward case and paper to address shown below.**

SPE RESPONSE FOR CERTIFICATE OF CORRECTION

Paper No.: _____

DATE : 9/14/07

TO SPE OF : ART UNIT 1743 WARDEN, Jill (Spe)

SUBJECT : Request for Certificate of Correction for Appl. No.: 10/897289 Patent No.: 7074367

Please respond to this request for a certificate of correction within 7 days.

Please review the requested changes/corrections as shown in the attached certificate of correction. Please complete this form (see below) and forward it with the file to:

Certificates of Correction Branch (CofC)
South Tower - 9A22
Palm Location 7580

HENRY RANDALL
Certificates of Correction Branch
703-308-9390 ext. _____

Thank You For Your Assistance

9/19/07

The request for issuing the above-identified correction(s) is hereby:
Note your decision on the appropriate box.

- [x] Approved — All changes apply.
- [ ] Approved in Part — Specify below which changes do not apply.
- [ ] Denied — State the reasons for denial below.

Comments: _____

SPE

1743
Art Unit

PTOL-306 (REV. 7/03)

U.S. DEPARTMENT OF COMMERCE Patent and Trademark Office

UNITED STATES PATENT AND TRADEMARK OFFICE

Commissioner for Patents
United States Patent and Trademark Office
P.O. Box 1450
Alexandria, VA 22313-1450
www.uspto.gov

MICHAEL G. CAMERON
JACKSON WALKER, LLP
2435 NORTH CENTRAL EXPRESSWAY
SUITE 600
RICHARDSON, TX 75080

COPY MAILED

APR 13 2007

OFFICE OF PETITIONS

In re Application of :
Richard Arent, et al. :
Application No. 10/897,299 : ON PETITION
Filed: July 22, 2004 :
Attorney Docket No. 101997.00048 :

This is a decision on the petition under the unintentional provisions of 37 CFR 1.137(b), filed December 13, 2006, to revive the above-identified application.

The petition is **GRANTED**.

The application became abandoned for failure to timely file a reply within the meaning of 37 CFR 1.113 to the final Office action of January 12, 2006. The proposed reply required for consideration of a petition to revive must be a Notice of Appeal (and appeal fee required by 37 CFR 41.20(b)(2), an amendment that *prima facie* places the application in condition for allowance, a Request for Continued Examination and submission (37 CFR 1.114), or the filing of a continuing application under 37 CFR 1.53(b). See MPEP 711.03(c)(II)(A)(2). A three-month extension of time pursuant to the provisions of 37 CFR 1.136(a) was obtained. Accordingly, the date of abandonment of this application is July 13, 2006.

The petition satisfies the requirements of 37 CFR 1.137(b) in that petitioner has supplied (1) the reply in the form of a Request for Continued Examination (RCE) and fee of $395, and the submission required by 37 CFR 1.114; (2) the petition fee of $750; and (3) a proper statement of unintentional delay.

Telephone inquiries concerning this decision should be directed to the April Wise at (571) 272-1642.

This application is being referred to Technology Center AU 3724 for processing of the RCE and for appropriate action by the Examiner in the normal course of business on the amendment submitted in accordance with 37 CFR 1.114.

Irvin Dingle
Petition Examiner
Office of Petitions

UNITED STATES PATENT AND TRADEMARK OFFICE

Commissioner for Patents
United States Patent and Trademark Office
P.O. Box 1450
Alexandria, VA 22313-1450
www.uspto.gov

JACKSON WALKER LLP
901 MAIN STREET
SUITE 6000
DALLAS, TX 75202-3797

COPY MAILED

JUL 29 2008

OFFICE OF PETITIONS

In re Application of	:	
Richard Arent, et al.	:	
Application No. 10/897,299	:	DECISION ON PETITION
Filed: July 22, 2004	:	
Attorney Docket No. 101997.00048	:	

This is a decision on the petition under the unintentional provisions of 37 CFR 1.137(b), filed January 22, 2008, to revive the above-identified application.

The petition is **GRANTED**.

The application became abandoned for failure to reply in a timely manner to the non-final Office action mailed, April 27, 2007, which set a shortened statutory period for reply of three (3) months. No extensions of time under the provisions of 37 CFR 1.136(a) were obtained. Accordingly, the application became abandoned on July 28, 2007.

The petition satisfies the requirements of 37 CFR 1.137(b) in that petitioner has supplied (1) the reply in the form of an amendment, (2) the petition fee of $770, and (3) a proper statement of unintentional delay.

Telephone inquiries concerning this decision should be directed to undersigned at (571) 272-1642.

This application is being referred to Technology Center AU 3724 for appropriate action by the Examiner in the normal course of business on the reply received January 22, 2008.

April M. Wise
Petitions Examiner
Office of Petitions

UNITED STATES PATENT AND TRADEMARK OFFICE

Commissioner for Patents
United States Patent and Trademark Office
P.O. Box 1450
Alexandria, VA 22313-1450
www.uspto.gov

KNOBBE MARTENS OLSON & BEAR LLP
2040 MAIN STREET
FOURTEENTH FLOOR
IRVINE CA 92614

MAILED
MAY 04 2010
OFFICE OF PETITIONS

In re Application of	:	
Simpson, et al.	:	
Application No. 10/897,312	:	NOTICE
Filed: July 21, 2004	:	
Attorney Docket No. DEXCOM.023A	:	

This is a notice regarding your request for acceptance of a fee deficiency submission under 37 CFR 1.28, filed January 14, 2010.

The Office no longer investigates or rejects original or reissue patent under 37 CFR 1.56. **1098 Off. Gaz. Pat. Office 502 (January 3, 1989)**. Therefore, nothing in this Notice is intended to imply that an investigation was done.

Your fee deficiency submission under 37 CFR 1.28 is hereby **ACCEPTED**.

This patent is no longer entitled to small entity status. Accordingly, all future fees paid in this patent must be paid at the large entity rate.

Inquiries related to this communication should be directed to the undersigned at (571) 272-3230.

Shirene Willis Brantley
Senior Petitions Attorney
Office of Petitions

UNITED STATES PATENT AND TRADEMARK OFFICE

Commissioner for Patents
United States Patent and Trademark Office
P.O. Box 1450
Alexandria, VA 22313-1450
www.uspto.gov

FLIESLER MEYER LLP
FOUR EMBARCADERO CENTER, SUITE 400
SAN FRANCISCO, CA 94111

COPY MAILED

MAR 1 5 2006

OFFICE OF PETITIONS

In re Application of	:
Richard M. Ehrilich	:
Application No. 10/897,313	: DECISION GRANTING PETITION
Filed: July 22, 2004	: UNDER 37 CFR 1.313(c)(2)
Attorney Docket No. PANA-01075USM	:

This is a decision on the petition, filed March 10, 2006, under 37 CFR 1.313(c)(2) to withdraw the above-identified application from issue after payment of the issue fee.

The petition is **GRANTED**.

The above-identified application is withdrawn from issue for consideration of a submission under 37 CFR 1.114 (request for continued examination). See 37 CFR 1.313(c)(2).

Petitioner is advised that the issue fee paid on February 13, 2006 in the above-identified application cannot be refunded. If, however, the above-identified application is again allowed, petitioner may request that it be applied towards the issue fee required by the new Notice of Allowance.[1]

Telephone inquiries should be directed to the undersigned at (571) 272-3218.

This matter is being referred to Technology Center AU 2651 for processing of the request for continued examination under 37 CFR 1.114 and for consideration of the Information Disclosure Statement.

Frances Hicks
Petitions Examiner
Office of Petitions

C:\Documents and Settings\FHicks\My Documents\470\Mar9\897313.wpd

---

[1] *The request to apply the issue fee to the new Notice may be satisfied by completing and returning the new Part B – Fee(s) Transmittal Form (along with any balance due at the time of submission), which includes the following language thereon: "The Director of the USPTO is requested to apply the Issue Fee and Publication Fee (if any) or to re-apply any previously paid issue fee in the application identified above. Petitioner is advised that, whether a fee is indicated as being due or not, the Issue Fee Transmittal Form* ***must*** *be completed and timely submitted to avoid abandonment. Note the language in bold text on the first page of the Notice of Allowance and Fee(s) Due (PTOL-85).*

UNITED STATES PATENT AND TRADEMARK OFFICE

Commissioner for Patents
United States Patent and Trademark Office
P.O. Box 1450
Alexandria, VA 22313-1450
www.uspto.gov

PATENT LAW OFFICES OF MICHAEL E. WOODS
16 HAZEL CT.
SAN RAFAEL CA 94901-5223

MAILED

JUL 21 2009

OFFICE OF PETITIONS

In re Application of	:	
Roger A. BAUCHSPIES	:	
Application No. 10/897,316	:	DECISION ON PETITION
Filed: July 22, 2004	:	
Attorney Docket No. 20042-7002	:	

This is a decision on the petition under the unintentional provisions of 37 CFR 1.137(b), filed June 20, 2009, to revive the above-identified application.

The petition is **GRANTED**.

The application became abandoned for failure to reply in a timely manner to the non-final Office action mailed, August 29, 2008 which set a shortened statutory period for reply of three (3) month. No extensions of time under the provisions of 37 CFR 1.136(a) were obtained. Accordingly, the application became abandoned on November 30, 2008.

The petition satisfies the conditions for revival pursuant to the provisions of 37 CFR 1.137(b) in that (1) the reply in the form of an amendment (2) the petition fee of $810.00 and (3) the required statement of unintentional delay have been received. Accordingly, the reply to the restriction requirement of August 29, 2008 has been accepted as having been unintentionally delayed.

Telephone inquiries concerning this decision should be directed to the undersigned at (571) 272-4231.

The application is being referred to the Technology Center AU 2624 for appropriate action on the concurrently filed amendment.

Michelle R. Eason
Paralegal Specialist
Office of Petitions

UNITED STATES PATENT AND TRADEMARK OFFICE

Commissioner for Patents
United States Patent and Trademark Office
P.O. Box 1450
Alexandria, VA 22313-1450
www.uspto.gov

PATTERSON, THUENTE, SKAAR & CHRISTENSEN, P.A.
4800 IDS CENTER
80 SOUTH 8TH STREET
MINNEAPOLIS MN 55402-2100

COPY MAILED

FEB 04 2005

OFFICE OF PETITIONS

In re Application of
Gupta, et al.
Application No.: 10/897,317
Filed: July 22, 2004
Attorney Docket No.: 2147.14US02
For: PROSTHETIC WRIST IMPLANT

DECISION REFUSING STATUS
UNDER 37 CFR 1.47(a)

This is a decision on the petition under 37 CFR 1.47(a), filed December 20, 2004 (certificate of mailing date December 14, 2004).

The petition is **DISMISSED**.

Any request for reconsideration of this decision must be submitted within TWO (2) MONTHS from the mail date of this decision. Extensions of time under 37 CFR 1.136(a) are permitted. Any response should be entitled "Request for Reconsideration of Petition Under 37 CFR 1.47(a)" and may include an oath or declaration executed by the inventor. **Failure to respond will result in abandonment of the application.**

The above-identified application was filed on July 22, 2004 without an executed oath or declaration. On September 14, 2004, a Notice to File Missing Parts of Nonprovisional Application (Notice) was mailed. This Notice required petitioners to file an executed declaration, filing fees, a surcharge for their late filing, and replacement drawings within two months of the mail date of the Notice. Extensions of time under 37 CFR 1.136(a) were available.

In response, on December 20, 2004 (certificate of mailing date December 14, 2004), a petition for a one month extension of time and required fee, a declaration executed by 2 of 3 joint inventors, the surcharge, application filing fees, replacement drawings, the petition fee, and the instant petition were filed. A statement of facts of Attorney Paul C. Onderick was part of the petition. Attorney Onderick explains that non-signing joint inventor Amitava Gupta received a copy of the application, a declaration, power of attorney and assignment through his attorney, Kenneth L. Sales. Attorney Onderick requested that Dr. Gupta sign the papers and return them to him. In a letter dated November 3, 2004, Attorney Sales acknowledged receipt of the package and stated that he advised his client not to sign the declaration or other papers. No further communication took place.

A grantable petition under 37 CFR 1.47(a) requires

(1) a petition including proof of the pertinent facts establishing that the joint inventor(s) refuses to join, or cannot be found or reached after diligent effort,
(2) a proper oath or Declaration executed by the available joint inventor(s),
(3) the fee of $200 as specified in 37 CFR § 1.17(g), and
(4) the last known address of the omitted inventor(s).

This petition lacks item (2) above.

As to item (2), an oath or declaration for the patent application in compliance with 37 CFR 1.63 and 1.64 has not been presented. It is noted that each joint inventor's mailing address is the same. Given the fact that Dr. Gupta does not work at Avanta Orthopaedics, it is assumed that he does not receive mail at the same address as the other joint inventors.

MPEP 605.03 states that, "Applicant's mailing address means that address at which he or she customarily receives his or her mail. Either applicant's home or business address is acceptable as the mailing address.... In situations where an inventor does not execute the oath or declaration and the inventor is not deceased, such as in an application filed under 37 CFR 1.47, the inventor's most recent home address must be given...."

The available inventors must execute a new declaration that lists the most recent home address or mailing address for Dr. Gupta. MPEP 605.03

An oath or declaration in compliance with 37 CFR 1.63 and 1.64 signed by the Rule 1.47 applicants on behalf of Dr. Gupta is REQUIRED. See MPEP 409.03(a).

Regarding finances, deposit account number 16-0631 was charged an additional $250 for fees owed.

Further correspondence with respect to this matter should be addressed as follows:

By mail: Mail Stop PETITION
Commissioner for Patents
Post Office Box 1450
Alexandria, VA 22313-1450

By hand: U.S. Patent and Trademark Office
Customer Service Window, Mail Stop Petition
Randolph Building
401 Dulany Street
Alexandria, VA 22314

By FAX: (703) 872-9306 – ATTN: Office of Petitions

Telephone inquiries should be directed to the undersigned at (571) 272-3230.

E. Shirene Willis

E. Shirene Willis
Senior Petitions Attorney
Office of Petitions

UNITED STATES PATENT AND TRADEMARK OFFICE

Commissioner for Patents
United States Patent and Trademark Office
P.O. Box 1450
Alexandria, VA 22313-1450
www.uspto.gov

PATTERSON, THUENTE, SKAAR & CHRISTENSEN, P.A.
4800 IDS CENTER
80 SOUTH 8TH STREET
MINNEAPOLIS MN 55402-2100

COPY MAILED

MAR 29 2005

OFFICE OF PETITIONS

In re Application of
Gupta, et al.
Application No.: 10/897,317
Filed: July 22, 2004
Attorney Docket No.: 2147.14US02
For: PROSTHETIC WRIST IMPLANT

DECISION ACCORDING STATUS
UNDER 37 CFR 1.47(a)

This is a decision on the reconsideration petition under 37 CFR 1.47(a), March 15, 2005.

The petition is **GRANTED**.

Petitioners have shown that the non-signing inventor, Amitava Gupta, has constructively refused to join in the filing of the above-identified application after having been presented with the application papers. Specifically, the statement of facts of Attorney Paul C. Onderick explains that Dr. Gupta received a copy of the application, a declaration, power of attorney and assignment through his attorney, Kenneth L. Sales. Attorney Onderick requested that Dr. Gupta sign the papers and return them to him. In a letter dated November 3, 2004, Attorney Sales acknowledged receipt of the package and stated that he advised his client not to sign the declaration or other papers. No further communication took place. Petitioners have submitted a declaration in compliance with 37 CFR 1.63 and 1.64.

This application and papers have been reviewed and found in compliance with 37 CFR 1.47(a). This application is hereby accorded Rule 1.47(a) status.

As provided in Rule 1.47(c), this Office will forward notice of this application's filing to the non-signing inventor at the address given in the petition. Notice of the filing of this application will also be published in the Official Gazette.

After this decision is mailed, the above-identified application will be forwarded to Technology Center 3738 for examination in due course.

Telephone inquiries should be directed to the undersigned at (571) 272-3230.

E. Shirene Willis

E. Shirene Willis
Senior Petitions Attorney
Office of Petitions

UNITED STATES PATENT AND TRADEMARK OFFICE

Commissioner for Patents
United States Patent and Trademark Office
P.O. Box 1450
Alexandria, VA 22313-1450
www.uspto.gov

AMITAVA GUPTA
12016 CHARLOTTE COURT
PROSPECT, KY 40059

COPY MAILED

MAR 29 2005

LETTER OFFICE OF PETITIONS

In re Application of
Gupta, et al.
Application No.: 10/897,317
Filed: July 22, 2004
Attorney Docket No.: 2147.14US02
For: PROSTHETIC WRIST IMPLANT

Dear Dr. Gupta:

You are named as a joint inventor in the above identified United States patent application, filed under the provisions of 35 U.S.C. 116 (United States Code), and 37 CFR 1.47(a), Rules of Practice in Patent Cases. Should a patent be granted on the application you will be designated therein as a joint inventor.

As a named inventor you are entitled to inspect any paper in the file wrapper of the application, order copies of all or any part thereof (at a prepaid cost per 37 CFR 1.19) or make your position of record in the application. Alternatively, you may arrange to do any of the preceding through a registered patent attorney or agent presenting written authorization from you. If you care to join the application, counsel of record (see below) would presumably assist you. Joining in the application would entail the filing of an appropriate oath or declaration by you pursuant to 37 CFR 1.63.

Requests for information regarding your application should be directed to the File Information Unit at (703)308-2733. Information regarding how to pay for and order a copy of the application, or a specific paper in the application, should be directed to Certification Division at (703)308-9726 or 1(800)972-6382 (outside the Washington D.C. area).

Telephone inquiries regarding this communication should be directed to the undersigned at (571) 272-3230.

E. Shirene Willis
Senior Petitions Attorney
Office of Petitions

ATTORNEY OF RECORD: PATTERSON, THUENTE, SKAAR & CHRISTENSEN, P.A.
4800 IDS CENTER
80 SOUTH 8TH STREET
MINNEAPOLIS MN 55402-2100

UNITED STATES PATENT AND TRADEMARK OFFICE

Commissioner for Patents
United States Patent and Trademark Office
P.O. Box 1450
Alexandria, VA 22313-1450
www.uspto.gov

Fish & Richardson P.C.
225 Franklin Street
Boston, MA 02110

COPY MAILED

SEP 0 6 2006

OFFICE OF PETITIONS

In re Application of	:	
Chad L. Cook	:	
Application No. 10/897,321	:	DECISION ON PETITION
Filed: July 22, 004	:	TO WITHDRAW
Attorney Docket No. 17127-007001	:	FROM RECORD
	:	

This is a decision on the Request to Withdraw as attorney or agent of record under 37 C.F.R. § 1.36(b), filed March 0, 2006.

The request is **NOT APPROVED**.

A grantable request to withdraw as attorney/agent of record must be signed by every attorney/agent seeking to withdraw or contain a clear indication that one attorney is signing on behalf of another/others. A request to withdraw will not be approved unless at least 30 (thirty) days would remain between the date of approval and the later of the expiration date of a time to file a response or the expiration date of the maximum time period which can be extended under 37 C.F.R. § 1.136(a).

The Office cannot approve the request at this time since the reasons provided do not meet any of the conditions under the mandatory or permissive categories enumerated in 37 CFR 10.40. Section 10.40 of Title 37 of the Code of Federal Regulation states, "[a] practitioner shall not withdraw from employment in a proceeding before the Office without permission from the Office[.]" More specifically, 37 CFR 10.40 states, "[i]f paragraph (b) of this section is not applicable, a practitioner may not request permission to withdraw in matter pending before the Office unless such request or such withdrawal is" for one the permissive reasons listed in 37 CFR 10.40(c). The reasons set forth in the request, **the assignee failed to pay the attorney's bills after due notification and the elapse of a substantial period of time**, do not meet any of the conditions set forth in 37 CFR 10.40 because the assignee has properly intervened in accordance with 37 CFR 3.373(b).

All future communications from the Office will continue to be directed to the above-listed address until otherwise notified by applicant.

Telephone inquiries concerning this decision should be directed to Terri Williams at 571-272-2991.

David Bucci
Petitions Examiner
Office of Petitions

cc: Black Dragon Software
430 Bedford Street
Suite 100
Lexington, MA 02420

cc: David L. Smith
93 Sugarloaf Drive
Tiburon, CA 94920-1685

cc: David L. Smith
659 Chaparral Circle
Napa, CA 94558

UNITED STATES PATENT AND TRADEMARK OFFICE

Commissioner for Patents
United States Patent and Trademark Office
P.O. Box 1450
Alexandria, VA 22313-1450
www.uspto.gov

Fish & Richardson P.C.
225 Franklin Street
Boston, MA 02110

COPY MAILED

AUG 29 2007

OFFICE OF PETITIONS

In re Application of	:	
Chad L. Cook	:	
Application No. 10/897,321	:	DECISION ON PETITION
Filed: July 22, 2004	:	TO WITHDRAW
Attorney Docket No. 17127-007001	:	FROM RECORD
	:	

This is a decision on the Request to Withdraw as attorney or agent of record under 37 C.F.R. § 1.36(b), filed April 2, 2007.

The request is **APPROVED**.

A grantable request to withdraw as attorney/agent of record must be signed by every attorney/agent seeking to withdraw or contain a clear indication that one attorney is signing on behalf of another/others. A request to withdraw will not be approved unless at least 30 (thirty) days would remain between the date of approval and the later of the expiration date of a time to file a response or the expiration date of the maximum time period which can be extended under 37 C.F.R. § 1.136(a).

The request was signed by Denis G. Maloney on behalf of all attorneys of record. All attorneys/agents have been withdrawn. Applicant is reminded that there is no attorney of record at this time.

All future correspondence will be directed to the first named inventor Chad L. Cook at the address indicated below.

There is no outstanding Office action at this time.

Telephone inquiries concerning this decision should be directed to Terri Williams at 571-272-2991.

T. Williams
Terri Williams
Petitions Examiner
Office of Petitions

cc: **Chad L. Cook**
165 Sheldonville Road
North Attleborough, MA 02760

cc: **David L. Smith**
93 Sugarloaf Dr.
Tiburon, CA 94920-1685

cc: **David L. Smith**
659 Chaparral Circle
Napa, CA 94558

UNITED STATES PATENT AND TRADEMARK OFFICE

UNITED STATES DEPARTMENT OF COMMERCE
United States Patent and Trademark Office
Address: COMMISSIONER FOR PATENTS
P.O. Box 1450
Alexandria, Virginia 22313-1450
www.uspto.gov

APPLICATION NUMBER	FILING OR 371 (c) DATE	FIRST NAMED APPLICANT	ATTY. DOCKET NO./TITLE
10/897,321	07/22/2004	Chad L. Cook	17127-007001

CONFIRMATION NO. 1530

OC000000025593198

Fish & Richardson P.C.
225 Franklin Street
Boston, MA 02110

Date Mailed: 08/29/2007

NOTICE REGARDING CHANGE OF POWER OF ATTORNEY

This is in response to the Power of Attorney filed 04/02/2007.

- The withdrawal as attorney in this application has been accepted. Future correspondence will be mailed to the new address of record. 37 CFR 1.33.

G. Williams

Office of Initial Patent Examination (571) 272-4000, or 1-800-PTO-9199

FORMER ATTORNEY/AGENT COPY

UNITED STATES PATENT AND TRADEMARK OFFICE

Commissioner for Patents
United States Patent and Trademark Office
P.O. Box 1450
Alexandria, VA 22313-1450
www.uspto.gov

Fish & Richardson P.C.
225 Franklin Street
Boston, MA 02110

COPY MAILED
SEP 06 2006
OFFICE OF PETITIONS

In re Application of	:	
Chad L. Cook et al.	:	
Application No. 10/897,323	:	DECISION ON PETITION
Filed: July 22, 2004	:	TO WITHDRAW
Attorney Docket No. 17127-017001	:	FROM RECORD
	:	

This is a decision on the Request to Withdraw as attorney or agent of record under 37 C.F.R. § 1.36(b), filed March 10, 2006.

The request is **NOT APPROVED**.

A grantable request to withdraw as attorney/agent of record must be signed by every attorney/agent seeking to withdraw or contain a clear indication that one attorney is signing on behalf of another/others. A request to withdraw will not be approved unless at least 30 (thirty) days would remain between the date of approval and the later of the expiration date of a time to file a response or the expiration date of the maximum time period which can be extended under 37 C.F.R. § 1.136(a).

The Office cannot approve the request at this time since the reasons provided do not meet any of the conditions under the mandatory or permissive categories enumerated in 37 CFR 10.40. Section 10.40 of Title 37 of the Code of Federal Regulation states, "[a] practitioner shall not withdraw from employment in a proceeding before the Office without permission from the Office[.]" More specifically, 37 CFR 10.40 states, "[i]f paragraph (b) of this section is not applicable, a practitioner may not request permission to withdraw in matter pending before the Office unless such request or such withdrawal is" for one the permissive reasons listed in 37 CFR 10.40(c). The reasons set forth in the request, **the assignee failed to pay the attorney's bills after due notification and the elapse of a substantial period of time**, do not meet any of the conditions set forth in 37 CFR 10.40 because the assignee has properly intervened in accordance with 37 CFR 3.373(b).

All future communications from the Office will continue to be directed to the above-listed address until otherwise notified by applicant.

Telephone inquiries concerning this decision should be directed to Terri Williams at 571-272-2991.

David Bucci
Petitions Examiner
Office of Petitions

cc: Black Dragon Software
430 Bedford Street
Suite 100
Lexington, MA 02420

cc: David L. Smith
93 Sugarloaf Drive
Tiburon, CA 94920-1685

cc: David L. Smith
659 Chaparral Circle
Napa, CA 94558

UNITED STATES PATENT AND TRADEMARK OFFICE

Commissioner for Patents
United States Patent and Trademark Office
P.O. Box 1450
Alexandria, VA 22313-1450
www.uspto.gov

Fish & Richardson, P.C.
225 Franklin Street
Boston, MA 02110

COPY MAILED

OCT 1 2 2007

OFFICE OF PETITIONS

In re Application of	:	
Chad L. Cook et al.	:	
Application No. 10/897,323	:	DECISION ON PETITION
Filed: July 22, 2007	:	TO WITHDRAW
Attorney Docket No. 17127-017001	:	FROM RECORD
	:	

This is a decision on the renewed Request to Withdraw as attorney or agent of record under 37 C.F.R. § 1.36(b), filed April 2, 2007.

The request is **APPROVED**.

A grantable request to withdraw as attorney/agent of record must be signed by every attorney/agent seeking to withdraw or contain a clear indication that one attorney is signing on behalf of another/others. A request to withdraw will not be approved unless at least 30 (thirty) days would remain between the date of approval and the later of the expiration date of a time to file a response or the expiration date of the maximum time period which can be extended under 37 C.F.R. § 1.136(a).

The request was signed by Dennis G. Maloney on behalf of all attorneys of record. All attorneys/agents have been withdrawn. Applicant is reminded that there is no attorney of record at this time.

There is no outstanding Office action at this time.

Telephone inquiries concerning this decision should be directed to Terri Williams at 571-272-2991.

T. Williams

Terri Williams
Petitions Examiner
Office of Petitions

cc: **Chad L. Cook**
165 Sheldonville Road
North Attleborough, MA 02760

UNITED STATES PATENT AND TRADEMARK OFFICE

Commissioner for Patents
United States Patent and Trademark Office
P.O. Box 1450
Alexandria, VA 22313-1450
www.uspto.gov

PERKINS COIE LLP
P.O. BOX 2168
MENLO PARK, CA 94026

COPY MAILED

APR 1 1 2007

OFFICE OF PETITIONS

In re Application of :
Charles W. Albritton, et al. :
Application No. 10/897,327 :
Filed: July 21, 2004 :
Attorney Docket No. 37469-8015.US01 :

ON PETITION

This is a decision on the petition, filed July 26, 2006, to revive the above-identified application under the provisions of 37 CFR 1.137(b).

The petition is **GRANTED**.

The application became abandoned for a failure to reply in a timely manner to a non-final Office action mailed December 13, 2005. A Notice of Abandonment was mailed on June 28, 2006. On July 26, 2006, the present petition was filed.

The petition satisfies the requirements of 37 CFR 1.137(b) in that petitioner has supplied (1) the reply in the form of an amendment; (2) the petition fee of $1,500; and (3) an adequate statement of unintentional delay[1].

The Revocation and Power of Attorney filed July 26, 2006, has not been accepted, as it does not comply with the requirements of 37 CFR 3.73(b)(i). However, in accordance with 37 CFR 1.34(a), the signature of Lawrence J. Shurupoff appearing on the petition shall constitute a representation to the United States Patent and Trademark Office that he is authorized to represent the particular party on whose behalf he acts. If Mr. Shurupoff desires to receive future correspondence regarding this application, the appropriate power of attorney or authorization of agent must be submitted. A courtesy copy of this decision is being mailed to petitioner. Nevertheless, all future correspondence regarding this application file will be directed solely to the address of record.

The application is being referred to Technology Center AU 3721 for consideration of the amendment filed July 26, 2006.

[1] 37 CFR 1.137(b)(3) requires a statement that the entire delay in filing the required reply from the due date for the reply until the filing of a grantable petition pursuant to 37 CFR 1.137(b) was unintentional. While the statement is not made by an attorney of record, such statement is being treated as having been made as the result of a reasonable inquiry into the facts and circumstances of such delay. See 37 CFR 10.18(b) and Changes to Patent Practice and Procedure; Final Rule Notice, 62 Fed. Reg. 53131, 53178 (October 10, 1997), 1203 Off. Gaz. Pat. Office 63, 103 (October 21, 1997). In the event that such an inquiry has not been made, petitioner must make such an inquiry. If such inquiry results in the discovery that it is not correct that the entire delay in filing the required reply from the due date for the reply until the filing of a grantable petition pursuant to 37 CFR 1.137(b) was unintentional, petitioner must notify the Office.

Telephone inquiries concerning this decision should be directed to the undersigned at (571) 272-3204. Inquiries relating to further prosecution should be directed to the Technology Center.

Sherry D. Brinkley
Petitions Examiner
Office of Petitions

cc: LAWRENCE J. SHURUPOFF
2381 EXECUTIVE CENTER DRIVE
BOCA RATON, FL 33431

UNITED STATES PATENT AND TRADEMARK OFFICE

UNITED STATES DEPARTMENT OF COMMERCE
United States Patent and Trademark Office
Address: COMMISSIONER FOR PATENTS
P.O. Box 1450
Alexandria, Virginia 22313-1450
www.uspto.gov

APPL NO.	FILING OR 371 (c) DATE	ART UNIT	FIL FEE REC'D	ATTY.DOCKET NO	DRAWINGS	TOT CLMS	IND CLMS
10/897,343	07/21/2004	2862	900	04490/LH	8	17	2

CONFIRMATION NO. 9582

UPDATED FILING RECEIPT

OC000000014129768

01933
FRISHAUF, HOLTZ, GOODMAN & CHICK, PC
767 THIRD AVENUE
25TH FLOOR
NEW YORK, NY 10017-2023

Date Mailed: 10/19/2004

Receipt is acknowledged of this regular Patent Application. It will be considered in its order and you will be notified as to the results of the examination. Be sure to provide the U.S. APPLICATION NUMBER, FILING DATE, NAME OF APPLICANT, and TITLE OF INVENTION when inquiring about this application. Fees transmitted by check or draft are subject to collection. Please verify the accuracy of the data presented on this receipt. **If an error is noted on this Filing Receipt, please write to the Office of Initial Patent Examination's Filing Receipt Corrections, facsimile number 703-746-9195. Please provide a copy of this Filing Receipt with the changes noted thereon. If you received a "Notice to File Missing Parts" for this application, please submit any corrections to this Filing Receipt with your reply to the Notice. When the USPTO processes the reply to the Notice, the USPTO will generate another Filing Receipt incorporating the requested corrections (if appropriate).**

Applicant(s)

Masanobu Shimizu, Hachioji-shi, JAPAN;

Assignment For Published Patent Application

Olympus Corporation, Tokyo, JAPAN

Power of Attorney: None

Domestic Priority data as claimed by applicant

Foreign Applications

JAPAN 2003-201268 07/24/2003

If Required, Foreign Filing License Granted: 09/21/2004

The country code and number of your priority application, to be used for filing abroad under the Paris Convention, is US10/897,343

Projected Publication Date: 01/27/2005

Non-Publication Request: No

Early Publication Request: No

Title

Image recording apparatus and image recording method

Preliminary Class

347

LICENSE FOR FOREIGN FILING UNDER
Title 35, United States Code, Section 184
Title 37, Code of Federal Regulations, 5.11 & 5.15

GRANTED

The applicant has been granted a license under 35 U.S.C. 184, if the phrase "IF REQUIRED, FOREIGN FILING LICENSE GRANTED" followed by a date appears on this form. Such licenses are issued in all applications where the conditions for issuance of a license have been met, regardless of whether or not a license may be required as set forth in 37 CFR 5.15. The scope and limitations of this license are set forth in 37 CFR 5.15(a) unless an earlier license has been issued under 37 CFR 5.15(b). The license is subject to revocation upon written notification. The date indicated is the effective date of the license, unless an earlier license of similar scope has been granted under 37 CFR 5.13 or 5.14.

This license is to be retained by the licensee and may be used at any time on or after the effective date thereof unless it is revoked. This license is automatically transferred to any related applications(s) filed under 37 CFR 1.53(d). This license is not retroactive.

The grant of a license does not in any way lessen the responsibility of a licensee for the security of the subject matter as imposed by any Government contract or the provisions of existing laws relating to espionage and the national security or the export of technical data. Licensees should apprise themselves of current regulations especially with respect to certain countries, of other agencies, particularly the Office of Defense Trade Controls, Department of State (with respect to Arms, Munitions and Implements of War (22 CFR 121-128)); the Office of Export Administration, Department of Commerce (15 CFR 370.10 (j)); the Office of Foreign Assets Control, Department of Treasury (31 CFR Parts 500+) and the Department of Energy.

NOT GRANTED

No license under 35 U.S.C. 184 has been granted at this time, if the phrase "IF REQUIRED, FOREIGN FILING LICENSE GRANTED" DOES NOT appear on this form. Applicant may still petition for a license under 37 CFR 5.12, if a license is desired before the expiration of 6 months from the filing date of the application. If 6 months has lapsed from the filing date of this application and the licensee has not received any indication of a secrecy order under 35 U.S.C. 181, the licensee may foreign file the application pursuant to 37 CFR 5.15(b).

UNITED STATES PATENT AND TRADEMARK OFFICE

UNITED STATES DEPARTMENT OF COMMERCE
United States Patent and Trademark Office
Address: COMMISSIONER FOR PATENTS
P.O. Box 1450
Alexandria, Virginia 22313-1450
www.uspto.gov

APPL NO.	FILING OR 371 (c) DATE	ART UNIT	FIL FEE REC'D	ATTY.DOCKET NO	DRAWINGS	TOT CLMS	IND CLMS
10/897,344	07/21/2004	2818	770	04487 /LH	8	16	2

CONFIRMATION NO. 9564

CORRECTED FILING RECEIPT

OC000000014795413

01933
FRISHAUF, HOLTZ, GOODMAN & CHICK, PC
767 THIRD AVENUE
25TH FLOOR
NEW YORK, NY 10017-2023

Date Mailed: 12/20/2004

Receipt is acknowledged of this regular Patent Application. It will be considered in its order and you will be notified as to the results of the examination. Be sure to provide the U.S. APPLICATION NUMBER, FILING DATE, NAME OF APPLICANT, and TITLE OF INVENTION when inquiring about this application. Fees transmitted by check or draft are subject to collection. Please verify the accuracy of the data presented on this receipt. **If an error is noted on this Filing Receipt, please write to the Office of Initial Patent Examination's Filing Receipt Corrections, facsimile number 703-746-9195. Please provide a copy of this Filing Receipt with the changes noted thereon. If you received a "Notice to File Missing Parts" for this application, please submit any corrections to this Filing Receipt with your reply to the Notice. When the USPTO processes the reply to the Notice, the USPTO will generate another Filing Receipt incorporating the requested corrections (if appropriate).**

Applicant(s)

Osamu Masuda, Tokyo, JAPAN;
Kazumi Furuta, Tokyo, JAPAN;
Kunito Hayashi, Tokyo, JAPAN;
Kazuhiko Kobayashi, Tokyo, JAPAN;

Assignment For Published Patent Application

KONICA MINOLTA HOLDINGS, INC., Tokyo, JAPAN
CRESTEC CORPORATION, Hachioji-shi, JAPAN

Power of Attorney:

Herbert Goodman–17081
Leonard Holtz–22974
Marshall Chick–26853
Richard Barth–28180
Douglas Holtz–33902
Robert Michal–35614

Domestic Priority data as claimed by applicant

Foreign Applications

JAPAN 2003-201320 07/24/2003

If Required, Foreign Filing License Granted: 09/14/2004

The country code and number of your priority application, to be used for filing abroad under the Paris Convention, is US10/897,344

Projected Publication Date: 01/27/2005

Non-Publication Request: No

Early Publication Request: No

Title

Electron-beam writing device and electron-beam writing method

Preliminary Class

365

LICENSE FOR FOREIGN FILING UNDER
Title 35, United States Code, Section 184
Title 37, Code of Federal Regulations, 5.11 & 5.15

GRANTED

The applicant has been granted a license under 35 U.S.C. 184, if the phrase "IF REQUIRED, FOREIGN FILING LICENSE GRANTED" followed by a date appears on this form. Such licenses are issued in all applications where the conditions for issuance of a license have been met, regardless of whether or not a license may be required as set forth in 37 CFR 5.15. The scope and limitations of this license are set forth in 37 CFR 5.15(a) unless an earlier license has been issued under 37 CFR 5.15(b). The license is subject to revocation upon written notification. The date indicated is the effective date of the license, unless an earlier license of similar scope has been granted under 37 CFR 5.13 or 5.14.

This license is to be retained by the licensee and may be used at any time on or after the effective date thereof unless it is revoked. This license is automatically transferred to any related applications(s) filed under 37 CFR 1.53(d). This license is not retroactive.

The grant of a license does not in any way lessen the responsibility of a licensee for the security of the subject matter as imposed by any Government contract or the provisions of existing laws relating to espionage and the national security or the export of technical data. Licensees should apprise themselves of current regulations especially with respect to certain countries, of other agencies, particularly the Office of Defense Trade Controls, Department of State (with respect to Arms, Munitions and Implements of War (22 CFR 121-128)); the Office of Export Administration, Department of Commerce (15 CFR 370.10 (j)); the Office of Foreign Assets Control, Department of Treasury (31 CFR Parts 500+) and the Department of Energy.

NOT GRANTED

No license under 35 U.S.C. 184 has been granted at this time, if the phrase "IF REQUIRED, FOREIGN FILING LICENSE GRANTED" DOES NOT appear on this form. Applicant may still petition for a license under 37 CFR 5.12, if a license is desired before the expiration of 6 months from the filing date of the application. If 6 months has lapsed from the filing date of this application and the licensee has not received any indication of a secrecy order under 35 U.S.C. 181, the licensee may foreign file the application pursuant to 37 CFR 5.15(b).

UNITED STATES PATENT AND TRADEMARK OFFICE

Commissioner for Patents
United States Patent and Trademark Office
P.O. Box 1450
Alexandria, VA 22313-1450
www.uspto.gov

STALLMAN & POLLOCK LLP
353 SACRAMENTO STREET
SUITE 2200
SAN FRANCISCO CA 94111

COPY MAILED
SEP 0 5 2006
OFFICE OF PETITIONS

In re Application of :
John L. Nightingale et al :
Application No. 10/897,352 : ON PETITION
Filed: July 22, 2004 :
Attorney Docket No. ALTU-410 :

This is a decision on the petition, filed August 28, 2006, under 37 CFR 1.313(c)(2) to withdraw the above-identified application from issue after payment of the issue fee.

The petition is **GRANTED**.

The above-identified application is withdrawn from issue for consideration of a submission under 37 CFR 1.114 (request for continued examination). See 37 CFR 1.313(c)(2).

Petitioner is advised that the issue fee paid on August 18, 2006, in the above-identified application cannot be refunded. If, however, the above-identified application is again allowed, petitioner may request that it be applied towards the issue fee required by the new Notice of Allowance.[1]

Telephone inquiries should be directed to the undersigned at (571) 272-3208.

The examiner of Technology Center AU 3739 will consider the request for continued examination under 37 CFR 1.114.

Karen Creasy

Karen Creasy
Petitions Examiner
Office of Petitions

---

[1] The request to apply the issue fee to the new Notice may be satisfied by completing and returning the new Issue Fee Transmittal Form PTOL-85(b), which includes the following language thereon: "Commissioner for Patents is requested to apply the Issue Fee and Publication Fee (if any) or re-apply any previously paid issue fee to the application identified above." Petitioner is advised that, whether a fee is indicated as being due or not, the Issue Fee Transmittal Form **must** be completed and timely submitted to avoid abandonment. Note the language in bold text on the first page of the Notice of Allowance and Fee(s) Due (PTOL-85).

UNITED STATES PATENT AND TRADEMARK OFFICE

Commissioner for Patents
United States Patent and Trademark Office
P.O. Box 1450
Alexandria, VA 22313-1450
www.uspto.gov

BRIGGS AND MORGAN P.A.
2200 IDS CENTER
80 SOUTH 8TH ST
MINNEAPOLIS MN 55402

COPY MAILED

APR 2 6 2007

OFFICE OF PETITIONS

In re Application of

TRIPP, Thomas W.
Application No. 10/897,358
Filed: July 23, 2004
Attorney Docket No. **33160.8**

DECISION ON PETITION
TO WITHDRAW
FROM RECORD

This is a decision on the Request to Withdraw as attorney or agent of record under 37 C.F.R. § 1.36(b), filed February 22, 2007.

The request is **APPROVED**.

A grantable request to withdraw as attorney/agent of record must be signed by every attorney/agent seeking to withdraw or contain a clear indication that one attorney is signing on behalf of another/others. A request to withdraw will not be approved unless at least 30 (thirty) days would remain between the date of approval and the later of the expiration date of a time to file a response or the expiration date of the maximum time period which can be extended under 37 C.F.R. § 1.136(a).

The request was signed by Gerald E. Helget on behalf of all attorneys of record who are associated with customer No. 32300. All attorneys/agents associated have been withdrawn. Applicant is reminded that there is no attorney of record at this time.

The request to change the correspondence of record is not acceptable as the requested correspondence address is not that of: (1) the first named signing inventor; or (2) an intervening assignee of the entire interest under 37 C.F.R 3.71. All future communications from the Office will be directed to the first named signing inventor.

There are no outstanding office actions at this time.

Telephone inquiries concerning this decision should be directed to Michelle R. Eason at 571-272-4231.

T. Williams

Terri Williams
Petitions Examiner
Office of Petitions

cc: **THOMAS W. TRIPP**
2150 CLIFF ROAD EAST
#217
BURNSVILLE, MN 55337

cc: **KEITH D. JOHNSON, P.L.L.C.**
BARRISTERS TRUST BUILDING
247 THIRD AVENUE SOUTH
MINNEAPOLIS, MN 55415

UNITED STATES PATENT AND TRADEMARK OFFICE

Commissioner for Patents
United States Patent and Trademark Office
P.O. Box 1450
Alexandria, VA 22313-1450
www.uspto.gov

GOODWIN PROCTER LLP
135 COMMONWEALTH DRIVE
MENLO PARK CA 94025

COPY MAILED

FEB 24 2009

OFFICE OF PETITIONS

In re Application of
Luc Desnoyers et al.
Application No. 10/897,359
Filed: July 21, 2004
Attorney Docket No. 39780-2630 P1C15C1

DECISION ON PETITION

This is a decision on the petition under the unintentional provisions of 37 CFR 1.137(b), filed July 30, 2008, to revive the above-identified application.

The petition is **GRANTED**.

The application became abandoned for failure to reply in a timely manner to the non-final Office action mailed, November 1, 2007, which set a shortened statutory period for reply of three (3) months. No extensions of time under the provisions of 37 CFR 1.136(a) were obtained. Accordingly, the application became abandoned on February 2, 2008.

The petition satisfies the requirements of 37 CFR 1.137(b) in that petitioner has supplied (1) the reply in the form of an amendment, (2) the petition fee of $1,540, and (3) a proper statement of unintentional delay.

It is not apparent whether the statement of unintentional delay was signed by a person who would have been in a position of knowing that the entire delay in filing the required reply from the due date for the reply until the filing of a grantable petition pursuant to 37 CFR 1.137(b) was unintentional. Nevertheless, in accordance with 37 CFR 10.18, the statement is accepted as constituting a certification of unintentional delay. However, in the event that petitioner has no knowledge that the delay was unintentional, petitioner must make such an inquiry to ascertain that, in fact, the delay was unintentional. If petitioner discovers that the delay was intentional, petitioner must so notify the Office.

There is no indication that the person signing the instant petition was ever given a power of attorney or authorization of agent to prosecute the above-identified application. In accordance with 37 CFR 1.34(a), the signature appearing on the petition shall constitute a representation to the United States Patent and Trademark Office that he/she is authorized to represent the particular party in whose behalf he/she acts. However, if petitioner desires to receive future correspondence regarding this application, the appropriate power of attorney or authorization of agent must be submitted.

An extension of time under 37 CFR 1.136 must be filed prior to the expiration of the maximum extendable period for reply. *See* In re Application of S., 8 USPQ2d 1630, 1631 (Comm'r Pats. 1988). Since the $1,050 extension of time fee submitted with the petition on July 30, 2008, was subsequent to the maximum extendable period for reply, this fee is unnecessary and will be credited to petitioner's deposit account.

Telephone inquiries concerning this decision should be directed to JoAnne Burke at (571) 272-4584.

This application is being referred to Technology Center AU 1647 for appropriate action by the Examiner in the normal course of business on the reply received.

Ramesh Krishnamurthy

Ramesh Krishnamurthy
Petitions Examiner
Office of Petitions

UNITED STATES PATENT AND TRADEMARK OFFICE

Commissioner for Patents
United States Patent and Trademark Office
P.O. Box 1450
Alexandria, VA 22313-1450
www.uspto.gov

DOUGLAS D. FEKETE
DELPHI TECHNOLOGIES, INC.
LEGAL STAFF, MAIL CODE: 480-410-202
P.O. BOX 5052
TROY, MI 48007-5052

COPY MAILED

AUG 0 2 2005

OFFICE OF PETITIONS

In re Application of Mostafa Abidi, Remi B. Loevenbruck, Karine Pelletier, Thomas Leonard and Ennio De Biasio Application No. 10/897,376 Filed: July 22, 2004 Title: EVAPORATED FUEL PROCESSING DEVICE	: : : : : : : :	DECISION REFUSING STATUS UNDER 37 CFR 1.47(a)

This is in response to the papers styled, "Petition," filed September 24, 2004, which have been treated as a "Petition Under 37 CFR 1.47(a)." The petition was recently forwarded to this office for review.

The petition is dismissed.

Rule 47 applicant is given TWO MONTHS from the mailing date of this decision to reply, correcting the below-noted deficiencies. Any reply should be entitled "Request for Reconsideration of Petition Under 37 CFR 1.47(a)," and should only address the deficiencies noted below, except that the reply may include an oath or declaration executed by the non-signing inventor. **FAILURE TO RESPOND WILL RESULT IN ABANDONMENT OF THE APPLICATION.** Any extensions of time will be governed by 37 CFR 1.136(a).

The above-identified application was filed on July 22, 2004 without an executed oath or declaration and naming Mostafa Abidi, Remi B. Loevenbruck, Karine Pelletier, Thomas Leonard and Ennio De Biasio as joint inventors.

Accordingly, on September 15, 2004, a "Notice to File Missing Parts of Application" was mailed, requiring an executed oath or declaration, filing fee, and surcharge for their late filing.

In response, on September 24, 2004, the instant petition was filed.

A grantable petition under 37 CFR 1.47(a) requires:

> (1) proof that the non-signing inventor cannot be reached or refuses to sign the oath or declaration after having been presented with the application papers (specification, claims and drawings);
>
> (2) an acceptable oath or declaration;
>
> (3) the petition fee; and
>
> (4) a statement of the last known address of the non-signing inventor.

Applicant lacks items (1), (2), and (4), as set forth above.

As to item (1), applicant appears to indicate that the non-signing inventor has not been presented with a copy of the application papers (specification, claims and drawings). Unless the non-signing inventor was presented with a copy of the application papers (specification, claims and drawings), the non-signing inventor could not attest that he has "reviewed and understands the application papers" and therefore could not sign the declaration which he was given. Accordingly, Rule 47 applicant failed to show or provide proof that the inventor has refused to sign the declaration. *See* MPEP 409.03(d). Petitioner should show that a copy of the application papers was presented to the non-signing inventor, but that he did not respond to, or refused, the request that he sign the oath/declaration in order to show that the inventor has refused to join in the application. The proof of the pertinent events should be made by a statement of someone with first hand knowledge of the events.

However, petitioner also states, "A declaration for an earlier-filed United States patent application serial no. 10/826,872 was sent to Mr. Abidi at his last known address and returned as undeliverable," which appears to indicate that the non-signing inventor cannot be found or reached.

Where inability to find or reach a non-signing inventor "after diligent effort" is the reason for filing under 37 CFR 1.47, a statement of facts should be submitted that fully describes the exact facts which are relied on to establish that a diligent effort was made. The statement of facts must be signed, where at all possible, by a person having firsthand knowledge of the facts recited therein. Statements based on hearsay will not normally be accepted. Copies of documentary evidence such as internet searches, telephone directory searches, certified mail return receipts, cover letters of instructions, telegrams, that support a finding that the non-signing inventor could not be found or reached should be made part of the statement. The steps taken to locate the whereabouts of the non-signing inventor should be included statement of facts. It is important that the statement contain facts as opposed to conclusions. *See* MPEP 409.03(d).

As to item (2), the declaration submitted on September 24, 2004 does not identify the application number or filing date. Additionally, the signature block of inventor Mostafa Abidi appears to be crossed out.

As to item (4), a statement of the inventor's last known address is missing and is required. *See* MPEP 409.03(e).

Please note, the petition fee will be charged to deposit account no. 50-0831.

Further correspondence with respect to this matter should be addressed as follows:

By mail: Mail Stop Petition
Commissioner for Patents
Box 1450
Alexandria, VA 22313

By FAX: (571) 273-8300
Attn: Office of Petitions

By hand: Customer Service Window
Randolph Building
401 Dulany Street
Alexandria, VA 22314

Telephone inquiries related to this decision should be directed to the undersigned at (571) 272-3228.

Edward J. Tannouse
Petitions Attorney
Office of Petitions/Patent
United States Patent and Trademark Office

UNITED STATES PATENT AND TRADEMARK OFFICE

Commissioner for Patents
United States Patent and Trademark Office
P.O. Box 1450
Alexandria, VA 22313-1450
www.uspto.gov

DOUGLAS D. FEKETE
DELPHI TECHNOLOGIES, INC.
LEGAL STAFF, MAIL CODE: 480-410-202
P.O. BOX 5052
TROY, MI 48007-5052

COPY MAILED

OCT 18 2005

OFFICE OF PETITIONS

In re Application of Mostafa Abidi, Remi B. Loevenbruck, Karine Pelletier, Thomas Leonard and Ennio De Biasio Application No. 10/897,376 Filed: July 22, 2004 Title: EVAPORATED FUEL PROCESSING DEVICE	: : : : : : : :	DECISION REFUSING STATUS UNDER 37 CFR 1.47(a)

This is in response to the papers styled, "Request For Reconsideration of Petition Under 37 CFR 1.47(a)," filed September 26, 2005.

The petition is dismissed.

Rule 47 applicant is given TWO MONTHS from the mailing date of this decision to reply, correcting the below-noted deficiencies. Any reply should be entitled "Request for Reconsideration of Petition Under 37 CFR 1.47(a)," and should only address the deficiencies noted below, except that the reply may include an oath or declaration executed by the non-signing inventor. **FAILURE TO RESPOND WILL RESULT IN ABANDONMENT OF THE APPLICATION.** Any extensions of time will be governed by 37 CFR 1.136(a).

The above-identified application was filed on July 22, 2004 without an executed oath or declaration and naming Mostafa Abidi, Remi B. Loevenbruck, Karine Pelletier, Thomas Leonard and Ennio De Biasio as joint inventors.

Accordingly, on September 15, 2004, a "Notice to File Missing Parts of Application" was mailed, requiring an executed oath or declaration, filing fee, and surcharge for their late filing.

In response, on September 24, 2004, the original petition was filed.

A grantable petition under 37 CFR 1.47(a) requires:

(1) proof that the non-signing inventor cannot be reached or refuses to sign the oath or declaration after having been presented with the application papers (specification, claims and drawings);

(2) an acceptable oath or declaration;

(3) the petition fee; and

(4) a statement of the last known address of the non-signing inventor.

Applicant lacks item (2), as set forth above.

As to item (2), the declaration submitted on September 26, 2005 is not executed by any of the inventors.

Further correspondence with respect to this matter should be addressed as follows:

By mail: Mail Stop Petition
Commissioner for Patents
Box 1450
Alexandria, VA 22313

By FAX: (571) 273-8300
Attn: Office of Petitions

By hand: Customer Service Window
Randolph Building
401 Dulany Street
Alexandria, VA 22314

Telephone inquiries related to this decision should be directed to the undersigned at (571) 272-3228.

Edward J. Tannouse
Petitions Attorney
Office of Petitions
Office of the Deputy Commissioner
for Patent Examination Policy

UNITED STATES PATENT AND TRADEMARK OFFICE

Commissioner for Patents
United States Patent and Trademark Office
P.O. Box 1450
Alexandria, VA 22313-1450
www.uspto.gov

DOUGLAS D. FEKETE
DELPHI TECHNOLOGIES, INC.
LEGAL STAFF, MAIL CODE: 480-410-202
P.O. BOX 5052
TROY, MI 48007-5052

COPY MAILED

JAN 11 2006

OFFICE OF PETITIONS

In re Application of	:	
Mostafa Abidi, Remi B. Loevenbruck,	:	
Karine Pelletier, Thomas Leonard and	:	
Ennio De Biasio	:	
Application No. 10/897,376	:	DECISION GRANTING PETITION
Filed: July 22, 2004	:	UNDER 37 CFR 1.47(a)
For: EVAPORATED FUEL PROCESSING	:	
DEVICE	:	

This is in response to the "Request For Reconsideration of Petition Under 37 CFR 1.47(a)," filed December 21, 2005.

The petition is **granted**.

Petitioner has shown that non-signing inventor Mostafa Abidi cannot be found or located to join in the filing of the above-identified application.

The above-identified application and papers have been reviewed and found in compliance with 37 CFR 1.47(a). This application is hereby accorded Rule 1.47(a) status. As provided in Rule 1.47(c), this Office will forward notice of this application's filing to the non-signing inventor at the address given in the petition. Notice of the filing of this application will also be published in the Official Gazette.

The file is being forwarded to Technology Center 1700 for examination *in due course.*

Telephone inquiries regarding this decision should be directed to the undersigned at (571) 272-3228.

Edward J. Tannouse
Petitions Attorney
Office of Petitions
Office of the Deputy Commissioner
for Patent Examination Policy

UNITED STATES PATENT AND TRADEMARK OFFICE

Commissioner for Patents
United States Patent and Trademark Office
P.O. Box 1450
Alexandria, VA 22313-1450
www.uspto.go

MOSTAFA ABIDI
9, RUE GUIDO OPPENHEIM
2263
LUXEMBOURG

COPY MAILED

JAN 11 2006

OFFICE OF PETITIONS

In re Application of
Mostafa Abidi, Remi B. Loevenbruck, Karine Pelletier,
Thomas Leonard and Ennio De Biasio
Application No. 10/897,376
Filed: July 22, 2004
For: EVAPORATED FUEL PROCESSING DEVICE

Dear MOSTAFA ABIDI:

You are named as a joint inventor in the above identified United States patent application, filed under the provisions of 35 U.S.C. 116 (United States Code), and 37 CFR 1.47(a), Rules of Practice in Patent Cases. Should a patent be granted on the application you will be designated therein as a joint inventor.

As a named inventor you are entitled to inspect any paper in the file wrapper of the application, order copies of all or any part thereof (at a prepaid cost per 37 CFR 1.19) or make your position of record in the application. Alternatively, you may arrange to do any of the preceding through a registered patent attorney or agent presenting written authorization from you. If you care to join the application, counsel of record (see below) would presumably assist you. Joining in the application would entail the filing of an appropriate oath or declaration by you pursuant to 37 CFR 1.63.

Telephone inquiries regarding this communication should be directed to the undersigned at (571) 272-3228. Requests for information regarding your application should be directed to the File Information Unit at (703) 308-2733. Information regarding how to pay for and order a copy of the application, or a specific paper in the application, should be directed to Certification Division at (703) 308-9726 or 1 (800) 972-6382 (outside the Washington D.C. area).

Edward J. Tannouse
Petitions Attorney
Office of Petitions
Office of the Deputy Commissioner
for Patent Examination Policy

DOUGLAS D. FEKETE
DELPHI TECHNOLOGIES, INC.
LEGAL STAFF, MAIL CODE: 480-410-202
P.O. BOX 5052
TROY, MI 48007-5052

UNITED STATES PATENT AND TRADEMARK OFFICE

Commissioner for Patents
United States Patent and Trademark Office
P.O. Box 1450
Alexandria, VA 22313-1450
www.uspto.gov

NEKTAR THERAPEUTICS
201 INDUSTRIAL ROAD
SAN CARLOS CA 94070

MAILED

APR 27 2009

OFFICE OF PETITIONS

In re Application of
Samuel P. McManus et al
Application No. 10/897,386
Filed: July 22, 2004
Attorney Docket No. SHE0084.00

DECISION ON PETITION

This is a decision on the petition under the unintentional provisions of 37 CFR 1.137(b), filed March 16, 2009, to revive the above-identified application.

The petition is **GRANTED**.

The petition satisfies the conditions for revival pursuant to the provisions of 37 CFR 1.137(b) in that (1) the reply in the form of an RCE and an amendment; (2) the petition fee; and (3) the required statement of unintentional delay have been received. Accordingly, the reply received March 16, 2009, is accepted as having been unintentionally delayed.

An extension of time under 37 CFR 1.136 must be filed prior to the expiration of the maximum extendable period for reply. *See* In re Application of S., 8 USPQ2d 1630, 1631 (Comm'r Pats. 1988). Since the $1,180.00 extension of time fee submitted with the petition on March 16, 2009 was subsequent to the maximum extendable period for reply, this fee is unnecessary and will be credited to petitioner's deposit account.

Telephone inquiries concerning this decision should be directed to the undersigned at (571) 272-3208.

This application is being referred to Technology Center AU 1796 for appropriate action by the Examiner in the normal course of business on the reply received March 16, 2009.

Karen Creasy

Karen Creasy
Petitions Examiner
Office of Petitions

UNITED STATES PATENT AND TRADEMARK OFFICE

COMMISSIONER FOR PATENTS
UNITED STATES PATENT AND TRADEMARK OFFICE
P.O. BOX 1450
ALEXANDRIA, VA 22313-1450
www.uspto.gov

DELPHINE M. JAMES
STE. 170
2656 SOUTH LOOP WEST
HOUSTON, TX 77054

COPY MAILED

NOV 09 2005

OFFICE OF PETITIONS

In re Application of
Bobby D. Bailiff et al
Application No. 10/897,391
Filed: April 21, 2004
Attorney Docket No. DMJ20040302

DECISION ON PETITION
TO MAKE SPECIAL UNDER
37 CFR 1.102(c)(1)

This is a decision on the petition under 37 CFR 1.102(c)(1), filed September 29, 2005, to make the above-identified application special based on applicant's health and age as set forth in M.P.E.P. § 708.02, Sections III and IV.

The petition is **DISMISSED**.

A grantable petition to make an application special under 37 CFR 1.102(c)(1) and MPEP § 708.02, Section III: Applicant's Health, must be accompanied by evidence, such as a doctor's certificate or other medical certificate, showing that the state of health of the applicant is such that he or she might not be available to assist in the prosecution of the application if it were to run its normal course. Section IV: Applicant's Age, must be accompanied by evidence showing that at least one of the applicants is 65 years of age, or more, such as a birth certificate or a statement by applicant. No fee is required.

The instant petition includes a medical certificate from Michael W. Hart, M.D. attesting to the fact that Bobby D. Bailiff is suffering from hypertension, artery fibrillation, hypercholesterolemia, coronary artery disease and other diseases. It is not clear from the evidence that Bobby Bailiff might not be able to assist in the prosecution of the application due to the diagnosed diseases. Michael W. Hart, M.D. should explain how the diagnosed diseases will hamper him from assisting in the prosecution of this application should he wish to continue to attempt to have this application be placed in special status.

Accordingly, the petition is dismissed as failing to present sufficient evidence of a medical condition which would prevent applicant from assisting in prosecution of the instant application as set forth above.

In addition, the petition includes a statement executed by Delphine M. James on behalf of the named inventors, stating that one of the named inventors is over 65 years of age. Delphine M. James is not one of the named applicants and the petition does not include evidence of age.

Accordingly, the petition is dismissed as failing to present sufficient evidence that applicant is 65 years of age or more.

Further correspondence with respect to this matter should be addressed as follows:

By Mail: Mail Stop PETITION
Commissioner for Patents
P. O. Box 1450
Alexandria, VA 22313-1450

By hand: U. S. Patent and Trademark Office
Customer Service Window, Mail Stop Petitions
Randolph Building
401 Dulany Street
Alexandria, VA 22314

By FAX: (571) 273-8300

Telephone inquiries concerning this decision should be directed to Wan Laymon at 571-272-3220.

All other inquiries concerning either the examination or status of the application should be directed to the Technology Center.

This matter is being referred to Technology Center Art Unit 2633 for action in its regular turn.

Amelia Au
Petitions Examiner
Office of Petitions

UNITED STATES PATENT AND TRADEMARK OFFICE

Commissioner for Patents
United States Patent and Trademark Office
P.O. Box 1450
Alexandria, VA 22313-1450
www.uspto.gov

DELPHINE M. JAMES
STE. 170
2656 SOUTH LOOP WEST
HOUSTON, TX 77054

COPY MAILED

JAN 23 2006

OFFICE OF PETITIONS

In re Application of	:	
Bobby D. Bailiff et al	:	DECISION ON PETITION
Application No. 10/897,391	:	TO MAKE SPECIAL UNDER
Filed: April 21, 2004	:	37 CFR 1.102(c)(1)
Attorney Docket No. DMJ20040302	:	

This is a decision on the renewed petition under 37 CFR 1.102(c)(1), filed December 21, 2005, to make the above-identified application special based on applicant's health and age as set forth in M.P.E.P. § 708.02, Sections III and IV.

The petition is **DISMISSED**.

Any request for reconsideration must be filed within TWO MONTHS of the date of this decision and signed by a person authorized to sign under 37 CFR 1.102. Extensions of time under 37 CFR 1.136(a) are permitted. Should petitioner desire reconsideration, he should submit a renewed petition which addresses the deficiency noted below.

A grantable petition to make an application special under 37 CFR 1.102(c)(1) and MPEP § 708.02, Section III: Applicant's Health, must be accompanied by evidence, such as a doctor's certificate or other medical certificate, showing that the state of health of the applicant is such that he or she might not be available to assist in the prosecution of the application if it were to run its normal course. Section IV: Applicant's Age, must be accompanied by evidence showing that at least one of the applicants is 65 years of age, or more, such as a birth certificate or a statement by applicant. No fee is required.

The renewed petition still has not satisfied the requirements as set forth in M.P.E.P. § 708.02, Section III, basically for the same reasons stated in the decision mailed November 9, 2005. In this regard, Michael W. Hart, M.D. attesting to the fact that Bobby D. Bailiff is suffering from hypertension, artery fibrillation, hypercholesterolemia, coronary artery disease and other diseases. It is still not clear from the evidence that Bobby Bailiff might not be able to assist in the prosecution of the application due to the diagnosed diseases. Further, the renewed petition is not signed by a person authorized to sign under 37 CFR 1.102.

Accordingly, the petition is dismissed as: 1) failing to present sufficient evidence of a medical

condition which would prevent applicant from assisting in prosecution of the instant application; 2) the petition was not signed by a person authorized to sign.

In addition, the renewed petition includes a statement executed by Michael W. Hart, M.D. on behalf of Bobby Bailiff, stating that Bobby Bailiff is over 65 years of age. Michael W. Hart, M.D. is not the applicant and no other evidence, as indicated in M.P.E.P. § 708.02, Section IV above, was provided to support the petition.

Accordingly, the petition is dismissed as failing to present sufficient evidence that applicant is 65 years of age or more.

Further correspondence with respect to this matter should be addressed as follows:

By Mail: Mail Stop PETITION
Commissioner for Patents
P. O. Box 1450
Alexandria, VA 22313-1450

By hand: U. S. Patent and Trademark Office
Customer Service Window, Mail Stop Petitions
Randolph Building
401 Dulany Street
Alexandria, VA 22314

By FAX: (571) 273-8300

Telephone inquiries concerning this decision should be directed to Wan Laymon at 571-272-3220.

All other inquiries concerning either the examination or status of the application should be directed to the Technology Center.

This matter is being referred to Technology Center Art Unit 1746 for action in its regular turn.

Amelia Au
Petitions Examiner
Office of Petitions

UNITED STATES PATENT AND TRADEMARK OFFICE

Commissioner for Patents
United States Patent and Trademark Office
P.O. Box 1450
Alexandria, VA 22313-1450
www.uspto.gov

DELPHINE M. JAMES
STE. 170
2656 SOUTH LOOP WEST
HOUSTON, TX 77054

COPY MAILED

MAY 3 1 2006

OFFICE OF PETITIONS

In re Application of	:	
Bobby D. Bailiff et al	:	
Application No. 10/897,391	:	DECISION ON PETITION
Filed: April 21, 2004	:	TO MAKE SPECIAL UNDER
Attorney Docket No. DMJ20040302	:	37 CFR 1.102(c)(1)
	:	

This is a decision on the papers filed March 22, 2006, March 28, 2006 and April 10, 2006, which is being treated as a renewed petition under 37 CFR 1.102(c)(1), to make the above-identified application special based on applicant's health as set forth in M.P.E.P. § 708.02, Section III.

The petition is **DISMISSED**.

Any request for reconsideration must be filed within **TWO (2) MONTHS** of the date of this decision and signed by a person authorized to sign under 37 CFR 1.102. Extensions of time under 37 CFR 1.136(a) are permitted. Should petitioner desire reconsideration, he should submit a renewed petition which addresses the deficiency noted below.

A grantable petition to make an application special under 37 CFR 1.102(c)(1) and MPEP § 708.02, Section III: Applicant's Health, must be accompanied by evidence, such as a doctor's certificate or other medical certificate, showing that the state of health of the applicant is such that he or she might not be available to assist in the prosecution of the application if it were to run its normal course. No fee is required.

The renewed petition still has not satisfied the requirements as set forth in M.P.E.P. § 708.02, Section III, basically for the same reasons stated in the decisions mailed November 9, 2005 and January 23, 2006. In this regard, Michael W. Hart, M.D. attesting to the fact that due to Mr. Bailiff's frail health, a pacemaker is required. It is still not clear from the evidence that Mr. Bailiff might not be able to assist in the prosecution of the application due to the diagnosed disease. Further, the renewed petition is **not** signed by a person authorized to sign under 37 CFR 1.102.

Accordingly, the petition is dismissed as: 1) failing to present sufficient evidence of a medical condition which would prevent applicant from assisting in prosecution of the instant application; 2) the petition was not signed by a person authorized to sign.

Telephone inquiries concerning this decision should be directed to Wan Laymon at 571-272-3220.

All other inquiries concerning either the examination or status of the application should be directed to the Technology Center.

This application is being referred to Technology Center AU 1746 for action on the merits commensurate with this decision.

Denise Pothier
Petitions Examiner
Office of Petitions

UNITED STATES PATENT AND TRADEMARK OFFICE

Commissioner for Patents
United States Patent and Trademark Office
P.O. Box 1450
Alexandria, VA 22313-1450
www.uspto.gov

DELPHINE M. JAMES
STE. 170
2656 SOUTH LOOP WEST
HOUSTON, TX 77054

COPY MAILED

NOV 1 5 2006

OFFICE OF PETITIONS

In re Application of	:	
Bobby D. Bailiff et al	:	
Application No. 10/897,391	:	DECISION ON PETITION
Filed: April 21, 2004	:	TO MAKE SPECIAL UNDER
Attorney Docket No. DMJ20040302	:	37 CFR 1.102(c)(1)
	:	

This is a decision on the petition under 37 CFR 1.102(c)(1), filed June 29, 2006 and supplemented on August 30, 2006, to make the above-identified application special based on applicant's age as set forth in M.P.E.P. § 708.02, Section IV.

The petition is **GRANTED**.

A grantable petition to make an application special under 37 CFR 1.102(c)(1) and MPEP § 708.02, Section IV: Applicant's Age must be accompanied by evidence showing that at least one of the applicants is 65 years of age, or more, such as a birth certificate or a statement by applicant. No fee is required

The instant petition includes a copy of Inventor Bobby D. Bailiff's birth certificate showing that he is over 65 years of age. Accordingly, the above-identified application has been accorded "special" status.

Telephone inquiries concerning this decision should be directed to Irvin Dingle at 571-272-3210.

All other inquiries concerning either the examination or status of the application should be directed to the Technology Center.

The application is being forwarded to the Technology Center Art Unit 1746 for action on the merits commensurate with this decision.

Irvin Dingle
Petitions Examiner
Office of Petitions

UNITED STATES PATENT AND TRADEMARK OFFICE

Commissioner for Patents
United States Patent and Trademark Office
P.O. Box 1450
Alexandria, VA 22313-1450
www.uspto.gov

DELPHINE M. JAMES
STE. 170, 2656 SOUTH LOOP WEST
HOUSTON, TX 77054

COPY MAILED

NOV 1 3 2008

OFFICE OF PETITIONS

In re Application of	:	
Bobby D. BALIFF, et al	:	
Application No. 10/897,391	:	DECISION ON PETITION
Filed: April 21, 2004	:	TO MAKE SPECIAL UNDER
Attorney Docket No. DMJ2004302	:	37 CFR 1.102(c)(1)
	:	

This is a decision on the petition under 37 CFR 1.102(c)(1), filed September 17, 2008, to make the above-identified application special based on applicant's age as set forth in M.P.E.P. § 708.02, Section IV.

The petition is **DISMISSED** as moot.

The petition filed in the above-identified application is dismissed as moot because the current status does not require special processing.

Telephone inquiries concerning this decision should be directed to the undersigned at 571-272-6735.

Diane Goodwyn
Petitions Examiner
Office of Petitions

UNITED STATES DEPARTMENT OF COMMERCE
Patent and Trademark Office
ASSISTANT SECRETARY OF COMMERCE AND
COMMISSIONER OF PATENTS AND TRADEMARKS
Washington, DC 20231

6/8/05

Patent No. :7491478
Inventor(s) :Buurman et al.
Issued : 2/17/2009
Title : LITHOGRAPHIC APPARATUS AND DEVICE MANUFACTURING METHOD
Atty.doc./File No.

Request for Certificates of Correction

Consideration has been given to your request for the issuance of a Certificate of Correction, for the above – identified patent under the provisions of CFR 1.322.

Inspection of the application for the patent reveals the 1449 is printed in accordance with the record. Therefore being no fault on the Patent and Trademark Office, It has no authority to issue a certificate of correction under the provision of 1.322.

In view of the forgoing, your request in this matter, is hereby denied.

Future written correspondence concerning this matter should be filed and directed to Decisions & Certificates of Correction Branch.

Henry Randall
Decisions & Certificates
of Correction Branch
(703) 756-1571

PILLSBURY WINTHROP SHAW PITTMAN LLP
P.O. BOX 10500
MCLEAN, VA 22102

HR

UNITED STATES PATENT AND TRADEMARK OFFICE

Commissioner for Patents
United States Patent and Trademark Office
P.O. Box 1450
Alexandria, VA 22313-1450
www.uspto.gov

COPY MAILED

NOV 03 2008

OFFICE OF PETITIONS

Posz Law Group, PLC
12040 South Lakes Drive
Suite 101
Reston, VA 20191

In re Application of	:	
Kurt D'Mello et al.	:	
Application No. 10/897,399	:	DECISION ON PETITION
Filed: July 23, 2004	:	TO WITHDRAW
Attorney Docket No. 57T-099	:	FROM RECORD
	:	

This is a decision on the Request to Withdraw as attorney or agent under 37 C.F.R. § 1.36(b) or 37 C.F.R. § 10.40 filed October 10, 2008.

The request is **APPROVED**.

A grantable request to withdraw as attorney/agent of record must be signed by every attorney/agent seeking to withdraw or contain a clear indication that one attorney is signing on behalf of another/others. The Office requires the practitioner(s) requesting withdrawal to certify that he, she, or they have: (1) given reasonable notice to the client, prior to the expiration of the response period, that the practitioner(s) intends to withdraw from employment; (2) delivered to the client or a duly authorized representative of the client all papers and property (including funds) to which the client is entitled; and (3) notified the client of any responses that may be due and the time frame within which the client must respond, pursuant 37 CFR 10.40(c).

The request was signed by Cynthia K. Nicholson on behalf of all attorneys/agents associated with customer number 23400. All attorneys/agents associated with customer number 23400 have been withdrawn.

Applicant is reminded that there is no attorney of record at this time.

The correspondence address has been changed and is copied below.

The power of attorney filed on March 28, 2006 was improperly accepted by the Office on April 17, 2006. In order to request or take action in a patent matter, the assignee must establish its ownership of the patent to the satisfaction of the Director. In this regard, a Statement under 37 CFR 3.73(b) must have either: (i) documentary evidence of a chain of title from the original owner to the assignee (*e.g.*, copy of an executed assignment), and a statement affirming that the documentary evidence of the chain of title from the original owner to the assignee was or concurrently is being submitted for recordation pursuant to § 3.11; or (ii) a statement specifying where documentary evidence of a chain of title from the original owner to the assignee is recorded in the assignment records of the Office (*e.g.*, reel and frame number). To correct the application file please submit a proper statement under 37 CFR 3.73(b).

Telephone inquiries concerning this decision should be directed to Kimberly Inabinet at 571-272-4618.

Kimberly Inabinet
Petitions Examiner
Office of Petitions

cc: Secure Elements, Inc.
198 Van Buren Street, Suite 110
Herndon, VA 20170

UNITED STATES PATENT AND TRADEMARK OFFICE

UNITED STATES DEPARTMENT OF COMMERCE
United States Patent and Trademark Office
Address: COMMISSIONER FOR PATENTS
P.O. Box 1450
Alexandria, Virginia 22313-1450
www.uspto.gov

APPLICATION NUMBER	FILING OR 371(C) DATE	FIRST NAMED APPLICANT	ATTY. DOCKET NO./TITLE
10/897,399	07/23/2004	Kurt D'Mello	57T-009

CONFIRMATION NO. 1032

POWER OF ATTORNEY NOTICE

23400
POSZ LAW GROUP, PLC
12040 SOUTH LAKES DRIVE
SUITE 101
RESTON, VA 20191

OC000000032906371

Date Mailed: 10/31/2008

NOTICE REGARDING CHANGE OF POWER OF ATTORNEY

This is in response to the Power of Attorney filed 10/10/2008.

- The withdrawal as attorney in this application has been accepted. Future correspondence will be mailed to the new address of record. 37 CFR 1.33.

/kainabinet/

Office of Data Management, Application Assistance Unit (571) 272-4000, or (571) 272-4200, or 1-888-786-0101

UNITED STATES PATENT AND TRADEMARK OFFICE

Commissioner for Patents
United States Patent and Trademark Office
P.O. Box 1450
Alexandria, VA 22313-1450
www.uspto.gov

FITCH EVEN TABIN AND FLANNERY
120 SOUTH LA SALLE STREET
SUITE 1600
CHICAGO IL 60603-3406

COPY MAILED

NOV 19 2004

OFFICE OF PETITIONS

In re Application of	:
Eric D. Clamage	:
Application No. 10/897,401	: DECISION ACCORDING STATUS
Filed: July 23, 2004	: UNDER 37 CFR 1.47(b)
Attorney Docket No. 1410/77102	:

This decision is in response th the petition filed November 9, 2004 under 37 CFR 1.47(b).

The petition is **GRANTED**.

The above-identified application was filed July 23, 2004 naming Eric D. Clamage as the sole inventor but without an executed Oath or Declaration. A Notice to File Missing Parts was mailed September 15, 2004 and in response, the instant petition was filed. The petition claims that the inventor has been provided with a copy of the application but that he has verbally refused to execute the Oath or Declaration.

A grantable petition under 37 CFR 1.47(b) requires:

(1) proof that the non-signing inventor cannot be reached or refuses to sign the oath or declaration after having been presented with the application papers (specification, claims and drawings);

(2) an acceptable oath or declaration in compliance with 35 U.S.C. §§ 115 and 116;

(3) the petition fee;

(4) a statement of the last known address of the non-signing inventor;

(5) proof of proprietary interest, and

(6) proof of irreparable damage.

Petitioners have shown that the application papers were delivered to the last known address for the sole inventor, that the sole inventor verbally refused to execute the oath or declaration. Additionally, petitioners have included the last known address for Mr. Clamage, have shown proprietary interest by providing a copy of the "Employment Agreement" between the nonsigning inventor and Kraft Foods Global, which shows that the inventor had an obligation to assign any patent rights to Kraft Foods Global, has

submitted a declaration in compliance with 37 CFR 1.63 and 1.64 and has demonstrated that such action is necessary to prevent irreparable damage.

The above-identified application and papers have been reviewed and found in compliance with 37 CFR 1.47(b). In view thereof, this application is hereby accorded Rule 1.47(b) status.

Thus, as provided in Rule 1.47c, this Office will forward notice of this application's filing to the non-signing inventor at the address given in the petition. Notice of the filing of this application will also be published in the Official Gazette.

The application is being forwarded to Technology Center 3754 for examination in due course.

Telephone inquiries concerning this matter may be directed to the undersigned Petitions Attorney at (571) 272-3212.

Patricia Faison-Ball

Patricia Faison-Ball
Senior Petitions Attorney
Office of Petitions

UNITED STATES PATENT AND TRADEMARK OFFICE

Commissioner for Patents
United States Patent and Trademark Office
P.O. Box 1450
Alexandria, VA 22313-1450
www.uspto.gov

COPY MAILED

NOV 19 2004

OFFICE OF PETITIONS

ERIC D. CLAMAGE
42 HIGHVIEW AVENUE, #6
STAMFORD, CT 06907

In re Application of
Eric D. Clamage
Application No. 10/897,401
Filed: July 23, 2004
Title of Invention: CONTAINER

Dear Mr. Clamage:

You are named as the sole inventor in the above identified United States patent application, filed under the provisions of 35 U.S.C. 116 (United States Code), and 37 CFR 1.47(a), Rules of Practice in Patent Cases. Should a patent be granted on the application you will be designated therein as the sole inventor.

As the named inventor you are entitled to inspect any paper in the file wrapper of the application, order copies of all or any part thereof (at a prepaid cost per 37 CFR 1.19) or make your position of record in the application. Alternatively, you may arrange to do any of the preceding through a registered patent attorney or agent presenting written authorization from you. If you care to join the application, counsel of record (see below) would presumably assist you. Joining in the application would entail the filing of an appropriate oath or declaration by you pursuant to 37 CFR 1.63.

Telephone inquiries regarding this communication should be directed to the undersigned Petitions Attorney at (571) 272-3212. Requests for information regarding your application should be directed to the File Information Unit at 703/308-2733. Information regarding how to pay for and order a copy of the application, or a specific paper in the application, should be directed to Certification Division at 703/308-9726 or 1-800-972-6382 (outside the Washington D.C. area).

Patricia Faison-Ball

Patricia Faison-Ball
Senior Petitions Attorney
Office of Petitions

cc:
FITCH EVEN TABIN AND FLANNERY
120 SOUTH LA SALLE STREET
SUITE 1600
CHICAGO IL 60603-3406

UNITED STATES PATENT AND TRADEMARK OFFICE

UNITED STATES DEPARTMENT OF COMMERCE
United States Patent and Trademark Office
Address: COMMISSIONER FOR PATENTS
P.O. Box 1450
Alexandria, Virginia 22313-1450
www.uspto.gov

FITCH EVEN TABIN & FLANNERY
120 SOUTH LASALLE STREET
SUITE 1600
CHICAGO, IL 60603-3406

Mail Date: 04/21/2010

Applicant	: Eric D. Clamage	: DECISION ON REQUEST FOR
Patent Number	: 7578412	: RECALCULATION of PATENT
Issue Date	: 08/25/2009	: TERM ADJUSTMENT IN VIEW
Appliction No	: 10/897,401	: OF WYETH AND NOTICE OF INTENT TO
Filed	: 07/23/2004	: ISSUE CERTIFICATE OF CORRECTION
		:

The Request for Recalculation is **GRANTED** to the extent indicated.

The patent term adjustment has been determined to be **1432** days. The USPTO will *sua sponte* issue a certificate of correction reflecting the amount of PTA days determined by the recalculation.

Prior to the issuance of the certificate of correction, the USPTO will afford patentee an opportunity to be heard and request reconsideration. Accordingly, patentee has **one month or thirty (30) days**, whichever is longer, to file a request for reconsideration of this patent term adjustment calculation. See 35 U.S.C. 154(b)(3)(B)(ii) and 37 CFR 1.322(a)(4). No extensions of time will be granted under 37 CFR 1.136.

Patentee should use document code PET.OP if electronically filing a request for reconsideration of this patent term adjustment calculation. The patentee must also include the information required by 37 CFR 1.705(b)(2) and the fee required by 37 CFR 1.18(e). If patentee does not file a timely request for reconsideration of this patent term adjustment calculation including the information required by 37 CFR 1.705(b)(2) and the fee required by 37 CFR 1.18(e), the USPTO will issue a certificate of correction reflecting the PTA determination noted above.

Patentee should be aware that in order to preserve the right to review in the United States District Court for the District of Columbia of the USPTO patent term adjustment determination, patentee must ensure that he or she also take the steps required under 35 U.S.C. 154(b)(4)(A) in a timely manner. Nothing in the request for recalculation should be construed as providing an alternative time frame for commencing a civil action under 35 U.S.C. 154(b)(4)(A).

Any questions concerning this decision should be directed to the Office of Patent Legal Administration at 571-272-7702.

UNITED STATES PATENT AND TRADEMARK OFFICE

Commissioner for Patents
United States Patent and Trademark Office
P.O. Box 1450
Alexandria, VA 22313-1450
www.uspto.gov

POSZ LAW GROUP, PLC
12040 SOUTH LAKES DRIVE, SUITE 101
RESTON, VA 20191

COPY MAILED
DEC 2 4 2008

In re Application of	:	
Kurt **D'MELLO, et al.**	:	
Application No. 10/897,402	:	DECISION ON PETITION
Filed: July 23, 2004	:	TO WITHDRAW
Attorney Docket No. **2831.029US1**	:	FROM RECORD

This is a decision on the Request to Withdraw as attorney or agent of record under 37 C.F.R. § 1.36(b), filed October 10, 2008.

The request is **NOT APPROVED** as moot.

A review of the file record indicates that the power of attorney to **POSZ LAW GROUP, PLC** has been revoked by the assignee of the patent application on November 4, 2008. Accordingly, the request to withdraw under 37 C.F.R. § 1.36(b) is moot.

All future communications from the Office will continue to be directed to the below-listed address until otherwise notified by applicant.

Telephone inquires concerning this decision should be directed to the undersigned at 571-272-7253.

/Monica A. Graves/
Petitions Examiner
Office of Petitions

cc: **SCHWEGMAN LUNDBERG & WOESSNER, PA.**
P.O. BOX 2938
MINNEAPOLIS, MN 55402

UNITED STATES PATENT and TRADEMARK OFFICE
UNDER SECRETARY OF COMMERCE FOR INTELLECTUAL PROPERTY AND
DIRECTOR OF THE UNITED STATES PATENT AND TRADEMARK OFFICE
WASHINGTON, D.C. 20231
WWW.USPTO.GOV

JUN 13 2005

In re Application of	:	ap
Prakash Trivedi, et al.	:	DECISION
Serial No. 10/897,405	:	ON
Filed: July 23, 2004	:	PETITION
For: PROCESS OF PREPARATION OF BLOCK	:	UNDER 708.02,VIII
COPOLYMERS AND THE BLOCK	:	
COPOLYMERS PREPARED THEREFROM	:	

This is in response to the petition filed May 13, 2005, requesting that the above-identified application be granted Special Status. The petition has been considered under Section 708.02 (VIII) of the MPEP and 37 CFR 1.102(c) (fee paid).

The petition has been found to be deficient for the following reason: Section 708.02, VIII(C) requires that a pre-examination search be made; this search should cover all areas searchable by the examiner. However, our review shows that Class 525, Subclass 534, 535, 906, should have been searched.

Accordingly, the petition is **DENIED.**

Richard Crispino, Special Program Examiner
Technology Center 1700
Chemical and Materials Engineering

UNITED STATES PATENT AND TRADEMARK OFFICE

Commissioner for Patents
United States Patent and Trademark Office
P.O. Box 1450
Alexandria, VA 22313-1450
www.uspto.gov

Liniak, Berenato & White
6550 Rock Spring Drive
Suite 240
Bethesda, MD 20817

COPY MAILED

MAY 1 5 2006

OFFICE OF PETITIONS

In re Application of	:	
Guido De Leo	:	
Application No. 10/897,407	:	DECISION ON PETITION
Filed: July 23, 2004	:	TO WITHDRAW
Attorney Docket No. 4235.411	:	FROM RECORD
	:	

This is a decision on the Request to Withdraw as attorney or agent of record under 37 C.F.R. § 1.36(b), filed January 5, 2006.

The request is **APPROVED**.

A grantable request to withdraw as attorney/agent of record must be signed by every attorney/agent seeking to withdraw or contain a clear indication that one attorney is signing on behalf of another/others. A request to withdraw will not be approved unless at least 30 (thirty) days would remain between the date of approval and the later of the expiration date of a time to file a response or the expiration date of the maximum time period which can be extended under 37 C.F.R. § 1.136(a).

Thomas P. Liniak has been withdrawn as attorney or agent; all other attorney remain of record.

Telephone inquiries concerning this decision should be directed to Cheryl Gibson-Baylor at (571)272-3213.

Cheryl Gibson Baylor

Cheryl Gibson-Baylor
Petitions Examiner
Office of Petitions

Conferee: Denise Pothier

RECEIVED
CENTRAL FAX CENTER
DEC 0 1 2005

IN THE UNITED STATES PATENT AND TRADEMARK OFFICE

IN RE UTILITY PATENT APPLICATION OF:

APPLICANTS	:	**McDonald *et al.***
SERIAL NO.	:	**10/897,420**
FILED	:	**July 23, 2004**
EXAMINER	:	**E.M. Cole**
ART UNIT	:	**1771**
FOR	:	**Concrete Curing Blanket**
CUSTOMER NO.	:	**56500**
DATE	:	**December 1, 2005**

CERTIFICATE OF FACSIMILE TRANSMISSION

Facsimile No.: 571/273-8300 Transmission Date: December 1, 2005

I certify that this correspondence is being transmitted via facsimile, under 37 C.F.R. §1.8, on the date indicated above to the facsimile number indicated above.

William A. Bonk, III

MAIL STOP PETITION
Commissioner for Patents
P.O. Box 1450
Alexandria, VA 22313-1450

Sir:

PETITION TO MAKE APPLICATION SPECIAL
35 U.S.C. §131; 37 C.F.R. §1.102

Applicants petition to make special to advance out of turn for examination or further action the above-identified Application because of actual infringement of claims of the Application. Assignee of the Application submits herewith a Statement by the Assignee, a certificate under 37 C.F.R §3.73(b) verifying Assignee's right to prosecute same and this Petition.

A. ACTUAL INFRINGEMENT

A device or product actually is on the market and/or a process actually is in use that falls within the claims of the Application. Applicants submit copies of documents evidencing same.

12/01/2005 TL0111 00000053 10897420
01 FC:1464 130.00 OP

PETITION GRANTED

William Krynski
Special Program Examiner
TC1700

UNITED STATES PATENT AND TRADEMARK OFFICE

Commissioner for Patents
United States Patent and Trademark Office
P.O. Box 1450
Alexandria, VA 22313-1450
www.uspto.gov

HOFFMAN, WASSON & GITLER, P.C.
Crystal Center 2, Suite 522
2461 South Clark Street
Arlington VA 22202

COPY MAILED

MAR 0 8 2005

OFFICE OF PETITIONS

In re Application of	:
Kupferberg and Robitaille	:
Application No. 10/897,435	: DECISION ACCORDING STATUS
Filed: July 23, 2004	: UNDER 37 CFR 1.47(a)
For: High Velocity and High	:
Dilution Exhaust System	:

This is in response to the petition under 37 CFR 1.47(a), filed February 14, 2005. Petitioner obtained a three-month extension of time to reply; therefore, petition is filed timely.

The petition is granted.

Petitioner has shown that March Robitaille, the non-signing inventor, has refused to join in the filing of the above-identified application after having been presented with the application papers. Specifically, the statement of facts of Minel Kupfergerg establishes that the inventor was mailed the application papers, including the specification, claims and drawings, but failed to respond to the request that he sign the declaration.

The above-identified application and papers have been reviewed and found in compliance with 37 CFR 1.47(a). This application is hereby accorded Rule 1.47(a) status. As provided in Rule 1.47(c), this Office will forward notice of this application's filing to the non-signing inventor at the address given in the present petition. Notice of the filing of this application will also be published in the Official Gazette.

The Office finance records indicate that petitioner submitted a $130.00 fee for the present petition. However, the correct amount for the petition fee is $400.00. Therefore, Deposit Account No. 08-2455 will be charged the difference in the amount of $70.00.

This matter is being referred to Technology Center Art Unit 3746.

Telephone inquiries regarding this decision should be directed to the undersigned at (571) 272-3211.

Christina Tartera Donnell

Christina Tartera Donnell
Senior Petitions Attorney
Office of Petitions

UNITED STATES PATENT AND TRADEMARK OFFICE

Commissioner for Patents
United States Patent and Trademark Office
P.O. Box 1450
Alexandria, VA 22313-1450
www.uspto.gov

Christopher J. McDonald
Hoffman, Wasson & Gitler
2461 South Clark Street
Crystal Center 2 – Suite 522
Arlington, VA 22202

MAILED

SEP 1 2 2005

Director's Office
Group 3700

In re application of Minel Kupferberg et al.	:	**DECISION ON PETITION TO MAKE SPECIAL UNDER 37 CFR. 1.102(c)**
Serial Number: 10/897,435 Filed: July 23, 2004	:	

For: **HIGH VELOCITY AND HIGH DILUTION EXHAUST SYSTEM**

This is a decision on the petition filed on April 15, 2005, under 37 CFR. 1.102(c) to make special the above identified application because of the age/health of the applicant. Since the requirements of the M.P.E.P Section 708.02 IV have been met, the petition will be GRANTED.

The examiner is directed (1) to make an interference search for possible interfering applications, (2) to promptly examine this application out of turn, and (3) if any interfering application is discovered, to examine such application simultaneously and state in the first official letter of such application that it is being taken out of turn because of a possible interference.

Petitioner is advised that this application will continue to be special, throughout its entire prosecution and pendency, including interference or appeal, if any, only is Petitioner makes a prompt bona-fide effort, in response to each Office action, to place the application in condition for allowance, even if it is necessary to conduct an interview with the Examiner to accomplish this purpose.

Summary: Decision on Petition **GRANTED**.

Richard A. Bertsch
Director
Technology Center 3700
(571) 272-3750

rt: 9/8/05

UNITED STATES PATENT AND TRADEMARK OFFICE

Commissioner for Patents
United States Patent and Trademark Office
P.O. Box 1450
Alexandria, VA 22313-1450
www.uspto.gov

DON J. CAMEGLE
5405 ALTON PKWY.
SUITE 5A PMB540
IRVINE CA 92604

COPY MAILED

MAR 0 2 2007

OFFICE OF PETITIONS

In re Application of	:
Ulf J.P. Klemming	:
Application No. 10/897,444	: DECISION GRANTING PETITION
Filed: July 24, 2004	: UNDER 37 CFR 1.137(b)
Attorney Docket No. 140.002	:

This is a decision on the petition under 37 CFR 1.137(b), filed October 26, 2006, to revive the above-identified application.

The petition is **GRANTED**.

The petition satisfies the conditions for revival pursuant to the provisions of 37 CFR 1.137(b) in that (1) the reply in the form of corrected drawings and a previously filed amendment on October 15, 2005; (2) the petition fee; and (3) the required statement of unintentional delay have been received. Accordingly, the reply to the Notice of November 1, 2005, is accepted as having been unintentionally delayed.

Additionally, the Terminal Disclaimer submitted with the petition on October 26, 2006, is not necessary since the above application was filed after June 8, 1995. The $65 fee for the terminal disclaimer is being credited to deposit account no. 19-4415 as authorized.

Telephone inquiries concerning this decision should be directed to the undersigned at (571) 272-3208.

This matter is being referred to Technology Center AU 3749.

Karen Creasy

Karen Creasy
Petitions Examiner
Office of Petitions

UNITED STATES PATENT AND TRADEMARK OFFICE

Commissioner for Patents
United States Patent and Trademark Office
P.O. Box 1450
Alexandria, VA 22313-1450
www.uspto.gov

ZARLEY LAW FIRM P.L.C.
CAPITAL SQUARE
400 LOCUST, SUITE 200
DES MOINES IA 50309-2350

COPY MAILED

OCT 20 2006

OFFICE OF PETITIONS

In re Application :
John A. Kish :
Application No. 10/897,448 : LETTER
Filed: July 23, 3004 :
Attorney Docket No. P06283US1-148A:

This is in response to the paper filed April 27, 2006, which is being treated under 37 CFR 1.27(g)(2) requesting that status as a Small Entity be removed.

In accordance with the April 27, 2006 request, status as a Small Entity has been removed and all future fees must be paid at the large entity rate.

This file is being referred to Patent Publication.

Karen Creasy

Karen Creasy
Petitions Examiner
Office of Petitions

UNITED STATES PATENT AND TRADEMARK OFFICE

Commissioner for Patents
United States Patent and Trademark Office
P.O. Box 1450
Alexandria, VA 22313-1450
www.uspto.gov

JONATHAN Y. KANG, ESQ.
LEE, HONG, DEGERMAN, KANG & SCHMADEKA
14TH FLOOR
801 S. FIGUEROA STREET
LOS ANGELES, CA 90017-5554

COPY MAILED

FEB 01 2005

OFFICE OF PETITIONS

In re Application of	:	
Han Sung Lee et al	:	DECISION DISMISSING
Application No. 10/897,466	:	PETITION
Filing: July 22, 2004	:	
Attorney Docket No. 2080-3265	:	

This is a decision on the petition under 37 CFR 1.10(d), filed October 27, 2004, requesting that the above-identified application be accorded a filing date of July 21, 2004, rather than the presently accorded filing date of July 22, 2004.

Applicants request the earlier filing date on the basis that the application was purportedly deposited in Express Mail service on July 21, 2004, pursuant to the requirements of 37 CFR 1.10. However, the Express Mail label identified in the original application papers shows a "date-in" of July 22, 2004. Applicants are alleging that the date of mailing shown by the Express Mail receipt is a U.S. Postal Service (USPS) error and the correct date of mailing is July 21, 2004.

In support, the petition is accompanied by a copy of a USPS record styled "Pickup Service Statement for Express Mail, Priority Mail, or Parcel Post" showing that a package bearing Express Mail label No. ER498737589US was picked up by the USPS from counsel's Office. Unfortunately, the date, time, and the USPS employee's initial are illegible.

Accordingly, the petition is dismissed. No fee is required and none has been charged.

Further correspondence with respect to this matter should be addressed as follows:

By mail: Mail Stop PETITION
Commissioner for Patents
Post Office Box 1450
Alexandria, VA 22313-1450

By hand: Customer Window located at:

U.S. Patent and Trademark Office
220 20th street S
Customer Window, Mail Stop Petitions
Crystal Plaza Two Lobby, Room 1B03
Arlington, VA 22202

By fax: (703) 872-9306
Attn: Office of Petitions

Telephone inquires specific to this matter should be directed to Wan Laymon at (571) 272-3220.

Frances Hicks for

Brian Hearn
Senior Petitions Examiner
Office of Petitions
Office of the Deputy Commissioner
for Patent Examination Policy

UNITED STATES PATENT AND TRADEMARK OFFICE

Commissioner for Patents
United States Patent and Trademark Office
P. O. Box 1450
Alexandria, VA 22313-1450
www.uspto.gov

JONATHAN Y. KANG
LEE HONG DEGERMAN KANG & SCHMADEKA
801 S. FIGUEROA STREET, 14TH FLOOR
LOS ANGELES, CA 90017-5554

COPY MAILED

MAR 23 2005

OFFICE OF PETITIONS

In re Application of	:	
Han Sung Lee et al	:	
Application No. 10/897,466	:	DECISION GRANTING
Filed: July 21, 2004	:	PETITION
Attorney Docket No. 2080-3265	:	

This is a decision on the renewed petition under 37 CFR 1.10 (d), filed February 22, 2005, requesting that the above-identified application be accorded a filing date of July 21, 2004, rather than the presently accorded filing date of July 22, 2004.

Petitioners request the earlier filing date on the basis that the application was purportedly deposited with the U.S. Postal Service (USPS) as Express Mail on July 21, 2004, pursuant to the requirements of 37 CFR 1.10. However, the Express Mail label identified in the original application papers shows a "date-in" of July 22, 2004. Petitioners are alleging that the date of mailing shown by the Express Mail receipt is a U.S. Postal Service (USPS) error and the correct date of mailing is July 21, 2004.

In support, the petition is accompanied by a copy of a USPS record styled "Pickup Service Statement for Express Mail, Priority Mail, or Parcel Post" showing that a package bearing Express Mail label No. ER498737589US was picked up by the USPS from counsel's Office on July 21, 2004.

Since the evidence from the USPS, namely, the Express Mail Pickup Service Statement, corroborates a "pickup date" of July 21, 2004, the instant application file is entitled to a filing date of July 21, 2004, and has been so accorded.

The petition is granted. No petition fee is required and none has been charged.

Telephone inquiries specific to this matter should be directed to Wan Laymon at (571) 272-3220.

This matter is being referred to Technology Center AU 3661 for examination in due course.

Frances Hicks

Frances Hicks
Lead Petitions Examiner
Office of Petitions
Office of the Deputy Commissioner
for Patent Examination Policy

OIPE
JUN 0 7 2006
PATENT & TRADEMARK OFFICE

IFW

IN THE UNITED STATES PATENT AND TRADEMARK OFFICE

Applicant(s): Arnold Nerenberg

Group Art Unit: 1761

Serial No.: 10/897,468

Examiner:

Filed: 07/23/2004

Docket No.: NERE-3927

Title: **FOOD SWEETENER**

Commissioner for Patents
P.O. Box 1450
Alexandria, VA 22313-1450

PETITION TO MAKE SPECIAL UNDER 37 C.F.R. § 1.102(c)

Dear Sir:

This is a Petition to Make Special the above identified patent application. The basis for this petition is that the applicant is over sixty-five years of age.

In accordance with MPEP 708.02(c)(1), a certified copy of applicant's birth certificate is attached.

In view of the above, applicant requests that this Petition to Make Special be granted and the examination of the application be advanced.

Date: 06/01/2006

Jack P. Friedman
Jack P. Friedman
Registration No. 44,688

SCHMEISER, OLSEN & WATTS
22 Century Hill Drive - Suite 302
Latham, New York 12110
(518) 220-1850

Best Available Copy

PETITION GRANTED

William Krynski
Special Program Examiner
Technology Center 1700
JUN 2 1 2006

UNITED STATES PATENT AND TRADEMARK OFFICE

Commissioner for Patents
United States Patent and Trademark Office
P.O. Box 1450
Alexandria, VA 22313-1450
www.uspto.gov

BROOKS KUSHMAN P.C.
1000 TOWN CENTER
TWENTY-SECOND FLOOR
SOUTHFIELD MI 48075

COPY MAILED

SEP 08 2008

OFFICE OF PETITIONS

In re Application of :

SAULLES, Ian et al. :
Application No. 10/897,475 :
Filed: July 23, 2004 :
Attorney Docket No. **LASA 0101 PUS** :

DECISION ON PETITION
TO WITHDRAW
FROM RECORD

This is a decision on the Request to Withdraw as attorney or agent of record under 37 C.F.R. § 1.36(b), filed July 31, 2008.

The request is **APPROVED**.

A grantable request to withdraw as attorney/agent of record must be signed by every attorney/agent seeking to withdraw or contain a clear indication that one attorney is signing on behalf of another/others. The Office requires the practitioner(s) requesting withdrawal to certify that he, she, or they have: (1) given reasonable notice to the client, prior to the expiration of the response period, that the practitioner(s) intends to withdraw from employment; (2) delivered to the client or a duly authorized representative of the client all papers and property (including funds) to which the client is entitled; and (3) notified the client of any responses that may be due and the time frame within which the client must respond, pursuant 37 CFR 10.40(c).

The request was signed by William Abbatt on behalf of all attorneys of record who are associated with customer No. 22045. All attorneys/agents associated with the Customer Number 22045 have been withdrawn. Applicant is reminded that there is no attorney of record at this time.

All future correspondence will be directed to the first named inventor Ian Saulles at the address indicated below. The application became abandoned for failure to respond to an Office action mailed February 11, 2008.

Telephone inquiries concerning this decision should be directed to Tredelle Jackson at 571-272-2783.

Tredelle D. Jackson
Paralegal Specialist
Office of Petitions

cc: **IAN SULLESS**
18331 VICENZA WAY
FT. MYERS FL 33913

UNITED STATES PATENT AND TRADEMARK OFFICE

COMMISSIONER FOR PATENTS
UNITED STATES PATENT AND TRADEMARK OFFICE
P.O. BOX 1450
ALEXANDRIA, VA 22313-1450
www.uspto.gov

Paper No.

Ziolkowski Patent Solutions
Group, LLC
14135 N. Cedarburg Road
Mequon WI 53097

COPY MAILED

OCT 2 4 2008

OFFICE OF PETITIONS

In re Patent No. 7,078,900	:	DECISION ON REQUEST
Vu	:	FOR RECONSIDERATION OF
Issue Date: July 18, 2006	:	PATENT TERM ADJUSTMENT
Application No. 10/897,477	:	and
Filed: July 23, 2004	:	NOTICE OF INTENT TO ISSUE
Atty Docket No. GEMS8081.223	:	CERTIFICATE OF CORRECTION

This is a decision on the APPLICATION FOR PATENT TERM ADJUSTMENT UNDER 37 C.F.R. §1.705(d), filed August 10, 2006. Patentee requests that the patent term adjustment on the issued patent be corrected from zero (0) days to sixty-one (61) days. This paper was recently forwarded to the undersigned for consideration.

The request for reconsideration of the patent term adjustment indicated in the patent is **GRANTED**.

The patent term adjustment indicated in the patent is to be corrected by issuance of a certificate of correction showing a revised Patent Term Adjustment of **sixty-one (61)** days.

On July 18, 2006, the application matured into U.S. Patent No. 7,078,900, with a revised patent term adjustment of 0 days. On August 10, 2006, patentee timely submitted this request for reconsideration of patent term adjustment (with required fee), requesting that the Patent Term Adjustment be corrected to 61 days. Patentee disputes the reductions of 36 and 25 days associated with a miscellaneous incoming letter and a paper titled §312 amendment filed after the mailing of the notice of allowance.

A review of the application history reveals that the one paper filed May 19, 2006 was entered as an amendment and one paper filed May 19, 2006 was entered as a miscellaneous incoming letter. However, the paper filed May 19, 2006 was actually a COMMENT ON THE NOTICE OF ALLOWANCE, requesting the Office to correct an error in the Notice of Allowability. To which the Office responded with the mailing of a corrected supplemental Notice of Allowability on June 12, 2006. Thus, the entry of a period of reduction pursuant to 37 CFR 1.704(c)(10)[1] is not warranted. As stated in MPEP 2732:

> Certain papers filed after allowance are not considered to be a failure to engage in reasonable efforts to conclude processing or examination of an application. See *Clarification of 37 CFR 1.704(c)(10) - Reduction of Patent Term Adjustment for Certain Types of Papers Filed After a Notice of Allowance has been Mailed*, 1247 Off. Gaz. Pat. Office 111 (June 26, 2001). The submission of the following papers after a "Notice of Allowance" is not considered a failure to engage in reasonable efforts to conclude processing or examination of an application: (1) Fee(s) Transmittal (PTOL-85B); (2) Power of Attorney; (3) Power to Inspect; (4) Change of Address; (5) Change of Status (small/not small entity status); (6) a response to the examiner's reasons for allowance or a request to correct an error or omission in the "Notice of Allowance" or "Notice of Allowability;" and (7) letters related to government interests (e.g., those between NASA and the Office).

In view thereof, the patent should have issued with a patent term adjustment of sixty-one (61) days.

The Office acknowledges submission of the $200.00 fee set forth in 37 CFR 1.18(e). No additional fees are required.

---

[1] 1.704(c)(10) Submission of an amendment under § 1.312 or other paper after a notice of allowance has been given or mailed, in which case the period of adjustment set forth in § 1.703 shall be reduced by the lesser of:
(i) The number of days, if any, beginning on the date the amendment under § 1.312 or other paper was filed and ending on the mailing date of the Office action or notice in response to the amendment under § 1.312 or such other paper; or (ii) Four months.

The application file is being forwarded to the Certificates of Correction Branch for issuance of a certificate of correction in order to rectify this error. The Office will issue a certificate of correction indicating that the term of the above-identified patent is extended or adjusted by **SIXTY-ONE (61)** days.

Telephone inquiries specific to this matter should be directed to the undersigned at (571) 272-3219.

Nancy Johnson
Senior Petitions Attorney
Office of Petitions

Attachment: Copy of DRAFT Certificate of Correction

UNITED STATES PATENT AND TRADEMARK OFFICE

CERTIFICATE OF CORRECTION

PATENT : 7,078,900 B2

DATED : **July 18, 2006** **DRAFT**

INVENTOR(S) : Vu

It is certified that error appears in the above-identified patent and that said Letters Patent is hereby corrected as shown below:

On the cover page,

[*] Notice: Subject to any disclaimer, the term of this patent is extended or adjusted under 35 USC 154(b) by 0 days

Delete the phrase "by 0 days" and insert – by 61 days--

UNITED STATES PATENT AND TRADEMARK OFFICE

Commissioner for Patents
United States Patent and Trademark Office
P.O. Box 1450
Alexandria, VA 22313-1450
www.uspto.gov

DAVID WEISS
12650 RIVERSIDE DRIVE
SUITE 100
NORTH HOLLYWOOD CA 91607-3442

COPY MAILED

DEC 1 1 2008

OFFICE OF PETITIONS

In re Application of :
David Fu et al. :
Application No. 10/897,505 : ON PETITION
Filed: July 22, 2004 :
Attorney Docket No: 10502

This is a decision on the petition filed October 20, 2008 under 37 CFR 1.182, for withdrawal of the terminal disclaimer filed May 13, 2008 (May 8, 2008 Certificate of Mail Date).

The petition is **GRANTED**.

The examiner responsible for the above-identified application has indicated that the terminal disclaimer filed May 13, 2008 (May 8, 2008 Certificate of Mail Date) does not apply to any of the claims as currently amended. Accordingly, on petition the terminal disclaimer is withdrawn.

The petition fee in the amount of $400.00 has been charged to deposit account no. 23-0822 pursuant to the authorization contained in the petition.

This matter is being referred to Technology Center 3728 to correct the records related to the terminal disclaimer filed May 13, 2008 (May 8, 2008 Certificate of Mail Date) consistent with this decision.

Telephone inquiries concerning this matter may be directed to the undersigned Petitions Attorney at (571) 272-3212.

Patricia Faison-Ball

Patricia Faison-Ball
Senior Petitions Attorney
Office of Petitions

UNITED STATES PATENT AND TRADEMARK OFFICE

Commissioner for Patents
United States Patent and Trademark Office
P.O. Box 1450
Alexandria, VA 22313-1450
www.uspto.gov

MORRISON & FOERSTER LLP
755 PAGE MILL RD
PALO ALTO CA 94304-1018

COPY MAILED

APR 27 2007

OFFICE OF PETITIONS

In re Patent: 7,058,249
Application No. 10/897,507
Filed: July 23, 2004
Issued: June 6, 2006
Attorney Docket Number:
373722002710

: NOTICE

This is a notice regarding your request filed on January 16, 2007, for acceptance of a fee deficiency submission under 37 CFR 1.28 (c).

37 CFR 1.28 (c) states: "The deficiency is based on the amount of the fee, for other than a small entity, in effect at the time the deficiency is paid in full." Accordingly, the fee deficiency submission under 37 CFR 1.28 is hereby accepted.

The change in status to a large entity has been entered and made of record. This Notice is not intended to imply that the USPTO conducted any investigation of this matter.

The change in status to a large entity has been entered and made of record.

Charlema R. Grant

Charlema R. Grant
Petitions Attorney
Office of Petitions

UNITED STATES PATENT AND TRADEMARK OFFICE

COMMISSIONER FOR PATENTS
UNITED STATES PATENT AND TRADEMARK OFFICE
P.O. BOX 1450
ALEXANDRIA, VA 22313-1450
WWW.USPTO.GOV

Paper No. None

CONNOLLY BOVE LODGE & HUTZ, LLP
P O BOX 2207
WILMINGTON DE 19899

COPY MAILED

MAR 07 2006

OFFICE OF PETITIONS

In re Application of :
Peter Bell et al. :
Application No. 10/897,510 :
Filed: July 23, 2004 :
Attorney Docket Number: 07244-00149-US :
Title: COLOUR PHOTOGRAPHIC SILVER HALIDE MATERIAL :

DECISION ON PETITION
UNDER 37 C.F.R. §1.137(B)

This is a decision on the petition, pursuant to 37 C.F.R. §1.137(b)[1], to revive the above-identified application, filed on December 20, 2005.

The above-identified application became abandoned for failure to reply in a timely manner to the non-final Office action, mailed June 16, 2005, which set a shortened statutory period for reply of three (3) months. No response was received, and no extensions of time under the provisions of 37 C.F.R. §1.136(a) were requested. Accordingly, the above-identified application became abandoned on September 17, 2005. A Notice of Abandonment was mailed December 14, 2005.

With the present petition, Petitioner has submitted the petition fee, a response, and the proper statement of unintentional delay. A terminal disclaimer is not required.

The petition is **GRANTED**.

1 A grantable petition pursuant to 37 CFR 1.137(b) must be accompanied by:
(1) The reply required to the outstanding Office action or notice, unless previously filed;
(2) The petition fee as set forth in § 1.17(m);
(3) A statement that the entire delay in filing the required reply from the due date for the reply until the filing of a grantable petition pursuant to this paragraph was unintentional. The Commissioner may require additional information where there is a question whether the delay was unintentional, and;
(4) Any terminal disclaimer (and fee as set forth in § 1.20(d))
required pursuant to paragraph (d) of this section.

The Technology Center will be notified of this decision.

Telephone inquiries regarding this decision should be directed to the undersigned at (571) 272-3225. All other inquiries concerning examination procedures or status of the application should be directed to the Technology Center.

Paul Shanoski
Senior Attorney
Office of Petitions
United States Patent and Trademark Office

UNITED STATES PATENT AND TRADEMARK OFFICE

COMMISSIONER FOR PATENTS
UNITED STATES PATENT AND TRADEMARK OFFICE
P.O. BOX 1450
ALEXANDRIA, VA 22313-1450
www.uspto.gov

JONATHAN Y. KANG, ESQ.
LEE, HONG, DEGERMAN, KANG & SCHMADEKA, P.C.
14th Floor
801 S. Figueroa Street
Los Angeles, CA 90017

COPY MAILED
MAY 0 3 2005
OFFICE OF PETITIONS

In re Application of :
Shin :
Filed: July 23, 2004 : ON PETITION
Application No. 10/897,518 :
Dkt. No.: 2060-3147 :

This decision is in response to the "PETITION UNDER 37 C.F.R. § 1.182 TO RETAIN FILING DATE OF JULY 23, 2004," filed October 14, 2004, requesting that the instant application be accorded a filing date of February 23, 2004 because the drawing alleged to have been omitted from the application as filed was incorporated by reference.

The application was filed July 23, 2004. On October 1, 2004, the Office of Initial Patent Examination mailed a Notice of Omitted Items(s) in a Nonprovisional Application ("Notice") stating that the application had been accorded a filing date of July 23, 2004, but that Figure 5 described in the specification appeared to have been omitted.

The Notice permits applicant to either: (1) promptly establish prior receipt in the PTO of the drawing(s) at issue (generally by way of a date-stamped postcard receipt (MPEP 503)), or (2) promptly submit the omitted drawing(s) in a nonprovisional application and accept the date of such submission as the application filing date. An applicant asserting that the missing drawings were in fact deposited in the PTO with the application papers must file a petition (and the appropriate petition fee) with evidence of such deposit. An applicant desiring to submit the omitted drawings in a nonprovisional application and accept the date of such submission as the application filing date must file any omitted drawing(s) with an oath or declaration in compliance with 37 CFR 1.63 and 1.64 referring to such drawing(s) and a petition under 37 CFR 1.182 (with the petition fee under 37 CFR 1.17(h)) requesting the later filing date within two months of the date of the Notice (37 CFR 1.181(f)).

The instant petition and a copy of the missing figure were filed in response to the Notice. The petition states, in effect, that the above-identified application incorporated by reference prior filed

Korean Patent Application Nos. 10-2003-51054 or Korean Application No. 10-2003-78582.

An applicant may incorporate by reference a foreign application by including, in the application-as-filed, a statement that such foreign application(s) is incorporated by reference. The inclusion of this incorporation by reference of the foreign application(s) will permit an applicant to amend the application to include any subject matter in such prior application(s), without the need for a petition. *See*, MPEP 608.01(p).

Accordingly, the petition is **DISMISSED**.

In view of the incorporation by reference of the foreign application, Figure 5 is not new matter if said figure was part of the disclosure of Korean Patent Application No. 10-2003-51054 or Korean Application No. 10-2003-78582. However, the figure submitted with the instant petition has not been entered into the record.

To avoid further delay in the examination of the application, a preliminary amendment amending the application to include the missing figure should be submitted prior to the issuance of the first office action on the merits.

Receipt is hereby acknowledged of the required petition fee.

The application is being returned to the Office of Initial Patent Examination for further processing with a filing date of July 23, 2004.

Thereafter, the application will be forwarded to the appropriate group art unit for consideration by the examiner of any amendment that may be filed requesting the entry of a new drawing sheet.

Telephone inquiries related to this decision may be directed to the undersigned at (571) 272-3205.

Alesia M. Brown
Petitions Attorney
Office of Petitions

UNITED STATES PATENT AND TRADEMARK OFFICE

Commissioner for Patents
United States Patent and Trademark Office
P.O. Box 1450
Alexandria, VA 22313-1450
www.uspto.gov

SQUIRE, SANDERS & DEMPSEY L.L.P.
1 MARITIME PLAZA, SUITE 300
SAN FRANCISCO CA 94111

MAILED

MAY 26 2009

OFFICE OF PETITIONS

In re Application of
DENG, Guoshun et al.
Application No. 10/897,519
Filed: July 24, 2004
Attorney Docket No. **090171-0103**

DECISION ON PETITION
TO WITHDRAW
FROM RECORD

This is a decision on the Request to Withdraw as attorney or agent of record under 37 C.F.R. § 1.36(b), filed December 22, 2008.

The request is **moot** because a revocation of power of attorney has been previously filed.

A review of the file record indicates that the power of attorney to SQUIRE, SANDERS & DEMPSEY L.L.P. has been revoked by the assignee of the patent application on January 21, 2009. Accordingly, the request to withdraw under 37 C.F.R. § 1.36(b) is moot.

All future communications from the Office will continue to be directed to the below-listed address until otherwise notified by applicant.

Telephone inquires concerning this decision should be directed to Tredelle Jackson at 571-272-2783.

Tredelle D. Jackson
Paralegal Specialist
Office of Petitions

cc: **SQUIRE, SANDERS & DEMPSEY L.L.P.**
1 MARITIME PLAZA, SUITE 300
SAN FRANCISCO CA 94111

UNITED STATES PATENT AND TRADEMARK OFFICE

Commissioner for Patents
United States Patent and Trademark Office
P.O. Box 1450
Alexandria, VA 22313-1450
www.uspto.gov

COPY MAILED

AUG 3 1 2009

OFFICE OF PETITIONS

FOLEY AND LARDNER LLP
SUITE 500
3000 K STREET NW
WASHINGTON, DC 20007

In re Application of	:	
DENG, Guoshun et al.	:	CORRECTED
Application No. 10/897,519	:	DECISION ON PETITION
Filed: July 24, 2004	:	TO WITHDRAW
Attorney Docket No. **090171-0103**	:	FROM RECORD
	:	

This is a decision on the corrected Request to Withdraw as attorney or agent of record under 37 C.F.R. § 1.36(b), filed July 20, 2009.

The request is **moot** because a revocation of power of attorney has been previously filed.

A review of the file record indicates that the power of attorney to FOLEY AND LARDNER LLP has been revoked by the assignee of the patent application on January 21, 2009. Accordingly, the request to withdraw under 37 C.F.R. § 1.36(b) is moot.

All future communications from the Office will continue to be directed to the below-listed address until otherwise notified by applicant.

Telephone inquires concerning this decision should be directed to Tredelle Jackson at 571-272-2783.

Tredelle D. Jackson
Paralegal Specialist
Office of Petitions

cc: **SQUIRE, SANDERS & DEMPSEY L.L.P.**
1 MARITIME PLAZA, SUITE 300
SAN FRANCISCO CA 94111

UNITED STATES PATENT AND TRADEMARK OFFICE

Commissioner for Patents
United States Patent and Trademark Office
P.O. Box 1450
Alexandria, VA 22313-1450
www.uspto.gov

FOLEY AND LARDNER LLP
SUITE 500
3000 K STREET NW
WASHINGTON, DC 20007

MAILED

AUG 3 1 2009

OFFICE OF PETITIONS

In re Application of	:	
DENG, Guoshun et al.	:	CORRECTED
Application No. 10/897,519	:	DECISION ON PETITION
Filed: July 24, 2004	:	TO WITHDRAW
Attorney Docket No. **090171-0103**	:	FROM RECORD
	:	

This is a decision on the corrected Request to Withdraw as attorney or agent of record under 37 C.F.R. § 1.36(b), filed July 20, 2009.

The request is **moot** because a revocation of power of attorney has been previously filed.

A review of the file record indicates that the power of attorney to FOLEY AND LARDNER LLP has been revoked by the assignee of the patent application on January 21, 2009. Accordingly, the request to withdraw under 37 C.F.R. § 1.36(b) is moot.

All future communications from the Office will continue to be directed to the below-listed address until otherwise notified by applicant.

Telephone inquires concerning this decision should be directed to Tredelle Jackson at 571-272-2783.

Tredelle D. Jackson
Paralegal Specialist
Office of Petitions

cc: **SQUIRE, SANDERS & DEMPSEY L.L.P.**
1 MARITIME PLAZA, SUITE 300
SAN FRANCISCO CA 94111

UNITED STATES PATENT AND TRADEMARK OFFICE

Commissioner for Patents
United States Patent and Trademark Office
P.O. Box 1450
Alexandria, VA 22313-1450
www.uspto.gov

MINTZ, LEVIN, COHN, FERRIS, GLOVSKY AND POPEO, P.C
ONE FINANCIAL CENTER
BOSTON MA 02111

MAILED

OCT 07 2009

OFFICE OF PETITIONS

In re Application of	:	
MAYERS et al.	:	
Application No. 10/897,530	:	ON APPLICATION FOR
Filed: July 23, 2004	:	PATENT TERM ADJUSTMENT
Atty. Docket No. 28089-501:		

This is in response to the REQUEST FOR RECONSIDERATION OF PATENT TERM ADJUSTMENT UNDER 37 C.F.R. §1.705(b) filed July 10, 2009. Applicant submits that the correct patent term adjustment to be indicated on the patent is five hundred seven (507) days, not zero (0) days as calculated by the Office as of the mailing of the initial determination of patent term adjustment. Applicant seeks this correction solely on the basis that the Office will take in excess of three years to issue this patent.

As the instant application for patent term adjustment requests reconsideration of the patent term adjustment as it relates to the Office's failure to issue the patent within three years of the filing date, the application for patent term adjustment under 37 CFR 1.705(b) is **DISMISSED as PREMATURE**.

Knowledge of the actual date the patent issues is required to calculate the amount, if any, of additional patent term patentees are entitled to for Office failure to issue the patent within three years. See 37 CFR 1.702(b). (This is true even where a request for continued examination (RCE) was filed). The computer will not undertake the § 1.702(b) calculation until the actual date of issuance of the patent has been determined. Likewise, the computer will not calculate any further Office delay under 37 CFR 1.702(a)(4) or applicant delay under 37 CFR 1.704(c)(10) until the actual date of issuance of the patent has been determined. As such, the Office cannot make a

determination on the correctness of the patent term adjustment until the patent has issued.

Requesting reconsideration of the patent term adjustment to be indicated on the patent under 37 CFR 1.705(b) based on the initial determination of patent term adjustment and a projected issuance date of the patent (or even the filing date of the request for continued examination) is premature. Accordingly, it is appropriate to dismiss such a request as premature.

Rather than file an application for patent term adjustment under 37 CFR 1.705(b) contesting the 37 CFR 1.702(b) calculation at the time of the mailing of the notice of allowance, applicants are advised that they may wait until the time of the issuance of the patent and file a request for reconsideration of the patent term adjustment pursuant to 37 CFR 1.705(d). As the USPTO does not calculate the amount of time earned pursuant to 37 CFR 1.702(b) until the time of the issuance of the patent, the Office will consider any request for reconsideration of the patent term adjustment due to an error in the calculation of 37 CFR 1.702(b) to be timely if the request for reconsideration is filed within two months of the issuance of the patent. However, as to all other bases for contesting the initial determination of patent term adjustment received with the notice of allowance, applicants must timely file an application for patent term adjustment prior to the payment of the issue fee.[1]

The Office will charge applicant's deposit account for the $200.00 fee set forth in 37 CFR 1.18(e) for consideration of the application for patent term adjustment under 37 CFR 1.705(b).

Any request for reconsideration of the patent term adjustment indicated on the patent must be timely filed within two months

---

[1] For example, if applicants dispute both the calculation of patent term adjustment under 37 CFR 1.702(a)(1) for Office failure to mail a first Office action or notice of allowance not later than fourteen months after the date on which the application was filed, and under 37 CFR 1.702(b) for Office failure to issue a patent within three years of the actual filing date of the application, then applicants must still timely file an application for patent term adjustment prior to the payment of the issue fee to contest the calculation of Office delay in issuing a first Office action or notice of allowance. See 37 CFR 1.705(b) and 35 U.S.C. 154(b)(3)(B). A dispute as to the calculation of the § 1.702(a)(1) period raised on request for reconsideration of patent term adjustment under 37 CFR 1.705(d) will be dismissed as untimely filed.

after issuance pursuant to 37 CFR 1.705(d) and must include payment of the required fee under 37 CFR 1.18(e).

The Office of Data Management has been advised of this decision. This application is being referred to the Office of Data Management for issuance of the patent.

Telephone inquiries specific to this decision should be directed to the undersigned at (571) 272-3211.

Christina Tartera Donnell

Christina Tartera Donnell
Senior Petitions Attorney
Office of Petitions

UNITED STATES PATENT AND TRADEMARK OFFICE

Commissioner for Patents
United States Patent and Trademark Office
P.O. Box 1450
Alexandria, VA 22313-1450
www.uspto.gov

MAILED

APR 22 2010

OFFICE OF PETITIONS

MINTZ, LEVIN, COHN, FERRIS, GLOVSKY AND POPEO, P.C
ONE FINANCIAL CENTER
BOSTON MA 02111

In re Patent No. 7,615,221	: DECISION ON REQUEST FOR
Mayers et al.	: RECONSIDERATION OF
Issue Date: November 10, 2009	: PATENT TERM ADJUSTMENT
Application No. 10/897,530	: AND
Filed: July 23, 2004	: NOTICE OF INTENT TO ISSUE
Attorney Docket No. 39790-501F01US	: CERTIFICATE OF CORRECTION

This is a decision on the petition filed on January 8, 2010, which is being treated as a petition under 37 CFR 1.705(d) requesting that the patent term adjustment indicated on the above-identified patent be corrected to indicate that the term of the above-identified patent is extended or adjusted by five hundred seven (507) days.

The petition to correct the patent term adjustment indicated on the above-identified patent to indicate that the term of the above-identified patent is extended or adjusted by five hundred seven (507) days is **GRANTED**.

The Office will charge the Deposit Account for the $200.00 fee set forth in 37 CFR 1.18(e), as authorized. No additional fees are required.

The application is being forwarded to the Certificates of Correction Branch for issuance of a certificate of correction. The Office will issue a certificate of correction indicating that the term of the above-identified patent is extended or adjusted by **five hundred seven (507) days**.

Telephone inquiries specific to this matter should be directed to the undersigned at (571) 272-3211.

C. T. Donnell

Christina Tartera Donnell
Senior Petitions Attorney
Office of Petitions

Enclosure: Copy of DRAFT Certificate of Correction

UNITED STATES PATENT AND TRADEMARK OFFICE

CERTIFICATE OF CORRECTION

PATENT : 7,615,221 B2

DATED : Nov. 10, 2009 **DRAFT**

INVENTOR(S) : Mayers et al.

It is certified that error appears in the above-identified patent and that said Letters Patent is hereby corrected as shown below:

On the cover page,

[*] Notice: Subject to any disclaimer, the term of this patent is extended or adjusted under 35 USC 154(b) by 239 days

Delete the phrase "by 239 days" and insert – by 507 days--

Day : Wednesday

PALM INTRANET

Date: 4/21/2010
Time: 16:04:48

PTA Calculations for Application: 10/897530			
Application Filing Date:	07/23/2004	PTO Delay (PTO):	514
Issue Date of Patent:	11/10/2009	Three Years:	0
Pre-Issue Petitions:	0	Applicant Delay (APPL):	275
Post-Issue Petitions:	0	Total PTA (days):	507
PTO Delay Adjustment:	268		

File Contents History

Number	Date	Contents Description	PTO	APPL	START
85	04/21/2010	ADJUSTMENT OF PTA CALCULATION BY PTO	268		
81.5	10/21/2009	PTA 36 MONTHS	245		
81	11/10/2009	PATENT ISSUE DATE USED IN PTA CALCULATION			
80	10/14/2009	EXPORT TO FINAL DATA CAPTURE			
79	10/13/2009	DISPATCH TO FDC			
78	10/07/2009	MAIL-PETITION DECISION - DISMISSED			
77	10/07/2009	PETITION DECISION - DISMISSED			
76	07/10/2009	PETITION ENTERED			
75	07/13/2009	APPLICATION IS CONSIDERED READY FOR ISSUE			
74	07/10/2009	ISSUE FEE PAYMENT VERIFIED			
73	07/10/2009	ISSUE FEE PAYMENT RECEIVED			
70	04/13/2009	MAIL NOTICE OF ALLOWANCE			
69	04/10/2009	NOTICE OF ALLOWANCE DATA VERIFICATION COMPLETED			
68	04/10/2009	CASE DOCKETED TO EXAMINER IN GAU			
67	04/06/2009	MAIL EXAMINER'S AMENDMENT			
66	03/25/2009	ISSUE REVISION COMPLETED			
65	03/25/2009	DOCUMENT VERIFICATION			
64	03/16/2009	EXAMINER'S AMENDMENT COMMUNICATION			
63	03/16/2009	NOTICE OF ALLOWABILITY			
62	03/12/2009	EXAMINER INTERVIEW SUMMARY RECORD (PTOL - 413)			
61	03/13/2009	PARALEGAL TD ACCEPTED			
60	03/12/2009	TERMINAL DISCLAIMER FILED			
57	12/18/2008	INFORMATION DISCLOSURE STATEMENT			

		CONSIDERED			
56	02/06/2009	DATE FORWARDED TO EXAMINER			
55	12/18/2008	REQUEST FOR CONTINUED EXAMINATION (RCE)			
54	02/06/2009	DISPOSAL FOR A RCE / CPA / R129			
53	12/18/2008	REFERENCE CAPTURE ON IDS			
52	12/18/2008	INFORMATION DISCLOSURE STATEMENT (IDS) FILED			
51	12/18/2008	INFORMATION DISCLOSURE STATEMENT (IDS) FILED			
50	12/18/2008	WORKFLOW - REQUEST FOR RCE - BEGIN			
49	10/27/2008	FINISHED INITIAL DATA CAPTURE			
48	09/22/2008	EXPORT TO INITIAL DATA CAPTURE			
47	09/18/2008	MAIL EXAMINER'S AMENDMENT			
46	09/18/2008	MAIL NOTICE OF ALLOWANCE			
45	09/16/2008	ISSUE REVISION COMPLETED			
44	09/16/2008	DOCUMENT VERIFICATION			
43	09/16/2008	NOTICE OF ALLOWANCE DATA VERIFICATION COMPLETED			
42	09/16/2008	EXAMINER'S AMENDMENT COMMUNICATION			
41	09/15/2008	NOTICE OF ALLOWABILITY			
37	07/08/2008	DATE FORWARDED TO EXAMINER			
36	06/11/2008	RESPONSE AFTER NON-FINAL ACTION		92	34
35	06/11/2008	REQUEST FOR EXTENSION OF TIME - GRANTED			
34	12/11/2007	MAIL NON-FINAL REJECTION			
33	12/10/2007	NON-FINAL REJECTION			
28	09/29/2007	DATE FORWARDED TO EXAMINER			
27	09/27/2007	RESPONSE AFTER NON-FINAL ACTION		92	25
26	09/27/2007	REQUEST FOR EXTENSION OF TIME - GRANTED			
25	03/27/2007	MAIL NON-FINAL REJECTION			
24	03/22/2007	NON-FINAL REJECTION			
23	01/11/2007	DATE FORWARDED TO EXAMINER			
22	12/19/2006	RESPONSE TO ELECTION / RESTRICTION FILED		91	19
21	12/19/2006	REQUEST FOR EXTENSION OF TIME - GRANTED			
19	06/19/2006	MAIL RESTRICTION REQUIREMENT	269		-1
18	06/15/2006	REQUIREMENT FOR RESTRICTION / ELECTION			

17	02/28/2006	IFW TSS PROCESSING BY TECH CENTER COMPLETE			
16	02/28/2006	CASE DOCKETED TO EXAMINER IN GAU			
15	12/13/2004	PRELIMINARY AMENDMENT			
14	12/30/2004	APPLICATION RETURN FROM OIPE			
13	12/30/2004	APPLICATION RETURN TO OIPE			
12	12/30/2004	APPLICATION DISPATCHED FROM OIPE			
11	12/30/2004	APPLICATION IS NOW COMPLETE			
10	12/13/2004	ADDITIONAL APPLICATION FILING FEES			
9	12/13/2004	A STATEMENT BY ONE OR MORE INVENTORS SATISFYING THE REQUIREMENT UNDER 35 USC 115, OATH OF THE APPLIC			
8	12/13/2004	APPLICANT HAS SUBMITTED NEW DRAWINGS TO CORRECT CORRECTED PAPERS PROBLEMS			
7	10/13/2004	NOTICE MAILED--APPLICATION INCOMPLETE--FILING DATE ASSIGNED			
5	09/15/2004	CLEARED BY L&R (LARS)			
4	09/08/2004	REFERRED TO LEVEL 2 (LARS) BY OIPE CSR			
3	09/08/2004	CASE CLASSIFIED BY OIPE			
2	08/20/2004	IFW SCAN & PACR AUTO SECURITY REVIEW			
1	07/23/2004	INITIAL EXAM TEAM NN			

Search Another: Application# Search

EXPLANATION OF PTA CALCULATION

EXPLANATION OF PTE CALCULATION

To go back, right click here and select Back. To go forward, right click here and select Forward. To refresh, right click here and select Refresh.

Back to OASIS | Home page

UNITED STATES PATENT AND TRADEMARK OFFICE

UNITED STATES DEPARTMENT OF COMMERCE
United States Patent and Trademark Office
Address: COMMISSIONER FOR PATENTS
P.O. Box 1450
Alexandria, Virginia 22313-1450
www.uspto.gov

MINTZ, LEVIN, COHN, FERRIS, GLOVSKY AND POPEO, P.C
ONE FINANCIAL CENTER
BOSTON, MA 02111

Mail Date: 05/13/2010

Applicant	: George L. Mayers	: DECISION ON REQUEST FOR
Patent Number	: 7615221	: RECALCULATION of PATENT
Issue Date	: 11/10/2009	: TERM ADJUSTMENT IN VIEW
Application No	: 10/897,530	: OF WYETH AND NOTICE OF INTENT TO
Filed	: 07/23/2004	: ISSUE CERTIFICATE OF CORRECTION
		:

The Request for Recalculation is **GRANTED** to the extent indicated.

The patent term adjustment has been determined to be **775** days. The USPTO will *sua sponte* issue a certificate of correction reflecting the amount of PTA days determined by the recalculation.

Prior to the issuance of the certificate of correction, the USPTO will afford patentee an opportunity to be heard and request reconsideration. Accordingly, patentee has **one month or thirty (30) days**, whichever is longer, to file a request for reconsideration of this patent term adjustment calculation. See 35 U.S.C. 154(b)(3)(B)(ii) and 37 CFR 1.322(a)(4). No extensions of time will be granted under 37 CFR 1.136.

Patentee should use document code PET.OP if electronically filing a request for reconsideration of this patent term adjustment calculation. The patentee must also include the information required by 37 CFR 1.705(b)(2) and the fee required by 37 CFR 1.18(e). If patentee does not file a timely request for reconsideration of this patent term adjustment calculation including the information required by 37 CFR 1.705(b)(2) and the fee required by 37 CFR 1.18(e), the USPTO will issue a certificate of correction reflecting the PTA determination noted above.

Patentee should be aware that in order to preserve the right to review in the United States District Court for the District of Columbia of the USPTO patent term adjustment determination, patentee must ensure that he or she also take the steps required under 35 U.S.C. 154(b)(4)(A) in a timely manner. Nothing in the request for recalculation should be construed as providing an alternative time frame for commencing a civil action under 35 U.S.C. 154(b)(4)(A).

Any questions concerning this decision should be directed to the Office of Patent Legal Administration at 571-272-7702.

UNITED STATES PATENT AND TRADEMARK OFFICE

Commissioner for Patents
United States Patent and Trademark Office
P.O. Box 1450
Alexandria, VA 22313-1450
www.uspto.gov

MAILED

JUN 07 2010

OFFICE OF PETITIONS

MINTZ, LEVIN, COHN, FERRIS, GLOVSKY AND POPEO, P.C
ONE FINANCIAL CENTER
BOSTON MA 02111

In re Patent No. 7,615,221	:	DECISION ON REQUEST FOR
Mayers et al.	:	RECONSIDERATION OF
Issue Date: November 10, 2009	:	PATENT TERM ADJUSTMENT
Application No. 10/897,530	:	AND
Filed: July 23, 2004	:	NOTICE OF INTENT TO ISSUE
Docket No. 39790-501F01US	:	CERTIFICATE OF CORRECTION

This is a decision on the petition filed on January 8, 2010, which is being treated as a petition under 37 CFR 1.705(d) requesting reconsideration of the patent term adjustment calculation.

The request for reconsideration of the patent term adjustment calculation is **GRANTED to the extent indicated herein**. The term of the above-identified patent is extended or adjusted by **five hundred seven (507) days**.

On January 8, 2010, patentee submitted a petition under 37 CFR 1.705(d) and fee. On April 22, 2010, the Office mailed a decision granting the petition under 37 CFR 1.705(d) to the extent that a certificate of correction would be issued indicating that the term of the patent was extended or adjusted by 507 days. On May 7, 2010, patentee filed a Request for Recalculation of Patent Term Adjustment in View of *Wyeth*. On May 13, 2010, the Office mailed a "DECISION ON REQUEST FOR RECALCULATION OF PATENT TERM ADJUSTMENT IN VIEW OF WYETH AND NOTICE OF INTENT TO ISSUE CERTIFICATE OF CORRECTION" indicating that the patent term adjustment had been determined to be 775 days.

The Office notes that the decision of May 13, 2010, was issued in error as it accorded patentee 268 more days of patent term adjustment than were warranted. Accordingly, the decision of

May 13, 2010, is withdrawn. The present decision supersedes the decision mailed on May 13, 2010.

The Office has determined that the patent term adjustment for the above-identified patent is **507 days**. The 268 additional days of adjustment will be removed.

The Office will *sua sponte* issue a certificate of correction. Pursuant to 37 CFR 1.322, the Office will not issue a certificate of correction without first providing assignee or patentee an opportunity to be heard. Accordingly, patentee is given **one (1) month or thirty (30) days**, whichever is longer, from the mail date of this decision to respond. No extensions of time will be granted under § 1.136.

The Office acknowledges the previous submission of the required fee of $200.00 set forth in 37 CFR 1.18(e).

This matter is being referred to the Certificates of Correction Branch for issuance of a certificate of correction. The Office will issue a certificate of correction indicating that the term of the above-identified patent is extended or adjusted by **507 days**.

Telephone inquiries specific to this matter should be directed to the undersigned at (571) 272-3211.

Christina Tartera Donnell

Christina Tartera Donnell
Senior Petitions Attorney
Office of Petitions

Enclosures: Copy of DRAFT Certificate of Correction and Copy of REVISED PAIR Screen

UNITED STATES PATENT AND TRADEMARK OFFICE

CERTIFICATE OF CORRECTION

PATENT : 7,615,221 B2

DATED : Nov. 10, 2009 **DRAFT**

INVENTOR(S) : Mayers et al.

It is certified that error appears in the above-identified patent and that said Letters Patent is hereby corrected as shown below:

On the cover page,

[*] Notice: Subject to any disclaimer, the term of this patent is extended or adjusted under 35 USC 154(b) by 239 days

Delete the phrase "by 239 days" and insert – by 507 days--

PALM INTRANET

Day : Sunday
Date: 6/6/2010
Time: 14:47:23

PTA Calculations for Application: 10/897530			
Application Filing Date:	07/23/2004	PTO Delay (PTO):	782
Issue Date of Patent:	11/10/2009	Three Years:	0
Pre-Issue Petitions:	0	Applicant Delay (APPL):	275
Post-Issue Petitions:	0	Total PTA (days):	507
PTO Delay Adjustment:	0		

File Contents History

Number	Date	Contents Description	PTO	APPL	START
93	06/06/2010	ADJUSTMENT OF PTA CALCULATION BY PTO		268	
90	05/10/2010	PETITION DECISION - GRANTED			
89	05/07/2010	PETITION ENTERED			
88	05/04/2010	POST ISSUE COMMUNICATION - CERTIFICATE OF CORRECTION			
87	04/22/2010	MAIL-RECORD A PETITION DECISION OF GRANTED FOR PATENT TERM ADJUSTMENT AFTER ISSUE			
86	04/22/2010	RECORD A PETITION DECISION OF GRANTED FOR PATENT TERM ADJUSTMENT AFTER ISSUE			
86	04/22/2010	RECORD A PETITION DECISION OF GRANTED FOR PATENT TERM ADJUSTMENT AFTER ISSUE			
85	04/21/2010	ADJUSTMENT OF PTA CALCULATION BY PTO	268		
85	04/21/2010	ADJUSTMENT OF PTA CALCULATION BY PTO			
84	01/08/2010	PETITION ENTERED			
83	11/10/2009	RECORDATION OF PATENT GRANT MAILED			
82	10/21/2009	ISSUE NOTIFICATION MAILED			
81.5	12/17/2008	PTA 36 MONTHS	513		
81	11/10/2009	PATENT ISSUE DATE USED IN PTA CALCULATION			
80	10/14/2009	EXPORT TO FINAL DATA CAPTURE			
79	10/13/2009	DISPATCH TO FDC			
78	10/07/2009	MAIL-PETITION DECISION - DISMISSED			
77	10/07/2009	PETITION DECISION - DISMISSED			
76	07/10/2009	PETITION ENTERED			
75	07/13/2009	APPLICATION IS CONSIDERED READY FOR ISSUE			
74	07/10/2009	ISSUE FEE PAYMENT VERIFIED			

73	07/10/2009	ISSUE FEE PAYMENT RECEIVED			
70	04/13/2009	MAIL NOTICE OF ALLOWANCE			
69	04/10/2009	NOTICE OF ALLOWANCE DATA VERIFICATION COMPLETED			
68	04/10/2009	CASE DOCKETED TO EXAMINER IN GAU			
67	04/06/2009	MAIL EXAMINER'S AMENDMENT			
66	03/25/2009	ISSUE REVISION COMPLETED			
65	03/25/2009	DOCUMENT VERIFICATION			
64	03/16/2009	EXAMINER'S AMENDMENT COMMUNICATION			
63	03/16/2009	NOTICE OF ALLOWABILITY			
62	03/12/2009	EXAMINER INTERVIEW SUMMARY RECORD (PTOL - 413)			
61	03/13/2009	PARALEGAL TD ACCEPTED			
60	03/12/2009	TERMINAL DISCLAIMER FILED			
57	12/18/2008	INFORMATION DISCLOSURE STATEMENT CONSIDERED			
56	02/06/2009	DATE FORWARDED TO EXAMINER			
55	12/18/2008	REQUEST FOR CONTINUED EXAMINATION (RCE)			
54	02/06/2009	DISPOSAL FOR A RCE / CPA / R129			
53	12/18/2008	REFERENCE CAPTURE ON IDS			
52	12/18/2008	INFORMATION DISCLOSURE STATEMENT (IDS) FILED			
51	12/18/2008	INFORMATION DISCLOSURE STATEMENT (IDS) FILED			
50	12/18/2008	WORKFLOW - REQUEST FOR RCE - BEGIN			
49	10/27/2008	FINISHED INITIAL DATA CAPTURE			
48	09/22/2008	EXPORT TO INITIAL DATA CAPTURE			
47	09/18/2008	MAIL EXAMINER'S AMENDMENT			
46	09/18/2008	MAIL NOTICE OF ALLOWANCE			
45	09/16/2008	ISSUE REVISION COMPLETED			
44	09/16/2008	DOCUMENT VERIFICATION			
43	09/16/2008	NOTICE OF ALLOWANCE DATA VERIFICATION COMPLETED			
42	09/16/2008	EXAMINER'S AMENDMENT COMMUNICATION			
41	09/15/2008	NOTICE OF ALLOWABILITY			
37	07/08/2008	DATE FORWARDED TO EXAMINER			
36	06/11/2008	RESPONSE AFTER NON-FINAL ACTION		92	34
35	06/11/2008	REQUEST FOR EXTENSION OF TIME - GRANTED			

34	12/11/2007	MAIL NON-FINAL REJECTION			
33	12/10/2007	NON-FINAL REJECTION			
28	09/29/2007	DATE FORWARDED TO EXAMINER			
27	09/27/2007	RESPONSE AFTER NON-FINAL ACTION		92	25
26	09/27/2007	REQUEST FOR EXTENSION OF TIME - GRANTED			
25	03/27/2007	MAIL NON-FINAL REJECTION			
24	03/22/2007	NON-FINAL REJECTION			
23	01/11/2007	DATE FORWARDED TO EXAMINER			
22	12/19/2006	RESPONSE TO ELECTION / RESTRICTION FILED		91	19
21	12/19/2006	REQUEST FOR EXTENSION OF TIME - GRANTED			
19	06/19/2006	MAIL RESTRICTION REQUIREMENT	269		-1
18	06/15/2006	REQUIREMENT FOR RESTRICTION / ELECTION			
17	02/28/2006	IFW TSS PROCESSING BY TECH CENTER COMPLETE			
16	02/28/2006	CASE DOCKETED TO EXAMINER IN GAU			
15	12/13/2004	PRELIMINARY AMENDMENT			
14	12/30/2004	APPLICATION RETURN FROM OIPE			
13	12/30/2004	APPLICATION RETURN TO OIPE			
12	12/30/2004	APPLICATION DISPATCHED FROM OIPE			
11	12/30/2004	APPLICATION IS NOW COMPLETE			
10	12/13/2004	ADDITIONAL APPLICATION FILING FEES			
9	12/13/2004	A STATEMENT BY ONE OR MORE INVENTORS SATISFYING THE REQUIREMENT UNDER 35 USC 115, OATH OF THE APPLIC			
8	12/13/2004	APPLICANT HAS SUBMITTED NEW DRAWINGS TO CORRECT CORRECTED PAPERS PROBLEMS			
7	10/13/2004	NOTICE MAILED--APPLICATION INCOMPLETE--FILING DATE ASSIGNED			
5	09/15/2004	CLEARED BY L&R (LARS)			
4	09/08/2004	REFERRED TO LEVEL 2 (LARS) BY OIPE CSR			
3	09/08/2004	CASE CLASSIFIED BY OIPE			
2	08/20/2004	IFW SCAN & PACR AUTO SECURITY REVIEW			
1	07/23/2004	INITIAL EXAM TEAM NN			

Search Another: Application# [ ] Search

EXPLANATION OF PTA CALCULATION

UNITED STATES PATENT AND TRADEMARK OFFICE

UNITED STATES DEPARTMENT OF COMMERCE
United States Patent and Trademark Office
Address: COMMISSIONER FOR PATENTS
P.O. Box 1450
Alexandria, Virginia 22313-1450
www.uspto.gov

FISH & RICHARDSON P.C.
P.O. Box 1022
MINNEAPOLIS, MN 55440-1022

Mail Date: 04/20/2010

Applicant	: Thomas E. Bednarz JR.	: DECISION ON REQUEST FOR
Patent Number	: 7665022	: RECALCULATION of PATENT
Issue Date	: 02/16/2010	: TERM ADJUSTMENT IN VIEW
Appliction No	: 10/897,538	: OF WYETH AND NOTICE OF INTENT TO
Filed	: 07/23/2004	: ISSUE CERTIFICATE OF CORRECTION
		:

The Request for Recalculation is **GRANTED** to the extent indicated.

The patent term adjustment has been determined to be **765** days. The USPTO will *sua sponte* issue a certificate of correction reflecting the amount of PTA days determined by the recalculation.

Prior to the issuance of the certificate of correction, the USPTO will afford patentee an opportunity to be heard and request reconsideration. Accordingly, patentee has **one month or thirty (30) days**, whichever is longer, to file a request for reconsideration of this patent term adjustment calculation. See 35 U.S.C. 154(b)(3)(B)(ii) and 37 CFR 1.322(a)(4). No extensions of time will be granted under 37 CFR 1.136.

Patentee should use document code PET.OP if electronically filing a request for reconsideration of this patent term adjustment calculation. The patentee must also include the information required by 37 CFR 1.705(b)(2) and the fee required by 37 CFR 1.18(e). If patentee does not file a timely request for reconsideration of this patent term adjustment calculation including the information required by 37 CFR 1.705(b)(2) and the fee required by 37 CFR 1.18(e), the USPTO will issue a certificate of correction reflecting the PTA determination noted above.

Patentee should be aware that in order to preserve the right to review in the United States District Court for the District of Columbia of the USPTO patent term adjustment determination, patentee must ensure that he or she also take the steps required under 35 U.S.C. 154(b)(4)(A) in a timely manner. Nothing in the request for recalculation should be construed as providing an alternative time frame for commencing a civil action under 35 U.S.C. 154(b)(4)(A).

Any questions concerning this decision should be directed to the Office of Patent Legal Administration at 571-272-7702.

UNITED STATES PATENT AND TRADEMARK OFFICE

Commissioner for Patents
United States Patent and Trademark Office
P.O. Box 1450
Alexandria, VA 22313-1450
www.uspto.gov

SMITH-HILL AND BEDELL, P.C.
16100 NW CORNELL ROAD,
SUITE 220
BEAVERTON OR 97006

COPY MAILED

SEP 0 6 2006

OFFICE OF PETITIONS

In re Application of	:	
Eichenseer, et al.	:	
Application No. 10/897,543	:	DECISION ON PETITION
Filed: July 23, 2004	:	TO WITHDRAW
Attorney Docket No. MR3529-10	:	FROM RECORD
	:	

This is a decision on the Request to Withdraw as attorney or agent of record under 37 C.F.R. § 1.36(b), filed may 26, 2006.

The request is **DISMISSED** as moot.

A review of the file record indicates that the power of attorney to Smith-Hill & Bedell, P.C. has been revoked by the assignee of the patent application on March 4, 2005. Accordingly, the request to withdraw under 37 C.F.R. § 1.36(b) is moot.

All future communications from the Office will continue to be directed to the below-listed address until otherwise notified by applicant.

Telephone inquires concerning this decision should be directed to April Wise at 571-272-1642.

April M. Wise
Petitions Examiner
Office of Petitions

cc: Rosenberg, Klein & Lee
3458 Ellicott Center Drive
Suite 101
Ellicott City, MD 21043

UNITED STATES PATENT AND TRADEMARK OFFICE

UNITED STATES DEPARTMENT OF COMMERCE
United States Patent and Trademark Office
Address: COMMISSIONER FOR PATENTS
P.O. Box 1450
Alexandria, Virginia 22313-1450
www.uspto.gov

MCANDREWS HELD & MALLOY, LTD
500 WEST MADISON STREET
SUITE 3400
CHICAGO, IL 60661

Mail Date: 04/28/2010

Applicant	: Ramkumar Prakasam	: DECISION ON REQUEST FOR
Patent Number	: 7630440	: RECALCULATION of PATENT
Issue Date	: 12/08/2009	: TERM ADJUSTMENT IN VIEW
Application No	: 10/897,546	: OF WYETH AND NOTICE OF INTENT TO
Filed	: 07/23/2004	: ISSUE CERTIFICATE OF CORRECTION
		:

The Request for Recalculation is **GRANTED** to the extent indicated.

The patent term adjustment has been determined to be **1435** days. The USPTO will *sua sponte* issue a certificate of correction reflecting the amount of PTA days determined by the recalculation.

Prior to the issuance of the certificate of correction, the USPTO will afford patentee an opportunity to be heard and request reconsideration. Accordingly, patentee has **one month or thirty (30) days**, whichever is longer, to file a request for reconsideration of this patent term adjustment calculation. See 35 U.S.C. 154(b)(3)(B)(ii) and 37 CFR 1.322(a)(4). No extensions of time will be granted under 37 CFR 1.136.

Patentee should use document code PET.OP if electronically filing a request for reconsideration of this patent term adjustment calculation. The patentee must also include the information required by 37 CFR 1.705(b)(2) and the fee required by 37 CFR 1.18(e). If patentee does not file a timely request for reconsideration of this patent term adjustment calculation including the information required by 37 CFR 1.705(b)(2) and the fee required by 37 CFR 1.18(e), the USPTO will issue a certificate of correction reflecting the PTA determination noted above.

Patentee should be aware that in order to preserve the right to review in the United States District Court for the District of Columbia of the USPTO patent term adjustment determination, patentee must ensure that he or she also take the steps required under 35 U.S.C. 154(b)(4)(A) in a timely manner. Nothing in the request for recalculation should be construed as providing an alternative time frame for commencing a civil action under 35 U.S.C. 154(b)(4)(A).

Any questions concerning this decision should be directed to the Office of Patent Legal Administration at 571-272-7702.

UNITED STATES PATENT AND TRADEMARK OFFICE

UNITED STATES DEPARTMENT OF COMMERCE
United States Patent and Trademark Office
Address: COMMISSIONER FOR PATENTS
P.O. Box 1450
Alexandria, Virginia 22313-1450
www.uspto.gov

CARR & FERRELL LLP
2200 GENG ROAD
PALO ALTO, CA 94303

Mail Date: 04/21/2010

Applicant	: Christopher Kantarjiev	: DECISION ON REQUEST FOR
Patent Number	: 7610145	: RECALCULATION of PATENT
Issue Date	: 10/27/2009	: TERM ADJUSTMENT IN VIEW
Appliction No	: 10/897,550	: OF WYETH AND NOTICE OF INTENT TO
Filed	: 07/23/2004	: ISSUE CERTIFICATE OF CORRECTION
		:

The Request for Recalculation is **GRANTED** to the extent indicated.

The patent term adjustment has been determined to be **1404** days. The USPTO will *sua sponte* issue a certificate of correction reflecting the amount of PTA days determined by the recalculation.

Prior to the issuance of the certificate of correction, the USPTO will afford patentee an opportunity to be heard and request reconsideration. Accordingly, patentee has **one month or thirty (30) days**, whichever is longer, to file a request for reconsideration of this patent term adjustment calculation. See 35 U.S.C. 154(b)(3)(B)(ii) and 37 CFR 1.322(a)(4). No extensions of time will be granted under 37 CFR 1.136.

Patentee should use document code PET.OP if electronically filing a request for reconsideration of this patent term adjustment calculation. The patentee must also include the information required by 37 CFR 1.705(b)(2) and the fee required by 37 CFR 1.18(e). If patentee does not file a timely request for reconsideration of this patent term adjustment calculation including the information required by 37 CFR 1.705(b)(2) and the fee required by 37 CFR 1.18(e), the USPTO will issue a certificate of correction reflecting the PTA determination noted above.

Patentee should be aware that in order to preserve the right to review in the United States District Court for the District of Columbia of the USPTO patent term adjustment determination, patentee must ensure that he or she also take the steps required under 35 U.S.C. 154(b)(4)(A) in a timely manner. Nothing in the request for recalculation should be construed as providing an alternative time frame for commencing a civil action under 35 U.S.C. 154(b)(4)(A).

Any questions concerning this decision should be directed to the Office of Patent Legal Administration at 571-272-7702.

UNITED STATES PATENT AND TRADEMARK OFFICE

Commissioner for Patents
United States Patent and Trademark Office
P.O. Box 1450
Alexandria, VA 22313-1450
www.uspto.gov

AKERMAN SENTERFITT
P.O. BOX 3188
WEST PALM BEACH, FL 33402-3188

COPY MAILED

OCT 10 2007

OFFICE OF PETITIONS

In re Application of :
Volodymyr Redko et al :
Application No. 10/897,551 :
Filed: July 23, 2004 :
Attorney Docket No. 8326-7 :

ON PETITION

This is a decision on the petition under 37 CFR 1.137(b), filed June 22, 2007, to revive the above-identified application.

The petition is **GRANTED**.

The above-identified application became abandoned for failure to reply in a timely manner to the non-final Office action mailed March 24, 2006, which set a shortened statutory period for reply of three (3) months. No extension of time under the provisions of 37 CFR 1.136(a) were obtained. Accordingly, the above-identified application became abandoned on June 25, 2006.

Telephone inquiries concerning this decision should be directed to Irvin Dingle at (571) 272-3210.

This matter is being referred to Technology Center AU 2858 for further processing.

Irvin Dingle
Petitions Examiner
Office of Petitions

cc: Neal R. Jetter
Akerman Senterfitt
222 Lake View Avenue, Suite 400
West Palm Beach, FL 33401-6183

UNITED STATES PATENT AND TRADEMARK OFFICE

Commissioner for Patents
United States Patent and Trademark Office
P.O. Box 1450
Alexandria, VA 22313-1450
www.uspto.gov

AKERMAN SENTERFITT
P.O. BOX 3188
WEST PALM BEACH FL 33402-3188

COPY MAILED

JUN 1 2 2008

OFFICE OF PETITIONS

In re Application of
Volodymyr Redko, et al.
Application No. 10/897,551
Filed: July 23, 2004
Attorney Docket No. 8326-7

DECISION ON PETITION
TO WITHDRAW
FROM RECORD

This is a decision on the Request to Withdraw as attorney or agent of record under 37 C.F.R. § 1.36(b), filed November 15, 2007.

The request is **APPROVED**.

A grantable request to withdraw as attorney/agent of record must be signed by every attorney/agent seeking to withdraw or contain a clear indication that one attorney is signing on behalf of another/others. A request to withdraw will not be approved unless at least 30 (thirty) days would remain between the date of approval and the later of the expiration date of a time to file a response or the expiration date of the maximum time period which can be extended under 37 C.F.R. § 1.136(a).

The request was signed by Neil R. Jetter on behalf of all attorneys of record who are associated with customer No. 30448.

All attorneys/agents associated with the Customer Number 30448 have been withdrawn.

Applicant is reminded that there is no attorney of record at this time.

The correspondence address of record has been changed and the new correspondence address is the address indicated below.

There are no pending Office actions at the present time.

Telephone inquiries concerning this decision should be directed to undersigned at 571-272-1642.

April M. Wise
Petitions Examiner
Office of Petitions

cc: ENERIZE CORPORATION
C/O ELENA SHEMBEL
4556 ROTHSCHILD DRIVE
CORAL SPRINGS, FL 33067-4134

UNITED STATES PATENT AND TRADEMARK OFFICE

UNITED STATES DEPARTMENT OF COMMERCE
United States Patent and Trademark Office
Address: COMMISSIONER FOR PATENTS
P.O. Box 1450
Alexandria, Virginia 22313-1450
www.uspto.gov

APPLICATION NUMBER	FILING OR 371(C) DATE	FIRST NAMED APPLICANT	ATTY. DOCKET NO./TITLE
10/897,551	07/23/2004	Volodymyr Redko	8326-7

CONFIRMATION NO. 2152

POWER OF ATTORNEY NOTICE

30448
AKERMAN SENTERFITT
P.O. BOX 3188
WEST PALM BEACH, FL 33402-3188

OC000000030442049

Date Mailed: 06/12/2008

NOTICE REGARDING CHANGE OF POWER OF ATTORNEY

This is in response to the Power of Attorney filed 11/15/2007.

- The withdrawal as attorney in this application has been accepted. Future correspondence will be mailed to the new address of record. 37 CFR 1.33.

/amwise/

Office of Data Management, Application Assistance Unit (571) 272-4000, or (571) 272-4200, or 1-888-786-0101

UNITED STATES PATENT AND TRADEMARK OFFICE

Commissioner for Patents
United States Patent and Trademark Office
P.O. Box 1450
Alexandria, VA 22313-1450
www.uspto.gov

VIERRA MAGEN MARCUS & DENIRO LLP
575 MARKET STREET SUITE 2500
SAN FRANCISCO CA 94105

COPY MAILED

NOV 2 7 2007

OFFICE OF PETITIONS

In re Application of :
Greg Chambers et al. :
Application No. 10/897,573 :
Filed: July 22, 2004 :
Attorney Docket No. ADV001.00 :

ON PETITION

This is a decision on the petition under 37 CFR 1.137(b), filed November 1, 2007, to revive the above-identified application.

The petition is **GRANTED**.

The above-identified application became abandoned for failure to submit the issue fee in a timely manner in reply to the Notice of Allowance mailed July 10, 2006, which set a statutory period for reply of three (3) months. Accordingly, by operation of law, the above-identified application became abandoned on October 11, 2006.

The petition satisfies the conditions for revival pursuant to the provisions of 37 CFR 1.137(b) in that (1) the reply in the form of the issue fee; (2) the petition fee of $770; and (3) the required statement of unintentional delay have been received. Accordingly, the issue fee is accepted as having been unintentionally delayed.

It is not apparent whether the person signing the statement of the unintentional delay was in a position to have firsthand knowledge of the facts and circumstances of the delay at issue. Nevertheless, such statement is being treated as having been made as the result of a reasonable inquiry into the facts and circumstances of such delay. See 37 CFR 10.18(b) and Changes to Patent Practice and Procedure; Final rule Notice, 62 Fed. Reg. 53131, 53178 (October 10, 1997), 1203 Off. Gaz. Pat. Office 63, 103 (October 21, 1997). In the event that such an inquiry has not been made, petitioner must make such an inquiry. If such inquiry results in the discovery that it is not correct that the entire delay in filing the required reply from the due date for the reply until the filing of a grantable petition pursuant of 37 CFR 1.137(b) was unintentional, petitioner must notify the Office.

Telephone inquiries concerning this decision should be directed to Carl Friedman at (571) 272-6842.

The application file is being referred to the Office of Patent Publication.

David Bucci
Petitions Examiner
Office of Petitions

UNITED STATES PATENT AND TRADEMARK OFFICE

Commissioner for Patents
United States Patent and Trademark Office
P.O. Box 1450
Alexandria, VA 22313-1450
www.uspto.gov

COPY MAILED
NOV 0 9 2006
OFFICE OF PETITIONS

IPSG, P.C.
P.O. BOX 700640
SAN JOSE, CA 95170-0640

In re Application of	:	
HASS, et al.	:	
Application No. 10/897,576	:	DECISION ON PETITION
Filed: July 23, 2004	:	TO WITHDRAW
Attorney Docket No. RZMI-P117	:	FROM RECORD
	:	

This is a decision on the Request to Withdraw as attorney or agent of record under 37 C.F.R. § 1.36(b), filed August 01, 2006.

The request is **NOT APPROVED**.

A grantable request to withdraw as attorney/agent of record must be signed by every attorney/agent seeking to withdraw or contain a clear indication that one attorney is signing on behalf of another/others. A request to withdraw will not be approved unless at least 30 (thirty) days would remain between the date of approval and the later of the expiration date of a time to file a response or the expiration date of the maximum time period which can be extended under 37 C.F.R. § 1.136(a).

The Office cannot approve the request at this time. In order to request or take action in a patent matter, the assignee must establish its ownership of the patent to the satisfaction of the Director. In this regard, a Statement under 37 CFR 3.73(b) must have either: (i) documentary evidence of a chain of title from the original owner to the assignee (*e.g.*, copy of an executed assignment), and a statement affirming that the documentary evidence of the chain of title from the original owner to the assignee was or concurrently is being submitted for recordation pursuant to § 3.11; or (ii) a statement specifying where documentary evidence of a chain of title from the original owner to the assignee is recorded in the assignment records of the Office (*e.g.*, reel and frame number). The power of attorney filed on November 17, 2004 does not include one of the above two options.

All future communications from the Office will continue to be directed to the above-listed address until otherwise properly notified by applicant.

There is no outstanding Office action that requires a reply from the applicant.

Telephone inquiries concerning this decision should be directed to Patricia Volpe at 571-272-6825.

Patricia Volpe
Petitions Examiner
Office of Petitions

cc: Raza Microelectronics, Inc.
Legal Department
18920 Forge Drive
Cupertino, CA 95014-0701

UNITED STATES PATENT AND TRADEMARK OFFICE

Commissioner for Patents
United States Patent and Trademark Office
P.O. Box 1450
Alexandria, VA 22313-1450
www.uspto.gov

IPSG, P.C.
P.O. BOX 700640
SAN JOSE, CA 95170-0640

COPY MAILED
NOV 0 9 2006
OFFICE OF PETITIONS

In re Application of	:	
HASS	:	
Application No. 10/897,577	:	DECISION ON PETITION
Filed: July 23, 2004	:	TO WITHDRAW
Attorney Docket No. RZMI-P105	:	FROM RECORD
	:	

This is a decision on the Request to Withdraw as attorney or agent of record under 37 C.F.R. § 1.36(b), filed August 01, 2006.

The request is **NOT APPROVED**.

A grantable request to withdraw as attorney/agent of record must be signed by every attorney/agent seeking to withdraw or contain a clear indication that one attorney is signing on behalf of another/others. A request to withdraw will not be approved unless at least 30 (thirty) days would remain between the date of approval and the later of the expiration date of a time to file a response or the expiration date of the maximum time period which can be extended under 37 C.F.R. § 1.136(a).

The Office cannot approve the request at this time. In order to request or take action in a patent matter, the assignee must establish its ownership of the patent to the satisfaction of the Director. In this regard, a Statement under 37 CFR 3.73(b) must have either: (i) documentary evidence of a chain of title from the original owner to the assignee (*e.g.*, copy of an executed assignment), and a statement affirming that the documentary evidence of the chain of title from the original owner to the assignee was or concurrently is being submitted for recordation pursuant to § 3.11; or (ii) a statement specifying where documentary evidence of a chain of title from the original owner to the assignee is recorded in the assignment records of the Office (*e.g.*, reel and frame number). The power of attorney filed on November 17, 2004 does not include one of the above two options.

All future communications from the Office will continue to be directed to the above-listed address until otherwise properly notified by applicant.

A Review of the file discloses that an Advisory action was mailed on October 25, 2006. To date, there is no indication that a reply to the Office action has been received.

Telephone inquiries concerning this decision should be directed to Patricia Volpe at 571-272-6825.

Patricia Volpe
Petitions Examiner
Office of Petitions

cc: Raza Microelectronics, Inc.
Legal Department
18920 Forge Drive
Cupertino, CA 95014-0701

UNITED STATES PATENT AND TRADEMARK OFFICE

Commissioner for Patents
United States Patent and Trademark Office
P.O. Box 1450
Alexandria, VA 22313-1450
www.uspto.gov

IPSG, P.C.
P.O. BOX 700640
SAN JOSE, CA 95170-0640

COPY MAILED

APR 10 2007

OFFICE OF PETITIONS

In re Application of Hass :
Application No. 10/897,577 :
Filing Date: July 23, 2004 :
Attorney Docket No. RZMI-P105 :

Decision on Petition

This is a decision on the petition under 37 CFR 1.137(b), filed December 5, 2006, to revive the above-identified application.

The petition is **granted**.

The above-identified application became abandoned for failure to reply in a timely and proper manner to the final Office action mailed April 25, 2006, which set a shortened statutory period for reply of three (3) months. An extension of time under the provisions of 37 CFR 1.136(a) was obtained and a reply was filed September 25, 2006. The reply was deemed improper and the application became abandoned on September 26, 2006.

The instant petition requests revival of the application.

Petitioner has met the requirements to revive the above-identified application pursuant to 37 CFR 1.137(b). Therefore, the petition is granted and the application is revived.

<u>The Revocation of Power of Attorney and Change of Address Form:</u>

The Revocation form has not been entered. William Caraccio signed the form. The form fails to identify William Caraccio's position with the "assignee" or state Caraccio has the power to sign the form on behalf of the assignee.

The form states a statement under 37 CFR 3.73(b) is enclosed. However, the Office is unable to locate the statement. A search of assignment records fails to indicate an assignment has been recorded for the instant application. The Office notes an assignment was recorded for the parent application, but that assignment does not cover the instant application because this application is a continuation-in-part. See MPEP 306.

The representatives of record and the address of record have not been changed.

While a courtesy copy of this decision is being mailed to the person signing the instant petition, all future correspondence will be directed solely to the address currently of record until such time as appropriate instructions are received to the contrary.

Technology Center Art Unit 2186 will be informed of the instant decision and the RCE and amendment filed with the petition will be entered and considered in due course.

Telephone inquiries regarding this communication should be directed to Petitions Attorney Steven Brantley at (571) 272-3203.

Charles Steven Brantley
Senior Petitions Attorney
Office of Petitions

cc: Stevens Law Group
PO Box 1667
San Jose, CA 95109

UNITED STATES PATENT AND TRADEMARK OFFICE

UNITED STATES DEPARTMENT OF COMMERCE
United States Patent and Trademark Office
Address: COMMISSIONER FOR PATENTS
P.O. Box 1450
Alexandria, Virginia 22313-1450
www.uspto.gov

ZILKA-KOTAB, PC- RMI
P.O. BOX 721120
SAN JOSE, CA 95172-1120

Mail Date: 04/21/2010

Applicant	: David T. Hass	: DECISION ON REQUEST FOR
Patent Number	: 7627721	: RECALCULATION of PATENT
Issue Date	: 12/01/2009	: TERM ADJUSTMENT IN VIEW
Appliction No	: 10/897,577	: OF WYETH AND NOTICE OF INTENT TO
Filed	: 07/23/2004	: ISSUE CERTIFICATE OF CORRECTION
		:

The Request for Recalculation is **GRANTED** to the extent indicated.

The patent term adjustment has been determined to be **0** days. The USPTO will *sua sponte* issue a certificate of correction reflecting the amount of PTA days determined by the recalculation.

Prior to the issuance of the certificate of correction, the USPTO will afford patentee an opportunity to be heard and request reconsideration. Accordingly, patentee has **one month or thirty (30) days**, whichever is longer, to file a request for reconsideration of this patent term adjustment calculation. See 35 U.S.C. 154(b)(3)(B)(ii) and 37 CFR 1.322(a)(4). No extensions of time will be granted under 37 CFR 1.136.

Patentee should use document code PET.OP if electronically filing a request for reconsideration of this patent term adjustment calculation. The patentee must also include the information required by 37 CFR 1.705(b)(2) and the fee required by 37 CFR 1.18(e). If patentee does not file a timely request for reconsideration of this patent term adjustment calculation including the information required by 37 CFR 1.705(b)(2) and the fee required by 37 CFR 1.18(e), the USPTO will issue a certificate of correction reflecting the PTA determination noted above.

Patentee should be aware that in order to preserve the right to review in the United States District Court for the District of Columbia of the USPTO patent term adjustment determination, patentee must ensure that he or she also take the steps required under 35 U.S.C. 154(b)(4)(A) in a timely manner. Nothing in the request for recalculation should be construed as providing an alternative time frame for commencing a civil action under 35 U.S.C. 154(b)(4)(A).

Any questions concerning this decision should be directed to the Office of Patent Legal Administration at 571-272-7702.

UNITED STATES PATENT AND TRADEMARK OFFICE

Commissioner for Patents
United States Patent and Trademark Office
P.O. Box 1450
Alexandria, VA 22313-1450
www.uspto.gov

HARMAN - BRINKS HOFER CHICAGO
BRINKS HOFER GILSON & LIONE
P.O. BOX 10395
CHICAGO, IL 60610

COPY MAILED

JUL 27 2009

OFFICE OF PETITIONS

In re Application of	:	
Stefan Wolf, et al	:	
Application No. 10/897,595	:	DECISION ON PETITION
Filed: July 23, 2004	:	TO WITHDRAW
Attorney Docket No. 11336-752 (P02100US)	:	FROM RECORD
	:	

This is a decision on the Request to Withdraw as attorney or agent of record under 37 C.F.R. § 1.36(b), filed June 15, 2009.

The request is **DISMISSED** as moot.

A review of the file record indicates that the power of attorney to Harman – Brinks Hofer Chicago, Brinks, Hofer, Gilson & Lione has been revoked by the assignee of the patent application on June 26, 2009. Accordingly, the request to withdraw under 37 C.F.R. § 1.36(b) is moot.

All future communications from the Office will continue to be directed to the below-listed address until otherwise notified by applicant.

Telephone inquires concerning this decision should be directed to undersigned at 571-272-1642. All other inquiries concerning the examination or status of this application should be directed to the Technology Center.

/AMW/
April M. Wise
Petitions Examiner
Office of Petitions

cc: ROBERT P. HART, ESQ.
HARMAN INTERNATIONAL INDUSTRIES, INCORPORATED
8500 BALBOA BOULEVARD
NORTHBRIDGE, CA 91329

SPE RESPONSE FOR CERTIFICATE OF CORRECTION

Paper No.: _____

DATE : 11/09/09

TO SPE OF : ART UNIT 3628

SUBJECT : Request for Certificate of Correction for Appl. No.: 10897600 Patent No.: 7415419

Please respond to this request for a certificate of correction within 7 days.

FOR IFW FILES:

Please review the requested changes/corrections as shown in the **COCIN** document(s) in the IFW application image. No new matter should be introduced, nor should the scope or meaning of the claims be changed.

Please complete the response (see below) and forward the completed response to scanning using document code **COCX**.

FOR PAPER FILES:

Please review the requested changes/corrections as shown in the attached certificate of correction. Please complete this form (see below) and forward it with the file to:

Certificates of Correction Branch (C of C)
Randolph Square 9C62-D
Palm Location 7580
[redacted]

Lamonte Newsome
Certificates of Correction Branch
703-756-1574

Thank You For Your Assistance

The request for issuing the above-identified correction(s) is hereby:
Note your decision on the appropriate box.

- ☒ **Approved** — **All** changes apply.
- ☐ **Approved in Part** — Specify below which changes **do not** apply.
- ☐ **Denied** — State the reasons for denial below.

Comments: _____

John W. Hayes
SPE

3628
Art Unit

UNITED STATES PATENT AND TRADEMARK OFFICE

COMMISSIONER FOR PATENTS
UNITED STATES PATENT AND TRADEMARK OFFICE
P.O. BOX 1450
ALEXANDRIA, VA 22313-1450
www.uspto.gov

JEFFER, MANGELS,
BUTLER & MARMARO, LLP
1900 AVENUE OF THE STARS
7TH FLOOR
LOS ANGELES, CA 90067

COPY MAILED

FEB 06 2006

OFFICE OF PETITIONS

In re Application of: :
Artwohl et al. :
Application No. 10/897,622 : DECISION ON
Filed: July 23, 2004 : PETITION UNDER
Title of Invention: : 37 CFR 1.137(b)
SOFT-COATED GLASS PANE REFRIGERATOR:
DOOR CONSTRUCTION AND METHOD OF :
MAKING SAME :

This is a decision on the petition under 37 CFR 1.137(b), filed November 21, 2005 (Certificate of Transmission dated November 18, 2005), to revive the above-identified application. The petition is being treated under the unintentional provisions of 37 CFR 1.137(f).

This Petition is hereby **granted**.

The above-identified application became abandoned pursuant to 35 USC 122 (b)(2)(B)(iii) for failure to timely notify the Office of the filing of an application in a foreign country, or under a multinational international agreement, the requires publication of applications 18 months after filing.

A petition under 37 CFR 1.137(f) must be accompanied by: (1) the reply, which is met by the notification of such filing in a foreign country or under a multinational treaty[1]; (2) the petition fee as set forth in 37 CFR 1.17(m); and (3) a statement that the entire delay in filing the required reply from the due date of the reply until the filing of a grantable petition was unintentional. The Commissioner may require additional information where there is a question whether the delay was unintentional.

[1] The filing of a petition under this section will not relieve application of the obligation to reply to any outstanding Office action.

The instant petition has been found in compliance with 37 CFR 1.137(f). Accordingly, the failure to timely notify the Office of a foreign or international filing within 45 days as provided by 35 USC 122(b)(2)(B)(iii) is accepted as having been unintentionally delayed.

The previous Request and Certification under 35 U.S.C. § 122(b)(2)(B)(I) has been rescinded. A Communication Regarding Rescission of Nonpublication Request indicating a projected publication date of May 18, 2006, accompanies the present petition.

This application is being referred to the Publishing Division for publishing of the application in due course.

Telephone inquiries concerning this matter should be directed to the undersigned at (571) 272-3232.

Derek L. Woods
Attorney
Office of Petitions

Enclosure: Communication Regarding Rescission of Nonpublication Request

UNITED STATES PATENT AND TRADEMARK OFFICE

UNITED STATES DEPARTMENT OF COMMERCE
United States Patent and Trademark Office
Address: COMMISSIONER FOR PATENTS
P.O. Box 1450
Alexandria, Virginia 22313-1450
www.uspto.gov

APPLICATION NUMBER	FILING/RECEIPT DATE	FIRST NAMED APPLICANT	ATTY. DOCKET NO.
10/897,622	07/23/2004	Paul J. Artwohl	60816-5135

CONFIRMATION NO. 3931

24574
JEFFER, MANGELS, BUTLER & MARMARO, LLP
1900 AVENUE OF THE STARS, 7TH FLOOR
LOS ANGELES, CA 90067

Date Mailed: 02/06/2006

Communication Regarding Rescission Of Nonpublication Request and/or Notice of Foreign Filing

Applicant's rescission of the previously-filed nonpublication request and/or notice of foreign filing is acknowledged. The paper has been reflected in the Patent and Trademark Office's (USPTO's) computer records so that the earliest possible projected publication date can be assigned.

The projected publication date is 05/18/2006.

If applicant rescinded the nonpublication request before or on the date of "foreign filing,"[1] then no notice of foreign filing is required.

If applicant foreign filed the application after filing the above application and before filing the rescission, and the rescission did not also include a notice of foreign filing, then a notice of foreign filing (not merely a rescission) is required to be filed within 45 days of the date of foreign filing. See 35 U.S.C. § 122(b)(2)(B)(iii), and Clarification of the United States Patent and Trademark Office's Interpretation of the Provisions of 35 U.S.C. § 122(b)(2)(B)(ii)-(iv), 1272 Off. Gaz. Pat. Office 22 (July 1, 2003).

If a notice of foreign filing is required and is not filed within 45 days of the date of foreign filing, then the application becomes abandoned pursuant to 35 U.S.C. § 122(b)(2)(B)(iii). In this situation, applicant should either file a petition to revive or notify the Office that the application is abandoned. See 37 CFR 1.137(f). Any such petition to revive will be forwarded to the Office of Petitions for a decision. Note that the filing of the petition will not operate to stay any period of reply that may be running against the application.

Questions regarding petitions to revive should be directed to the Office of Petitions at (571) 272-3282. Questions regarding publications of patent applications should be directed to the patent application publication hotline at (703) 605-4283 or by e-mail pgpub@uspto.gov.

[1] Note, for purpose of this notice, that "foreign filing" means "filing an application directed to the same invention in another country, or under a multilateral international agreement, that requires publication of applications 18 months after filing".

UNITED STATES PATENT AND TRADEMARK OFFICE

Commissioner for Patents
United States Patent and Trademark Office
P.O. Box 1450
Alexandria, VA 22313-1450
www.uspto.gov

BSH HOME APPLIANCES CORPORATION
INTELLECTUAL PROPERTY DEPARTMENT
100 BOSCH BOULEVARD
NEW BERN NC 28562

COPY MAILED

NOV 14 2007

OFFICE OF PETITIONS

In re Patent No. 6,998,585
Issue Date: 02/14/2006
Application No. 10/897,641
Filed: 07/23/2004
Attorney Docket No. 002P00096WOUS

: PETITION UNDER 37 CFR 1.78(a)(3)
: AND 1.55 AND REQUEST FOR
: CERTIFICATE OF CORRECTION

This is a decision on the petition under 37 CFR 1.78(a)(3), filed May 29, 2007, seeking to add an unintentionally delayed claim under 35 U.S.C. §§ 120 and 365(c) for the benefit of priority to prior-filed PCT Application No. PCT/EP03/00508 filed January 20, 2003, by way of a certificate of correction. Additionally, it appears that petitioner wishes to perfect a claim for foreign priority under 35 U.S.C. § 119(a)-(d) to German Application No. 102 02 493.6 filed January 23, 2002, after the issuance of the patent by way of a certificate of correction. Therefore, the petition will also be treated under 37 CFR 1.55. The Office will first address the petition under 37 CFR 1.55.

As to the benefit claim under 37 CFR 1.55:

Under the rule (37 CFR 1.55(a)(2)), an applicant who wishes to secure the right of priority must comply with certain formal requirements within a specific time period. If applicant does not comply with these requirements, the right of priority is lost and cannot thereafter be asserted.

A review of the record reveals a claim for foreign priority under 35 U.S.C. § 119 was presented in the declaration on July 23, 2004; however, no certified copy of the priority document was filed in the application before the issuance of the above-captioned patent. Rather, applicant submitted a copy of WO 03/063550 A1.

Specifically, the requirements of the rule are (a) that the applicant must file a claim for the right, (b) he or she must also file a certified copy of the original foreign application, and (c) these papers must be filed within a certain time limit. The maximum time limit specified in the rule is that the claim for priority and the priority papers must both be filed before the patent is granted. See 37 CFR 1.55(a)(2). If the required papers are not filed within the time limit set the right of priority is lost. Since the certified copy of the priority document was not, as required by the rule,

filed in the above-identified application before the patent was granted, the petition under 37 CFR 1.55 is **DISMISSED**.

With respect to the concurrently filed request for certificate of correction, a claim to foreign priority benefits cannot be perfected via a certificate of correction if the requirements of 35 U.S.C. § 119 and 37 CFR 1.55 have not been satisfied in the patented application or, if applicable, its parent. See In re Van Esdonk, 187 USPQ 671 (Comm'r. Pat.1975). As such, the request for a certificate of correction must also be **dismissed as moot**. See MPEP 201.16.

However, a reissue was granted in Brenner v. State of Israel, 400 F.2d 789; 158 USPQ 584 (D.C. Cir. 1968), where the only ground argued was applicant's failure to file the certified copy of the original foreign application under 35 U.S.C. § 119 before the patent was granted. Under the circumstances of this case, petitioner may wish to seek relief from his predicament by way of reissue under 35 USC § 251. Id. See also 65 *F.R.* 57024, supra; MPEP §§ 201.16, 1402.

As to the benefit claim under 37 CFR 1.78(a)(3):

A review of the file record fails to disclose that a claim for the benefit of priority to the prior-filed PCT application was made within the time period set forth in 37 CFR 1.78(a)(2)(ii) and further failed to include a proper reference to the prior-filed application as required by 37 CFR 1.78(a)(2)(i) and 1.78(a)(2)(iii).

The instant application was filed on July 23, 2004. Therefore, since this application was filed after November 29, 2000, a petition under 37 CFR 1.78(a)(3), along with submission of a certificate of correction, is the appropriate avenue of relief to accept a late claim for the benefit of priority to a prior-filed international application after issuance of the application into a patent. See MPEP § 1481.

Pursuant to MPEP § 1481.03(II),

> Where 35 U.S.C. 120 and 365(c) priority based on an international application is to be asserted or corrected in a patent via a Certificate of Correction, the following conditions must be satisfied:
>
> (A) all requirements set forth in 37 CFR 1.78(a)(1) must have been met in the application which became the patent to be corrected;
>
> (B) it must be clear from the record of the patent and the parent application(s) that priority is appropriate (see MPEP § 201.11); and
>
> (C) the patentee must submit with the request for the certificate copies of documentation showing designation of states and any other information needed to make it clear from the record that the 35 U.S.C. 120 priority is

> appropriate. See MPEP § 201.13(b) as to the requirements for 35 U.S.C. 120 priority based on an international application.

> If all the above-stated conditions are satisfied, a certificate of correction can be used to amend the patent to make reference to a prior copending application, or to correct an incorrect reference to the prior copending application. Note In re Schuurs, 218 USPQ 443 (Comm'r Pat. 1983) which suggests that a Certificate of Correction is an appropriate remedy for correcting, in a patent, reference to a prior copending application. Also, note In re Lambrech, 202 USPQ 620 (Comm'r Pat. 1976), citing In re Van Esdonk, 187 USPQ 671 (Comm'r Pat. 1975).

Unfortunately, petitioner identified the claims for priority to both prior-filed PCT Application No. PCT/EP03/00508 and German Application No. 102 02 493.6. Petitioner is permitted to amend the patent to make reference only to prior-filed PCT Application No. PCT/EP03/00508 via a certificate of correction. Therefore the certificate of correction submitted with the present petition is improper because it incorrectly lists German Application No. 102 02 493.6 under the Foreign Application Priority Data. Accordingly, the petition under 37 CFR 1.78(a)(3) is **DISMISSED** without prejudice upon the filing of a **renewed** petition under 37 CFR 1.78(a)(3), accompanied by a new request for a certificate of correction, which correctly lists only prior-filed PCT Application No. PCT/EP03/00508. Petitioner must submit the renewed petition under 37 CFR 1.78(a)(3) within **TWO MONTHS** of the mailing date of this decision. No extensions of time are available and no additional fees are required upon filing the renewed petition.

Any inquiries concerning this decision may be directed to undersigned at (571) 272-3211.

C. T. Donnell

Christina Tartera Donnell
Senior Petitions Attorney
Office of Petitions

UNITED STATES PATENT AND TRADEMARK OFFICE

Commissioner for Patents
United States Patent and Trademark Office
P.O. Box 1450
Alexandria, VA 22313-1450
www.uspto.gov

BSH HOME APPLIANCES CORPORATION
INTELLECTUAL PROPERTY DEPARTMENT
100 BOSCH BOULEVARD
NEW BERN NC 28562

COPY MAILED

JAN 28 2008

OFFICE OF PETITIONS

In re Patent No. 6,998,585	: PETITION UNDER 37 CFR 1.78(a)(3)
Issue Date: 02/14/2006	: AND REQUEST FOR
Application No. 10/897,641	: CERTIFICATE OF CORRECTION
Filed: 07/23/2004	:
Attorney Docket No. 002P00096WOUS	:

This is a decision on the renewed petition under 37 CFR 1.78(a)(3), filed January 16, 2008, seeking to add an unintentionally delayed claim under 35 U.S.C. §§ 120 and 365(c) for the benefit of priority to prior-filed PCT Application No. PCT/EP03/00508 filed January 20, 2003, by way of a certificate of correction.

The petition is **granted**.

A review of the file record fails to disclose that a claim for the benefit of priority to the above-noted, prior-filed PCT application was made within the time period set forth in 37 CFR 1.78(a)(2)(ii) and further failed to include a proper reference to the prior-filed application as required by 37 CFR 1.78(a)(2)(i) and 1.78(a)(2)(iii).

The instant application was filed July 23, 2004. Therefore, since this application was filed after November 29, 2000, a petition under 37 CFR 1.78(a)(3), along with submission of a Certificate of Correction, is the appropriate avenue of relief to accept a late claim for the benefit of priority to a prior-filed PCT application after issuance of the application into a patent. *See* MPEP 1481.

A petition for acceptance of a claim for late priority under 37 CFR 1.78(a)(3) must be accompanied by:

(1) the reference required by 35 U.S.C. § 120 and 37 CFR 1.78(a)(2)(i) of the prior-filed application, unless previously submitted;

(2) the surcharge set forth in § 1.17(t); and

(3) a statement that the entire delay between the date the claim was due under 37 CFR 1.78(a)(2)(ii) and the date the claim was filed was unintentional. The Director may require additional information where there is a question whether the delay was unintentional.

As the petition for acceptance of an unintentionally delayed claim for the benefit of priority under 35 U.S.C. §§ 120 and 365(c) to the above-noted, prior-filed PCT application satisfies the conditions of 37 CFR 1.78(a)(3), the petition is granted.

A corrected Filing Receipt, which includes the priority claim to the above-noted, prior-filed PCT application, accompanies this decision on petition.

Petitioner is advised that the granting of this petition and the mailing of a corrected Filing Receipt should not be viewed as an indication that a determination has been made that this application is entitled to claim benefit of the prior-filed application. A determination that applicant is entitled to claim benefit of the prior-filed application will be made by the Examiner prior to the mailing of a certificate of correction.

Any inquiries concerning this decision may be directed to the undersigned at (571) 272-3211.

This application is being referred to the Certificates of Correction Branch for processing the request for a certificate of correction in accordance with this decision on the petition under 37 CFR 1.78(a)(3).

C. T. Donnell

Christina Tartera Donnell
Senior Petitions Attorney
Office of Petitions

ATTACHMENT: Corrected Filing Receipt

UNITED STATES PATENT AND TRADEMARK OFFICE

UNITED STATES DEPARTMENT OF COMMERCE
United States Patent and Trademark Office
Address: COMMISSIONER FOR PATENTS
P.O. Box 1450
Alexandria, Virginia 22313-1450
www.uspto.gov

APPLICATION NUMBER	FILING or 371(c) DATE	GRP ART UNIT	FIL FEE REC'D	ATTY.DOCKET.NO	TOT CLAIMS	IND CLAIMS
10/897,641	07/23/2004	3742	1070	2002P00096WOUS	17	1

CONFIRMATION NO. 3545

CORRECTED FILING RECEIPT

46726
BSH HOME APPLIANCES CORPORATION
INTELLECTUAL PROPERTY DEPARTMENT
100 BOSCH BOULEVARD
NEW BERN, NC 28562

OC000000027930711

Date Mailed: 01/25/2008

Receipt is acknowledged of this non-provisional patent application. The application will be taken up for examination in due course. Applicant will be notified as to the results of the examination. Any correspondence concerning the application must include the following identification information: the U.S. APPLICATION NUMBER, FILING DATE, NAME OF APPLICANT, and TITLE OF INVENTION. Fees transmitted by check or draft are subject to collection. Please verify the accuracy of the data presented on this receipt. **If an error is noted on this Filing Receipt, please write to the Office of Initial Patent Examination's Filing Receipt Corrections. Please provide a copy of this Filing Receipt with the changes noted thereon. If you received a "Notice to File Missing Parts" for this application, please submit any corrections to this Filing Receipt with your reply to the Notice. When the USPTO processes the reply to the Notice, the USPTO will generate another Filing Receipt incorporating the requested corrections**

Applicant(s)

Klaus Erdmann, New Bern, NC;

Assignment For Published Patent Application

BSH Bosch und Siemens Hausgerate GmbH, Munich, GERMANY

Power of Attorney: The patent practitioners associated with Customer Number 000046726

Domestic Priority data as claimed by applicant

This application is a CON of PCT/EP03/00508 02/20/2003

Foreign Applications

EUROPEAN PATENT OFFICE (EPO) PCT/EP03/00508 01/20/2003
GERMANY 10202493.6 01/23/2002

If Required, Foreign Filing License Granted: 09/21/2004

The country code and number of your priority application, to be used for filing abroad under the Paris Convention, is **US 10/897,641**

Projected Publication Date: Not Applicable

Non-Publication Request: No

Early Publication Request: No

Title

CONTROL UNIT FOR A HOUSEHOLD APPLIANCE

Preliminary Class

219

PROTECTING YOUR INVENTION OUTSIDE THE UNITED STATES

Since the rights granted by a U.S. patent extend only throughout the territory of the United States and have no effect in a foreign country, an inventor who wishes patent protection in another country must apply for a patent in a specific country or in regional patent offices. Applicants may wish to consider the filing of an international application under the Patent Cooperation Treaty (PCT). An international (PCT) application generally has the same effect as a regular national patent application in each PCT-member country. The PCT process **simplifies** the filing of patent applications on the same invention in member countries, but **does not result** in a grant of "an international patent" and does not eliminate the need of applicants to file additional documents and fees in countries where patent protection is desired.

Almost every country has its own patent law, and a person desiring a patent in a particular country must make an application for patent in that country in accordance with its particular laws. Since the laws of many countries differ in various respects from the patent law of the United States, applicants are advised to seek guidance from specific foreign countries to ensure that patent rights are not lost prematurely.

Applicants also are advised that in the case of inventions made in the United States, the Director of the USPTO must issue a license before applicants can apply for a patent in a foreign country. The filing of a U.S. patent application serves as a request for a foreign filing license. The application's filing receipt contains further information and guidance as to the status of applicant's license for foreign filing.

Applicants may wish to consult the USPTO booklet, "General Information Concerning Patents" (specifically, the section entitled "Treaties and Foreign Patents") for more information on timeframes and deadlines for filing foreign patent applications. The guide is available either by contacting the USPTO Contact Center at 800-786-9199, or it can be viewed on the USPTO website at http://www.uspto.gov/web/offices/pac/doc/general/index.html.

For information on preventing theft of your intellectual property (patents, trademarks and copyrights), you may wish to consult the U.S. Government website, http://www.stopfakes.gov. Part of a Department of Commerce initiative, this website includes self-help "toolkits" giving innovators guidance on how to protect intellectual property in specific countries such as China, Korea and Mexico. For questions regarding patent enforcement issues, applicants may call the U.S. Government hotline at 1-866-999-HALT (1-866-999-4158).

LICENSE FOR FOREIGN FILING UNDER

Title 35, United States Code, Section 184

Title 37, Code of Federal Regulations, 5.11 & 5.15

GRANTED

The applicant has been granted a license under 35 U.S.C. 184, if the phrase "IF REQUIRED, FOREIGN FILING LICENSE GRANTED" followed by a date appears on this form. Such licenses are issued in all applications where the conditions for issuance of a license have been met, regardless of whether or not a license may be required as

set forth in 37 CFR 5.15. The scope and limitations of this license are set forth in 37 CFR 5.15(a) unless an earlier license has been issued under 37 CFR 5.15(b). The license is subject to revocation upon written notification. The date indicated is the effective date of the license, unless an earlier license of similar scope has been granted under 37 CFR 5.13 or 5.14.

This license is to be retained by the licensee and may be used at any time on or after the effective date thereof unless it is revoked. This license is automatically transferred to any related applications(s) filed under 37 CFR 1.53(d). This license is not retroactive.

The grant of a license does not in any way lessen the responsibility of a licensee for the security of the subject matter as imposed by any Government contract or the provisions of existing laws relating to espionage and the national security or the export of technical data. Licensees should apprise themselves of current regulations especially with respect to certain countries, of other agencies, particularly the Office of Defense Trade Controls, Department of State (with respect to Arms, Munitions and Implements of War (22 CFR 121-128)); the Bureau of Industry and Security, Department of Commerce (15 CFR parts 730-774); the Office of Foreign AssetsControl, Department of Treasury (31 CFR Parts 500+) and the Department of Energy.

NOT GRANTED

No license under 35 U.S.C. 184 has been granted at this time, if the phrase "IF REQUIRED, FOREIGN FILING LICENSE GRANTED" DOES NOT appear on this form. Applicant may still petition for a license under 37 CFR 5.12, if a license is desired before the expiration of 6 months from the filing date of the application. If 6 months has lapsed from the filing date of this application and the licensee has not received any indication of a secrecy order under 35 U.S.C. 181, the licensee may foreign file the application pursuant to 37 CFR 5.15(b).

UNITED STATES PATENT AND TRADEMARK OFFICE

Commissioner for Patents
United States Patent and Trademark Office
P.O. Box 1450
Alexandria, VA 22313-1450
www.uspto.gov

US PATENT OPERATIONS/KLN
DEPT. 4300, M/S 27-4-A
AMGEN INC.
ONE AMGEN CENTER DRIVE
THOUSAND OAKS CA 91320-1799

COPY MAILED
DEC 0 8 2006
OFFICE OF PETITIONS

In re Application of	:
Sumedha Jayasena et al	:
Application No. 10/897,648	: DECISION GRANTING PETITION
Filed: July 22, 2004	: UNDER 37 CFR 1.137(b)
Attorney Docket No. A-835	:

This is a decision on the petition under 37 CFR 1.137(b), filed July 10, 2006, to revive the above-identified application.

The petition is **GRANTED**.

The petition satisfies the conditions for revival pursuant to the provisions of 37 CFR 1.137(b) in that (1) the reply in the form of an amendment; (2) the petition fee; and (3) the required statement of unintentional delay have been received. Accordingly, the reply to the Restriction Requirement of December 27, 2005, is accepted as having been unintentionally delayed.

Telephone inquiries concerning this decision should be directed to the undersigned at (571) 272-3208.

This matter is being referred to Technology Center AU1635.

Karen Creasy

Karen Creasy
Petitions Examiner
Office of Petitions

UNITED STATES PATENT AND TRADEMARK OFFICE

Commissioner for Patents
United States Patent and Trademark Office
P.O. Box 1450
Alexandria, VA 22313-1450
www.uspto.gov

U.S. PATENT OPERATIONS/KLN
DEPT. 4300, M/S 27-4-a
AMGEN INC.
ONE AMGEN CENTER DRIVE
THOUSAND OAKS CA 91320-1799

COPY MAILED

APR 18 2008

OFFICE OF PETITIONS

In re Application of	:
Sumedha Jayasena et al	:
Application No. 10/897,648	: DECISION GRANTING PETITION
Filed: July 22, 2004	: UNDER 37 CFR 1.137(b)
Attorney Docket No. A-835	:

This is a decision on the petition under 37 CFR 1.137(b), filed August 22, 2007, to revive the above-identified application.

The petition is **GRANTED**.

The petition satisfies the conditions for revival pursuant to the provisions of 37 CFR 1.137(b) in that (1) the reply in the form of an amendment; (2) the petition fee; and (3) the required statement of unintentional delay have been received. Accordingly, the reply to the Nonfinal Rejection mailed January 11, 2007, is accepted as having been unintentionally delayed.

Telephone inquiries concerning this decision should be directed to the undersigned at (571) 272-3208.

This matter is being referred to Technology Center AU 1635 to consider the reply received August 22, 2007.

Karen Creasy

Karen Creasy
Petitions Examiner
Office of Petitions

UNITED STATES PATENT AND TRADEMARK OFFICE

Commissioner for Patents
United States Patent and Trademark Office
P.O. Box 1450
Alexandria, VA 22313-1450
www.uspto.gov

MEDTRONIC, INC.
710 MEDTRONIC PARKWAY NE
MINNEAPOLIS, MN 55432-9924

COPY MAILED

MAR 0 6 2009

OFFICE OF PETITIONS

In re Application of :
Bret R. **SHOBERG** :
Application No. 10/897,662 :
Filed: July 22, 2004 :
Attorney Docket No. **P0007793.07** :

DECISION ON PETITION
UNDER 37 CFR 1.137(b)

This is a decision on the petition under the unintentional provisions of 37 CFR 1.137(b), filed September 10, 2008, to revive the above-identified application.

The petition is **DISMISSED**.

*Any request for reconsideration of this decision must be submitted within TWO (2) MONTHS from the mail date of this decision. Extensions of time under 37 CFR 1.136(a) are permitted. The reconsideration request should include a cover letter entitled "Renewed Petition under 37 CFR 1.137(b)." This is **not** a final agency action within the meaning of 5 U.S.C. § 704.*

The application became abandoned for failure to timely reply within the meaning of 37 CFR 1.113 to the final Office action, mailed November 20, 2007, which set a shortened statutory period for reply of three (3) months. A three (3) month extension of time under the provisions of 37 CFR 1.136(a) was obtained. Accordingly, the application became abandoned on May 21, 2008.

A grantable petition under 37 CFR 1.137(b) must be accompanied by: (1) the required reply, unless previously filed; (2) the petition fee as set forth in 37 CFR 1.17(m); (3) a statement that the entire delay in filing the required reply from the due date for the reply until the filing of a grantable petition pursuant to 37 CFR 1.137(b) was unintentional; and (4) any terminal disclaimer (and fee as set forth in 37 CFR 1.20(d)) required by 37 CFR 1.137(d). Where there is a question as to whether either the abandonment or the delay in filing a petition under 37 CFR 1.137 was unintentional, the Director may require additional information. See MPEP 711.03(c)(II)(C) and (D). The instant petition lacks item(1) the required reply.

Further correspondence with respect to this matter should be addressed as follows:

By Mail: Mail Stop PETITION
Commissioner for Patents
P. O. Box 1450
Alexandria, VA 22313-1450

By hand: U. S. Patent and Trademark Office
Customer Service Window, Mail Stop Petitions
Randolph Building
401 Dulany Street
Alexandria, VA 22314

The centralized facsimile number is **(571) 273-8300.**

Telephone inquiries concerning this decision should be directed to Monica A. Graves at (571) 272-7253.

Brian W. Brown
Petitions Examiner
Office of Petitions

UNITED STATES PATENT AND TRADEMARK OFFICE

Commissioner for Patents
United States Patent and Trademark Office
P.O. Box 1450
Alexandria, VA 22313-1450
www.uspto.gov

MEDTRONIC, INC.
710 MEDTRONIC PARKWAY NE
MINNEAPOLIS, MN 55432-9924

COPY MAILED

DEC 17 2009

OFFICE OF PETITIONS

In re Application of
Bret R. SHOBERG
Application No. 10/897,662
Filed: July 22, 2004
Attorney Docket No. **P0007793.07**

DECISION ON PETITION
UNDER 37 CFR 1.137(b)

This is a decision on the petition under the unintentional provisions of 37 CFR 1.137(b), filed June 4, 2009, to revive the above-identified application.

The petition is **GRANTED**.

The application became abandoned for failure to timely file a reply within the meaning of 37 CFR 1.113 to the final Office action of November 20, 2007. The proposed reply required for consideration of a petition to revive must be a Notice of Appeal (and appeal fee required by 37 CFR 41.20(b)(2), an amendment that *prima facie* places the application in condition for allowance, a Request for Continued Examination and submission (37 CFR 1.114), or the filing of a continuing application under 37 CFR 1.53(b). See MPEP 711.03(c)(III)(A)(2). A three (3) month extension of time pursuant to the provisions of 37 CFR 1.136(a) was obtained. Accordingly, the date of abandonment of this application is May 21, 2008.

The petition satisfies the requirements of 37 CFR 1.137(b) in that petitioner has supplied (1) the reply in the form of a Request for Continued Examination (RCE) and fee of $810, and the submission required by 37 CFR 1.114 with one (1) month extension of time; (2) the petition fee of $1540; and (3) an adequate statement of unintentional delay.

It is not apparent whether the person signing the statement of unintentional delay was in a position to have firsthand or direct knowledge of the facts and circumstances of the delay at issue. Nevertheless, such statement is being treated as having been made as the result of a reasonable inquiry into the facts and circumstances of such delay. See 37 CFR 10.18(b) and Changes to Patent Practice and Procedure; Final Rule Notice, 62 Fed. Reg. 53131, 53178 (October 10, 1997), 1203 Off. Gaz. Pat. Office 63, 103 (October 21, 1997). In the event that such an inquiry has not been made, petitioner

must make such an inquiry. If such inquiry results in the discovery that it is not correct that the entire delay in filing the required reply from the due date for the reply until the filing of a grantable petition pursuant to 37 CFR 1.137(b) was unintentional, petitioner must notify the Office.

There is no indication that the person signing the petition was ever given a power of attorney to prosecute the application. If the person signing the petition desires to receive future correspondence regarding this application, the appropriate power of attorney document must be submitted. While a courtesy copy of this decision is being mailed to the person signing the petition, all future correspondence will be directed to the address currently of record until appropriate instructions are received.

37 CFR 1.137(b)(3) requires a statement that "the entire delay in filing the required reply from the due date for the reply until the filing of a grantable petition pursuant to 37 CFR 1.137(b) was unintentional." Since the statement appearing in the petition varies from the language required by 37 CFR 1.137(b)(3), the statement is being construed as the required statement. Petitioner must notify the Office if this is **not** a correct reading of the statement appearing in the petition.

Telephone inquiries concerning this decision should be directed to Monica A. Graves at (571) 272-7253.

This application is being referred to Technology Center AU 3762 for processing of the RCE and for appropriate action by the Examiner in the normal course of business on the amendment previously submitted May 20, 2008 in accordance with 37 CFR 1.114.

Brian W. Brown
Petitions Examiner
Office of Petitions

cc: **MARK J. GEBHARDT**
MUETING RAASCH & GEBHARDT, P.A.
P.O. BOX 581336
MINNEAPOLIS, MN 55458-1336

UNITED STATES PATENT AND TRADEMARK OFFICE

Commissioner for Patents
United States Patent and Trademark Office
P.O. Box 1450
Alexandria, VA 22313-1450
www.uspto.gov

COPY MAILED
AUG 1 0 2006
OFFICE OF PETITIONS

Richard S. Haselhurst
1126, N.W. 16th Court
Fort Lauderdale, FL 33305

In re Application of Haselhurst et al. :
Application No. 10/897,694 : Decision on Petition
Filing Date: July 24, 2004 :
Docket No. Haselhurst/Christiansen :

This is a decision on the petition under 37 CFR 1.137(b), filed May 5, 2006, to revive the above-identified application.

The petition is **granted**.

The above-identified application became abandoned for failure to reply in a timely manner to the non-final Office action mailed June 14, 2005, which set a shortened statutory period for reply of three (3) months. A two-month extension of time was obtained. Accordingly, the application became abandoned on September 15, 2005. A Notice of Abandonment was mailed on February 9, 2006.

The instant petition requests revival of the application.

Petitioner has met the requirements to revive the above-identified application pursuant to 37 CFR 1.137(b). Therefore, the petition is granted and the application is revived.

There is no indication that the person signing the instant petition was ever given a power of attorney or authorization of agent to prosecute the above-identified application. If the person signing the instant petition desires to receive future correspondence regarding this application, the appropriate power of attorney or authorization of agent must be submitted. While a courtesy copy of this decision is being mailed to the person signing the instant petition, all future correspondence will be directed solely to the address currently of record until such time as appropriate instructions are received to the contrary.

The petition is signed by Kean DeCarlo. Since DeCarlo was not an attorney or agent of record at the time the application became abandoned, it appears DeCarlo may not be in a position to have firsthand or direct knowledge of the facts and circumstances of the delay. Nevertheless, the statement by DeCarlo that the entire delay was unintentional is being treated as having been made as the result of a reasonable inquiry into the facts and circumstances of such delay.[1] In the

[1] See Changes to Patent Practice and Procedure, 62 *Fed. Reg.* at 53160 and 53178; 1203 *Off. Gaz. Pat. Office* at 88 and 103 (responses to comments 64 and 109) (applicant obligated under 37 CFR 10.18 to inquire into the underlying facts and circumstances when providing the statement required by 37 CFR 1.137(b) to the Patent and Trademark Office).

event that such an inquiry has not been made, petitioner must make such an inquiry. If such inquiry results in the discovery that a portion of the delay from the due date for the reply until the filing of a grantable petition pursuant to 37 CFR 1.137(b) was unintentional, petitioner must notify the Office.

Technology Center Art Unit 2855 will be informed of the instant decision and the application will be further examined in due course.

Telephone inquiries regarding this communication should be directed to Petitions Attorney Steven Brantley at (571) 272-3203.

Charles Steven Brantley
Senior Petitions Attorney
Office of Petitions

cc: Needle & Rosenberg, P.C.
Suite 1000
999 Peachtree Street
Atlanta, GA 30309-3915

UNITED STATES PATENT AND TRADEMARK OFFICE

Commissioner for Patents
United States Patent and Trademark Office
P.O. Box 1450
Alexandria, VA 22313-1450
www.uspto.gov

CHARLES G. CALL
68 HORSE POND ROAD
WEST YARMOUTH, MA 02673-2516

COPY MAILED
NOV 27 2006
OFFICE OF PETITIONS

In re Application of

Schmandt, et al.

Application No. 10/897,709

Filed: July 24, 2004

Attorney Docket No. D-32

DECISION ON PETITION

This is a decision on the petition under 37 CFR 1.137(b), filed September 22, 2006, to revive the above-identified application.

The petition is **GRANTED**.

The above-cited application became abandoned for failure to respond to the final Office action mailed March 7, 2006, which set a shortened statutory period for reply of three months from its mailing date. A response was not received within the allowable period and the application became abandoned on June 8, 2006.

The Request for Continued Examination, filed September 22, 2006, is noted and made of record.

The application is being forwarded to Technology Center 2600, GAU 2614 for further processing.

Telephone inquiries concerning this decision should be directed to the undersigned at (571) 272-3222.

Kenya A. McLaughlin
Petitions Attorney
Office of Petitions

UNITED STATES PATENT AND TRADEMARK OFFICE

Commissioner for Patents
United States Patent and Trademark Office
P.O. Box 1450
Alexandria, VA 22313-1450
www.uspto.gov

CHARLES G CALL
20 EAST GOETHE STREET
CH1
CHICAGO IL 60610-2368

COPY MAILED

OCT 1 0 2008

OFFICE OF PETITIONS

In re Application of	:	
Schmandt, et al.	:	
Application No. 10/897,709	:	ON PETITION
Filed: July 24, 2004	:	
Attorney Docket No. D-32	:	

This is a decision on the petition under 37 CFR 1.137(b), filed August 25, 2008, to revive the above-identified application.

The petition under 37 CFR 1.137(b) is **GRANTED**.

The above-identified application became abandoned for failure to timely file a response to the non-final Office action mailed June 4, 2007. This Office action set a shortened statutory period for reply of three (3) months. Applicants filed a reply, together with a three month extension of time, on December 5, 2007. However, the last day such a reply could have been filed would have been December 4, 2007. As such, the application became abandoned on December 5, 2007. A Notice of Abandonment was mailed on December 10, 2007.

With the instant petition, applicants paid the petition fee and made the proper statement of unintentional delay. The required reply in the form of an Amendment was previously filed on December 5, 2007.

The matter is being forwarded to Group Art Unit 2614 for consideration of the Amendment filed December 5, 2007.

Telephone inquiries concerning this decision should be directed to the undersigned at (571)272-3207.

Cliff Congo
Petitions Attorney
Office of Petitions

UNITED STATES PATENT AND TRADEMARK OFFICE

Commissioner for Patents
United States Patent and Trademark Office
P.O. Box 1450
Alexandria, VA 22313-1450
www.uspto.gov

MAILED

OCT 01 2009

OFFICE OF PETITIONS

CHARLES G CALL
20 EAST GOETHE STREET
CH1
CHICAGO IL 60610-2368

In re Application of	:	
Schmandt, et al.	:	
Application No. 10/897,709	:	ON PETITION
Filed: July 24, 2004	:	
Attorney Docket No. D-32	:	

This is a decision on the petition under 37 CFR 1.137(b), filed August 13, 2009, to revive the above-identified application.

The petition under 37 CFR 1.137(b) is **GRANTED**.

The above-identified application became abandoned for failure to timely file a response to the non-final Office action mailed November 10, 2008. This Office action set a shortened statutory period for reply of three (3) months. No reply having been received, the application became abandoned on February 11, 2009. The Office mailed a Notice of Abandonment on June 17, 2009.

With the instant petition, applicants paid the petition fee, made the proper statement of unintentional delay, and submitted the required reply in the form of an Amendment.

The matter is being forwarded to Group Art Unit 2614 for consideration of the Amendment filed August 13, 2009.

Telephone inquiries concerning this decision should be directed to the undersigned at (571)272-3207.

Cliff Congo
Petitions Attorney
Office of Petitions

UNITED STATES PATENT AND TRADEMARK OFFICE

Commissioner for Patents
United States Patent and Trademark Office
P.O. Box 1450
Alexandria, VA 22313-1450
www.uspto.gov

Charles G. Call
361 Wild Coffee Lane
Marco Island FL 34145

MAILED

APR 23 2010

OFFICE OF PETITIONS

In re Application of	:	
Christopher Schmandt, et al.	:	
Application No. 10/897,709	:	DECISION ON PETITION
Filed: July 24, 2004	:	
Attorney Docket No. D-32	:	

This is a decision on the petition under the unintentional provisions of 37 CFR 1.137(b), filed February 3, 2010, to revive the above-identified application.

The petition is **GRANTED**.

This application became abandoned for failure to timely pay the issue and publication fees on or before January 8, 2010, as required by the Notice of Allowance and Fee(s) Due, mailed October 8, 2009. Accordingly, the date of abandonment of this application is January 9, 2010.

The petition satisfies the requirements of 37 CFR 1.137(b) in that petitioner has supplied (1) the reply in the form of payment of the issue fee of $1,510 and the publication fee of $300, (2) the petition fee of $1.620; and (3) a proper statement of unintentional delay.

It is not apparent whether the person signing the statement of unintentional delay was in a position to have firsthand or direct knowledge of the facts and circumstances of the delay at issue. Nevertheless, such statement is being treated as having been made as the result of a reasonable inquiry into the facts and circumstances of such delay. See 37 CFR 10.18(b) and Changes to Patent Practice and Procedure; Final Rule Notice, 62 Fed. Reg. 53131, 53178 (October 10, 1997), 1203 Off. Gaz. Pat. Office 63, 103 (October 21, 1997). In the event that such an inquiry has not been made, petitioner must make such an inquiry. If such inquiry results in the discovery that it is not correct that the entire delay in filing the required reply from the due date for the reply until the filing of a grantable petition pursuant to 37 CFR 1.137(b) was unintentional, petitioner must notify the Office.

Telephone inquiries concerning this decision should be directed to Terri Johnson at (571) 272-2991.

This application is being referred to Office of Data Management for processing into a patent.

Terri Johnson
Petitions Examiner
Office of Petitions

SPE RESPONSE FOR CERTIFICATE OF CORRECTION

Paper No.: _____

DATE : 2-20-08

TO SPE OF : ART UNIT 3782

SUBJECT : Request for Certificate of Correction for Appl. No.: 10/849772 Patent No.: 7371008

Please respond to this request for a certificate of correction within 7 days.

Please review the requested changes/corrections as shown in the **COCIN** document(s) in the IFW application image. No new matter should be introduced, nor should the scope or meaning of the claims be changed.

should claims be approved

Please complete the response (see below) and forward the completed response to scanning using document code **COCX**.

Evans Young

Certificates of Correction Branch

703-308-9390 ext. 117

Thank You For Your Assistance

The request for issuing the above-identified correction(s) is hereby:

Note your decision on the appropriate box.

- ☐ **Approved** — **All** changes apply.
- ☒ **Approved in Part** — Specify below which changes **do not** apply.
- ☐ **Denied** — State the reasons for denial below.

Comments:

The ONLY change that has been approved is:
In column 6, line 52 please change "food stuff" to --foodstuff--.

/Nathan J. Newhouse/ — **SPE**

3782 — **Art Unit**

UNITED STATES PATENT AND TRADEMARK OFFICE

Commissioner for Patents
United States Patent and Trademark Office
P.O. Box 1450
Alexandria, VA 22313-1450
www.uspto.gov

COPY MAILED

NOV 2 1 2008

OFFICE OF PETITIONS

BANNER DEVELOPMENT, INC.
P.O. BOX 8859
ENDWELL NY 13762

In re Application of

Terry L. Dellinger

Application No. 10/897,718

Filed: July 23, 2004

Attorney Docket No. TD-102

DECISION ON PETITION

This is a decision on the petition under 37 CFR 1.173(b) filed October 20, 2008, which will be treated as petition under 37 CFR 1.181(a) to withdraw the holding of abandonment.

The petition under 37 CFR 1.181(a) to withdraw the holding of abandonment is **granted**.

This application was held abandoned on June 18, 2008, after it was believed that no response was received to the non-final Office action mailed March 17, 2008. A Notice of Abandonment was mailed on October 1, 2008.

The instant petition maintains that a response was timely filed on August 14, 2008, with a request for an extension of time within the second month. A review of the application file history reveals that petitioner has repeatedly cited an incorrect application serial number for this application and that the response to the non-final Office action was placed in the Image File Wrapper for application 10/879,718 and the fee for the extension of time was also credited to that application. An Office date-stamped postcard whereby the Office acknowledged receipt of the response on August 18, 2008, accompanied the petition and the response cited other identifiers by which the response could have been properly matched to the subject application. The evidence is convincing that the response to the non-final Office action was timely received, albeit having been routed to the incorrect application. Because a response was filed with the Office prior to the expiration of the period for reply, the petition is granted and the holding of abandonment withdrawn.

The application file is being forwarded Technology Center 3600, GAU 3632, for further processing.

Questions regarding this decision may be directed to the undersigned at (571) 272-3222.

Kenya A. McLaughlin
Petitions Attorney
Office of Petitions

UNITED STATES PATENT AND TRADEMARK OFFICE

Commissioner for Patents
United States Patent and Trademark Office
P.O. Box 1450
Alexandria, VA 22313-1450
www.uspto.gov

MUSERLIAN LUCAS AND MERCANTI LLP
475 PARK AVE SOUTH
15TH FLOOR
NEW YORK NY 10016

COPY MAILED

MAY 2 0 2005

OFFICE OF PETITIONS

In re Application of	:	
Noriyuki Yanagimachi	:	
Application No. 10/897,725	:	DECISION ON PETITION
Filed: July 23, 2004	:	
Attorney Docket No. KON-1910	:	

This is a decision on the petition under 37 CFR 1.53(e)(2), filed September 27, 2004, which is being treated as a request that the "Notice of Omitted Item(s) in a Nonprovisional Application" mailed September 14, 2004 be withdrawn.

The petition is **DISMISSED**.

The application was filed on July 23, 2004. However, on September 14, 2004, the Initial Patent Examination Division mailed a "Notice of Omitted Item(s) in a Nonprovional Application". The Notice informed applicant that the application had been accorded a filing date. However, Figures 11b as described in the specification appeared to have been omitted.

In response, the present petition was filed. Petitioner explains that Figure 11b was not missing on July 23, 2004. Instead, the application included a sheet of drawings containing two figures labeled "Fig. 11(a)".

It is obvious from the petition that no drawings were actually missing on July 23, 2004. Rather, the drawing sheet containing Figure 11 was simply mislabeled as a result of applicant's filing error. However, the "Notice of Omitted Item(s) in a Nonprovisional Application" mailed September 14, 2004 was correct in stating that Figure 11b described in the specification appeared to have been omitted. Therefore, the "Notice" was properly mailed and will not be withdrawn.

Since the present petition was not necessitated by any error on the part of the Office, the $130 petition fee will not be refunded.

The application is being returned to the Office of Initial Patent Examination for processing with a filing date of July 23, 2004, using the 6 sheets of drawings filed on that date and the 1 sheet of corrected drawings filed on September 27, 2004 to correct the error in labeling of Figure 11(a) and 11(b).

Telephone inquiries concerning this decision may be directed to the undersigned at 571-272-3207.

Cliff Congo
Petitions Attorney
Office of Petitions

UNITED STATES PATENT AND TRADEMARK OFFICE

Commissioner for Patents
United States Patent and Trademark Office
P.O. Box 1450
Alexandria, VA 22313-1450
www.uspto.gov

APPLICATION NUMBER	FILING/RECEIPT DATE	FIRST NAMED APPLICANT	ATTORNEY DOCKET NUMBER
10/897,725	07/23/2004	Noriyuki Yanagimachi	KON-1910

LUCAS & MERCANTI, LLP
475 PARK AVENUE SOUTH
15TH FLOOR
NEW YORK NY 10016

DATE MAILED: December 1, 2006

DECISION DISMISSING PETITION UNDER 37 CFR 1.138(d)
The declaration of express abandonment will not be recognized

This is in response to the petition under 37 CFR 1.138(d) filed on November 15, 2006, requesting for a refund of any previously paid search fee and excess claims fee in the above-identified application.

The petition is dismissed.

The express abandonment will **not** be recognized for the reason(s) indicated below:

- ☐ The petition was not filed in sufficient time to permit the appropriate officials to recognize the abandonment before an examination has been made of the application. See 37 CFR 1.138(d).
- ☑ The application is not an application filed under 35 U.S.C. 111(a) on or after December 8, 2004.
- ☐ The petition was not signed by a party authorized by 37 CFR 1.33(b)(1), (3) or (4).

Any inquiries concerning this decision should be directed to the Pre-Grant Publication Division at (703) 605-4283.

Barbara J. Debnam
Pre-Grant Publication Division

UNITED STATES PATENT AND TRADEMARK OFFICE

Commissioner for Patents
United States Patent and Trademark Office
P.O. Box 1450
Alexandria, VA 22313-1450
www.uspto.gov

QUALCOMM INCORPORATED
5775 MOREHOUSE DR.
SAN DIEGO CA 92121

COPY MAILED

NOV 19 2007

OFFICE OF PETITIONS

In re Application of	:
Ananthapadmanabhan et al	:
Application No. 10/897,746	: DECISION GRANTING PETITION
Filed: July 22, 2004	: UNDER 37 CFR 1.137(b)
Attorney Docket No. 000275C1	:

This is a decision on the petition under 37 CFR 1.137(b), filed May 19, 2007, to revive the above-identified application.

The petition is **GRANTED**.

The petition satisfies the conditions for revival pursuant to the provisions of 37 CFR 1.137(b) in that (1) the reply in the form of the issue, publication fee, RCE/amendment/IDS; (2) the petition fee; and (3) the required statement of unintentional delay have been received. Accordingly, the reply to the Notice of Allowance of January 30, 2007, is accepted as having been unintentionally delayed.

Telephone inquiries concerning this decision should be directed to the undersigned at (571) 272-3208.

This matter is being referred to Technology Center AU 2626 to consider the RCE/IDS/Amendment filed May 19, 2007.

Karen Creasy

Karen Creasy
Petitions Examiner
Office of Petitions

UNITED STATES PATENT AND TRADEMARK OFFICE

UNITED STATES DEPARTMENT OF COMMERCE
United States Patent and Trademark Office
Address: COMMISSIONER FOR PATENTS
P.O. Box 1450
Alexandria, Virginia 22313-1450
www.uspto.gov

BARCELO & HARRISON, LLP
2901 West Coast Hwy
Suite 200
Newport Beach, CA 92663

Mail Date: 05/10/2010

Applicant	: Michael Lindahl	: DECISION ON REQUEST FOR
Patent Number	: 7653899	: RECALCULATION of PATENT
Issue Date	: 01/26/2010	: TERM ADJUSTMENT IN VIEW
Application No	: 10/897,752	: OF WYETH AND NOTICE OF INTENT TO
Filed	: 07/23/2004	: ISSUE CERTIFICATE OF CORRECTION
		:

The Request for Recalculation is **GRANTED** to the extent indicated.

The patent term adjustment has been determined to be **1144** days. The USPTO will *sua sponte* issue a certificate of correction reflecting the amount of PTA days determined by the recalculation.

Prior to the issuance of the certificate of correction, the USPTO will afford patentee an opportunity to be heard and request reconsideration. Accordingly, patentee has **one month or thirty (30) days**, whichever is longer, to file a request for reconsideration of this patent term adjustment calculation. See 35 U.S.C. 154(b)(3)(B)(ii) and 37 CFR 1.322(a)(4). No extensions of time will be granted under 37 CFR 1.136.

Patentee should use document code PET.OP if electronically filing a request for reconsideration of this patent term adjustment calculation. The patentee must also include the information required by 37 CFR 1.705(b)(2) and the fee required by 37 CFR 1.18(e). If patentee does not file a timely request for reconsideration of this patent term adjustment calculation including the information required by 37 CFR 1.705(b)(2) and the fee required by 37 CFR 1.18(e), the USPTO will issue a certificate of correction reflecting the PTA determination noted above.

Patentee should be aware that in order to preserve the right to review in the United States District Court for the District of Columbia of the USPTO patent term adjustment determination, patentee must ensure that he or she also take the steps required under 35 U.S.C. 154(b)(4)(A) in a timely manner. Nothing in the request for recalculation should be construed as providing an alternative time frame for commencing a civil action under 35 U.S.C. 154(b)(4)(A).

Any questions concerning this decision should be directed to the Office of Patent Legal Administration at 571-272-7702.

UNITED STATES PATENT AND TRADEMARK OFFICE

UNITED STATES DEPARTMENT OF COMMERCE
United States Patent and Trademark Office
Address: COMMISSIONER FOR PATENTS
P.O. Box 1450
Alexandria, Virginia 22313-1450
www.uspto.gov

BORSON LAW GROUP, PC
1078 CAROL LANE, #200
LAFAYETTE, CA 94549

Mail Date: 04/21/2010

Applicant	: Paul V. Lehmann	: DECISION ON REQUEST FOR
Patent Number	: 7598093	: RECALCULATION of PATENT
Issue Date	: 10/06/2009	: TERM ADJUSTMENT IN VIEW
Appliction No	: 10/897,767	: OF WYETH AND NOTICE OF INTENT TO
Filed	: 07/22/2004	: ISSUE CERTIFICATE OF CORRECTION
		:

The Request for Recalculation is **GRANTED** to the extent indicated.

The patent term adjustment has been determined to be **929** days. The USPTO will *sua sponte* issue a certificate of correction reflecting the amount of PTA days determined by the recalculation.

Prior to the issuance of the certificate of correction, the USPTO will afford patentee an opportunity to be heard and request reconsideration. Accordingly, patentee has **one month or thirty (30) days**, whichever is longer, to file a request for reconsideration of this patent term adjustment calculation. See 35 U.S.C. 154(b)(3)(B)(ii) and 37 CFR 1.322(a)(4). No extensions of time will be granted under 37 CFR 1.136.

Patentee should use document code PET.OP if electronically filing a request for reconsideration of this patent term adjustment calculation. The patentee must also include the information required by 37 CFR 1.705(b)(2) and the fee required by 37 CFR 1.18(e). If patentee does not file a timely request for reconsideration of this patent term adjustment calculation including the information required by 37 CFR 1.705(b)(2) and the fee required by 37 CFR 1.18(e), the USPTO will issue a certificate of correction reflecting the PTA determination noted above.

Patentee should be aware that in order to preserve the right to review in the United States District Court for the District of Columbia of the USPTO patent term adjustment determination, patentee must ensure that he or she also take the steps required under 35 U.S.C. 154(b)(4)(A) in a timely manner. Nothing in the request for recalculation should be construed as providing an alternative time frame for commencing a civil action under 35 U.S.C. 154(b)(4)(A).

Any questions concerning this decision should be directed to the Office of Patent Legal Administration at 571-272-7702.

UNITED STATES PATENT AND TRADEMARK OFFICE

UNITED STATES DEPARTMENT OF COMMERCE
United States Patent and Trademark Office
Address: COMMISSIONER FOR PATENTS
P.O. Box 1450
Alexandria, Virginia 22313-1450
www.uspto.gov

BORSON LAW GROUP, PC
1078 CAROL LANE, #200
LAFAYETTE, CA 94549

Mail Date: 05/18/2010

Applicant : Paul V. Lehmann
Patent Number : 7598093
Issue Date : 10/06/2009
Application No : 10/897,767
Filed : 07/22/2004

: NOTICE CONCERNING IMPROPER
: CALCULATION OF PATENT TERM
: ADJUSTMENT BASED UPON USPTO
: IMPROPERLY MEASURING REDUCTION
: PERIOD UNDER 37 CFR 1.704(c)(10).

The United States Patent and Trademark Office (USPTO) discovered that in processing the recent recalculation decisions mailed in response to patentee's filed Request for Recalculation of Patent Term Adjustment in view of Wyeth, the USPTO improperly measured the reduction period for reductions under 37 CFR 1.704(c)(10). Pursuant to 37 CFR 1.704(c)(10), patentee's reduction begins on the date of filing the amendment under 37 CFR 1.312 ("1.312 amendment") or other related paper and ends on the date that the Office mails a response to the filing of the 1.312 amendment or other paper. It has been discovered that during the recalculation, the calculation failed to the limit the reduction to the mail date of the response to the 1.312 amendment or other paper. Accordingly, patentee's reductions were greater than warranted.

This notice **VACATES** the previous GRANTED request for recalculation and provides patentee with a revised GRANTED recalculation.

The patent term adjustment has been determined to be **1013** days. The USPTO will *sua sponte* issue a certificate of correction reflecting the amount of patent term adjustment (PTA) days determined by the recalculation.

Prior to the issuance of the certificate of correction, the USPTO will afford patentee an opportunity to be heard and request reconsideration. Accordingly, patentee has **one month or thirty (30) days** from the mail date of this notice, whichever is longer, to file a request for reconsideration of this PTA calculation. See 35 U.S.C. § 154(b)(3)(B)(ii) and 37 CFR 1.322(a)(4).

Patentee should use document code PET.OP if electronically filing a request for reconsideration of this PTA calculation. The patentee must also include the information required by 37 CFR 1.705(b)(2), and the fee required by 37 CFR 1.18(e). If patentee does not file a timely request for reconsideration of this PTA calculation, including the information required by 37 CFR 1.705(b)(2) and the fee required by 37 CFR 1.18(e), the USPTO will issue a certificate of correction reflecting the PTA determination noted above.

Patentee should be aware that in order to preserve the right of review of the USPTO's PTA determination in the United States District Court for the District of Columbia, patentee must ensure that the steps required under 35 U.S.C. § 154 (b)(4) are taken in a timely manner. Nothing in the request for recalculation should be construed as providing an alternative time frame for commencing a civil action under 35 U.S.C. § 154(b)(4).

UNITED STATES PATENT AND TRADEMARK OFFICE

UNITED STATES DEPARTMENT OF COMMERCE
United States Patent and Trademark Office
Address: COMMISSIONER FOR PATENTS
P.O. Box 1450
Alexandria, Virginia 22313-1450
www.uspto.gov

POWER SYSTEMS MANUFACTURING
1440 WEST INDIANTOWN ROAD
SUITE 200
JUPITER, FL 33458

Mail Date: 04/21/2010

Applicant	: Peter Stuttaford	: DECISION ON REQUEST FOR
Patent Number	: 7624564	: RECALCULATION of PATENT
Issue Date	: 12/01/2009	: TERM ADJUSTMENT IN VIEW
Appliction No	: 10/897,785	: OF WYETH AND NOTICE OF INTENT TO
Filed	: 07/23/2004	: ISSUE CERTIFICATE OF CORRECTION
		:

The Request for Recalculation is **GRANTED** to the extent indicated.

The patent term adjustment has been determined to be **1530** days. The USPTO will *sua sponte* issue a certificate of correction reflecting the amount of PTA days determined by the recalculation.

Prior to the issuance of the certificate of correction, the USPTO will afford patentee an opportunity to be heard and request reconsideration. Accordingly, patentee has **one month or thirty (30) days**, whichever is longer, to file a request for reconsideration of this patent term adjustment calculation. See 35 U.S.C. 154(b)(3)(B)(ii) and 37 CFR 1.322(a)(4). No extensions of time will be granted under 37 CFR 1.136.

Patentee should use document code PET.OP if electronically filing a request for reconsideration of this patent term adjustment calculation. The patentee must also include the information required by 37 CFR 1.705(b)(2) and the fee required by 37 CFR 1.18(e). If patentee does not file a timely request for reconsideration of this patent term adjustment calculation including the information required by 37 CFR 1.705(b)(2) and the fee required by 37 CFR 1.18(e), the USPTO will issue a certificate of correction reflecting the PTA determination noted above.

Patentee should be aware that in order to preserve the right to review in the United States District Court for the District of Columbia of the USPTO patent term adjustment determination, patentee must ensure that he or she also take the steps required under 35 U.S.C. 154(b)(4)(A) in a timely manner. Nothing in the request for recalculation should be construed as providing an alternative time frame for commencing a civil action under 35 U.S.C. 154(b)(4)(A).

Any questions concerning this decision should be directed to the Office of Patent Legal Administration at 571-272-7702.

UNITED STATES PATENT AND TRADEMARK OFFICE

Commissioner for Patents
United States Patent and Trademark Office
P.O. Box 1450
Alexandria, VA 22313-1450
www.uspto.gov

GREENBERG TRAURIG, LLP
SUITE 400E
2450 COLORADO AVENUE
SANTA MONICA, CA 90404

COPY MAILED

JAN 12 2005

OFFICE OF PETITIONS

In re Application of :
Benik Hovsepian :
Application No. 10/897,789 :
Filed: July 23, 2004 : ON PETITION
Attorney Docket No. 70028-010600 :

This is a decision on the Petition for Filing Date, filed October 22, 2004, requesting the above-identified application be accorded a filing date of July 23, 2004, including 8 pages of drawings.

The application was filed on July 23, 2004. On October 7, 2004, the Office of Initial Patent Examination mailed a Notice of Incomplete Nonprovisional Application (hereinafter "Notice") stating that the application had not been accorded a filing date because the application had been deposited without drawings.

Applicant responds with the instant petition wherein Applicant avers that 8 pages of drawings were originally filed with the application on July 23, 2004, and were received by this Office as evidenced by the return-receipt postcard. In support of this assertion, Applicant provides a copy of a return-receipt postcard acknowledging receipt of, inter alia, 8 pages of drawings in the above-identified application by this Office on July 23, 2004.

A review of the return-receipt postcard reveals that Applicant is correct. The postcard acknowledges receipt of, *inter alia*, 8 pages of drawings in the above-identified application by this Office on July 23, 2004.

"A postcard receipt which itemizes and properly identifies the papers which are being filed serves as prima facie evidence of receipt in the PTO of all items listed thereon by the PTO." MPEP § 503.

Accordingly, the petition is granted.

The copy of 8 pages of drawings, filed with the instant petition on October 22, 2004, will be used for examination purposes.

A refund of the petition fee has been credited to deposit account 50-2638, as requested in the instant petition.

The application will be returned to the Office of Initial Patent Examination for further processing with a filing date of July 23, 2004, and an indication that 8 pages of drawings were present on filing, using the 8 pages of drawings filed with the instant petition on October 22, 2004.

Telephone inquiries concerning this matter should be directed to the undersigned at (571) 272-3232.

Derek L. Woods
Attorney/Advisor
Office of Petitions

Pet. Dec.

Practitioner's Docket No. HD77/01

PATENT

IN THE UNITED STATES PATENT AND TRADEMARK OFFICE

In re: Application of: DANIEL D. HAGON

SN 10/897791

Application No.: Group No.

PETITION GRANTED

Filed: Herewith Examiner:

For: DRAIN TRAP CLEAN-OUT SYSTEM

Richard Crispino
Special Program Examiner
TC 1700
11/19/04

Commissioner for Patents
Alexandria, VA 22313-1450

ATTENTION: Group Director, Group _____ (M.P.E.P. § 1002.02(c))

PETITION TO MAKE SPECIAL BECAUSE OF APPLICANT'S AGE
(37 C.F.R. § 1.102(c) AND M.P.E.P. § 708.02 IV)

NOTE: See M.P.E.P. § 708.02, 7th ed.

Applicant hereby petitions to make this application special because applicant is over 65 years of age.

As a showing of this fact, accompanying this petition is:

(check one of the following)

- ■ applicant's birth certificate
- □ a declaration by the applicant that he/she is over 65 years of age.

No fee is required with this petition, in accordance with 37 C.F.R. § 1.102(c).

SIGNATURE OF PRACTITIONER

Reg. No.: 46,676

Tel. No. (727) 734-2855

Edward P. Dutkiewicz
640 Douglas Avenue
Dunedin, Florida 34698

UNITED STATES PATENT AND TRADEMARK OFFICE

UNITED STATES DEPARTMENT OF COMMERCE
United States Patent and Trademark Office
Address: COMMISSIONER FOR PATENTS
P.O. Box 1450
Alexandria, Virginia 22313-1450
www.uspto.gov

MINTZ, LEVIN, COHN, FERRIS, GLOVSKY & POPEO, P.C.
ONE FINANCIAL CENTER
BOSTON, MA 02111

Mail Date: 04/21/2010

Applicant	: Yuh-Cherng Wu	: DECISION ON REQUEST FOR
Patent Number	: 7577649	: RECALCULATION of PATENT
Issue Date	: 08/18/2009	: TERM ADJUSTMENT IN VIEW
Appliction No	: 10/897,827	: OF WYETH AND NOTICE OF INTENT TO
Filed	: 07/23/2004	: ISSUE CERTIFICATE OF CORRECTION
		:

The Request for Recalculation is **GRANTED** to the extent indicated.

The patent term adjustment has been determined to be **824** days. The USPTO will *sua sponte* issue a certificate of correction reflecting the amount of PTA days determined by the recalculation.

Prior to the issuance of the certificate of correction, the USPTO will afford patentee an opportunity to be heard and request reconsideration. Accordingly, patentee has **one month or thirty (30) days**, whichever is longer, to file a request for reconsideration of this patent term adjustment calculation. See 35 U.S.C. 154(b)(3)(B)(ii) and 37 CFR 1.322(a)(4). No extensions of time will be granted under 37 CFR 1.136.

Patentee should use document code PET.OP if electronically filing a request for reconsideration of this patent term adjustment calculation. The patentee must also include the information required by 37 CFR 1.705(b)(2) and the fee required by 37 CFR 1.18(e). If patentee does not file a timely request for reconsideration of this patent term adjustment calculation including the information required by 37 CFR 1.705(b)(2) and the fee required by 37 CFR 1.18(e), the USPTO will issue a certificate of correction reflecting the PTA determination noted above.

Patentee should be aware that in order to preserve the right to review in the United States District Court for the District of Columbia of the USPTO patent term adjustment determination, patentee must ensure that he or she also take the steps required under 35 U.S.C. 154(b)(4)(A) in a timely manner. Nothing in the request for recalculation should be construed as providing an alternative time frame for commencing a civil action under 35 U.S.C. 154(b)(4)(A).

Any questions concerning this decision should be directed to the Office of Patent Legal Administration at 571-272-7702.

UNITED STATES PATENT AND TRADEMARK OFFICE

Commissioner for Patents
United States Patent and Trademark Office
P.O. Box 1450
Alexandria, VA 22313-1450
www.uspto.gov

MINTZ, LEVIN, COHN, FERRIS, GLOVSKY & POPEO, P.C.
ONE FINANCIAL CENTER
BOSTON, MA 02111

COPY MAILED
NOV 24 2008

In re Application of	:	
Yuh-Cherng Wu	:	
Application No.: 10/897,829	:	ON PETITION
Filed: July 23, 2004	:	
Attorney Docket No.: 34874-351/2004P00283US	:	

This is a decision on the petition, filed November 21, 2008, under 37 CFR 1.313(c)(2) to withdraw the above-identified application from issue after payment of the issue fee.

The petition is **GRANTED**.

The above-identified application is withdrawn from issue for consideration of a submission under 37 CFR 1.114 (request for continued examination). See 37 CFR 1.313(c)(2).

Petitioner is advised that the issue fee paid on October 29, 2008, cannot be refunded. If, however, this application is again allowed, petitioner may request that it be applied towards the issue fee required by the new Notice of Allowance.[1]

The file does not indicate a change of address has been submitted, although the address given on the petition differs from the address of record. If appropriate, a change of address should be filed in accordance with MPEP 601.03. A courtesy copy of this decision is being mailed to the address given on the petition; however, the Office will mail all future correspondence solely to the address of record.

Telephone inquiries relating to this decision should be directed to the undersigned at (571) 272-3204.

[1] *The request to apply the issue fee to the new Notice may be satisfied by completing and returning the new Part B - Fee(s) Transmittal Form (along with any balance due at the time of submission). Petitioner is advised that the Issue Fee Transmittal Form* ***must*** *be completed and timely submitted to avoid abandonment of the application.*

The application is being referred to Technology Center AU 2174 for further processing of the request for continued examination under 37 CFR 1.114 and for consideration of the concurrently filed Information Disclosure Statement (IDS).

/SDB/

Sherry D. Brinkley
Petitions Examiner
Office of Petitions

cc: CARL A. KUKKONEN, III
MINTZ, LEVIN, COHN, FERRIS, GLOVSKY
AND POPEO, P.C.
3580 CARMEL MOUNTAIN ROAD, SUITE 300
SAN DIEGO, CA 92130

UNITED STATES PATENT AND TRADEMARK OFFICE

Commissioner for Patents
United States Patent and Trademark Office
P.O. Box 1450
Alexandria, VA 22313-1450
www.uspto.gov

MEDTRONIC
Attn: Noreen Johnson - IP Legal Department
2600 Sofamor Danek Drive
MEMPHIS TN 38132

4/24/09

In re Application of:
PETERMAN, MARC
Serial No.: 10/897,837
Filed: Jul. 23, 2004
Docket: MSDI-231/PC1039.00
Title: EXPANDABLE SPINAL IMPLANT HAVING INTERLOCKING GEOMETRY FOR STRUCTURAL SUPPORT

DECISION ON PETITION TO REVIEW RESTRICTION REQUIREMENT UNDER 37 CFR 1.144

This is a decision on the petition filed February 18, 2009 to review the withdrawal of claims 2-9, 12-26, 34-35 and 48-49 from consideration made in the February 4, 2009 Office action. The petition is being considered pursuant to 37 CFR 1.181 and CFR 1.144 and no fee is required for the petition.

The petition is **GRANTED**.

In the February 18, 2009 petition, petitioner requests the examiner to reconsider the withdrawal of claims 2-9, 12-26, 34-35 and 48-49 from consideration made in the February 4, 2009 Office action. The petitioner contends that these claims do read on the elected species as set forth in the species election requirements of the October 10, 2008.

After consulting with the examiner, it was agreed that claims 2-9, 12-26, 34-35 and 48-49 should be rejoined. The election of species requirement should be modified as requested. An Office action on the merits including the rejoined claims will follow in due course. Therefore, the request to review the withdrawal of claims 2-9, 12-26, 34-35 and 48-49 is hereby granted.

The application is being forwarded to the examiner via his Supervisory Patent Examiner for further processing. Any inquiry regarding this decision should be directed to Henry Yuen, Special Programs Examiner, at (571) 272-4856.

PETITION GRANTED

Robert Olszewski, Director
Technology Center 3700

UNITED STATES PATENT AND TRADEMARK OFFICE

Commissioner for Patents
United States Patent and Trademark Office
P.O. Box 1450
Alexandria, VA 22313-1450
www.uspto.gov

APPLICATION NUMBER	FILING/RECEIPT DATE	FIRST NAMED APPLICANT	ATTORNEY DOCKET NUMBER
10/897,840	07/23/2004	Robert Anders	1867.001US1

SCHWEGMAN, LUNDBERG, WOESSNER & KLUTH, P.A.
P.O. BOX 2938
MINNEAPOLIS MN 55402

DATE MAILED: April 21, 2006

DECISION DISMISSING PETITION UNDER 37 CFR 1.138(d)
The declaration of express abandonment will not be recognized

This is in response to the petition under 37 CFR 1.138(d) filed on April 19, 2006, requesting for a refund of any previously paid search fee and excess claims fee in the above-identified application.

The petition is dismissed.

The express abandonment will **not** be recognized for the reason(s) indicated below:

~ 1. The petition was not filed in sufficient time to permit the appropriate officials to recognize the abandonment before an examination has been made of the application. See 37 CFR 1.138(d).

~ 2. The application is not an application filed under 35 U.S.C. 111(a) on or after December 8, 2004.

~ 3. The petition was not signed by a party authorized by 37 CFR 1.33(b)(1), (3) or (4).

Any inquiries concerning this decision should be directed to the Pre-Grant Publication Division at (703) 605-4283.

Barbara J. Debnam
Pre-Grant Publication Division

UNITED STATES PATENT AND TRADEMARK OFFICE

Commissioner for Patents
United States Patent and Trademark Office
P.O. Box 1450
Alexandria, VA 22313-1450
www.uspto.gov

Date : March 6, 2009

Patent No. :7422277
Inventor(s) :Kurt-Manfred Kupper, et al.
Issued :October 28, 2008
Title :PROCESS FOR THE REMOVAL OF VOLATILE COMPOUNDS FROM MIXTURES
:OF SUBSTANCES USING A MICRO-EVAPORATOR

Re: Request for Certificate of Correction

Consideration has been given your request for the issuance of a certificate of correction for the above-identified patent under the provisions of 37 CFR 1.322 and/or 1.323.

Assignees' names and addresses (assignment data) printed in a patent are based *solely* on information supplied in the appropriate space for identifying the assignment data, i.e., item 3 of the Fee(s) Transmittal Form PTOL-85B. After payment of the issue fee, correction of assignment data submitted on the PTOL-85B can only be done by Certificate of Correction under 37 CFR 1.323, with a request under 37 CFR 3.81(b).

A request for a patent to be corrected to state the name of the assignee must:

A. state that the assignment was submitted for recordation as set forth in 37 CFR 3.11 before issuance of the patent;

B. include a request for a certificate of correction under 37 CFR 1.323 along with the fee set forth in 37 CFR 1.20(a); and

C. include the processing fee set forth in 37 CFR 1.17(i).

If the request is granted, Certificates of Correction Branch will be notified that a Certificate of Correction may be issued.

See Manual of Patent Examining Procedure, Section 1481.01 (Rev. 3) (Oct. 2005).

Applicant has not included items A and or C above, accordingly, the request for Certificate of Correction to add or change the assignee data is dismissed.

Any request under 37 CFR 3.81(b) should be directed to the following address or facsimile number:

By mail: Mail Stop PETITIONS
Commissioner for Patents
Post Office Box 1450
Alexandria, VA 22313-1450

By hand:	Customer Service Window Randolph Building 401 Dulany Street Alexandria, VA 22314
By fax:	571-273-8300 ATTN: Office of Petitions
EFS web	uspto.gov/ebc/index.html (must be registered as an e-filer to submit responses) Technical Support 1-866-217-9197

Any inquiry concerning this communication should be directed to Ms. A. Green at (703) 308-9380 ext. 123.

Mary Diggs, Supervisor
Decisions & Certificates
of Correction Branch
(703) 308-9390 or (703) 308- 9390 ext. 123

Bayer MaterialScience LLC
100 Bayer Road
Pittsburgh PA 15205-9741

/arg

UNITED STATES PATENT AND TRADEMARK OFFICE

Commissioner for Patents
United States Patent and Trademark Office
P.O. Box 1450
Alexandria, VA 22313-1450
www.uspto.gov

MAILED

JAN 29 2010

OFFICE OF PETITIONS

BAYER MATERIAL SCIENCE LLC
100 BAYER ROAD
PITTSBURGH, PA 15205

In re Patent No. 7,442,277	:	
Issue Date: October 28, 2008	:	
Application No. 10/897,854	:	ON PETITION
Filed: July 23, 2004	:	
Attorney Docket No. PO-8178/LEA 36,667	:	

This is a decision on the petition filed November 12, 2009, which is being treated as a request under 37 CFR 3.81(b)[1] to correct the name of the assignee on the front page of the above-identified patent by way of a Certificate of Correction. The $130 processing fee under 37 CFR 1.17(i) is being charged to counsel's deposit account as authorized.

The petition is not signed by a registered patent attorney or patent agent of record. However, in accordance with 37 CFR 1.34, the signature of Mr. Robert S. Klemz appearing on the correspondence shall constitute a representation to the United States Patent and Trademark Office that he is authorized to represent the particular party in whose behalf he acts.

The request is **GRANTED**.

Telephone inquiries concerning this decision may be directed to the undersigned at (571) 272-3204. Inquiries regarding the issuance of a certificate of correction should be directed to the Certificates of Correction Branch at (571) 272-4200.

The Certificates of Correction Branch will be notified of this decision granting the petition under 37 CFR 3.81(b) and directing issuance of the requested Certificate of Correction.

Sherry D. Brinkley
Petitions Examiner
Office of Petitions

[1] *See* MPEP 1309, subsection II; and Official Gazette of June 22, 2004.

UNITED STATES PATENT AND TRADEMARK OFFICE

UNITED STATES DEPARTMENT OF COMMERCE
United States Patent and Trademark Office
Address: COMMISSIONER FOR PATENTS
P.O. Box 1450
Alexandria, Virginia 22313-1450
www.uspto.gov

BAKER BOTTS L.L.P.
2001 ROSS AVENUE
SUITE 600
DALLAS, TX 75201-2980

Mail Date: 05/06/2010

Applicant	: Jeffrey W. Sharp	: DECISION ON REQUEST FOR
Patent Number	: 7619158	: RECALCULATION of PATENT
Issue Date	: 11/17/2009	: TERM ADJUSTMENT IN VIEW
Application No	: 10/897,871	: OF WYETH AND NOTICE OF INTENT TO
Filed	: 07/22/2004	: ISSUE CERTIFICATE OF CORRECTION
		:

The Request for Recalculation is **GRANTED** to the extent indicated.

The patent term adjustment has been determined to be **1036** days. The USPTO will *sua sponte* issue a certificate of correction reflecting the amount of PTA days determined by the recalculation.

Prior to the issuance of the certificate of correction, the USPTO will afford patentee an opportunity to be heard and request reconsideration. Accordingly, patentee has **one month or thirty (30) days**, whichever is longer, to file a request for reconsideration of this patent term adjustment calculation. See 35 U.S.C. 154(b)(3)(B)(ii) and 37 CFR 1.322(a)(4). No extensions of time will be granted under 37 CFR 1.136.

Patentee should use document code PET.OP if electronically filing a request for reconsideration of this patent term adjustment calculation. The patentee must also include the information required by 37 CFR 1.705(b)(2) and the fee required by 37 CFR 1.18(e). If patentee does not file a timely request for reconsideration of this patent term adjustment calculation including the information required by 37 CFR 1.705(b)(2) and the fee required by 37 CFR 1.18(e), the USPTO will issue a certificate of correction reflecting the PTA determination noted above.

Patentee should be aware that in order to preserve the right to review in the United States District Court for the District of Columbia of the USPTO patent term adjustment determination, patentee must ensure that he or she also take the steps required under 35 U.S.C. 154(b)(4)(A) in a timely manner. Nothing in the request for recalculation should be construed as providing an alternative time frame for commencing a civil action under 35 U.S.C. 154(b)(4)(A).

Any questions concerning this decision should be directed to the Office of Patent Legal Administration at 571-272-7702.

UNITED STATES PATENT AND TRADEMARK OFFICE

Commissioner for Patents
United States Patent and Trademark Office
P.O. Box 1450
Alexandria, VA 22313-1450
www.uspto.gov

Robert A. Seldon
18th Floor
10940 Wilshire Blvd.
Los Angeles, CA 90024-3952

MAILED

MAY 12 2009

OFFICE OF PETITIONS

In re Application of
Bruce McLucas
Application No. 10/897,877
Filed: July 22, 2004
Attorney Docket No. McLucas/01

ON PETITION

This is a decision on the petition under 37 CFR 1.137(b), filed April 8, 2009, to revive the above-identified application.

The application became abandoned for failure to file a reply to the non-final Office action mailed on September 3, 2008.

The petition satisfies the requirements of 37 CFR 1.137(b) in that petitioner has supplied (1) the reply in the form of a response; (2) the petition fee of $810; and (3) a proper statement of unintentional delay. Therefore, the petition is **GRANTED**.

The file does not indicate a change of address has been submitted, although the address given on the petition differs from the address of record. If appropriate, a change of address should be filed in accordance with MPEP 601.03. A courtesy copy of this decision is being mailed to the address given on the petition; however, the Office will mail all future correspondence solely to the address of record.

This application file is being referred to Technology Center Art Unit 3767 for review of the response filed with the present petition.

Telephone inquiries concerning this decision should be directed to the undersigned at (571) 272-3226.

Andrea Smith
Petitions Examiner
Office of Petitions

cc: Robert A. Seldon
12121 Wilshire Boulevard
Suite 1300
Los Angeles, CA 90025

UNITED STATES PATENT AND TRADEMARK OFFICE

10 897902

COMMISSIONER FOR PATENTS
UNITED STATES PATENT AND TRADEMARK OFFICE
P.O. BOX 1450
ALEXANDRIA, VA 22313-1450
www.uspto.gov

Stephen H. Doctor
MCDONNELL BOEHNEN HULBET & BERGHOFF
300 South Wacker
Suite 3200
Chicago, IL 60606

In re Application of: SIRNA THERAPEUTICS, INC. PCT No.: PCT/US02/15876 International Filing Date: 17 May 2002 Priority Date: 18 May 2001 Attorney's Docket No.: 02-312-PCT:600.019 For: CONJUGATES AND COMPOSITIONS FOR CELLULAR DELIVERY	DECISION ON PETITION UNDER 37 CFR 1.10

This decision is issued in response to the "Petition To Accord Express Mail 'Date In' As Filing Date" filed 03 August 2004, treated herein under 37 CFR 1.10(c). The petition seeks to correct the international filing date to 17 May 2002. No petition fee is required.

BACKGROUND

Applicant initiated this international application by filing a Request (Form PCT/RO/101) and accompanying materials via "Express Mail" label number EL602855817US. The transmittal letter filed with the application materials lists this "Express Mail" label number, and identifies the date of deposit as 17 May 2002.

On 20 June 2002, the RO/US mailed a "Notification Of The International Application Number And Of The International Filing Date" (Form PCT/RO/105) identifying 20 May 2002 as the international filing date.

On 03 August 2004, applicant filed the petition considered herein. The petition seeks correction of the international filing date to 17 May 2002, the date on which applicant claims the application was deposited with the USPS. The submission includes, among other materials, a copy of the customer receipt for Express Mail label number EL602855817US, which bears a "date in" of 17 May 2002.

DISCUSSION

The present international application was accorded an international filing date of 20 May 2002. Applicant asserts that the proper international filing date is 17 May 2002, the date on which the Express Mail envelope containing the application materials was deposited with the USPS. As noted above, applicant has supplied a copy of the customer receipt for the Express

Mail envelope bearing a "date in" of 17 May 2002, and the Express Mail label number for this envelope was identified on the transmittal letter filed with the application papers. In addition, the USPTO Express Mail database identifies 17 May 2002 as the date on which this Express Mail envelope was accepted by the USPS.

Based on applicant's statements, the Express Mail database acceptance date of 17 May 2002, and the 17 May 2002 "date in" entered by the USPS on the Express Mail label, it is concluded that the present application was deposited as "Express Mail" with the USPS on 17 May 2002. Accordingly, pursuant to 37 CFR 1.10(c), the international filing date is appropriately corrected to 17 May 2002.

CONCLUSION

Applicant's petition for correction of the international filing date is **GRANTED**.

The international filing date is corrected to **17 May 2002**. The "Notification Of The International Application Number And Of The International Filing Date" (Form PCT/RO/105) mailed 20 June 2002, which identified 20 May 2002 as the international filing date, is hereby **VACATED**.

A corrected "Notification Of The International Application Number And Of The International Filing Date" (Form PCT/RO/105) which correctly identifies the international filing date as **17 May 2002** is issued herewith. Copies of this decision and the corrected Form PCT/RO/105 will be forwarded to the International Bureau.

This application is being forwarded to the RO/US for further processing in accordance with this decision.

Richard M. Ross
PCT Petitions Attorney
PCT Legal Office
Telephone: (571) 272-3296
Facsimile: (571) 273-0459

UNITED STATES PATENT AND TRADEMARK OFFICE

Commissioner for Patents
United States Patent and Trademark Office
P.O. Box 1450
Alexandria, VA 22313-1450
www.uspto.gov

MILDE & HOFFBERG LLP
STE 460
10 BANK STREET
WHITE PLAINS NY 10606

COPY MAILED

SEP 2 8 2007

OFFICE OF PETITIONS

In re Application of		
Detlef Haeselich	:	
Application No. 10/897,931	:	DECISION ON
Filed: July 23, 2004	:	PETITION
Attorney Docket No. US 203-KFM	:	
CZ1128-US		

This is in response to the petition to withdraw the holding of abandonment under 37 CFR 1.181, filed July 14, 2005. The petition was recently forwarded to the Office of Petitions for consideration.

The petition under 37 CFR 1.181 is **DISMISSED**.

Any request for reconsideration of this decision must be submitted within **TWO (2) MONTHS** from the mail date of this decision. The reconsideration request should include a cover letter entitled "Renewed Petition under 37 CFR 1.181". Extensions of time under 37 CFR 1.136(a) are permitted.

The above-identified application became abandoned for failure to timely file a reply to the Notice to File Missing Parts, mailed October 12, 2004. This Notice set a extendable period for reply of two (2) months for applicant to submit an oath or declaration, an English translation of the specification (together with a statement that the translation is accurate), and additional claims fees (if applicable). No reply having been received, the application became abandoned on December 13, 2004. The Office mailed a Notice of Abandonment on July 7, 2005.

Petitioner states that he timely filed an oath or declaration, together with an English translation of the specification, before the Notice was mailed, on September 14, 2004. In support thereof, petitioner has included a copy of a USPTO date stamped postcard receipt, identifying this application, itemizing a declaration and English translation of the application, and bearing a USPTO date stamp dated September 14, 2007.

A postcard receipt which itemizes and properly identifies the items which are being filed serves as *prima facie* evidence of receipt in the Office of all items listed thereon on the date stamped thereon by the Office. See MPEP 503.

Accordingly, it is concluded that petitioner has established that a declaration and English translation of the specification were filed in this application on September 17, 2004. However, petitioner has not supplied the Office with a copy of the English translation, together with the statement that the translation is accurate. Rather, with the petition, petitioner only supplied the Office with a Preliminary Amendment. Accordingly, petitioner is requested to supply the Office with the copy of the English translation demonstrated to have been filed on September 14, 2004.

Further correspondence with respect to this matter should be addressed as follows:

By mail: Mail Stop Petitions
Commissioner for Patents
P.O. Box 1450
Alexandria VA 22313-1450

By FAX: (571)273-8300
Attn: Office of Petitions

Telephone inquiries related to this decision should be directed to the undersigned at 571-272-3207.

Cliff Congo
Petitions Attorney
Office of Petitions

UNITED STATES PATENT AND TRADEMARK OFFICE

Commissioner for Patents
United States Patent and Trademark Office
P.O. Box 1450
Alexandria, VA 22313-1450
www.uspto.gov

COPY MAILED

NOV 14 2007

OFFICE OF PETITIONS

MILDE & HOFFBERG LLP
STE 460
10 BANK STREET
WHITE PLAINS NY 10606

In re Application of
Detlef Haeselich :
Application No. 10/897,931 : DECISION ON
Filed: July 23, 2004 : PETITION
Attorney Docket No. US 203-KFM :
CZ1128-US

This is in response to the renewed petition to withdraw the holding of abandonment under 37 CFR 1.181, filed October 5, 2007.

The petition under 37 CFR 1.181 is **GRANTED**.

The above-identified application became abandoned for failure to timely file a reply to the Notice to File Missing Parts, mailed October 12, 2004. This Notice set a extendable period for reply of two (2) months for applicant to submit an oath or declaration, an English translation of the specification (together with a statement that the translation is accurate), and additional claims fees (if applicable). No reply having been received, the application became abandoned on December 13, 2004. The Office mailed a Notice of Abandonment on July 7, 2005. Applicant filed a petition to withdraw the holding of abandonment on July 14, 2005, asserting that a timely filed oath or declaration, together with an English translation of the specification, were filed on September 14, 2004, before the Notice was mailed. In support thereof, petitioner included a properly itemized, USPTO date stamped postcard receipt. However, the petition was dismissed in a decision mailed on September 28, 2007. The decision acknowledged that petitioner had indeed demonstrated

that the items were timely filed. However, petitioner did not supply the Office with a copy of the English translation of the specification.

With the instant renewed petition, petitioner has included a copy of the English translation of the specification, together with a statement that the translation is accurate.

The matter is being forwarded to the Office of Patent Application Processing for pre-examination processing, using the English language translation shown to have been filed on September 14, 2004 (copy supplied with the petition dated October 5, 2007).

Telephone inquiries related to this decision should be directed to the undersigned at 571-272-3207.

Cliff Congo
Petitions Attorney
Office of Petitions

UNITED STATES PATENT AND TRADEMARK OFFICE

Commissioner for Patents
United States Patent and Trademark Office
P.O. Box 1450
Alexandria, VA 22313-1450
www.uspto.gov

MAILED

MAY 15 2009

OFFICE OF PETITIONS

Myers Andras Sherman, LLP
19900 MacArthur Boulevard
Suite 1150
Irvine, CA 92612

In re Application of	:	
Rui-Tao Dong et al.	:	
Application No. 10/897,941	:	DECISION ON PETITION
Filed: July 22, 2004	:	TO WITHDRAW
Attorney Docket No. TRE1.PAU.08	:	FROM RECORD
	:	

This is a decision on the Request to Withdraw as attorney or agent of record under 37 C.F.R. § 1.36(b), filed January 18, 2006.

The request is **moot because a revocation of power of attorney has been filed**.

A review of the file record indicates that the power of attorney to Vic Y. Yin and all attorneys/agents of record have been revoked by the assignee of the patent application on February 1, 2006. Accordingly, the request to withdraw under 37 C.F.R. § 1.36(b) is moot.

All future communications from the Office will be directed to the below-listed address until otherwise notified by applicant.

Telephone inquires concerning this decision should be directed to Kimberly Inabinet at 571-272- 4618.

Kimberly Inabinet
Petitions Examiner
Office of Petitions

cc: Patterson, Thuente, Skaar & Christensen, P.A.
4800 IDS Center
80 South 8th Street
Minneapolis, MN 55402-2100

UNITED STATES PATENT AND TRADEMARK OFFICE

Commissioner for Patents
United States Patent and Trademark Office
P.O. Box 1450
Alexandria, VA 22313-1450
www.uspto.gov

KAPLAN GILMAN GIBSON & DERNIER
900 ROUTE 9 NORTH
WOODBRIDGE NJ 07095

COPY MAILED

JAN 20 2006

OFFICE OF PETITIONS

In re Application of	:
Terry D. White et al	:
Application No. 10/897,942	: DECISION GRANTING PETITION
Filed: July 23, 2004	: UNDER 37 CFR 1.137(b)
Attorney Docket No. 348/4 CON	:

This is a decision on the petition under 37 CFR 1.137(b), filed October 13, 2005, to revive the above-identified application.

The petition is **GRANTED**.

The petition satisfies the conditions for revival pursuant to the provisions of 37 CFR 1.137(b) in that (1) the reply in the form of an RCE; (2) the petition fee; and (3) the required statement of unintentional delay have been received. Accordingly, the reply to the final Office action of March 4, 2005, is accepted as having been unintentionally delayed.

Telephone inquiries concerning this decision should be directed to the undersigned at (571) 272-3208.

This matter is being referred to Technology Center AU 2851.

Karen Creasy

Karen Creasy
Petitions Examiner
Office of Petitions
Office of the Deputy Commissioner
for Patent Examination Policy

UNITED STATES PATENT AND TRADEMARK OFFICE

COMMISSIONER FOR PATENTS
UNITED STATES PATENT AND TRADEMARK OFFICE
P.O. BOX 1450
ALEXANDRIA, VA 22313-1450
WWW.USPTO.GOV

Paper No. None

DUANE, MORRIS, LLP
3200 SOUTHWEST FREEWAY
SUITE 3150
HOUSTON TX 77027

COPY MAILED

JUN 0 8 2005

OFFICE OF PETITIONS

In re Application of
Roger D. Entralgo and Michael Neil Shaw
Application No. 10/897,961
Filed: July 23, 2004
Attorney Docket No. 05433-143
Title: REMOTELY OPERATED DEPLOYMENT SYSTEM AND METHOD OF USE

DECISION ON PETITION UNDER C.F.R. §1.47(A)

This is in response to the petition under 37 C.F.R. §1.47(a)[1], filed March 7, 2005.

On July 23, 2004, the application was filed, identifying Roger D. Entralgo and Michael Neil Shaw as joint inventors. The application was deposited without an executed oath or declaration. On October 7, 2004, a "Notice to File Missing Parts of Nonprovisional Application – Filing Date Granted" (Notice) was mailed, indicating that a fully executed oath or declaration and the associated surcharge were required. This Notice set a two-month period for reply.

Along with the instant petition, Petitioner has submitted a declaration which has been executed by the second listed joint inventor, the petition fee, the surcharge, a statement of facts, and a three-month extension of time to make timely this response.

[1]A grantable petition under 37 C.F.R. §1.47(a) requires:

(1) the petition fee of $130;
(2) a surcharge of either $65 or $130 if the petition is not filed at the time of filing the application, as set forth in 37 CFR § 1.16(e);
(3) a statement of the last known address of the non-signing inventors;
(4) either
  a) proof that a copy of the entire application (specification, claims, drawings, and the oath or declaration) was sent or given to the non-signing inventor for review and proof that the non-signing inventor refuses to join in the application or
  b) proof that the non-signing inventor cannot be found or reached after diligent effort;
(5) a declaration which complies with 37 CFR §1.63.

Petitioner has met requirements (1) – (2) above.

Regarding the third requirement, petitioner has failed to include a statement of the last known address of the non-signing inventor[2].

Regarding the fourth requirement, Petitioner has not shown that a *complete* copy of the application was sent to the non-signing inventor. Ms. Davison sets forth that she "presented the applications to Mr. Entralgo on at least one prior occasion, on or around December 6, 2004." It is not clear if this presentation consisted of a complete copy of the application. The declarant has added that she "verbally presented Mr. Entralgo with the application papers" by telling him that she planned on sending a copy of them to him – clearly this does not constitute an acceptable presentation.

As it is not clear if the non-signing inventor was ever presented with a complete copy of the application, it follows that one cannot refuse to sign something which one has not seen. A refusal by an inventor to sign an oath or declaration when the inventor has not been presented with the application papers does not itself suggest that the inventor is refusing to join the application unless it is clear that the inventor understands exactly what he or she is being asked to sign and refuses to accept the application papers. It is reasonable to require that the inventor be presented with the application papers before a petition under 37 CFR §1.47 is granted since such a procedure ensures that the inventor is apprised of the application to which the oath or declaration is directed[3].

On renewed petition, Petitioner should mail a complete copy of the application to the non-signing inventor (if needed) and indicate that a complete copy of the application has been sent to the same.

Regarding the fifth requirement, petitioner has not submitted a declaration which complies with 37 CFR §1.63. The declaration submitted with the instant petition contains a non-dated change by the signing inventor[4].

For the above reasons, the petition is **DISMISSED**.

Any reply must be submitted within **TWO (2) MONTHS** from the mail date of this decision. Extensions of time under 37 C.F.R. §1.136(a) are permitted. The reply should include a cover letter entitled "Renewed Petition Under 37 C.F.R. 1.47(a)." This is not a final agency action within the meaning of 5 U.S.C §704.

The renewed petition should indicate in a prominent manner that the attorney handling this matter is Paul Shanoski.

Any renewed petition may be submitted by mail[5], hand-delivery[6], or facsimile[7].

---

2 See MPEP 409.03(e).
3 In re Gray, 115 USPQ 80 (Comm'r Pat. 1956).
4 See 37 C.F.R. §1.52(c)(1) and MPEP 605.04(a).
5 Mail Stop Petition, Commissioner for Patents, United States Patent and Trademark Office, P.O. Box 1450, Alexandria, VA, 22313-1450.
6 Customer Window, Randolph Building, 401 Dulaney Street, Alexandria, VA, 22314.

The application file will be retained in the Office of Petitions for two (2) months.

Telephone inquiries regarding *this decision* should be directed to the undersigned at (571) 272-3225. All other inquiries concerning examination procedures or status of the application should be directed to the Technology Center.

Paul Shanoski
Senior Attorney
Office of Petitions
United States Patent and Trademark Office

7 (703) 872-9306 - please note this is a central facsimile number.

UNITED STATES PATENT AND TRADEMARK OFFICE

COMMISSIONER FOR PATENTS
UNITED STATES PATENT AND TRADEMARK OFFICE
P.O. BOX 1450
ALEXANDRIA, VA 22313-1450
WWW.USPTO.GOV

Paper No. None

COPY MAILED

AUG 2 4 2005

OFFICE OF PETITIONS

DUANE, MORRIS, LLP
3200 SOUTHWEST FREEWAY
SUITE 3150
HOUSTON TX 77027

In re Application of
Roger D. Entralgo and Michael Neil Shaw
Application No. 10/897,961
Filed: July 23, 2004
Attorney Docket No. 05433-143
Title: REMOTELY OPERATED DEPLOYMENT SYSTEM AND METHOD OF USE

DECISION ON RENEWED PETITION UNDER C.F.R. §1.47(A)

This is in response to the renewed petition under 37 C.F.R. §1.47(a)[1], filed August 8, 2005.

On July 23, 2004, the application was filed, identifying Roger D. Entralgo and Michael Neil Shaw as joint inventors. The application was deposited without an executed oath or declaration. On October 7, 2004, a "Notice to File Missing Parts of Nonprovisional Application – Filing Date Granted" (Notice) was mailed, indicating that a fully executed oath or declaration and the associated surcharge were required. This Notice set a two-month period for reply.

Along with the original petition, Petitioner has submitted a declaration which has been executed by the second listed joint inventor, the petition fee, the surcharge, a statement of facts, and a three-month extension of time to make timely this response.

[1]A grantable petition under 37 C.F.R. §1.47(a) requires:

(1) the petition fee of $130;
(2) a surcharge of either $65 or $130 if the petition is not filed at the time of filing the application, as set forth in 37 CFR § 1.16(e);
(3) a statement of the last known address of the non-signing inventors;
(4) either
  a) proof that a copy of the entire application (specification, claims, drawings, and the oath or declaration) was sent or given to the non-signing inventor for review and proof that the non-signing inventor refuses to join in the application or
  b) proof that the non-signing inventor cannot be found or reached after diligent effort;
(5) a declaration which complies with 37 CFR §1.63.

The petition was dismissed via the mailing of a decision on June 8, 2005, for failing to meet requirements (3) - (5) above.

With this renewed petition, Petitioner has submitted an acceptable declaration and the last known address of the non-signing joint inventor, and proof that a complete copy of the application was sent to the non-signing joint inventor.

Therefore, the second renewed petition is **GRANTED** and this application is hereby accorded Rule §1.47(a) status.

As provided in Rule 1.47(a), this Office will forward notice of this application's filing to the non-signing inventor at the address given on the declaration. Notice of the filing of this application will also be published in the Official Gazette.

Telephone inquiries regarding this decision should be directed to the undersigned at (571) 272-3225. All other inquiries concerning examination procedures or status of the application should be directed to the Technology Center.

Paul Shanoski
Senior Attorney
Office of Petitions
United States Patent and Trademark Office

UNITED STATES PATENT AND TRADEMARK OFFICE

Commissioner for Patents
United States Patent and Trademark Office
P.O. Box 1450
Alexandria, VA 22313-1450
www.uspto.gov

Patent Law Offices of Michael E. Woods
19 Vista Marin Drive
San Rafael, CA 94903-5205

COPY MAILED
NOV 25 2008

In re Application of	:	
Roger Bauchspies	:	
Application No. 10/897,965	:	DECISION ON PETITION
Filed: July 22, 2004	:	
Attorney Docket No. 20042-7004	:	

This is a decision on the petition under the unintentional provisions of 37 CFR 1.137(b), filed October 29, 2008, to revive the above-identified application.

The petition is **GRANTED**.

The application became abandoned for failure to reply in a timely manner to the non-final Office action mailed, January 02, 2008, which set a shortened statutory period for reply of three (3) months. No extensions of time under the provisions of 37 CFR 1.136(a) were obtained. Accordingly, the application became abandoned on April 03, 2008.

The petition satisfies the requirements of 37 CFR 1.137(b) in that petitioner has supplied (1) the reply in the form of an amendment, (2) the petition fee of $810, and (3) a proper statement of unintentional delay.

Telephone inquiries concerning this decision should be directed to Shelley Clement at (571)272-6052 or in her absence to the undersigned at (571)272-7099.

This application is being referred to Technology Center AU 2624 for appropriate action by the Examiner in the normal course of business on the reply received

David Bucci
Petitions Examiner
Office of Petitions

UNITED STATES PATENT AND TRADEMARK OFFICE

UNITED STATES DEPARTMENT OF COMMERCE
United States Patent and Trademark Office
Address: COMMISSIONER FOR PATENTS
P.O. Box 1450
Alexandria, Virginia 22313-1450
www.uspto.gov

SEED INTELLECTUAL PROPERTY LAW GROUP PLLC
701 FIFTH AVE
SUITE 5400
SEATTLE, WA 98104

Mail Date: 04/21/2010

Applicant	: Motohide Yamazaki	: DECISION ON REQUEST FOR
Patent Number	: 7645600	: RECALCULATION of PATENT
Issue Date	: 01/12/2010	: TERM ADJUSTMENT IN VIEW
Appliction No	: 10/897,981	: OF WYETH AND NOTICE OF INTENT TO
Filed	: 07/23/2004	: ISSUE CERTIFICATE OF CORRECTION
		:

The Request for Recalculation is **GRANTED** to the extent indicated.

The patent term adjustment has been determined to be **454** days. The USPTO will *sua sponte* issue a certificate of correction reflecting the amount of PTA days determined by the recalculation.

Prior to the issuance of the certificate of correction, the USPTO will afford patentee an opportunity to be heard and request reconsideration. Accordingly, patentee has **one month or thirty (30) days**, whichever is longer, to file a request for reconsideration of this patent term adjustment calculation. See 35 U.S.C. 154(b)(3)(B)(ii) and 37 CFR 1.322(a)(4). No extensions of time will be granted under 37 CFR 1.136.

Patentee should use document code PET.OP if electronically filing a request for reconsideration of this patent term adjustment calculation. The patentee must also include the information required by 37 CFR 1.705(b)(2) and the fee required by 37 CFR 1.18(e). If patentee does not file a timely request for reconsideration of this patent term adjustment calculation including the information required by 37 CFR 1.705(b)(2) and the fee required by 37 CFR 1.18(e), the USPTO will issue a certificate of correction reflecting the PTA determination noted above.

Patentee should be aware that in order to preserve the right to review in the United States District Court for the District of Columbia of the USPTO patent term adjustment determination, patentee must ensure that he or she also take the steps required under 35 U.S.C. 154(b)(4)(A) in a timely manner. Nothing in the request for recalculation should be construed as providing an alternative time frame for commencing a civil action under 35 U.S.C. 154(b)(4)(A).

Any questions concerning this decision should be directed to the Office of Patent Legal Administration at 571-272-7702.

UNITED STATES PATENT AND TRADEMARK OFFICE

Commissioner for Patents
United States Patent and Trademark Office
P.O. Box 1450
Alexandria, VA 22313-1450
www.uspto.gov

COPY MAILED
OCT 1 2 2006
OFFICE OF PETITIONS

FOLEY & LARDNER LLP
1530 PAGE MILL ROAD
PALO ALTO CA 94304

In re Application of	:	
Fuerst	:	
Application No. 10/897,998	:	DECISION ON PETITION
Filed: July 22, 2004	:	TO WITHDRAW
Attorney Docket No. 323331-1160	:	FROM RECORD
	:	

This is a decision on the Request to Withdraw as attorney or agent of record under 37 C.F.R. § 1.36(b), filed June 13, 2006.

The request is **APPROVED**.

A grantable request to withdraw as attorney/agent of record must be signed by every attorney/agent seeking to withdraw or contain a clear indication that one attorney is signing on behalf of another/others. A request to withdraw will not be approved unless at least 30 (thirty) days would remain between the date of approval and the later of the expiration date of a time to file a response or the expiration date of the maximum time period which can be extended under 37 C.F.R. § 1.136(a).

The request was signed by Lorna L. Tanner on behalf of all attorneys of record who are associated with customer No. 38706.

All attorneys/agents associated with the Customer Number 38706 have been withdrawn.

Applicant is reminded that there is no attorney of record at this time.

The request to change the correspondence of record is not acceptable as the requested correspondence address is not that of: (1) the first named signing inventor; or (2) an intervening assignee of the entire interest under 37 C.F.R 3.71. All future communications from the Office will be directed to the first named signing inventor at the first copied address below until otherwise properly notified by the applicant.

In order to request or take action in a patent matter, the assignee must establish its ownership of the patent to the satisfaction of the Director. In this regard, a Statement under 37 CFR 3.73(b) must have either: (i) documentary evidence of a chain of title from the original owner to the assignee (*e.g.*, copy of an executed assignment), and a statement affirming that the documentary evidence of the chain of title from the original owner to the assignee was or concurrently is being submitted for recordation pursuant to § 3.11; or (ii) a statement specifying where documentary evidence of a chain of title from the original owner to the assignee is recorded in the assignment records of the Office (*e.g.*, reel and frame number).

There is an outstanding Office action mailed August 21, 2006 that requires a reply from the applicant.

Telephone inquiries concerning this decision should be directed to April Wise at 571-272-1642.

April M. Wise
Petitions Examiner
Office of Petitions

cc: RORY W. FUERST
101 ISABELLA AVENUE
ATHERTON, CA 94027

cc: ROB WOOLSTON, ESQ.
PERKINS COIE LLP
1201 THIRD AVENUE
SUITE 4000
SEATTLE, WA 98101

UNITED STATES PATENT AND TRADEMARK OFFICE

Commissioner for Patents
United States Patent and Trademark Office
P.O. Box 1450
Alexandria, VA 22313-1450
www.uspto.gov

PERKINS COIE LLP
PATENT-SEA
P.O. BOX 1247
SEATTLE, WA 98111-1247

COPY MAILED

SEP 2 4 2008

OFFICE OF PETITIONS

ON PETITION

In re Application of :
Fuerst, Rory W. :
Application No. 10/897,998 :
Filed: July 22, 2004 :
Attorney Docket No. None :

This is a decision on the petition under the unintentional provisions of 37 CFR 1.137(b), filed July 28, 2008, to revive the above-identified application.

The petition is **DISMISSED**.

Any request for reconsideration of this decision must be submitted within TWO (2) MONTHS from the mail date of this decision. Extensions of time under 37 CFR 1.136(a) are permitted. The reconsideration request should include a cover letter entitled "Renewed Petition under 37 CFR 1.137(b)." This is **not** a final agency action within the meaning of 5 U.S.C. § 704.

A grantable petition under 37 CFR 1.137(b) must be accompanied by: (1) the required reply, unless previously filed; (2) the petition fee as set forth in 37 CFR 1.17(m); (3) a statement that the entire delay in filing the required reply from the due date for the reply until the filing of a grantable petition pursuant to 37 CFR 1.137(b) was unintentional; and (4) any terminal disclaimer (and fee as set forth in 37 CFR 1.20(d)) required by 37 CFR 1.137(d). Where there is a question as to whether either the abandonment or the delay in filing a petition under 37 CFR 1.137 was unintentional, the Director may require additional information. See MPEP 711.03(c)(II)(C) and (D). The instant petition lacks item (1), petitioner did not submit the required reply in the form of the payment associated with the issue and publication fees, as required by the Notice of Allowance and Fee(s) Due, mailed September 27, 2007. The issue and publication fees must be provided with any renewed petition. See MPEP 711.03(c)(II)A1.

In view of the above, the Request for Continued Examination (RCE) submitted with the petition herein is considered improper and will not be considered at this time.

It is not apparent whether the statement of unintentional delay was signed by a person who would have been in a position of knowing that the entire delay in filing the required reply from the due date for the reply until the filing of a grantable petition pursuant to 37 CFR 1.137(b) was unintentional. Nevertheless, in accordance with 37 CFR 10.18, the statement is accepted as constituting a certification of unintentional delay. However, in the event that petitioner has no knowledge that the delay was unintentional, petitioner must make such an inquiry to ascertain that, in fact, the delay was unintentional. If petitioner discovers that the delay was intentional, petitioner must notify the Office.

Further correspondence with respect to this matter should be addressed as follows:

By Mail: Mail Stop PETITION
Commissioner for Patents
P. O. Box 1450
Alexandria, VA 22313-1450

By hand: U. S. Patent and Trademark Office
Customer Service Window, Mail Stop Petitions
Randolph Building
401 Dulany Street
Alexandria, VA 22314

The centralized facsimile number is **(571) 273-8300.**

Telephone inquiries concerning this decision should be directed to Alicia Kelley at (571) 272-6059.

Sherry D. Brinkley
Petitions Examiner
Office of Petitions

UNITED STATES PATENT AND TRADEMARK OFFICE

UNITED STATES DEPARTMENT OF COMMERCE
United States Patent and Trademark Office
Address: COMMISSIONER FOR PATENTS
P.O. Box 1450
Alexandria, Virginia 22313-1450
www.uspto.gov

APPLICATION NUMBER	FILING OR 371(C) DATE	FIRST NAMED APPLICANT	ATTY. DOCKET NO./TITLE
10/897,998	07/22/2004	Rory W. Fuerst	

CONFIRMATION NO. 1728

POA ACCEPTANCE LETTER

25096
PERKINS COIE LLP
PATENT-SEA
P.O. BOX 1247
SEATTLE, WA 98111-1247

OC000000031767736

Date Mailed: 08/26/2008

NOTICE OF ACCEPTANCE OF POWER OF ATTORNEY

This is in response to the Power of Attorney filed 07/28/2008.

The Power of Attorney in this application is accepted. Correspondence in this application will be mailed to the above address as provided by 37 CFR 1.33.

/lswalsh/

Office of Data Management, Application Assistance Unit (571) 272-4000, or (571) 272-4200, or 1-888-786-0101

UNITED STATES PATENT AND TRADEMARK OFFICE

UNITED STATES DEPARTMENT OF COMMERCE
United States Patent and Trademark Office
Address: COMMISSIONER FOR PATENTS
P.O. Box 1450
Alexandria, Virginia 22313-1450
www.uspto.gov

APPLICATION NUMBER	FILING OR 371(C) DATE	FIRST NAMED APPLICANT	ATTY. DOCKET NO./TITLE
10/897,998	07/22/2004	Rory W. Fuerst	

CONFIRMATION NO. 1728

POWER OF ATTORNEY NOTICE

RORY W. FUERST
101 ISABELLA AVENUE
ATHERTON, CA 94027

OC000000031767563

Date Mailed: 08/26/2008

NOTICE REGARDING CHANGE OF POWER OF ATTORNEY

This is in response to the Power of Attorney filed 07/28/2008.

- The Power of Attorney to you in this application has been revoked by the assignee who has intervened as provided by 37 CFR 3.71. Future correspondence will be mailed to the new address of record(37 CFR 1.33).

/lswalsh/

Office of Data Management, Application Assistance Unit (571) 272-4000, or (571) 272-4200, or 1-888-786-0101

UNITED STATES PATENT AND TRADEMARK OFFICE

Commissioner for Patents
United States Patent and Trademark Office
P.O. Box 1450
Alexandria, VA 22313-1450
www.uspto.gov

PERKINS COIE LLP
PATENT-SEA
P.O. BOX 1247
SEATTLE, WA 98111-1247

COPY MAILED

NOV 1 0 2008

OFFICE OF PETITIONS

In re Application of	:	
Rory W. Fuerst	:	
Application No. 10/897,998	:	DECISION ON PETITION
Filed: July 22, 2004	:	
Attorney Docket No. None	:	

This is a decision on the renewed petition under the unintentional provisions of 37 CFR 1.137(b), filed October 23, 2008, to revive the above-identified application.

The petition is **GRANTED**.

The application became abandoned for failure to timely pay the issue and publication fees on or before December 27, 2007, as required by the Notice of Allowance and Fee(s) Due, mailed September 27, 2007, which set a statutory period for reply of three (3) months. Accordingly, the application became abandoned on December 28, 2007. A Notice of Abandonment was mailed January 24, 2008. On July 28, 2008, a petition under 37 CFR 1.137(b) was filed, requesting that the application be revived for consideration of a Request for Continued Examination (RCE) under 37 CFR 1.114. The petition was dismissed in a decision mailed September 24, 2008, since an application abandoned for a failure to pay the issue fee or any portion thereof, must include the issue fee. On October 23, 2008, the present petition was filed, including the requisite issue and publication fees.

The application is revived for consideration of a submission under 37 CFR 1.114 (request for continued examination).

Petitioner is advised that the issue fee paid in the above-identified application cannot be refunded. However, if the above-identified application is again allowed, petitioner may request that the issue fee paid on October 23, 2008, be applied towards the issue fee required by the new Notice of Allowance.

Telephone inquiries concerning this decision should be directed to Alicia Kelley at (571) 272-6059.

The application file is being forwarded to Technology Center AU 3728 for further processing of the request for continued examination under 37 CFR 1.114 filed July 28, 2008.

/SDB/

Sherry D. Brinkley
Petitions Examiner
Office of Petitions

UNITED STATES PATENT AND TRADEMARK OFFICE

Commissioner for Patents
United States Patent and Trademark Office
P.O. Box 1450
Alexandria, VA 22313-1450
www.uspto.gov

PERKINS COIE LLP
PATENT-SEA
P.O. BOX 1247
SEATTLE WA 98111-1247

COPY MAILED
NOV 2 6 2008

In re Application of	:	
Rory W. Fuerst	:	
Application No. 10/897,998	:	DECISION GRANTING PETITION
Filed: July 22, 2004	:	UNDER 37 CFR 1.313(c)(2)

This is a decision on the petition under 37 CFR 1.313(c)(2), filed November 24, 2008, to withdraw the above-identified application from issue after payment of the issue fee.

The petition is **GRANTED**.

The above-identified application is withdrawn from issue for consideration of a submission under 37 CFR 1.114 (request for continued examination). *See* 37 CFR 1.313(c)(2).

Petitioner is advised that the issue fee paid on December 27, 2007 cannot be refunded. If, however, this application is again allowed, petitioner may request that it be applied towards the issue fee required by the new Notice of Allowance.[1]

Telephone inquiries should be directed to Terri Williams at (571) 272-2991.

This application is being referred to Technology Center AU 3728 for processing of the request for continued examination under 37 CFR 1.114 and for consideration of the concurrently filed information disclosure statement.

Terri Williams
Petitions Examiner
Office of Petitions

---

[1] *The request to apply the issue fee to the new Notice may be satisfied by completing and returning the new Part B – Fee(s) Transmittal Form (along with any balance due at the time of submission). Petitioner is advised that the Issue Fee Transmittal Form must be completed and timely submitted to avoid abandonment of the application.*

UNITED STATES PATENT AND TRADEMARK OFFICE

UNITED STATES DEPARTMENT OF COMMERCE
United States Patent and Trademark Office
Address: COMMISSIONER FOR PATENTS
P.O. Box 1450
Alexandria, Virginia 22313-1450
www.uspto.gov

FULBRIGHT & JAWORSKI L.L.P.
600 CONGRESS AVE.
SUITE 2400
AUSTIN, TX 78701

Mail Date: 04/21/2010

Applicant	: Thomas Spies	: DECISION ON REQUEST FOR
Patent Number	: 7666417	: RECALCULATION of PATENT
Issue Date	: 02/23/2010	: TERM ADJUSTMENT IN VIEW
Appliction No	: 10/898,003	: OF WYETH AND NOTICE OF INTENT TO
Filed	: 07/23/2004	: ISSUE CERTIFICATE OF CORRECTION
		:

The Request for Recalculation is **GRANTED** to the extent indicated.

The patent term adjustment has been determined to be **381** days. The USPTO will *sua sponte* issue a certificate of correction reflecting the amount of PTA days determined by the recalculation.

Prior to the issuance of the certificate of correction, the USPTO will afford patentee an opportunity to be heard and request reconsideration. Accordingly, patentee has **one month or thirty (30) days**, whichever is longer, to file a request for reconsideration of this patent term adjustment calculation. See 35 U.S.C. 154(b)(3)(B)(ii) and 37 CFR 1.322(a)(4). No extensions of time will be granted under 37 CFR 1.136.

Patentee should use document code PET.OP if electronically filing a request for reconsideration of this patent term adjustment calculation. The patentee must also include the information required by 37 CFR 1.705(b)(2) and the fee required by 37 CFR 1.18(e). If patentee does not file a timely request for reconsideration of this patent term adjustment calculation including the information required by 37 CFR 1.705(b)(2) and the fee required by 37 CFR 1.18(e), the USPTO will issue a certificate of correction reflecting the PTA determination noted above.

Patentee should be aware that in order to preserve the right to review in the United States District Court for the District of Columbia of the USPTO patent term adjustment determination, patentee must ensure that he or she also take the steps required under 35 U.S.C. 154(b)(4)(A) in a timely manner. Nothing in the request for recalculation should be construed as providing an alternative time frame for commencing a civil action under 35 U.S.C. 154(b)(4)(A).

Any questions concerning this decision should be directed to the Office of Patent Legal Administration at 571-272-7702.

UNITED STATES PATENT AND TRADEMARK OFFICE

UNITED STATES DEPARTMENT OF COMMERCE
United States Patent and Trademark Office
Address: COMMISSIONER FOR PATENTS
P.O. Box 1450
Alexandria, Virginia 22313-1450
www.uspto.gov

FULBRIGHT & JAWORSKI L.L.P.
600 CONGRESS AVE.
SUITE 2400
AUSTIN, TX 78701

Mail Date: 04/21/2010

Applicant	: Thomas Spies	: DECISION ON REQUEST FOR
Patent Number	: 7666417	: RECALCULATION of PATENT
Issue Date	: 02/23/2010	: TERM ADJUSTMENT IN VIEW
Appliction No	: 10/898,003	: OF WYETH AND NOTICE OF INTENT TO
Filed	: 07/23/2004	: ISSUE CERTIFICATE OF CORRECTION
		:

The Request for Recalculation is **GRANTED** to the extent indicated.

The patent term adjustment has been determined to be **381** days. The USPTO will *sua sponte* issue a certificate of correction reflecting the amount of PTA days determined by the recalculation.

Prior to the issuance of the certificate of correction, the USPTO will afford patentee an opportunity to be heard and request reconsideration. Accordingly, patentee has **one month or thirty (30) days**, whichever is longer, to file a request for reconsideration of this patent term adjustment calculation. See 35 U.S.C. 154(b)(3)(B)(ii) and 37 CFR 1.322(a)(4). No extensions of time will be granted under 37 CFR 1.136.

Patentee should use document code PET.OP if electronically filing a request for reconsideration of this patent term adjustment calculation. The patentee must also include the information required by 37 CFR 1.705(b)(2) and the fee required by 37 CFR 1.18(e). If patentee does not file a timely request for reconsideration of this patent term adjustment calculation including the information required by 37 CFR 1.705(b)(2) and the fee required by 37 CFR 1.18(e), the USPTO will issue a certificate of correction reflecting the PTA determination noted above.

Patentee should be aware that in order to preserve the right to review in the United States District Court for the District of Columbia of the USPTO patent term adjustment determination, patentee must ensure that he or she also take the steps required under 35 U.S.C. 154(b)(4)(A) in a timely manner. Nothing in the request for recalculation should be construed as providing an alternative time frame for commencing a civil action under 35 U.S.C. 154(b)(4)(A).

Any questions concerning this decision should be directed to the Office of Patent Legal Administration at 571-272-7702.

UNITED STATES PATENT AND TRADEMARK OFFICE

Commissioner for Patents
United States Patent and Trademark Office
P.O. Box 1450
Alexandria, VA 22313-1450
www.uspto.gov

DLA PIPER US LLP
1999 AVENUE OF THE STARS
SUITE 400
LOS ANGELES CA 90067-6023

COPY MAILED

SEP 29 2008

OFFICE OF PETITIONS

In re Application of	:	
Washburn, et al.	:	
Application No. 10/898,006	:	DECISION
Filed: 23 July, 2004	:	
Attorney Docket No. 364775-11	:	

This is a decision on the petition, filed on 16 May, 2008, and supplemented on 24 September, 2008, considered as a petition under 37 C.F.R. §1.137(b) to revive the application as having been abandoned due to unintentional delay.

The petition under 37 C.F.R. §1.137(b) is **GRANTED**.

As to Allegations of
Unintentional Delay

The requirements of a grantable petition pursuant to 37 C.F.R. §1.137(b) are the petition and fee therefor, a reply, a proper statement of unintentional delay under the regulation, and, where applicable, a terminal disclaimer and fee. (However, it does not appear that a terminal disclaimer and fee are due here.)

BACKGROUND

The record reflects as follows:

Petitioner failed to reply timely and properly to the final Office action mailed on 5 June, 2006; with reply due absent extension of time on or before 5 September, 2006.

The application went abandoned by operation of law after midnight 5 September, 2006.

The Office mailed the Notice of Abandonment on 30 January, 2007.

On 16 May, 2008, 2008, Petitioner filed the instant petition with fee, and a reply in the form of an amendment after final—which Petitioner, as one registered to practice before the Office, is aware is not of right and was not a proper reply[1]—and made the statement of unintentional delay. Thereafter, on 24 September, 2008, Petitioner supplemented his petition and reply with a request for continued examination (RCE) and fee and a submission under the provisions of 37 C.F.R. §1.114 in the form of the previously filed amendment.

The record (including the petition filed on 16 May, 2008, and supplemented on 24 September, 2008) does not necessitate a finding that the delay between midnight 5 September, 2006 (the date of abandonment), and 16 May, 2008 (with supplement of 24 September, 2008) (the date of filing of grantable petition), was not unintentional.

Rather, the Patent and Trademark Office is relying in this matter on the duty of candor and good faith of Petitioner/ Counsel J.D. Harriman II (Reg. No. 31,967) when accepting Petitioner's representation that the delay in filing the response was unintentional.[2]

Out of an abundance of caution, Petitioners always are reminded that those registered to practice and all others who make representations before the Office are reminded to inquire into the underlying facts of representations made to the Office and support averments with the appropriate documentation–since all owe to the Office the continuing duty to disclose.[3]

The availability of applications and application papers online to applicants/practitioners who diligently associate their Customer Number with the respective application(s) now provides an applicant/practitioner on-demand information as to events/transactions in an application.

As to Allegations of
Unintentional Delay

The requirements under 37 C.F.R. §1.137(b) have been satisfied.

CONCLUSION

Accordingly, The petition under 37 C.F.R. §1.137(b) is **granted**.

---

[1] A proper reply is an amendment *prima facie* placing the application in condition for allowance, a Notice of Appeal, or an RCE (with fee and submission under 37 C.F.R. §1.114). (See: MPEP §711.03(c).)

[2] *See:* Changes to Patent Practice and Procedure, 62 Fed. Reg. at 53160 and 53178, 1203 Off. Gaz. Pat. Office at 88 and 103 (responses to comments 64 and 109)(applicant obligated under 37 C.F.R. §10.18 to inquire into the underlying facts and circumstances when providing the statement required by 37 C.F.R. §1.137(b) to the Patent and Trademark Office).

[3] See supplement of 17 June, 1999. The Patent and Trademark Office is relying on Petitioner's duty of candor and good faith and accepting a statement made by Petitioner. See Changes to Patent Practice and Procedure, 62 Fed. Reg. at 53160 and 53178, 1203 Off. Gaz. Pat. Office at 88 and 103 (responses to comments 64 and 109)(applicant obligated under 37 C.F.R. §10.18 to inquire into the underlying facts and circumstances when providing statements to the Patent and Trademark Office).

The instant application is released to Technology Center/AU 2819 for further processing in due course.

Petitioner may find it beneficial to view Private PAIR within a fortnight of the instant decision to ensure that the revival has been acknowledged by the Technology Center/AU in response to this decision. It is noted that all inquiries with regard to that change in status need be directed to the Technology Center/AU where that change of status must be effected—that does not occur in the Office of Petitions.

While telephone inquiries regarding this decision may be directed to the undersigned at (571) 272-3214, it is noted that all practice before the Office is in writing (see: 37 C.F.R. §1.2[4]) and the proper authority for action on any matter in this regard are the statutes (35 U.S.C.), regulations (37 C.F.R.) and the commentary on policy (MPEP). Therefore, no telephone discussion may be controlling or considered authority for Petitioner's action(s).

/John J. Gillon, Jr./
John J. Gillon, Jr.
Senior Attorney
Office of Petitions

[4] The regulations at 37 C.F.R. §1.2 provide:
§1.2 Business to be transacted in writing.
All business with the Patent and Trademark Office should be transacted in writing. The personal attendance of applicants or their attorneys or agents at the Patent and Trademark Office is unnecessary. The action of the Patent and Trademark Office will be based exclusively on the written record in the Office. No attention will be paid to any alleged oral promise, stipulation, or understanding in relation to which there is disagreement or doubt.

UNITED STATES PATENT AND TRADEMARK OFFICE

Commissioner for Patents
United States Patent and Trademark Office
P.O. Box 1450
Alexandria, VA 22313-1450
www.uspto.gov

IPSG, P.C.
P.O. BOX 700640
SAN JOSE CA 95170-0640

COPY MAILED

JAN 19 2007

OFFICE OF PETITIONS

In re Application of	:	
Hass et al.	:	DECISION ON PETITION
Application No. 10/898,007	:	TO WITHDRAW
Filed: July 23, 2004	:	FROM RECORD
Attorney Docket No. RZMI-P103	:	

This is a decision on the request to withdraw as attorney of record under 37 C.F.R. § 1.36, filed August 1, 2006.

The request is **NOT APPROVED**.

A grantable request to withdraw as attorney of record must be signed by every attorney seeking to withdraw or contain a clear indication that one attorney is signing on behalf of another/others. A request to withdraw will not be approved unless at least 30 (thirty) days would remain between the date of approval and the later of the expiration date of a time to file a response or the expiration date of the maximum time period which can be extended under 37 C.F.R. § 1.136(a).

The Office cannot approve the request at this time since the reason provided do not meet any of the conditions under the mandatory or permissive categories enumerated in 37 CFR 10.40. Section 10.40 of Title 37 of the Code of Federal Regulation states, "[a] practitioner shall not withdraw from employment in a proceeding before the Office without permission from the Office[.]" More specifically, 37 CFR 10.40 states, "[i]f paragraph (b) of this section is not applicable, a practitioner may not request permission to withdraw in matter pending before the Office unless such request or such withdrawal is" for one the permissive reasons listed in 37 CFR 10.40(c). The reasons set forth in the request, "The Assignee Raza Microelectronics, Inc. wishes to terminate representation," does not meet any the conditions set forth in 37 CFR 10.40 since a proper Statement under 37 CFR 3.73(b) has not be submitted.

For the same reason listed above, the Revocation of Power of Attorney submitted by the Assignee on December 5, 2006 is hereby not approved. The Notice of Acceptance of Power of Attorney mailed December 21, 2005, was mailed in error and is hereby withdrawn. 37 CFR 3.73(b) provides that: (1) when an assignee seeks to take action in a matter before the Office, the assignee must establish its ownership of the property to the satisfaction of the Commissioner; (2) ownership is established by submitting to the Office, in the Office file related to the matter in which action is sought to be taken, documentary evidence of a chain of title from the original owner to the assignee (*e.g.*, copy of an executed assignment submitted for recording) or by specifying (*e.g.*, reel and frame number) where such evidence is recorded in the Office; (3) the submission establishing ownership must be signed by a party authorized to act on behalf of the assignee; and (4) documents submitted to establish ownership may be required to be recorded as a condition to permitting the assignee to take action in a matter pending before the Office.

All future communications from the Office will continue to be directed to the above-listed address until otherwise properly notified.

Telephone inquires concerning this decision should be directed to the undersigned at 571-272-3206.

Liana Walsh
Petitions Examiner
Office of Petitions

Cc:

RAZA MICROELECTRONICS, INC.
LEGAL DEPARTMENT
18920 FORGE DRIVE
CUPERTINO, CA 95014-0701

STEVENS LAW GROUP P.C.
P. O. BOX 1667
SAN JOSE, CA 95107

UNITED STATES PATENT AND TRADEMARK OFFICE

Commissioner for Patents
United States Patent and Trademark Office
P.O. Box 1450
Alexandria, VA 22313-1450
www.uspto.go

STEVENS LAW GROUP
P.O. BOX 1667
SAN JOSE CA 95109

COPY MAILED

JUN 15 2007

OFFICE OF PETITIONS

In re Application of
Hess et al.
Application No. 10/898,007
Filed: July 23, 2004
Attorney Docket No. RZMI-P103

DECISION ON PETITION

This is a decision on the petition under 37 CFR 1.137(b), filed April 17, 2007, to revive the above-identified application.

This above-identified application became abandoned for failure to timely file a reply to a non-final Office Action mailed July 21, 2006. The non-final Office Action set a three (3) month shortened statutory period for reply. No extensions of time were obtained under the provisions of 37 CFR 1.136(a). Accordingly, this application became abandoned on October 22, 2006. A Notice of Abandonment was mailed on April 4, 2007.

This petition is hereby **GRANTED**.

The Office hereby acknowledges the receipt of the amendment submitted on with the instant petition.

This application is being forwarded to Technology Center 2100 for further processing.

Telephone inquiries concerning this matter should be directed to the undersigned at (571) 272-3215.

Charlema R. Grant

Charlema R. Grant
Petitions Attorney
Office of Petitions

UNITED STATES PATENT AND TRADEMARK OFFICE

Commissioner for Patents
United States Patent and Trademark Office
P.O. Box 1450
Alexandria, VA 22313-1450
www.uspto.gov

IPSG, P.C.
P.O. BOX 700640
SAN JOSE CA 95170-0640

COPY MAILED

JAN 19 2007

OFFICE OF PETITIONS

In re Application of	:	DECISION ON PETITION
Hass et al.	:	TO WITHDRAW
Application No. 10/898,008	:	FROM RECORD
Filed: July 23, 2004	:	
Attorney Docket No. RZMI-P102	:	

This is a decision on the request to withdraw as attorney of record under 37 C.F.R. § 1.36, filed August 1, 2006.

The request is **NOT APPROVED**.

A grantable request to withdraw as attorney of record must be signed by every attorney seeking to withdraw or contain a clear indication that one attorney is signing on behalf of another/others. A request to withdraw will not be approved unless at least 30 (thirty) days would remain between the date of approval and the later of the expiration date of a time to file a response or the expiration date of the maximum time period which can be extended under 37 C.F.R. § 1.136(a).

The Office cannot approve the request at this time since the reason provided do not meet any of the conditions under the mandatory or permissive categories enumerated in 37 CFR 10.40. Section 10.40 of Title 37 of the Code of Federal Regulation states, "[a] practitioner shall not withdraw from employment in a proceeding before the Office without permission from the Office[.]" More specifically, 37 CFR 10.40 states, "[i]f paragraph (b) of this section is not applicable, a practitioner may not request permission to withdraw in matter pending before the Office unless such request or such withdrawal is" for one the permissive reasons listed in 37 CFR 10.40(c). The reasons set forth in the request, "The Assignee Raza Microelectronics, Inc. wishes to terminate representation," does not meet any the conditions set forth in 37 CFR 10.40 since a proper Statement under 37 CFR 3.73(b) has not be submitted.

37 CFR 3.73(b) provides that: (1) when an assignee seeks to take action in a matter before the Office, the assignee must establish its ownership of the property to the satisfaction of the Commissioner; (2) ownership is established by submitting to the Office, in the Office file related to the matter in which action is sought to be taken, documentary evidence of a chain of title from the original owner to the assignee (*e.g.*, copy of an executed assignment submitted for recording) or by specifying (*e.g.*, reel and frame number) where such evidence is recorded in the Office; (3) the submission establishing ownership must be signed by a party authorized to act on behalf of the assignee; and (4) documents submitted to establish ownership may be required to be recorded as a condition to permitting the assignee to take action in a matter pending before the Office.

All future communications from the Office will continue to be directed to the above-listed address until otherwise notified by applicant.

Telephone inquires concerning this decision should be directed to the undersigned at 571-272-3206.

Liana Walsh
Petitions Examiner
Office of Petitions

Cc:

RAZA MICROELECTRONICS, INC.
LEGAL DEPARTMENT
18920 FORGE DRIVE
CUPERTINO, CA 95014-0701

UNITED STATES PATENT AND TRADEMARK OFFICE

COMMISSIONER FOR PATENTS
UNITED STATES PATENT AND TRADEMARK OFFICE
P.O. BOX 1450
ALEXANDRIA, VA 22313-1450
www.uspto.gov

MAIL

MAY 18 2005

DIRECTOR OFFICE
TECHNOLOGY CENTER 2600

Louis M. Heidelberger
Reed Smith LLP
2500 One Liberty Place
Philadelphia, PA 19103-7301

In re Application of :
Ryan Steelberg, et al. :
Application No. 10/898,011 :
Filed: July 23, 2004 :
For: DYNAMIC CREATION, SELECTION, AND SCHEDULING OF RADIO FREQUENCY COMMUNICATIONS :

DECISION ON PETITION TO MAKE SPECIAL

This is a decision on the petition filed April 15, 2005, under 37 CFR §1.102(d) to make the application special and treated as pursuant to MPEP §708.02, section II (Infringement).

A grantable petition under 37 CFR §1.102(d) and MPEP §708.02, section II (Infringement), must be accompanied by the required fee and a statement alleging:

(1) that there is an infringing device or product actually on the market or method in use;
(2) that a rigid comparison of the alleged infringing device, product, or method with the claims of the application has been made, and that, in his or her opinion, some of the claims are unquestionably infringed; and
(3) that he or she has made or caused to be made a careful and thorough search of the prior art or has a good knowledge of the pertinent prior art. Further, Applicant must provide a copy of each of the references deemed most closely related to the subject matter encompassed by the claims if the references are not already of record.

The petitioner meets all the above-listed requirements. Accordingly, the petition is **GRANTED**.

The application will retain its special status throughout its entire prosecution, including any appeal to the Board of Patent Appeals and Interferences, subject only to diligent prosecution by the applicant.

The application is being forwarded to the examiner for expedited prosecution.

Krista Zele
Special Program Examiner
Technology Center 2600
Communications

UNITED STATES PATENT AND TRADEMARK OFFICE

Commissioner for Patents
United States Patent and Trademark Office
P.O. Box 1450
Alexandria, VA 22313-1450
www.uspto.gov

KAGAN BINDER, PLLC
SUITE 200, MAPLE ISLAND BUILDING
221 MAIN STREET NORTH
STILLWATER MN 55082

COPY MAILED

JUL 31 2009

OFFICE OF PETITIONS

In re Application of	:	
Kevin Stepka	:	
Application No. 10/898,014	:	DECISION ON PETITION
Filed: July 21, 2004	:	
Attorney Docket No. STP0002/US	:	

This is a decision on the petition, filed June 22, 2009, which is being treated as a petition under 37 CFR 1.181 (no fee) requesting withdrawal of the holding of abandonment in the above-identified application.

The petition is **GRANTED**.

This application was held abandoned for failure to reply to the decision by the Board of Patent Appeals and Interferences rendered on March 31, 2009, which set a two (2) month shortened statutory period for reply. A Notice of Abandonment was mailed on June 11, 2009.

Petitioner contends that the Notice of Abandonment was mailed in error since a timely reply was submitted with a Certificate of Mailing on June 1, 2008 (May 30, 2009 falling on a Saturday), which included the following papers: Request for Rehearing. A review of the application file record confirms the receipt of this reply received on June 9, 2009, with the Certificate of Mailing dated June 1, 2009.

In view of the above, the Notice of Abandonment is hereby **VACATED** and the holding of abandonment **WITHDRAWN**.

Telephone inquires concerning this decision should be directed to JoAnne Burke at 571-272-4584.

This application is being referred to the Board of Patent Appeals and Interferences for appropriate action in the normal course of business on the reply received June 9, 2009.

Ramesh Krishnamurthy

Ramesh Krishnamurthy
Petitions Examiner
Office of Petitions

UNITED STATES PATENT AND TRADEMARK OFFICE

Commissioner for Patents
United States Patent and Trademark Office
P.O. Box 1450
Alexandria, VA 22313-1450
www.uspto.gov

OCT 11 2005

REED SMITH LLP
2500 ONE LIBERTY PLACE
1650 MARKET STREET
PHILADELPHIA, PA 19003-7301

In re application of Ryan Steelberg, et al. Application No. 10/898,022 Filed: July 23, 2004 For: DYNAMIC SELECTION AND SCHEDULING OF RADIO AND FREQUENCY COMMUNICATIONS	: : : :	**DECISION ON PETITION TO MAKE SPECIAL (INFRINGEMENT)**

This is a decision on the petition under 37 C.F.R § 1.102(d) filed April 15, 2005 to make the above-identified application special. The petition requests that the above-identified application be made special under the procedure set forth in M.P.E.P. § 708.02, item II: Infringement.

MPEP 708.02 states that a Petition to Make Special based on Infringement must have the following: (1) the appropriate petition fee under 37 CFR 1.17(h); (2) a statement by the assignee, applicant, or attorney alleging: (A) that there is an infringing device or product actually on the market or method in use; (B) that a rigid comparison of the alleged infringing device, product or method with the claims of the application has been made, and that, in his or her opinion, some of the claims are unquestionably infringed; and (C) that he or she has made a careful and thorough search of the prior art, or has good knowledge of the prior art, and has sent a copy of the references deemed most closely related to the subject matter encompassed by the claims.

The petition filed April 15, 2005 lacks requirements 1 above.

Regarding item 1, the petition does not include the appropriate petition fee under 37 CFR 1.17(i). The petition will not be treated on the merits until the fee is paid.

In view of this deficiency, the petition is **DISMISSED**.

Any request for reconsideration must be filed within TWO MONTHS of the date of this decision. Extensions of time under 37 CFR 1.136(a) are permitted. Should petitioner desire reconsideration, he should supplement this petition by a declaration or statement giving the information as outlined above.

Applicant should promptly submit a renewed petition to the Commissioner for Patents, P.O. Box 1450, Alexandria, VA 22313-1450. The envelope should indicate that the correspondence be brought to the attention of Technology Center 3600.

Until the renewed petition is submitted, the application will be returned to the examiner's docket to await treatment on the merits in the normal order of examination.

Kenneth J. Dorner
Special Programs Examiner
Technology Center 3600
(571) 272-6587

KJD/slb: 10/03/05

UNITED STATES PATENT AND TRADEMARK OFFICE

MAILED
FROM DIRECTORS OFFICE

APR 1 0 2006

TECHNOLOGY CENTER 3600

Commissioner for Patents
United States Patent and Trademark Office
P.O. Box 1450
Alexandria, VA 22313-1450
www.uspto.gov

REED SMITH LLP
2500 ONE LIBERTY PLACE
1650 MARKET STREET
PHILADELPHIA, PA 19003-7301

In re application of Ryan Steelberg, et al. Application No. 10/898,022 Filed: July 23, 2004 For: DYNAMIC SELECTION AND SCHEDULING OF RADIO AND FREQUENCY COMMUNICATIONS	: : : :	**DECISION ON PETITION TO MAKE SPECIAL (INFRINGEMENT)**

This is a decision on the petition under 37 C.F.R § 1.102(d) filed April 15, 2005 to make the above-identified application special.

The petition requests that the above-identified application be made special under the procedure set forth in M.P.E.P. § 708.02, item II: Infringement.

MPEP 708.02 states that a Petition to Make Special based on Infringement must have the following: (1) the appropriate petition fee under 37 CFR 1.17(i); (2) a statement by the assignee, applicant, or attorney alleging: (A) that there is an infringing device or product actually on the market or method in use; (B) that a rigid comparison of the alleged infringing device, product or method with the claims of the application has been made, and that, in his or her opinion, some of the claims are unquestionably infringed; and (C) that he or she has made a careful and thorough search of the prior art, or has good knowledge of the prior art, and has sent a copy of the references deemed most closely related to the subject matter encompassed by the claims.

The petition filed April 15, 2005 meets all of the requirements above and, therefore, the petition is **GRANTED**.

With regards to element 2(C) above, an Information Disclosure Statement was filed on April 15, 2005.

The examiner is directed (1) to make an interference search for possible interfering applications; (2) to promptly examine this application out of turn; and (3) if any interfering application is discovered, to examine such application simultaneously and state in the first official letter of such application that it is being taken out of turn because of a possible interference.

Petitioner is advised that this application will continue to be special, throughout its entire prosecution and pendency, including interference and appeal, if any, only if petitioner makes a prompt *bona fide* effort, in response to each Office action, to place the application in condition for allowance, even if it is necessary to conduct an interview with the examiner to accomplish this purpose.

Randolph A. Reese
Special Programs Examiner
Technology Center 3600
(571) 272-6619

RAR/slb: 01/04/06

0 4 FEB 2009

UNITED STATES PATENT AND TRADEMARK OFFICE

Commissioner for Patents
United States Patent and Trademark Office
P.O. Box 1450
Alexandria, VA 22313-1450
www.uspto.gov

Fish & Richardson P.C.
PO Box 1022
Minneapolis, MN 55440-1022

In re Application of :
STEELBERG et al. :
Application No.: 10/898,022 :
Filed: 07-23-2004 : DECISION ON PETITION
Attorney Docket No.:16113-1173001/. . . . :
For: DYNAMIC SELECTION AND :
SCHEDULING OF RADIO FREQUENCY :
COMMUNICATIONS

This decision is in response to applicant's "Petition to Accept Priority Claim" dated January 15, 2009, requesting acceptance of an unintentionally delayed claim for priority under 35 U.S.C. 365(c) and 37 CFR 1.78(a)(3) to international application PCT/US02/04769. Because the international application claims priority to a prior filed provisional application, the petition is being treated as a petition under 37 CFR 1.78(a)(6) to accept an unintentionally delayed claim under 35 U.S.C. §119(e) for the benefit of the prior-filed provisional application.

The petition under 37 CFR 1.78(a)(3) and 37 CFR 1.78(a)(6) is **DISMISSED** without prejudice.

The present nonprovisional application was filed after November 29, 2000, and the claim herein for the benefit of priority to the prior-filed applications is submitted after expiration of the period specified in 37 CFR 1.78(a)(2)(ii). Therefore, this is a proper petition under 37 CFR 1.78(a)(3) and 37 CFR 1.78(a)(6).

A petition for acceptance of a claim for late priority under 37 CFR 1.78(a)(3) and (a)(6) is only applicable to those applications filed on or after November 29, 2000. Further, the petition is appropriate only after the expiration of the period specified in 37 CFR 1.78(a)(2)(ii). In addition, the petition under 37 CFR 1.78(a)(3) must be accompanied by:

(1) the reference required by 35 U.S.C. § 120 and 37 CFR 1.78(a)(2)(i) of the prior-filed application, unless previously submitted;
(2) the surcharge set forth in § 1.17(t); and
(3) a statement that the entire delay between the date the

> claim was due under 37 CFR 1.78(a)(2)(ii) and the date the claim was filed was unintentional. The Director may require additional information where there is a question whether the delay was unintentional.

The petition was accompanied by item (2).

As to item (1), the petition does not comply with the requirements for a grantable petition under 37 CFR §§1.78(a)(3), in that, a proper reference to the prior-filed applications has not been included in an amendment to the first sentence of the specification following the title or in an Application Data Sheet, as provided by 37 CFR §§ 1.78(a)(2)(iii).

Further, applicant has not provided a statement that the entire delay between the date the claim was due under 37 CFR 1.78(a)(2)(ii) and the date the claim was filed was unintentional. Item (3) has not been satisfied.

Therefore, before the petition under 37 CFR § 1.78(a)(3) and (a)(6) can be granted, a renewed petition and either an Application Data Sheet (37 CFR 1.76(a)(5)) or a proper amendment (complying with the provisions of 37 CFR 1.121) to correct the above matters <u>and</u> a statement that the entire delay between the date the claim was due under 37 CFR 1.78(a)(2)(ii) and the date the claim was filed was unintentional are required.

Further correspondence with respect to this matter should be addressed as follows:

By mail: Mail Stop PCT
Commissioner for Patents
Post Office Box 1450
Alexandria, VA 22313-1450

By hand: Customer Service Window
Mail Stop PCT
Randolph Building
401 Dulany Street
Alexandria, VA 22314

By fax: (571) 273-8300
ATTN: Office of PCT Legal Adminstration

Any questions concerning this matter may be directed to Anthony Smith at (571) 272-3298.

Boris Milef
Legal Examiner
PCT Legal Administration

UNITED STATES PATENT AND TRADEMARK OFFICE

Commissioner for Patents
United States Patent and Trademark Office
P.O. Box 1450
Alexandria, VA 22313-1450
www.uspto.gov

13 MAR 2009

Fish & Richardson P.C.
PO Box 1022
Minneapolis, MN 55440-1022

In re Application of
STEELBERG et al.
Application No.: 10/898,022
Filed: 07-23-2004
Attorney Docket No.:16113-1173001/. . . .
For: DYNAMIC SELECTION AND SCHEDULING OF RADIO FREQUENCY COMMUNICATIONS

DECISION ON PETITION

This decision is in response to applicant's "Renewed Petition to Accept Priority Claim Reply to Decision on Petition dated February 4, 2009" dated February 24, 2009, requesting acceptance of an unintentionally delayed claim for priority under 35 U.S.C. 365(c) and 37 CFR 1.78(a)(3) to international application PCT/US02/04769. Because the international application claims priority to a prior filed provisional application, the petition is being treated as a petition under 37 CFR 1.78(a)(6) to accept an unintentionally delayed claim under 35 U.S.C. §119(e) for the benefit of the prior-filed provisional application.

The petitions are **GRANTED**.

The present nonprovisional application was filed after November 29, 2000, and the claim herein for the benefit of priority to the prior-filed nonprovisional applications is submitted after expiration of the period specified in 37 CFR 1.78(a)(2)(ii) and 1.78(a)(5)(ii). Therefore, this is a proper petition under 37 CFR 1.78(a)(3) and 1.78(a)(6).

A petition for acceptance of a claim for late priority under 37 CFR §§ 1.78(a)(3) and 1.78(a)(6) is only applicable to those applications filed on or after November 29, 2000. Further, the petition is appropriate only after the expiration of the period specified in 37 CFR §§ 1.78(a)(2)(ii) and 1.78(a)(5)(ii). In addition, the petition under 37 CFR §§ 1.78(a)(3) and 1.78(a)(6) must be accompanied by:

(1) the reference required by 35 U.S.C. §§ 120 and 119(e) and 37 CFR §§ 1.78(a)(2)(i) and 1.78(a)(5)(i) of the prior-filed application, unless previously submitted;
(2) the surcharge set forth in § 1.17(t); and
(3) a statement that the entire delay between the date the claim was due under 37 CFR §§ 1.78(a)(2)(ii) and 1.78(a)(5)(ii) and the date

> the claim was filed was unintentional. The Director may require additional where there is a question whether the delay was unintentional.

The petition complies with the requirements for a grantable petition under 37 CFR §§1.78(a)(3) and 1.78(a)(6) in that (1) a proper reference to the prior-filed applications has been included in an amendment to the first sentence of the specification, as provided by 37 CFR §§ 1.78(a)(2)(iii) and 1.78(a)(5)(iii); (2) the surcharge fee required by 37 CFR 1.17(t) has been submitted; and (3) the petition contains a proper statement of unintentional delay. Accordingly, having found that the petition for acceptance of an unintentionally delayed claim for the benefit of priority under 35 U.S.C. §§ 120 and 119(e) to the prior-filed applications satisfies the conditions of 37 CFR §§ 1.78(a)(3) and 1.78(a)(6), the petition is granted.

The granting of the petition to accept the delayed benefit claim to the prior-filed applications under 37 CFR §§ 1.78(a)(3) and 1.78(a)(6) should not be construed as meaning that this application is entitled to the benefit of the filing date of the prior-filed applications. In order for this application to be entitled to the benefit of the prior-filed applications, all other requirements under 35 U.S.C. §§120 and 365(c) and 1.78(a)(1) and (a)(2) and under 35 U.S.C. §119(e) and 37 CFR 1.78(a)(4) and (a)(5) must be met. Similarly, the fact that the corrected Filing Receipt accompanying this decision on petition includes the prior-filed applications should not be construed as meaning that applicant is entitled to the claim for benefit of priority to the prior-filed applications noted thereon. Accordingly, the examiner will, in due course, consider this benefit claim and determine whether this application is entitled to the benefit of the earlier filing date.

A corrected Filing Receipt, which includes the priority claim to the prior-filed applications, accompanies this decision on petition. Any questions concerning this matter may be directed to Anthony Smith at (571) 272-3296. All other inquiries concerning either the examination procedures or status of the application should be directed to the Technology Center.

This matter is being referred to Technology Center Art Unit 2618 for appropriate action on the amendment submitted February 24, 2009, including consideration by the examiner of the claim for benefit of the prior-filed applications.

Bryan Lin

Bryan Lin
Legal Examiner
PCT Legal Administration

UNITED STATES PATENT AND TRADEMARK OFFICE

UNITED STATES DEPARTMENT OF COMMERCE
United States Patent and Trademark Office
Address: COMMISSIONER FOR PATENTS
P.O. Box 1450
Alexandria, Virginia 22313-1450
www.uspto.gov

FISH & RICHARDSON P.C.
PO BOX 1022
MINNEAPOLIS, MN 55440-1022

Mail Date: 04/20/2010

Applicant	: Ryan Steelberg	: DECISION ON REQUEST FOR
Patent Number	: 7647038	: RECALCULATION of PATENT
Issue Date	: 01/12/2010	: TERM ADJUSTMENT IN VIEW
Appliction No	: 10/898,022	: OF WYETH AND NOTICE OF INTENT TO
Filed	: 07/23/2004	: ISSUE CERTIFICATE OF CORRECTION
		:

The Request for Recalculation is **GRANTED** to the extent indicated.

The patent term adjustment has been determined to be **1413** days. The USPTO will *sua sponte* issue a certificate of correction reflecting the amount of PTA days determined by the recalculation.

Prior to the issuance of the certificate of correction, the USPTO will afford patentee an opportunity to be heard and request reconsideration. Accordingly, patentee has **one month or thirty (30) days**, whichever is longer, to file a request for reconsideration of this patent term adjustment calculation. See 35 U.S.C. 154(b)(3)(B)(ii) and 37 CFR 1.322(a)(4). No extensions of time will be granted under 37 CFR 1.136.

Patentee should use document code PET.OP if electronically filing a request for reconsideration of this patent term adjustment calculation. The patentee must also include the information required by 37 CFR 1.705(b)(2) and the fee required by 37 CFR 1.18(e). If patentee does not file a timely request for reconsideration of this patent term adjustment calculation including the information required by 37 CFR 1.705(b)(2) and the fee required by 37 CFR 1.18(e), the USPTO will issue a certificate of correction reflecting the PTA determination noted above.

Patentee should be aware that in order to preserve the right to review in the United States District Court for the District of Columbia of the USPTO patent term adjustment determination, patentee must ensure that he or she also take the steps required under 35 U.S.C. 154(b)(4)(A) in a timely manner. Nothing in the request for recalculation should be construed as providing an alternative time frame for commencing a civil action under 35 U.S.C. 154(b)(4)(A).

Any questions concerning this decision should be directed to the Office of Patent Legal Administration at 571-272-7702.

UNITED STATES PATENT AND TRADEMARK OFFICE

UNITED STATES DEPARTMENT OF COMMERCE
United States Patent and Trademark Office
Address: COMMISSIONER FOR PATENTS
P.O. Box 1450
Alexandria, Virginia 22313-1450
www.uspto.gov

FISH & RICHARDSON P.C.
PO BOX 1022
MINNEAPOLIS, MN 55440-1022

Mail Date: 05/17/2010

Applicant : Ryan Steelberg
Patent Number : 7647038
Issue Date : 01/12/2010
Application No : 10/898,022
Filed : 07/23/2004

: NOTICE CONCERNING IMPROPER
: CALCULATION OF PATENT TERM
: ADJUSTMENT BASED UPON USPTO
: IMPROPERLY MEASURING REDUCTION
: PERIOD UNDER 37 CFR 1.704(c)(10).

The United States Patent and Trademark Office (USPTO) discovered that in processing the recent recalculation decisions mailed in response to patentee's filed Request for Recalculation of Patent Term Adjustment in view of Wyeth, the USPTO improperly measured the reduction period for reductions under 37 CFR 1.704(c)(10). Pursuant to 37 CFR 1.704(c)(10), patentee's reduction begins on the date of filing the amendment under 37 CFR 1.312 ("1.312 amendment") or other related paper and ends on the date that the Office mails a response to the filing of the 1.312 amendment or other paper. It has been discovered that during the recalculation, the calculation failed to the limit the reduction to the mail date of the response to the 1.312 amendment or other paper. Accordingly, patentee's reductions were greater than warranted.

This notice **VACATES** the previous GRANTED request for recalculation and provides patentee with a revised GRANTED recalculation.

The patent term adjustment has been determined to be **1454** days. The USPTO will *sua sponte* issue a certificate of correction reflecting the amount of patent term adjustment (PTA) days determined by the recalculation.

Prior to the issuance of the certificate of correction, the USPTO will afford patentee an opportunity to be heard and request reconsideration. Accordingly, patentee has **one month or thirty (30) days** from the mail date of this notice, whichever is longer, to file a request for reconsideration of this PTA calculation. See 35 U.S.C. § 154(b)(3)(B)(ii) and 37 CFR 1.322(a)(4).

Patentee should use document code PET.OP if electronically filing a request for reconsideration of this PTA calculation. The patentee must also include the information required by 37 CFR 1.705(b)(2), and the fee required by 37 CFR 1.18(e). If patentee does not file a timely request for reconsideration of this PTA calculation, including the information required by 37 CFR 1.705(b)(2) and the fee required by 37 CFR 1.18(e), the USPTO will issue a certificate of correction reflecting the PTA determination noted above.

Patentee should be aware that in order to preserve the right of review of the USPTO's PTA determination in the United States District Court for the District of Columbia, patentee must ensure that the steps required under 35 U.S.C. § 154 (b)(4) are taken in a timely manner. Nothing in the request for recalculation should be construed as providing an alternative time frame for commencing a civil action under 35 U.S.C. § 154(b)(4).

UNITED STATES PATENT AND TRADEMARK OFFICE

UNITED STATES DEPARTMENT OF COMMERCE
United States Patent and Trademark Office
Address: COMMISSIONER FOR PATENTS
P.O. Box 1450
Alexandria, Virginia 22313-1450
www.uspto.gov

Medtronic
Attn: Noreen C. Johnson, IP Legal Department
2600 Sofamor Danek Drive
Memphis, TN 38132

Mail Date: 04/21/2010

Applicant	: Marc M. Peterman	: DECISION ON REQUEST FOR
Patent Number	: 7594919	: RECALCULATION of PATENT
Issue Date	: 09/29/2009	: TERM ADJUSTMENT IN VIEW
Appliction No	: 10/898,032	: OF WYETH AND NOTICE OF INTENT TO
Filed	: 07/23/2004	: ISSUE CERTIFICATE OF CORRECTION
		:

The Request for Recalculation is **GRANTED** to the extent indicated.

The patent term adjustment has been determined to be **767** days. The USPTO will *sua sponte* issue a certificate of correction reflecting the amount of PTA days determined by the recalculation.

Prior to the issuance of the certificate of correction, the USPTO will afford patentee an opportunity to be heard and request reconsideration. Accordingly, patentee has **one month or thirty (30) days**, whichever is longer, to file a request for reconsideration of this patent term adjustment calculation. See 35 U.S.C. 154(b)(3)(B)(ii) and 37 CFR 1.322(a)(4). No extensions of time will be granted under 37 CFR 1.136.

Patentee should use document code PET.OP if electronically filing a request for reconsideration of this patent term adjustment calculation. The patentee must also include the information required by 37 CFR 1.705(b)(2) and the fee required by 37 CFR 1.18(e). If patentee does not file a timely request for reconsideration of this patent term adjustment calculation including the information required by 37 CFR 1.705(b)(2) and the fee required by 37 CFR 1.18(e), the USPTO will issue a certificate of correction reflecting the PTA determination noted above.

Patentee should be aware that in order to preserve the right to review in the United States District Court for the District of Columbia of the USPTO patent term adjustment determination, patentee must ensure that he or she also take the steps required under 35 U.S.C. 154(b)(4)(A) in a timely manner. Nothing in the request for recalculation should be construed as providing an alternative time frame for commencing a civil action under 35 U.S.C. 154(b)(4)(A).

Any questions concerning this decision should be directed to the Office of Patent Legal Administration at 571-272-7702.

UNITED STATES PATENT AND TRADEMARK OFFICE

Commissioner for Patents
United States Patent and Trademark Office
P.O. Box 1450
Alexandria, VA 22313-1450
www.uspto.gov

FISH & RICHARDSON P.C.
P.O BOX 1022
MINNEAPOLIS, MN 55440-1022

COPY MAILED

MAR 3 0 2007

OFFICE OF PETITIONS

In re Application of McMackin et al. Application No. 10/898,034 Filed: July 23, 2004 Attorney Docket No. 21554-054002/PA103-45D74	: : : : :	ON PETITION

This is a decision on the petition under 37 C.F.R. § 1.137(b), filed December 8, 2006, to revive the above-identified application.

The petition is **GRANTED.**

The petition satisfies the conditions for revival pursuant to the provisions of 37 CFR 1.137(b) in that (1) the reply in the form of an Amendment; (2) the petition fee; and (3) the required statement of unintentional delay have been received. Accordingly, the response has been accepted as having been unintentionally delayed.

This matter is being referred to Technology Center 1700 for further examination on the merits.

Telephone inquiries regarding this decision should be directed to the undersigned at (571) 272-3282.

Liana Walsh
Petitions Examiner
Office of Petitions

UNITED STATES PATENT AND TRADEMARK OFFICE

Commissioner for Patents
United States Patent and Trademark Office
P.O. Box 1450
Alexandria, VA 22313-1450
www.uspto.gov

FINNEGAN, HENDERSON, FARABOW, GARRETT & DUNNER LLP
901 NEW YORK AVENUE, NW
WASHINGTON DC 20001-4413

COPY MAILED

AUG 1 8 2008

OFFICE OF PETITIONS

In re Application of	:	
Masayuki HATTORI et al.	:	
Application No. 10/898,043	:	DECISION ON PETITION
Filed: July 22, 2004	:	
Attorney Docket No. **09812.0162-01000**	:	

This is a decision on the petition under the unintentional provisions of 37 CFR 1.137(b), filed December 11, 2007, to revive the above-identified application.

The petition is **GRANTED**.

The application became abandoned for failure to reply in a timely manner to the non-final Office action mailed, January 17, 2007, which set a shortened statutory period for reply of three (3) months. No extensions of time under the provisions of 37 CFR 1.136(a) were obtained. Accordingly, the application became abandoned on

The petition satisfies the requirements of 37 CFR 1.137(b) in that petitioner has supplied (1) the reply in the form of an amendment, (2) the petition fee of $1540, and (3) a proper statement of unintentional delay. Accordingly, the reply to the non-final Office action of January 17, 2007 is accepted as having been unintentionally delayed.

Telephone inquiries concerning this decision should be directed to Tredelle Jackson at (571) 272-2783.

This application is being referred to Technology Center AU 2112 for appropriate action on the concurrently filed amendment.

Ramesh Krishnamurthy

Ramesh Krishnamurthy
Petitions Examiner
Office of Petitions

OIPE IAP10
DEC 11 2007
PATENT & TRADEMARK OFFICE

12-13-07

PATENT
Attorney Docket No. 09812.0162-01

IN THE UNITED STATES PATENT AND TRADEMARK OFFICE

In re Application of:	
Masayuki HATTORI et al.	Group Art Unit: 2133
Application No.: 10/898,043	Examiner: Fritz Alphonse
Filed: July 22, 2004	Confirmation No. 4330
For: METHOD AND APPARATUS FOR REPRODUCING DATA AND METHOD AND APPARATUS FOR RECORDING AND/OR REPRODUCING DATA	

Mail Stop Petition
Commissioner for Patents
P.O. Box 1450
Alexandria, VA 22313-1450

Sir:

PETITION FOR REVIVAL OF AN UNINTENTIONALLY ABANDONED APPLICATION UNDER 37 CFR 1.137(B)

The above-identified application became abandoned in the United States for failing to respond to the non-final Office Action mailed January 17, 2007 ("Office Action"), within the statutory period of time for responding set forth in 37 C.F.R. § 1.134. The date of abandonment is July 18, 2007, the day after the statutory period for responding expired.

Applicants hereby petition for revival of this application.

12/13/2007 MBLANCO 00000022 060916 10898043
01 FC:1453 1540.00 DA

1. PETITION FEE

☐ Small entity - fee $750.00 (37 C.F.R. § 1.17(m))

☒ Other than small entity - fee $1,500.00 (37 C.F.R. § 1.17(m))

The Commissioner is authorized to charge the $1,500.00 fee to Deposit Account No. 06-0916.

2. PROPER REPLY

The proper reply, in the form of a Response under 37 C.F.R. § 1.111

☐ was filed on _____ .

☒ is enclosed herewith as a Request for Reconsideration.

3. TERMINAL DISCLAIMER WITH DISCLAIMER FEE

☒ Since this utility application was filed on or after June 8, 1995, no terminal disclaimer is required.

☐ A terminal disclaimer (and disclaimer fee (37 C.F.R. § 1.20(d)) of $____ for a small entity of $ ____ for other than a small entity) disclaiming the required period of time is enclosed herewith (see PTO/SB/63).

4. STATEMENT

The entire delay in filing a reply to the Office Action from the due date for the required reply until the filing of a grantable petition under 37 C.F.R. § 1.137(b) was unintentional.

Applicants filed a Change of Correspondence Address ("Change of Address") along with a Submission of Revocation of Original Power of Attorney and Grant of New Power of Attorney in the U.S. Patent and Trademark Office ("Office") on August 24, 2005. However, the Office did not enter the Change of Address. As a result the Office Action was sent to the wrong address. Accordingly, the entire delay in filing a

reply to the Office Action from the due date for the required reply until the filing of a grantable petition under 37 C.F.R. § 1.137(b) was unintentional.

If there are any other fees due in connection with the filing of this response, including any fees required for an extension of time under 37 CFR § 1.136, such an extension is requested, and the Commissioner is authorized to charge any related fees to our Deposit Account No. 06-0916.

Respectfully submitted,

FINNEGAN, HENDERSON,
FARABOW, GARRETT
& DUNNER, L.L.P.

Dated: December 11, 2007

By: Darrell D. Kinder, Jr.
Darrell D. Kinder, Jr.
Reg. No. 57,460
650.849.6733

EXPRESS MAIL LABEL NO.
EM 081425997 US

RAM Fee History Query

Revenue Accounting and Management

Name/Number: 10898043 Total Records Found: 4

Start Date: Any Date End Date: Any Date

Accounting Date	Sequence Num.	Fee Type	Fee Code	Fee Amount	Mailroom Date	Payment Method
12/13/2007	00000038	1	1453	$1,540.00	12/11/2007	DA 060916
12/13/2007	00000039	1	1814	$130.00	12/11/2007	DA 060916
09/15/2006	00000072	1	1806	$180.00	09/13/2006	CK
07/27/2004	00000049	1	1001	$770.00	07/22/2004	CK

UNITED STATES PATENT AND TRADEMARK OFFICE

COMMISSIONER FOR PATENTS
UNITED STATES PATENT AND TRADEMARK OFFICE
P.O. BOX 1450
ALEXANDRIA, VA 22313-1450
www.uspto.gov

Thelen, Reid, Brown, Raysman & Steiner, LLP
P.O. Box 1510
New York, NY 10150-1510

COPY MAILED

FEB 14 2008

OFFICE OF PETITIONS

In re Application of	:	
Steve Riedl et al.	:	
Application No. 10/898,069	:	DECISION ON PETITION
Filed: July 23, 2004	:	TO WITHDRAW
Attorney Docket No. 6154/3 CON	:	FROM RECORD
	:	

This is a decision on the Request to Withdraw as attorney or agent of record under 37 C.F.R. § 1.36(b), filed January 22, 2008.

The request is **NOT APPROVED**.

A grantable request to withdraw as attorney/agent of record must be signed by every attorney/agent seeking to withdraw or contain a clear indication that one attorney is signing on behalf of another/others. A request to withdraw will not be approved unless at least 30 (thirty) days would remain between the date of approval and the later of the expiration date of a time to file a response or the expiration date of the maximum time period which can be extended under 37 C.F.R. § 1.136(a).

The Office cannot approve the request at this time since the reasons provided do not meet any of the conditions under the mandatory or permissive categories enumerated in 37 CFR 10.40. Section 10.40 of Title 37 of the Code of Federal Regulation states, "[a] practitioner shall not withdraw from employment in a proceeding before the Office without permission from the Office[.]" More specifically, 37 CFR 10.40 states, "[i]f paragraph (b) of this section is not applicable, a practitioner may not request permission to withdraw in matter pending before the Office unless such request or such withdrawal is" for one the permissive reasons listed in 37 CFR 10.40(c). The reason set forth in the request, "File transferred," does not meet any of the conditions set forth in 37 CFR 10.40.

A courtesy copy of this decision is being mailed to applicant.

All future communications from the Office will continue to be directed to the above-listed address until otherwise notified by applicant or assignee.

A non-final rejection was mailed on January 8, 2008. Failure to timely respond will result in the abandonment of this application.

Telephone inquiries concerning this decision should be directed to Kimberly Inabinet at 571-272- 4618.

Kimberly Inabinet

Kimberly Inabinet
Petitions Examiner
Office of Petitions

cc: Steve Riedl
1580 Masters Court
Superior, CO 80027

cc: Seith Ostrow
Dreier, LLP
499 Park Avenue
New York, NY 10022

RECEIVED
CENTRAL FAX CENTER
DEC 2 3 2005

Application No. 10/898,089
Petition to Make Special

Customer No. 01933

Attorney Docket No. 04358/LH

IN THE UNITED STATES PATENT AND TRADEMARK OFFICE

Applicant(s): Moshe MELLER

Serial No. : 10/898,089

Filed : July 21, 2004

For : WIND-POWERED LINEAR MOTION HYDROGEN PRODUCTION SYSTEMS

Art Unit : 1753

Examiner : Not Yet Assigned

CERTIFICATE OF FACSIMILE TRANSMISSION
TO NO. 1-571-273-8300

TOTAL PAGES: 2

Petition to Make Special(2)

I hereby certify that this paper is being facsimile transmitted to the Commissioner for Patents on the date noted below.

Sharon Portnoy

Sharon Portnoy

Dated: December 23, 2005

In the event that this Paper is late filed, and the necessary petition for extension of time is not filed concurrently herewith, please consider this as a Petition for the requisite extension of time, and to the extent not tendered by form PTO-2038 attached hereto, authorization to charge the extension fee to Account No. 06-1378.

BEST AVAILABLE COPY

PETITION TO MAKE SPECIAL - 37 CFR 1.102(C)

Commissioner for Patents
P.O. Box 1450
Alexandria, VA 22313-1450

S I R :

It is respectfully requested that this application be made special on the grounds that it will contribute to the development or conservation of energy resources. See 37 CFR 1.102(c)(2)(ii).

More specifically, the present application is directed to a new method of harnessing wind power. In particular, according to one embodiment of the present invention, vessels floating in water are driven to move by the wind, and the movement of the vessels is used to produce hydrogen from the water in which the vessels are floating. See, for example, claim 1, the Abstract, and Figs. 2 and 3.

PETITION GRANTED

William Krynski
Special Program Examiner
Technology Center 1700
JAN 1 8 2006

UNITED STATES PATENT AND TRADEMARK OFFICE

Commissioner for Patents
United States Patent and Trademark Office
P.O. Box 1450
Alexandria, VA 22313-1450
www.uspto.gov

HOFFMAN & BARON, LLP
6900 JERICHO TURNPIKE
SYOSSET, NY 11791

MAILED

JUL 06 2009

OFFICE OF PETITIONS

In re Application of
Sharon Mi Lyn TAN
Application No. 10/898,102
Filed: July 23, 2004
Attorney Docket No. **S63.2B-14410-US01**

DECISION ON PETITION TO WITHDRAW FROM RECORD

This is a decision on the Request to Withdraw as attorney or agent of record under 37 C.F.R. § 1.36(b), filed March 18, 2009.

The request is **DISMISS** as moot.

A review of the file record indicates that the power of attorney to **HOFFMAN & BARON, LLP** has been revoked by the assignee of the patent application on May 15, 2009. Accordingly, the request to withdraw under 37 C.F.R. § 1.36(b) is moot.

All future communications from the Office will continue to be directed to the below-listed address until otherwise notified by applicant.

Telephone inquires concerning this decision should be directed to the undersigned at 571-272-7253.

/Monica A. Graves/
Petitions Examiner, Office of Petitions

cc: **VIDAS, ARRETT & STEINKRAUS, P.A.**
6640 SHADY OAK ROAD, SUITE 400
EDEN PRAIRIE, MN 55344

UNITED STATES PATENT AND TRADEMARK OFFICE

Commissioner for Patents
United States Patent and Trademark Office
P.O. Box 1450
Alexandria, VA 22313-1450
www.uspto.gov

LARSON, NEWMAN, ABEL, POLANSKY & WHITE, LLP
5914 WEST COURTYARD DRIVE
SUITE 200
AUSTIN, TX 78730

COPY MAILED

JUN 21 2006

OFFICE OF PETITIONS

In re Application of	:	
Primm, Michael	:	DECISION ON PETITION
Application No. 10/898,112	:	TO WITHDRAW
Filed: July 23, 2004	:	FROM RECORD
Attorney Docket No. 1017.0036-CIP	:	

This is a decision on the Request to Withdraw as attorney or agent of record under 37 C.F.R. § 1.36(b), filed October 28, 2005.

The request is **NOT APPROVED** as moot.

A review of the file record indicates that the power of attorney to the attorneys/agents associated with Customer Number 34456 has been revoked by the assignee of the entire interest of the patent application. Accordingly, the request to withdraw under 37 C.F.R. § 1.36(b) is moot.

All future communications from the Office will continue to be directed to the first below-listed address until otherwise notified by applicant.

Telephone inquires concerning this decision should be directed to Petitions Examiner Liana Chase at 571-272- 3206. All other inquires concerning either the examination or status of the application should be directed to the Technology Center.

David Bucci
Petitions Examiner
Office of Petitions

cc:

TOLER SCHAFFER, LLP
5000 PLAZA ON THE LAKES
SUITE 265
AUSTIN TX 78746

MINTZ LEVIN COHN FERRIS GLOVSKY AND POPEO, P.C.
ONE FINANCIAL CENTER
BOSTON, MA 02111

UNITED STATES PATENT AND TRADEMARK OFFICE

Commissioner for Patents
United States Patent and Trademark Office
P.O. Box 1450
Alexandria, VA 22313-1450
www.uspto.gov

VOLPE AND KOENIG, P.C.
UNITED PLAZA, SUITE 1600
30 SOUTH 17TH STREET
PHILADELPHIA PA 19103

COPY MAILED

NOV 1 5 2007

OFFICE OF PETITIONS

In re Application of	:	
Gianfranco Guderzo	:	
Application No. 10/898,117	:	DECISION GRANTING PETITION
Filed: July 23, 2004	:	UNDER 37 CFR 1.313(c)(2)
Attorney Docket No. CAM3-PT063	:	

This is a decision on the petition under 37 CFR 1.313(c)(2), filed November 9, 2007, to withdraw the above-identified application from issue after payment of the issue fee.

The petition is **GRANTED**.

The above-identified application is withdrawn from issue for consideration of a submission under 37 CFR 1.114 (request for continued examination). *See* 37 CFR 1.313(c)(2).

Petitioner is advised that the issue fee paid on November 6, 2007 cannot be refunded. If, however, this application is again allowed, petitioner may request that it be applied towards the issue fee required by the new Notice of Allowance.[1]

Telephone inquiries should be directed to Terri Williams at (571) 272-2991.

This application is being referred to Technology Center AU 3661 for processing of the request for continued examination under 37 CFR 1.114 and for consideration of the concurrently filed Information Disclosure Statement.

Frances Hicks
Petitions Examiner
Office of Petitions

---

[1] *The request to apply the issue fee to the new Notice may be satisfied by completing and returning the new Part B – Fee(s) Transmittal Form (along with any balance due at the time of submission). Petitioner is advised that the Issue Fee Transmittal Form* ***must*** *be completed and timely submitted to avoid abandonment of the application.*

UNITED STATES PATENT AND TRADEMARK OFFICE

UNITED STATES DEPARTMENT OF COMMERCE
United States Patent and Trademark Office
Address: COMMISSIONER FOR PATENTS
P.O. Box 1450
Alexandria, Virginia 22313-1450
www.uspto.gov

DRINKER BIDDLE & REATH LLP
ATTN: PATENT DOCKET DEPT.
191 N. WACKER DRIVE, SUITE 3700
CHICAGO, IL 60606

Mail Date: 04/20/2010

Applicant	: Jae-wook Han	: DECISION ON REQUEST FOR
Patent Number	: 7634769	: RECALCULATION of PATENT
Issue Date	: 12/15/2009	: TERM ADJUSTMENT IN VIEW
Appliction No	: 10/898,121	: OF WYETH AND NOTICE OF INTENT TO
Filed	: 07/23/2004	: ISSUE CERTIFICATE OF CORRECTION
		:

The Request for Recalculation is **GRANTED** to the extent indicated.

The patent term adjustment has been determined to be **1544** days. The USPTO will *sua sponte* issue a certificate of correction reflecting the amount of PTA days determined by the recalculation.

Prior to the issuance of the certificate of correction, the USPTO will afford patentee an opportunity to be heard and request reconsideration. Accordingly, patentee has **one month or thirty (30) days**, whichever is longer, to file a request for reconsideration of this patent term adjustment calculation. See 35 U.S.C. 154(b)(3)(B)(ii) and 37 CFR 1.322(a)(4). No extensions of time will be granted under 37 CFR 1.136.

Patentee should use document code PET.OP if electronically filing a request for reconsideration of this patent term adjustment calculation. The patentee must also include the information required by 37 CFR 1.705(b)(2) and the fee required by 37 CFR 1.18(e). If patentee does not file a timely request for reconsideration of this patent term adjustment calculation including the information required by 37 CFR 1.705(b)(2) and the fee required by 37 CFR 1.18(e), the USPTO will issue a certificate of correction reflecting the PTA determination noted above.

Patentee should be aware that in order to preserve the right to review in the United States District Court for the District of Columbia of the USPTO patent term adjustment determination, patentee must ensure that he or she also take the steps required under 35 U.S.C. 154(b)(4)(A) in a timely manner. Nothing in the request for recalculation should be construed as providing an alternative time frame for commencing a civil action under 35 U.S.C. 154(b)(4)(A).

Any questions concerning this decision should be directed to the Office of Patent Legal Administration at 571-272-7702.

UNITED STATES PATENT AND TRADEMARK OFFICE

Commissioner for Patents
United States Patent and Trademark Office
P.O. Box 1450
Alexandria, VA 22313-1450
www.uspto.gov

RAMAN N. DEWAN
JACKSON WALKER, L.L.P.
100 CONGRESS AVENUE
SUITE 1100
AUSTIN, TX 78701

COPY MAILED

JUN 1 0 2009

OFFICE OF PETITIONS

In re Application of
Omon Ayodele Edeki, et al.
Application No. 10/898,129
Filed: July 23, 2004
Attorney Docket No. 134640.00001

ON PETITION

This is a decision in response to the petition, filed April 17, 2009, to revive the above-identified application under the provisions of 37 CFR 1.137(b).

The petition is **GRANTED**.

The application became abandoned for failure to reply in a timely manner to the non-final Office action mailed February 28, 2008, which set a shortened statutory period for reply of three (3) months. No extension of time under the provisions of 37 CFR 1.136(a) was obtained. Accordingly, the application became abandoned on May 29, 2008. A Notice of Abandonment was mailed on October 29, 2008. On April 17, 2009, the present petition was filed.

The petition satisfies the requirements of 37 CFR 1.137(b) in that petitioner has supplied (1) the reply in the form of amendment; (2) the petition fee of $810; and (3) an adequate statement of unintentional delay[1].

The application is being referred to Technology Center AU 2136 for appropriate action by the Examiner in the normal course of business on the amendment received April 17, 2009.

Telephone inquiries concerning this decision should be directed to the undersigned at (571) 272-3204. Inquiries relating to further prosecution should be directed to the Technology Center.

Sherry D. Brinkley
Petitions Examiner
Office of Petitions

[1] 37 CFR 1.137(b)(3) requires a statement that the entire delay in filing the required reply from the due date for the reply until the filing of a grantable petition pursuant to 37 CFR 1.137(b) was unintentional. While it is not apparent whether the person signing the statement of unintentional delay was in a position to have firsthand or direct knowledge of the facts and circumstances of the delay at issue, such statement is being treated as having been made as the result of a reasonable inquiry into the facts and circumstances of such delay. See 37 CFR 10.18(b) and Changes to Patent Practice and Procedure; Final Rule Notice, 62 Fed. Reg. 53131, 53178 (October 10, 1997), 1203 Off. Gaz. Pat. Office 63, 103 (October 21, 1997). In the event that such an inquiry has not been made, petitioner must make such an inquiry. If such inquiry results in the discovery that it is not correct that the entire delay in filing the required reply from the due date for the reply until the filing of a grantable petition pursuant to 37 CFR 1.137(b) was unintentional, petitioner must notify the Office.

UNITED STATES PATENT AND TRADEMARK OFFICE

UNITED STATES DEPARTMENT OF COMMERCE
United States Patent and Trademark Office
Address: COMMISSIONER FOR PATENTS
P.O. Box 1450
Alexandria, Virginia 22313-1450
www.uspto.gov

JACKSON WALKER L.L.P.
ATTN: INTELLECTUAL PROPERTY DEPARTMENT
100 CONGRESS AVENUE
SUITE 1100
AUSTIN, TX 78701

Mail Date: 05/06/2010

Applicant	: Omon Ayodele Edeki	: DECISION ON REQUEST FOR
Patent Number	: 7647645	: RECALCULATION of PATENT
Issue Date	: 01/12/2010	: TERM ADJUSTMENT IN VIEW
Application No	: 10/898,129	: OF WYETH AND NOTICE OF INTENT TO
Filed	: 07/23/2004	: ISSUE CERTIFICATE OF CORRECTION
		:

The Request for Recalculation is **GRANTED** to the extent indicated.

The patent term adjustment has been determined to be **1572** days. The USPTO will *sua sponte* issue a certificate of correction reflecting the amount of PTA days determined by the recalculation.

Prior to the issuance of the certificate of correction, the USPTO will afford patentee an opportunity to be heard and request reconsideration. Accordingly, patentee has **one month or thirty (30) days**, whichever is longer, to file a request for reconsideration of this patent term adjustment calculation. See 35 U.S.C. 154(b)(3)(B)(ii) and 37 CFR 1.322(a)(4). No extensions of time will be granted under 37 CFR 1.136.

Patentee should use document code PET.OP if electronically filing a request for reconsideration of this patent term adjustment calculation. The patentee must also include the information required by 37 CFR 1.705(b)(2) and the fee required by 37 CFR 1.18(e). If patentee does not file a timely request for reconsideration of this patent term adjustment calculation including the information required by 37 CFR 1.705(b)(2) and the fee required by 37 CFR 1.18(e), the USPTO will issue a certificate of correction reflecting the PTA determination noted above.

Patentee should be aware that in order to preserve the right to review in the United States District Court for the District of Columbia of the USPTO patent term adjustment determination, patentee must ensure that he or she also take the steps required under 35 U.S.C. 154(b)(4)(A) in a timely manner. Nothing in the request for recalculation should be construed as providing an alternative time frame for commencing a civil action under 35 U.S.C. 154(b)(4)(A).

Any questions concerning this decision should be directed to the Office of Patent Legal Administration at 571-272-7702.

UNITED STATES PATENT AND TRADEMARK OFFICE

COMMISSIONER FOR PATENTS
UNITED STATES PATENT AND TRADEMARK OFFICE
P.O. BOX 1450
ALEXANDRIA, VA 22313-1450
www.uspto.gov

Akerman Senterfitt
P.O. Box 3188
West Palm Beach, FL 33402-3188

COPY MAILED

MAY 19 2008

In re Application of	:	
Elena Shembel et al.	:	
Application No. 10/898,134	:	DECISION ON PETITION
Filed: July 23, 2004	:	TO WITHDRAW
Attorney Docket No.	:	FROM RECORD
	:	

This is a decision on the Request to Withdraw as attorney or agent of record under 37 C.F.R § 1.36(b), filed February 11, 2008.

The request is **APPROVED**.

A grantable request to withdraw as attorney/agent of record must be signed by every attorney/agent seeking to withdraw or contain a clear indication that one attorney is signing on behalf of another/others. A request to withdraw will not be approved unless at least 30 (thirty) days would remain between the date of approval and the later of the expiration date of a time to file a response or the expiration date of the maximum time period which can be extended under 37 C.F.R. § 1.136(a).

The request was signed by Neil R. Jetter on behalf of all attorneys of record who are associated with customer No. 30448. All attorneys/agents associated with the Customer Number 30448 have been withdrawn.

The correspondence address of record has been changed and is copied below. It is further noted that there is no attorney of record.

Telephone inquiries concerning this decision should be directed to Kimberly Inabinet at 571-272-4618.

Kimberly Inabinet
Petitions Examiner
Office of Petitions

cc: Energize Corporation
c/o Elena Shembel
4956 Rothschild Drive
Coral Springs, FL 33067

UNITED STATES PATENT AND TRADEMARK OFFICE

UNITED STATES DEPARTMENT OF COMMERCE
United States Patent and Trademark Office
Address: COMMISSIONER FOR PATENTS
P.O. Box 1450
Alexandria, Virginia 22313-1450
www.uspto.gov

APPLICATION NUMBER	FILING OR 371(C) DATE	FIRST NAMED APPLICANT	ATTY. DOCKET NO./TITLE
10/898,134	07/23/2004	Elena Shembel	8326-8

CONFIRMATION NO. 3719

POWER OF ATTORNEY NOTICE

30448
AKERMAN SENTERFITT
P.O. BOX 3188
WEST PALM BEACH, FL 33402-3188

OC000000030006827

Date Mailed: 05/16/2008

NOTICE REGARDING CHANGE OF POWER OF ATTORNEY

This is in response to the Power of Attorney filed 02/11/2008.

- The withdrawal as attorney in this application has been accepted. Future correspondence will be mailed to the new address of record. 37 CFR 1.33.

/kainabinet/

Office of Data Management, Application Assistance Unit (571) 272-4000, or (571) 272-4200, or 1-888-786-0101

UNITED STATES PATENT AND TRADEMARK OFFICE

UNITED STATES DEPARTMENT OF COMMERCE
United States Patent and Trademark Office
Address: COMMISSIONER FOR PATENTS
P.O. Box 1450
Alexandria, Virginia 22313-1450
www.uspto.gov

APPLICATION NO.	FILING DATE	FIRST NAMED INVENTOR	ATTORNEY DOCKET NO.	CONFIRMATION NO.
10/898,146	07/23/2004	Olivier Citti	1035-CO4313	1781

34456 7590 01/26/2009
LARSON NEWMAN ABEL & POLANSKY, LLP
5914 WEST COURTYARD DRIVE
SUITE 200
AUSTIN, TX 78730

EXAMINER
HALPERN, MARK

ART UNIT	PAPER NUMBER
1791	

MAIL DATE	DELIVERY MODE
01/26/2009	PAPER

Please find below and/or attached an Office communication concerning this application or proceeding.

The time period for reply, if any, is set in the attached communication.

UNITED STATES PATENT AND TRADEMARK OFFICE

Commissioner for Patents
United States Patent and Trademark Office
P.O. Box 1450
Alexandria, VA 22313-1450
www.uspto.gov

1/26/09

In re Application of :
Citti et al. :
Serial Number: 10/898,146 :
Filed: July 23, 2004 :
For: Tin Oxide Material With Improved Electrical :
Properties For Glass Melting :

This is a decision on the PETITION TO ENTER APPLICANTS' RESPONSE TO FINAL OFFICE ACTION, filed November 26, 2008, filed under 37 CFR 1.181.

Applicants filed a response to the office action on August 27, 2008. Applicants amended claim 22 to incorporate the limitations of claim 1, so that amended claim 22 is now an independent claim. The scope of amended claim 22 has not changed as compared to claim 22, formally in dependent form.

The examiner refused entry of the amendment by an advisory action. The examiner states that applicants proposed amendment present a newly claimed embodiment not previously presented.

DECISION

The petition is **GRANTED**.

The amendment will be entered.

Jacqueline M. Stone

Jacqueline M. Stone, Director
Technology Center 1700
Chemical and Materials Engineering

George R. Meyer
LARSON NEWMAN ABEL & POLANSKY, LLP
5914 WEST COURTYARD DRIVE
SUITE 200
AUSTIN TX 78730

UNITED STATES PATENT AND TRADEMARK OFFICE

Commissioner for Patents
United States Patent and Trademark Office
P.O. Box 1450
Alexandria, VA 22313-1450
www.uspto.gov

STEVENS LAW GROUP
P.O. BOX 1667
SAN JOSE, CA 95109

COPY MAILED

NOV 03 2006

OFFICE OF PETITIONS

In re Application of
David T. Hass, et al.
Application No. 10/898,150
Filed: July 23, 2004
Attorney Docket No. RZMI-P104

DECISION ON PETITION
TO WITHDRAW
FROM RECORD

This is a decision on the Request to Withdraw as attorney or agent of record under 37 C.F.R. § 1.36(b) filed August 1, 2006.

The request is **NOT APPROVED**.

A grantable request to withdraw as attorney/agent of record must be signed by every attorney/agent seeking to withdraw or contain a clear indication that one attorney is signing on behalf of another/others. A request to withdraw will not be approved unless at least 30 (thirty) days would remain between the date of approval and the later of the expiration date of a time to file a response or the expiration date of the maximum time period which can be extended under 37 C.F.R. § 1.136(a).

The Office cannot approve the request at this time since the reasons provided do not meet any of the conditions under the mandatory or permissive categories enumerated in 37 CFR 10.40. Section 10.40 of Title 37 of the Code of Federal Regulation states, "[a] practitioner shall not withdraw from employment in a proceeding before the Office without permission from the Office[.]" More specifically, 37 CFR 10.40 states, "[i]f paragraph (b) of this section is not applicable, a practitioner may not request permission to withdraw in matter pending before the Office unless such request or such withdrawal is" for one the permissive reasons listed in 37 CFR 10.40(c). The reasons set forth in the request, "this request is being made because of the assignee, does not meet any the conditions set forth in 37 CFR 10.40.

A power of attorney, pursuant to § 1.32(b), may be revoked at any stage in the proceeding of a case by an applicant for patent (§ 1.41(b)) or an assignee of the entire interest of the applicant under § 3.71(b). Fewer than all of the applicants (or by fewer than the assignee of the entire interest of the applicant) may only revoke the power of attorney upon a showing of sufficient

cause, and payment of the petition fee set forth § 1.17(h). For the assignee to take action a proper statement under § 3.73(b) is required.

In order to request or take action in a patent matter, the assignee must establish its ownership of the patent to the satisfaction of the Director. In this regard, a Statement under 37 CFR 3.73(b) must have either: (i) documentary evidence of a chain of title from the original owner to the assignee (*e.g.*, copy of an executed assignment), and a statement affirming that the documentary evidence of the chain of title from the original owner to the assignee was or concurrently is being submitted for recordation pursuant to § 3.11; or (ii) a statement specifying where documentary evidence of a chain of title from the original owner to the assignee is recorded in the assignment records of the Office (*e.g.*, reel and frame number). The power of attorney filed on August 31, 2006 does not include one of the above two options. The power of attorney is hereby vacated.

All future communications from the Office will continue to be directed to the below-listed address until otherwise notified by applicant.

Telephone inquiries concerning this decision should be directed to April Wise at 571-272-1642.

April M. Wise
Petitions Examiner
Office of Petitions

cc: RAZA MICROELECTRONICS, INC.
LEGAL DEPARTMENT
18920 FORGE DRIVE
CUPERTINO, CA 95014-0701

UNITED STATES PATENT AND TRADEMARK OFFICE

Commissioner for Patents
United States Patent and Trademark Office
P.O. Box 1450
Alexandria, VA 22313-1450
www.uspto.gov

DINSMORE & SHOHL LLP
One Dayton Centre
One South Main Street, Suite 1300
Dayton, OH 45402-2023

COPY MAILED

SEP 15 2006

OFFICE OF PETITIONS

In re Application of :
Nichols, et al. :
Application No. 10/898,156 :
Application Filing Date: July 23, 2004 :
Attorney Docket No. SPC 0441 PA/40719.777/A15

DECISION ON PETITION UNDER
37 CFR 1.137(f)

This is a decision on the petition under 37 CFR 1.137(f), filed December 12, 2005, to revive the instant non-provisional application.

The petition under 37 CFR 1.137(f) is granted.

This application became abandoned pursuant to 35 U.S.C. § 122(b)(2)(B(iii) for failure to timely notify the Office of the filing of an application in a foreign country.

A petition under 37 CFR 1.137(f) must be accompanied by: (1) the reply which is met by the notification of such filing in a foreign country or under a multinational treaty[1]; (2) the petition fee as set forth in 37 CFR 1.17(m), and (3) a statement that the entire delay in filing the required reply from the due date of the reply until the filing of a grantable petition was unintentional. The Commissioner may require additional information where there is a question whether the delay was unintentional.

The instant petition is found in compliance with 37 CFR 1.137(f).

Accordingly, the failure to timely notify the Office of a foreign filing within 45 days as provided by 35 U.S.C. § 122(b)(2)(B)(iii) is accepted as having been unintentionally delayed.

The application file is being directed to Technology Center 23600, GAU 3662 for further processing.

Further inquiries regarding this decision may be directed to the undersigned at (571) 272-3222.

Kenya A. McLaughlin
Petitions Attorney
Office of Petitions

Enclosure: Communication Regarding Rescission of Nonpublication Request and/or Notice of Foreign Filing

[1] The filing of a petition under this section will not relieve applicant of his obligation to reply to any outstanding Office action.

UNITED STATES PATENT AND TRADEMARK OFFICE

UNITED STATES DEPARTMENT OF COMMERCE
United States Patent and Trademark Office
Address: COMMISSIONER FOR PATENTS
P.O. Box 1450
Alexandria, Virginia 22313-1450
www.uspto.gov

APPLICATION NUMBER	FILING/RECEIPT DATE	FIRST NAMED APPLICANT	ATTY. DOCKET NO.
10/898,156	07/23/2004	Mark E. Nichols	SPC 0441 PA/40719.777/A15

CONFIRMATION NO. 1778

DINSMORE & SHOHL LLP
One Dayton Centre
One South Main Street, Suite 1300
Dayton, OH 45402-2023

Date Mailed: 09/05/2006

Communication Regarding Rescission Of Nonpublication Request and/or Notice of Foreign Filing

Applicant's rescission of the previously-filed nonpublication request and/or notice of foreign filing is acknowledged. The paper has been reflected in the Patent and Trademark Office's (USPTO's) computer records so that the earliest possible projected publication date can be assigned.

The projected publication date is 12/14/2006.

If applicant rescinded the nonpublication request before or on the date of "foreign filing,"[1] then no notice of foreign filing is required.

If applicant foreign filed the application after filing the above application and before filing the rescission, and the rescission did not also include a notice of foreign filing, then a notice of foreign filing (not merely a rescission) is required to be filed within 45 days of the date of foreign filing. See 35 U.S.C. § 122(b)(2)(B)(iii), and Clarification of the United States Patent and Trademark Office's Interpretation of the Provisions of 35 U.S.C. § 122(b)(2)(B)(ii)-(iv), 1272 Off. Gaz. Pat. Office 22 (July 1, 2003).

If a notice of foreign filing is required and is not filed within 45 days of the date of foreign filing, then the application becomes abandoned pursuant to 35 U.S.C. § 122(b)(2)(B)(iii). In this situation, applicant should either file a petition to revive or notify the Office that the application is abandoned. See 37 CFR 1.137(f). Any such petition to revive will be forwarded to the Office of Petitions for a decision. Note that the filing of the petition will not operate to stay any period of reply that may be running against the application.

Questions regarding petitions to revive should be directed to the Office of Petitions at (571) 272-3282. Questions regarding publications of patent applications should be directed to the patent application publication hotline at (703) 605-4283 or by e-mail pgpub@uspto.gov.

[1] Note, for purpose of this notice, that "foreign filing" means "filing an application directed to the same invention in another country, or under a multilateral international agreement, that requires publication of applications 18 months after filing".

UNITED STATES PATENT AND TRADEMARK OFFICE

UNITED STATES DEPARTMENT OF COMMERCE
United States Patent and Trademark Office
Address: COMMISSIONER FOR PATENTS
P.O. Box 1450
Alexandria, Virginia 22313-1450
www.uspto.gov

APPLICATION NUMBER	FILING/RECEIPT DATE	FIRST NAMED APPLICANT	ATTY. DOCKET NO.
10/898,156	07/23/2004	Mark E. Nichols	SPC 0441 PA/40719.777/A15

CONFIRMATION NO. 1778

DINSMORE & SHOHL LLP
One Dayton Centre
One South Main Street, Suite 1300
Dayton, OH 45402-2023

Date Mailed: 09/05/2006

Communication Regarding Rescission Of Nonpublication Request and/or Notice of Foreign Filing

Applicant's rescission of the previously-filed nonpublication request and/or notice of foreign filing is acknowledged. The paper has been reflected in the Patent and Trademark Office's (USPTO's) computer records so that the earliest possible projected publication date can be assigned.

The projected publication date is 12/14/2006.

If applicant rescinded the nonpublication request before or on the date of "foreign filing,"[1] then no notice of foreign filing is required.

If applicant foreign filed the application after filing the above application and before filing the rescission, and the rescission did not also include a notice of foreign filing, then a notice of foreign filing (not merely a rescission) is required to be filed within 45 days of the date of foreign filing. See 35 U.S.C. § 122(b)(2)(B)(iii), and Clarification of the United States Patent and Trademark Office's Interpretation of the Provisions of 35 U.S.C. § 122(b)(2)(B)(ii)-(iv), 1272 Off. Gaz. Pat. Office 22 (July 1, 2003).

If a notice of foreign filing is required and is not filed within 45 days of the date of foreign filing, then the application becomes abandoned pursuant to 35 U.S.C. § 122(b)(2)(B)(iii). In this situation, applicant should either file a petition to revive or notify the Office that the application is abandoned. See 37 CFR 1.137(f). Any such petition to revive will be forwarded to the Office of Petitions for a decision. Note that the filing of the petition will not operate to stay any period of reply that may be running against the application.

Questions regarding petitions to revive should be directed to the Office of Petitions at (571) 272-3282. Questions regarding publications of patent applications should be directed to the patent application publication hotline at (703) 605-4283 or by e-mail pgpub@uspto.gov.

[1] Note, for purpose of this notice, that "foreign filing" means "filing an application directed to the same invention in another country, or under a multilateral international agreement, that requires publication of applications 18 months after filing".

UNITED STATES PATENT AND TRADEMARK OFFICE

UNITED STATES DEPARTMENT OF COMMERCE
United States Patent and Trademark Office
Address: COMMISSIONER FOR PATENTS
P.O. Box 1450
Alexandria, Virginia 22313-1450
www.uspto.gov

STAAS & HALSEY LLP
SUITE 700
1201 NEW YORK AVENUE, N.W.
WASHINGTON, DC 20005

Mail Date: 04/21/2010

Applicant	: Won Tae Kim	: DECISION ON REQUEST FOR
Patent Number	: 7588218	: RECALCULATION of PATENT
Issue Date	: 09/15/2009	: TERM ADJUSTMENT IN VIEW
Appliction No	: 10/898,162	: OF WYETH AND NOTICE OF INTENT TO
Filed	: 07/26/2004	: ISSUE CERTIFICATE OF CORRECTION
		:

The Request for Recalculation is **GRANTED** to the extent indicated.

The patent term adjustment has been determined to be **0** days. The USPTO will *sua sponte* issue a certificate of correction reflecting the amount of PTA days determined by the recalculation.

Prior to the issuance of the certificate of correction, the USPTO will afford patentee an opportunity to be heard and request reconsideration. Accordingly, patentee has **one month or thirty (30) days**, whichever is longer, to file a request for reconsideration of this patent term adjustment calculation. See 35 U.S.C. 154(b)(3)(B)(ii) and 37 CFR 1.322(a)(4). No extensions of time will be granted under 37 CFR 1.136.

Patentee should use document code PET.OP if electronically filing a request for reconsideration of this patent term adjustment calculation. The patentee must also include the information required by 37 CFR 1.705(b)(2) and the fee required by 37 CFR 1.18(e). If patentee does not file a timely request for reconsideration of this patent term adjustment calculation including the information required by 37 CFR 1.705(b)(2) and the fee required by 37 CFR 1.18(e), the USPTO will issue a certificate of correction reflecting the PTA determination noted above.

Patentee should be aware that in order to preserve the right to review in the United States District Court for the District of Columbia of the USPTO patent term adjustment determination, patentee must ensure that he or she also take the steps required under 35 U.S.C. 154(b)(4)(A) in a timely manner. Nothing in the request for recalculation should be construed as providing an alternative time frame for commencing a civil action under 35 U.S.C. 154(b)(4)(A).

Any questions concerning this decision should be directed to the Office of Patent Legal Administration at 571-272-7702.

UNITED STATES PATENT AND TRADEMARK OFFICE

Commissioner for Patents
United States Patent and Trademark Office
P.O. Box 1450
Alexandria, VA 22313-1450
www.uspto.gov

Donald J. Lecher
Suite 700
2111 Wilson Boulevard
Arlington, VA 22201

JUN 2 2 2005

In re Application of:
Robert Kressin et al.
Serial No.: 10/898,193
Filed: July 26, 2004
Attorney's Docket No.: 1039.01

DECISION ON PETITION
TO MAKE SPECIAL

This is a decision on the petition filed on December 7, 2004 (supplemented on March 8, 2005) to make the above-identified application special under the accelerated examination procedure set forth in MPEP § 708.02(VIII) in accordance with 37 C.F.R. § 1.102(d).

The petition is **DISMISSED**.

In support of the petition, petitioner provides: a) the applicable petition fee; b) a statement that all claims are directed to a single invention; c) a statement that a pre-examination search was made, including the search areas; d) a copy of each of the references deemed most closely related to the claimed subject matter; and e) a discussion of the references pointing out how the claimed subject matter is distinguishable over the references.

For accelerated examination under MPEP § 708.02(VIII) in accordance with 37 C.F.R. § 1.102(d), a showing of the following is required: a) a petition to make special accompanied by the applicable petition fee; b) all claims are directed to a single invention; c) a statement that a pre-examination search was made, including the search areas; d) a copy of each of the references deemed most closely related to the claimed subject matter; and e) a detailed discussion of the references pointing out with the particularity required by 37 CFR 1.111 (b) and (c), how the claimed subject matter is distinguishable over the references.

The requirements of MPEP § 708.02(VIII)(a) – (d) are considered to have been met. However, petitioner fails to point out with the particularity required by 37 CFR § 1.111 (b) and (c), how the claimed subject matter is distinguishable over the references. Therefore, petitioner fails to meet the requirement of MPEP § 708.02(VIII)(e).

37 CFR § 1.111 (b) states"[a] general allegation that the claims define a patentable invention without specifically pointing out how the language of the claims patentably distinguishes them from the references does not comply with the requirements of this section." 37 CFR § 1.111 (c) states in part "the applicant or patent owner must clearly point out the patentable novelty which he or she thinks the claims present in view of the state of the art disclosed by the references cited or the objections made."

The petition presents a summary of each of the references and along with each summary recites part of one of the independent claims (either claim 10 or claim 23). The petition fails to distinguish each independent claim from each reference in a manner satisfying 37 CFR § 1.111 (b) and (c). The petition fails to state what limitations each of the independent claims recite which are neither disclosed nor made obvious by the references. Such a statement is required under 37 CFR § 1.111 (b) and (c). A mere summary of each reference along with a recitation of part of one of the independent claims with no comparison and distinguishment between the reference and the other independent claims is insufficient to satisfy the requirements of MPEP § 708.02(VIII)(e).

For the above-mentioned reasons, the petition is dismissed. The application will therefore be taken up by the examiner for action in its regular turn.

Any request for reconsideration of this decision must be submitted within 2 (two) months of the date of this decision in order to be considered timely.

Any inquiry regarding this decision should be directed to Edward P. Westin at (571) 272-1638.

Edward Westin

Edward P. Westin, Special Programs Examiner
Technology Center 2800
Semiconductors, Electrical and
Optical Systems, and Components

UNITED STATES PATENT AND TRADEMARK OFFICE

Commissioner for Patents
United States Patent and Trademark Office
P.O. Box 1450
Alexandria, VA 22313-1450
www.uspto.gov

DONALD J. LECHER
SUITE 700
2111 WILSON BOULEVARD
ARLINGTON, VA 22201

OCT 06 2005

In re Application of: ROBERT KRESSIN ET AL. Serial No.: 10/898,193 Filed: July 26, 2004 Docket No.: 1039.01	DECISION ON RESUBMISSION OF PETITION TO MAKE SPECIAL UNDER 37 C.F.R. § 1.102(d)

This is a decision on the renewed petition, filed on August 23, 2005, to make the above-identified application special under the accelerated examination procedure set forth in MPEP § 708.02(VIII) in accordance with 37 C.F.R. § 1.102(d).

The petition to make the application special is **DENIED**.

Petitioner requests reconsideration of the prior decision of June 22, 2005, dismissing the petition to make the application special under the provision of MPEP 708.02(VIII). The prior decision indicated that the petition lacked the proper showing required under MPEP § 708.02(VIII)(e). Specifically, the prior decision held that the petition "fails to state what limitations each of the independent claims recite which are neither disclosed nor made obvious by the references...[a] mere summary of each reference along with a recitation of part of one of the independent claims with no comparison and distinguishment between the reference and the other independent claims is insufficient to satisfy the requirements of MPEP § 708.02(VIII)(e)".

Petitioner again fails to point out with the particularity required by 37 CFR § 1.111 (b) and (c), how the claimed subject matter is distinguishable over the each of the references. Therefore, petitioner fails to meet the requirement of MPEP § 708.02(VIII)(e).

A *detailed discussion* of how each of the references overcomes *each* of the independent claims is required for the petition to be granted. Petitioner presents a brief discussion of the cited references, and states that they do not teach the specific limitations claimed in the independent claims. However, petitioner fails to indicate the specific limitations of each independent claim which are not taught by each reference. It must be made clear, for each reference, which claim elements are taught and which are not taught. The discussion of the references must be detailed enough to leave no guesswork as to the petitioner's reading of the teaching of the references with respect to each of the limitations of the claims.

For example, compare the discussion of the Anthonyson US 5,414,624 reference to claim 14. Petitioner states that the main difference is the failure of the reference to provide a camera. However, since claim 14 does not recite a camera, a camera cannot be the feature differentiating the reference from the claimed subject matter. Petitioner also recites a list of other features, including display device, input device, and communication link to remote central processing data system. This list, which appears in the discussion of each reference, does not appear to be tailored towards any particular reference or claim, as is required under the procedure for filing a petition to make an application special under the accelerated examination provision. This can be seen from cursory review of the Anthonyson reference, which reveals at least a display device [134], communication link [120], remote processing system [114], and input device [118]. While review of the petition is not directed towards the merits of the application in view of the references, the petition must be a bona fide effort to provide the required elements of MPEP 708.02 (VIII), including a discussion which points out with particularity how the claimed subject matter is patentable over the references. The use of stock phrases and imprecise portrayals of the claimed subject matter in the discussion as presented in the petition is not considered to provide the particularity required under 37 CFR 1.111(b) and (c).

While Technology Center Directors may have granted petitions that do not comply with the detailed discussion requirement of the Accelerated Examination procedure, Technology Center Director decisions on petitions are not binding precedent of the Patent Examining Corps, and the application of an improper standard in certain cases does not require the Office to continue to apply the improper standard in all cases. *See In re The Boulevard Entertainment, Inc.*, 334 F.3d 1336, 1343, 67 USPQ2d 1475, 1480 (Fed. Cir. 2003)).

For the above-mentioned reasons, the petition is denied. The application will therefore be taken up by the examiner for action in its regular turn.

Any inquiry regarding this decision should be directed to Edward P. Westin, Special Program Examiner, at (571) 272-1638.

Edward Westin

Edward P. Westin, Special Program Examiner
Technology Center 2800
Semiconductors, Electrical and Optical
Systems and Components

UNITED STATES PATENT AND TRADEMARK OFFICE

Commissioner for Patents
United States Patent and Trademark Office
P.O. Box 1450
Alexandria, VA 22313-1450
www.uspto.gov

George G. Jackson
P.O. Box 502
North Wilkesboro NC 28659

COPY MAILED

SEP 21 2009

OFFICE OF PETITIONS

In re Application of
Jackson
Application No. 10/898,212
Filed: November 26, 2005
Attorney Docket No. N/A
For: SPACE TIME CONTINUUM
INTERCEPT DETECTION SYSTEM

: DECISION ON PETITION

This is a decision on the petition under the unavoidable standard of 37 CFR 1.137(a), filed July 3, 2009, to revive the above-identified application.

The petition is **DISMISSED.**

Any further petition to revive must be submitted within TWO (2) MONTHS from the mail date of this decision. Extensions of time under 37 CFR 1.136(a) are permitted. The reconsideration request should include a cover letter entitled "Renewed Petition under 37 CFR 1.137(a)." This is **not** a final agency action within the meaning of 5 U.S.C.§ 704.

The above-identified application became abandoned on February 21, 2009 for failure to timely and properly reply to the final Office action, mailed November 20, 2008. Applicant filed $60.00 for a one-month extension of time on February 23, 2009. The fee amount was insufficient, as the fee due for a one-month extension of time was $65.00. In addition, it is noted that a reply to the final Office action was not filed until March 23, 2009. Thus, the March 23, 2009 amendment was filed too late. Even if petitioner had paid a full $65.00 for a one month extension of time, the March 23, 2009 reply would still have been filed too late, as March 20, 2009 would have been the last possible date to timely reply. The March 23, 2009 amendment was insufficient substantively, as well. The May 12, 2009 Advisory action explains that the March 23, 2009 amendment failed to place the application in *prima facie* condition for allowance.

Regarding fees, petitioner paid $60.00 on February 23, 2009. The fee due for a one-month extension of time on February 23, 2009 was $65.00. The fee is refundable. However, it is noted that petitioner paid only $255.00 toward the $270.00 Rule 137(a) petition fee. The Office will retain $15.00 of the $60.00 paid on February 23, 2009 and apply it toward the balance due for the Rule 137(a) petition fee. Office policy is not to refund amounts smaller than $50.00. Petitioner

should request that the excess $45.00 in petitioner's account with the Office be applied to any future fee due.

A grantable petition under 37 CFR 1.137(a) must be accompanied by: (1) the required reply, unless previously filed; (2) the petition fee as set forth in 37 CFR 1.17(l); (3) a showing to the satisfaction of the Director that the entire delay in filing the required reply from the due date for the reply until the filing of a grantable petition pursuant to 37 CFR 1.137(a) was unavoidable; and (4) any terminal disclaimer (and fee as set forth in 37 CFR 1.20(d)) required pursuant to 37 CFR 1.137(d).

The instant petition lacks items (1) and (3).

With respect to (1) above, petitioner has failed to file a proper reply to the November 20, 2008 final Office action. It appears the amendment filed with the present petition is a partial copy of the amendment filed on February 23, 2009, which failed to place this application in prima facie condition for allowance, as was explained in the May 12, 2009 Advisory action. A proper reply would be: (1) a Notice of Appeal, (2) the filing of a continuing application, (3) a 37 CFR 1.129(a) submission, if appropriate, (4) an amendment after final that makes the case ready for issuance or (4) an RCE. To be a proper reply, an amendment after final must eliminate all of the Examiner's objections and rejections, and thus place the case in *prima facie* condition for allowance.

With respect to (3) above, decisions on reviving abandoned applications on the basis of "unavoidable" delay have adopted the reasonably prudent person standard in determining if the delay was unavoidable:

> The word 'unavoidable' . . . is applicable to ordinary human affairs, and requires no more or greater care or diligence than is generally used and observed by prudent and careful men in relation to their most important business. It permits them in the exercise of this care to rely upon the ordinary and trustworthy agencies of mail and telegraph, worthy and reliable employees, and such other means and instrumentalities as are usually employed in such important business. If unexpectedly, or through the unforeseen fault or imperfection of these agencies and instrumentalities, there occurs a failure, it may properly be said to be unavoidable, all other conditions of promptness in its rectification being present.

In re Mattullath, 38 App. D.C. 497, 514-15 (1912)(quoting Ex parte Pratt, 1887 Dec. Comm'r Pat. 31, 32-33 (1887)); see also Winkler v. Ladd, 221 F. Supp. 550, 552, 138 USPQ 666, 167-68 (D.D.C. 1963), aff'd, 143 USPQ 172 (D.C. Cir. 1963); Ex parte Henrich, 1913 Dec. Comm'r Pat. 139, 141 (1913). In addition, decisions on revival are made on a "case-by-case basis, taking all the facts and circumstances into account." Smith v. Mossinghoff, 671 F.2d 533, 538, 213 USPQ 977, 982 (D.C. Cir. 1982). Finally, a petition cannot be granted where a petitioner has failed to meet his or her burden of establishing that the delay was "unavoidable." Haines v. Quigg, 673 F. Supp. 314, 316-17, 5 USPQ2d 1130, 1131-32 (N.D. Ind. 1987).

In the instant case, petitioner has failed to provide adequate evidence that the delay was unavoidable.

Petitioner failed to purchase a two-month extension of time when he filed a reply on March 23, 2009. A delay resulting from the lack of knowledge or improper application of the patent statute, rules of practice or the MPEP does not constitute an "unavoidable" delay. See Haines v. Quigg, 673 F. Supp. 314, 317, 5 USPQ2d 1130, 1132 (N.D. Ind. 1987), Vincent v. Mossinghoff, 230 USPQ 621, 624 (D.D.C. 1985); Smith v. Diamond, 209 USPQ 1091 (D.D.C. 1981); Potter v. Dann, 201 USPQ 574 (D.D.C. 1978); Ex parte Murray, 1891 Dec. Comm'r Pat. 130, 131 (1891).

Even if petitioner had purchased a two-month extension of time when he filed a reply on March 23, 2009, petitioner still failed to file a proper reply to the November 20, 2008 final Office action. Petitioner is once again reminded that after a final action, there are only five possible replies: (1) a Notice of Appeal, (2) the filing of a continuing application, (3) a 37 CFR 1.129(a) submission, if appropriate, (4) an amendment after final that makes the case ready for issuance or (4) an RCE. To be a proper reply, an amendment after final must eliminate all of the Examiner's objections and rejections, and thus place the case in *prima facie* condition for allowance.

Petitioner's amendment after final, filed March 23, 2009, failed to eliminate all of the Examiner's rejections, as explained in the May 12, 2009 Advisory action. The rules of practice are clear that prosecution of an application to save it from abandonment must include such complete and proper action as the condition of the case may require. The admission of an amendment not responsive to the last Office action, or refusal to admit the same, shall not operate to save the application from abandonment. "[T]he admission of, or refusal to admit, any amendment after final rejection, and any proceedings relative thereto, shall not operate to relieve the application or patent under reexamination from its condition as subject to appeal or to save the application from abandonment under § 1.135." See 37 CFR 1.116(a).

The application became abandoned because petitioner submitted a late and improper reply to the final Office action.

The petition under 37 CFR 1.137(a) is dismissed.

The undersigned suggests that petitioner file a petition stating that the delay was unintentional. Public Law 97-247, § 3, 96 Stat. 317 (1982), which revised patent and trademark fees, amended 35 U.S.C. § 41(a)(7) to provide for the revival of an "unintentionally" abandoned application without a showing that the delay in prosecution or in late payment of the issue fee was "unavoidable." This amendment to 35 U.S.C. § 41(a)(7) has been implemented in 37 CFR 1.137(b).

The filing of a petition under 37 CFR 1.137(b) cannot be intentionally delayed and therefore must be filed promptly. A person seeking revival due to unintentional delay cannot make a statement that the delay was unintentional unless the entire delay, including the date it was discovered that the application was abandoned until the filing of the petition to revive under 37

CFR 1.137(b), was unintentional. A statement that the delay was unintentional is not appropriate if petitioner intentionally delayed the filing of a petition for revival under 37 CFR 1.137(b).

A form for filing a petition to revive an unintentionally abandoned application accompanies this decision for petitioner's convenience. If petitioner desires to file a petition under 37 CFR 1.137(b) instead of filing a request for reconsideration, petitioner must complete the enclosed petition form (PTO/SB/64) and pay the petition fee. The current Rule 137(b) petition fee is $810.00. The $45.00 credit for the partial one-month extension of time paid on February 23, 2009 can be applied toward this fee, if petitioner requests it.

Petitioner may wish to consider hiring a registered patent attorney or agent to assist in the prosecution of this application. Additionally, petitioner is encouraged to contact the Inventors Assistance Center (IAC) by telephone at 800-786-9199 or 571-272-1000, Monday through Friday from 8:30 AM to 5:30 PM (EST). The IAC provides patent information and services to the public and is staffed by former Supervisory Patent Examiners and experienced Primary Examiners who answer general questions concerning patent examining policy and procedure.

The file does not indicate a change of address has been submitted, although the address given on the petition differs from the address of record. If appropriate, a change of address should be filed in accordance with MPEP 601.03. A courtesy copy of this decision is being mailed to the address given on the petition; however, the Office will mail all future correspondence solely to the address of record.

Further correspondence with respect to this matter should be addressed as follows:

By mail: Mail Stop Petition
Commissioner for Patents
P.O. Box 1450
Alexandria, VA 22313-1450

By FAX: (571) 273-8300
Attn: Office of Petitions

By hand: Customer Service Window
Randolph Building
401 Dulany Street
Alexandria, VA 22314

Telephone inquiries concerning this decision should be directed to the undersigned at (571) 272-3230.

Shirene Willis Brantley

Shirene Willis Brantley
Senior Petitions Attorney
Office of Petitions

Enclosures: Petition For Revival Of An Application For Patent Abandoned Unintentionally Under 37 CFR 1.137(b); Form PTO/SB/64, Privacy Act Statement

CC: GEORGE G. JACKSON
P.O. BOX 791
PROVIDENCE RI 02901

UNITED STATES PATENT AND TRADEMARK OFFICE

Commissioner for Patents
United States Patent and Trademark Office
P.O. Box 1450
Alexandria, VA 22313-1450
www.uspto.gov

MAILED

FEB 19 2010

OFFICE OF PETITIONS

GEORGE G. JACKSON
P.O. BOX 502
NORTH WILKESBORO, NC 28659

In re Application of	:	
George Gregory Jackson	:	
Application No. 10/898,212	:	ON PETITION
Filed: November 26, 2004	:	
Attorney Docket No.	:	

This is a decision on the petition under 37 CFR 1.137(b), filed November 16, 2009, to revive the above-identified application.

The petition is **DISMISSED.**

Any request for reconsideration of this decision must be submitted within TWO (2) MONTHS from the mail date of this decision. Extensions of time under 37 CFR 1.136(a) are permitted. The reconsideration request should include a cover letter entitled "**Renewed Petition under 37 CFR 1.137(b)**." This is **not** final agency action within the meaning of 5 U.S.C. § 704.

A grantable petition under 37 CFR 1.137(b) must be accompanied by: (1) the required reply, unless previously filed; (2) the petition fee as set forth in 37 CFR 1.17(m); (3) a statement that the entire delay in filing the required reply from the due date for the reply until the filing of a grantable petition pursuant to 37 CFR 1.137(b) was unintentional; and (4) any terminal disclaimer (and fee as set forth in 37 CFR 1.20(d)) required by 37 CFR 1.137(c). Where there is a question as to whether either the abandonment or the delay in filing a petition under 37 CFR 1.137 was unintentional, the Commissioner may require additional information. See MPEP 711.03(c)(III)(C) and (D). The instant petition lack(s) item(s) (1).

The application became abandoned for failure to timely file a reply within the meaning of 37 CFR 1.113 to the final Office action of November 20, 2008. The proposed reply required for consideration of a petition to revive must be a Notice of Appeal (and appeal fee required by 37 CFR 41.20(b)(2)), an amendment that *prima facie* places the application in condition for allowance, a Request for Continued Examination (RCE) and submission (37 CFR 1.114), or the filing of a continuing application under 37 CFR 1.53(b). *See* MPEP 711.03(c)(III)(A)(2). Since the amendment submitted does not *prima facie* place the application in condition for allowance, the reply required must be a Notice of Appeal (and appeal fee), RCE, or the filing of a continuing application under 37 CFR 1.53(b).

The file does not indicate a change of address has been submitted, although the address given on the petition differs from the address of record. If appropriate, a change of address should be filed in accordance with MPEP 601.03. A courtesy copy of this decision is being mailed to the address given on the petition; however, the Office will mail all future correspondence solely to the address of record.

Further correspondence with respect to this matter should be addressed as follows:

By mail: Mail Stop PETITION
Commissioner for Patents
Post Office Box 1450
Alexandria, VA 22313-1450

By hand: Customer Service Window
Randolph Building
401 Dulany Street
Alexandria, VA 22314

By facsimile: (571) 273-8300
ATTN: Office of Petitions

Telephone inquiries concerning this decision should be directed to the undersigned at (571) 272-3210.

Irvin Dingle
Petitions Examiner
Office of Petitions

cc: George G. Jackson
P.O. Box 3263
Woonsocket, RI 02895

Attachment: Advisory Action

Advisory Action Before the Filing of an Appeal Brief	Application No.	Applicant(s)	
	10/898,212	JACKSON, GEORGE GREGORY	
	Examiner	Art Unit	
	BENJAMIN BUSS	2129	

--The MAILING DATE of this communication appears on the cover sheet with the correspondence address --

THE REPLY FILED 16 November 2009 FAILS TO PLACE THIS APPLICATION IN CONDITION FOR ALLOWANCE.

1. ☒ The reply was filed after a final rejection, but prior to or on the same day as filing a Notice of Appeal. To avoid abandonment of this application, applicant must timely file one of the following replies: (1) an amendment, affidavit, or other evidence, which places the application in condition for allowance; (2) a Notice of Appeal (with appeal fee) in compliance with 37 CFR 41.31; or (3) a Request for Continued Examination (RCE) in compliance with 37 CFR 1.114. The reply must be filed within one of the following time periods:
   a) ☒ The period for reply expires 3 months from the mailing date of the final rejection.
   b) ☐ The period for reply expires on: (1) the mailing date of this Advisory Action, or (2) the date set forth in the final rejection, whichever is later. In no event, however, will the statutory period for reply expire later than SIX MONTHS from the mailing date of the final rejection.

   Examiner Note: If box 1 is checked, check either box (a) or (b). ONLY CHECK BOX (b) WHEN THE FIRST REPLY WAS FILED WITHIN TWO MONTHS OF THE FINAL REJECTION. See MPEP 706.07(f).

Extensions of time may be obtained under 37 CFR 1.136(a). The date on which the petition under 37 CFR 1.136(a) and the appropriate extension fee have been filed is the date for purposes of determining the period of extension and the corresponding amount of the fee. The appropriate extension fee under 37 CFR 1.17(a) is calculated from: (1) the expiration date of the shortened statutory period for reply originally set in the final Office action; or (2) as set forth in (b) above, if checked. Any reply received by the Office later than three months after the mailing date of the final rejection, even if timely filed, may reduce any earned patent term adjustment. See 37 CFR 1.704(b).

NOTICE OF APPEAL

2. ☐ The Notice of Appeal was filed on _____. A brief in compliance with 37 CFR 41.37 must be filed within two months of the date of filing the Notice of Appeal (37 CFR 41.37(a)), or any extension thereof (37 CFR 41.37(e)), to avoid dismissal of the appeal. Since a Notice of Appeal has been filed, any reply must be filed within the time period set forth in 37 CFR 41.37(a).

AMENDMENTS

3. ☒ The proposed amendment(s) filed after a final rejection, but prior to the date of filing a brief, will not be entered because
   (a) ☒ They raise new issues that would require further consideration and/or search (see NOTE below);
   (b) ☐ They raise the issue of new matter (see NOTE below);
   (c) ☐ They are not deemed to place the application in better form for appeal by materially reducing or simplifying the issues for appeal; and/or
   (d) ☐ They present additional claims without canceling a corresponding number of finally rejected claims.

   NOTE: *See Continuation Sheet*. (See 37 CFR 1.116 and 41.33(a)).
4. ☐ The amendments are not in compliance with 37 CFR 1.121. See attached Notice of Non-Compliant Amendment (PTOL-324).
5. ☐ Applicant's reply has overcome the following rejection(s): _____.
6. ☐ Newly proposed or amended claim(s) _____ would be allowable if submitted in a separate, timely filed amendment canceling the non-allowable claim(s).
7. ☐ For purposes of appeal, the proposed amendment(s): a) ☐ will not be entered, or b) ☐ will be entered and an explanation of how the new or amended claims would be rejected is provided below or appended.
   The status of the claim(s) is (or will be) as follows:
   Claim(s) allowed: _____.
   Claim(s) objected to: _____.
   Claim(s) rejected: _____.
   Claim(s) withdrawn from consideration: _____.

AFFIDAVIT OR OTHER EVIDENCE

8. ☐ The affidavit or other evidence filed after a final action, but before or on the date of filing a Notice of Appeal will not be entered because applicant failed to provide a showing of good and sufficient reasons why the affidavit or other evidence is necessary and was not earlier presented. See 37 CFR 1.116(e).
9. ☐ The affidavit or other evidence filed after the date of filing a Notice of Appeal, but prior to the date of filing a brief, will not be entered because the affidavit or other evidence failed to overcome all rejections under appeal and/or appellant fails to provide a showing a good and sufficient reasons why it is necessary and was not earlier presented. See 37 CFR 41.33(d)(1).
10. ☐ The affidavit or other evidence is entered. An explanation of the status of the claims after entry is below or attached.

REQUEST FOR RECONSIDERATION/OTHER

11. ☒ The request for reconsideration has been considered but does NOT place the application in condition for allowance because: See Continuation Sheet.
12. ☐ Note the attached Information *Disclosure Statement*(s). (PTO/SB/08) Paper No(s). _____
13. ☐ Other: _____.

Continuation of 3. NOTE: Claims 1,7, & 10 now appear to contain new limitations which have not been previously searched or considered.

Continuation of 11. does NOT place the application in condition for allowance because: The amendment does not adhere to MPEP §714.II.C.(A)-(C), and the issues detailed in the Final Rejection mailed 11/20/2008 have not been overcome. Applicant's arguments filed 11/16/2009 have been considered, but are not persuasive. In Re page 1, Applicant argues that the invention does not preempt all possible detection of events (past, present, and future) and responses thereto. Examiner disagrees. Applicant has not established a single example of event detection that would not be covered by the current wording of at least the independent claim. Examiner reminds Applicant that the claims and only the claims determine the metes and bounds of the claimed invention. The outstanding rejection under 35 U.S.C. §101 is properly maintained. In Re page 2, Applicant argues that the rejection of claims 7 and 10 has been overcome by the present amendment. Examiner disagrees. Examiner sees no text indicated as altered in the present claim, using the required conventions spelled out in detail in MPEP §714.II.C.(A)-(C), which *requires* that deleted text appear as striken and newly presented text appear underlined. Furturemore, these claims still no not read as coherent or proper. Each claim must be exactly one sentence (containing exactly one period, which ends the claim). Examiner is not sure if enumerations 7.1, 7.2, 10.1, 10.1.1, 10.1.2, etc. are intended to be distinct claims or limitations of the claims 7 and 10, but either way, they are not presently in condition for allowance. The outstanding rejection under 35 U.S.C. §112, second paragraph, is properly maintained. In Re pages 2-6, Applicant argues that "Sheikh descbribes how it uses something similar as to inventors claim but does not claim to invent it" and that the subject matter claimed in the instant invention is not found in the claims of Sheikh. Examiner points out that the recited prior art need not be by the actual inventor of the subject matter of the instant claims in order to anticipate the claims. A claim is anticipated if the prior art describes or discloses the limitations of the instant claims, which Applicant has admitted Sheikh does repetitively througout pages 3-6. The questions of what Sheikh has actually invented, claims to invent, or puts into the claim limitations are not necessary for the examination of the instant application. In examination, the question is whether the prior art describes or discloses the subject matter found in limitations of the claims being examined. Examiner finds that Sheikh anticipates the instant claims as detailed in the Final Rejection mailed 11/20/2008. The outstanding rejection under 35 U.S.C. §102 is properly maintained. Therefore, as claims remain rejected, the present appication is not in condition for allowance.

UNITED STATES PATENT AND TRADEMARK OFFICE

COMMISSIONER FOR PATENTS
UNITED STATES PATENT AND TRADEMARK OFFICE
P.O. BOX 1450
ALEXANDRIA, VA 22313-1450
www.uspto.gov

ANTONELLI, TERRY, STOUT & KRAUS, LLP
1300 NORTH SEVENTEENTH STREET
SUITE 1800
ARLINGTON, VA 22209-3873

MAILED

SEP 3 0 2005

Technology Center 2100

In re Application of: SAIKA, et al.
Application No. 10/898,225
Filed: July 26, 2004
For: BACKUP METHOD, STORAGE SYSTEM, AND PROGRAM FOR BACKUP

DECISION ON PETITION TO MAKE SPECIAL (ACCELERATED EXAMINATION) UNDER M.P.E.P. §708.02 (VIII)

This is a response to the petition filed 23 August 2005 under 37 C.F.R. §1.102(d) and M.P.E.P. §708.02 (VIII): Accelerated Examination, to make the above-identified application special.

The Petition is **DISMISSED**.

M.P.E.P. §708.02, Section VIII which sets out the prerequisites for a grantable petition for Accelerated Examination under 37 C.F.R. §1.102(d) states in relevant part:

A new application (one which has not received any examination by the examiner) may be granted special status provided that applicant (and this term includes applicant's attorney or agent) complies with each of the following items:

(a) Submits a petition to make special accompanied by the fee set forth in **37 CFR 1.17(h)**;

(b) Presents all claims directed to a single invention, or if the Office determines that all the claims presented are not obviously directed to a single invention, will make an election without traverse as a prerequisite to the grant of special status;

(c) Submits a statement(s) that a pre-examination search was made, listing the field of search by class and subclass, publication, Chemical Abstracts, foreign patents, etc. The pre-examination search must be directed to the invention as claimed in the application for which special status is requested. A search made by a foreign patent office satisfies this requirement;

(d) Submits one copy each of the references deemed most closely related to the subject matter encompassed by the claims if said references are not already of record; and

(e) Submits a detailed discussion of the references, which discussion points out, with the particularity required by 37 CFR 1.111 (b) and (c), how the claimed subject matter is patentable over the references.

In those instances where the request for this special status does not meet all the prerequisites set forth above, **applicant will be notified and the defects in the request will be stated**. The application will remain in the status of a new application awaiting action in its regular turn. In those instances where a request is defective in one or more respects, applicant will be given one opportunity to perfect the request in a renewed petition to make special. If perfected, the request will then be granted. If not perfected in the first renewed petition, any additional renewed petitions to make special may or may not be considered at the discretion of the Technology Center (TC) Special Program Examiner.

The petition filed 23 August 2005 fails to adequately meet requirement (e) of the criteria set forth above. The discussion of the references does not point out with the particularity required by 37 CFR 1.111(b) and (c) how the claimed subject matter is patentable over the references. The petition identifies a numbered feature for each independent claim (a first feature of independent claim 1, . . ., a fifth feature of independent claim 10). There is also a statement for each of the references deemed most closely related that the reference fails to teach or suggest each of the numbered features. The petition also includes highlighted features of the claims (pages 17-21 of the petition) and a statement for each of the references deemed most closely related that these highlighted features are not taught or suggested by the reference. The highlighted features and the numbered features are of different scope. Additionally, the highlighted features are not a subset of the numbered features and the numbered features are not a subset of the highlighted features. Thus, the petition is confusing as to whether the highlighted features are intended to distinguish the references or whether the numbered features are intended to distinguish the references. Clarification is required.

Also, for claims 6, 8, and 10, the highlighted limitations include essentially all of the limitations of each independent claim. I.e., the statement purports that essentially the entirety of each independent claim is not taught by any of the references most closely related. Such a statement is not a sufficient detailed description. For claims 1 and 2, even if the numbered features do not include essentially all of the limitations of these claims, they include so many limitations that these too are an insufficient statement of how the claimed subject matter is patentable over the references.

Further, on page 8 of the petition, it is stated that "although the distinguishing feature(s) may represent a substantial portion of the claimed invention, the claimed invention including the feature(s) and their inter-operation provides a novel backup method, storage system, and program for backup." However, it is not clear what is intended by this statement. The statement fails to explain why "the distinguishing feature(s) may represent a substantial portion of the claimed invention".

Finally, it is suggested that if the identical statement is being made to distinguish each reference from an independent claim, as in the instant petition, then the statement should simply be made once in the petition. (E.g., "Regarding independent claim 1, none of the references disclose . . . .")

Petition to Make Special **DISMISSED**.

Petitioner is given one opportunity to perfect the petition. Any request for reconsideration must be filed within TWO MONTHS of the mail date of this decision.

Until the renewed petition is submitted, the application will be returned to the examiner's docket to await treatment on the merits in the normal order of examination.

Pinchus M. Laufer
Special Program Examiner
Technology Center 2100
Computer Architecture, Software and Information Security
571-272-3599

ds

UNITED STATES PATENT AND TRADEMARK OFFICE

COMMISSIONER FOR PATENTS
UNITED STATES PATENT AND TRADEMARK OFFICE
P.O. BOX 1450
ALEXANDRIA, VA 22313-1450
www.uspto.gov

ANTONELLI, TERRY, STOUT & KRAUS, LLP
1300 NORTH SEVENTEENTH STREET
SUITE 1800
ARLINGTON, VA 22209-3873

MAILED
DEC 27 2005
Technology Center 2100

In re Application of: SAIKA, et al.
Application No. 10/898,225
Filed: July 26, 2004
For: BACKUP METHOD, STORAGE SYSTEM, AND PROGRAM FOR BACKUP

DECISION ON PETITION TO MAKE SPECIAL (ACCELERATED EXAMINATION) UNDER M.P.E.P. §708.02 (VIII)

This is a response to the renewed petition filed 29 November 2005, under 37 C.F.R. §1.102(d) and M.P.E.P. §708.02 (VIII): Accelerated Examination, to make the above-identified application special.

The renewed petition was filed in response to a dismissal of the original petition filed 23 August 2005. The petition was dismissed for failure to provide a detailed discussion of the references, which discussion points out with the particularity required by 37 CFR 1.111(b) and (c), how the claimed subject matter is patentable over the references.

Applicants' submission filed 29 November 2005 corrects the deficiency noted in the original decision. The combined submissions meet all the criteria set out in the original decision. Accordingly, the petition is **GRANTED**.

The application file is being forwarded to the Examiner of Record for accelerated examination according to the procedures set forth in MPEP § 708.02, Section VIII.

Pinchus M. Laufer
Special Program Examiner
Technology Center 2100
Computer Architecture, Software and Information Security
571-272-3599

ds

UNITED STATES PATENT AND TRADEMARK OFFICE

UNITED STATES DEPARTMENT OF COMMERCE
United States Patent and Trademark Office
Address: COMMISSIONER FOR PATENTS
P.O. Box 1450
Alexandria, Virginia 22313-1450
www.uspto.gov

INTELLECTUAL PROPERTY MANAGEMENT
BOEING MANAGEMENT COMPANY
P.O. BOX 2515
MAIL CODE 110-SD54
SEAL BEACH, CA 90740-1515

Mail Date: 04/20/2010

Applicant	: Mostafa Rassaian	: DECISION ON REQUEST FOR
Patent Number	: 7623994	: RECALCULATION of PATENT
Issue Date	: 11/24/2009	: TERM ADJUSTMENT IN VIEW
Appliction No	: 10/898,235	: OF WYETH AND NOTICE OF INTENT TO
Filed	: 07/26/2004	: ISSUE CERTIFICATE OF CORRECTION
		:

The Request for Recalculation is **GRANTED** to the extent indicated.

The patent term adjustment has been determined to be **1421** days. The USPTO will *sua sponte* issue a certificate of correction reflecting the amount of PTA days determined by the recalculation.

Prior to the issuance of the certificate of correction, the USPTO will afford patentee an opportunity to be heard and request reconsideration. Accordingly, patentee has **one month or thirty (30) days**, whichever is longer, to file a request for reconsideration of this patent term adjustment calculation. See 35 U.S.C. 154(b)(3)(B)(ii) and 37 CFR 1.322(a)(4). No extensions of time will be granted under 37 CFR 1.136.

Patentee should use document code PET.OP if electronically filing a request for reconsideration of this patent term adjustment calculation. The patentee must also include the information required by 37 CFR 1.705(b)(2) and the fee required by 37 CFR 1.18(e). If patentee does not file a timely request for reconsideration of this patent term adjustment calculation including the information required by 37 CFR 1.705(b)(2) and the fee required by 37 CFR 1.18(e), the USPTO will issue a certificate of correction reflecting the PTA determination noted above.

Patentee should be aware that in order to preserve the right to review in the United States District Court for the District of Columbia of the USPTO patent term adjustment determination, patentee must ensure that he or she also take the steps required under 35 U.S.C. 154(b)(4)(A) in a timely manner. Nothing in the request for recalculation should be construed as providing an alternative time frame for commencing a civil action under 35 U.S.C. 154(b)(4)(A).

Any questions concerning this decision should be directed to the Office of Patent Legal Administration at 571-272-7702.

UNITED STATES PATENT AND TRADEMARK OFFICE

Commissioner for Patents
United States Patent and Trademark Office
P.O. Box 1450
Alexandria, VA 22313-1450
www.uspto.gov
DIW 11-04

DICKSTEIN SHAPIRO MORIN & OSHINSKY LLP
2101 L STREET, NW
WASHINGTON DC 20037

COPY MAILED

NOV 1 6 2004

OFFICE OF PETITIONS

In re Application of	:	
Itabashi et al.	:	
Application No. 10/898,282	:	ON PETITION
Filed: 26 July, 2004	:	
Atty Docket No. A8319.0014P014-A	:	

This is a decision on the petition filed on 20 October, 2004, requesting that the above-identified application be accorded a filing date of 26 July, 2004, with Page 77 of the specification as a part of the original disclosure.

The petition is granted.

On 26 July, 2004, the application was filed.

Accordingly, on 30 September, 2004, Initial Patent Examination Division mailed a Notice of Omitted Item(s) in a Nonprovisional Application, stating that the application had been accorded a filing date of 26 July, 2004, but that Page 77 of the specification (description and claims) appeared to have been omitted.

In response, on 20 October, 2004, the present petition and Page 77 of the specification were filed. Petitioners argue that Page 77 of the specification was filed with the other application papers on 26 July, 2004, but was subsequently misplaced in the U.S. Patent and Trademark Office (Office). In support, a copy of petitioners' postcard receipt was supplied with the present petition. The postcard receipt shows an "Office-date" stamp of 26 July, 2004, and identifies the application by the first named inventor's name, invention title, and attorney docket number, and acknowledges receipt of, *inter alia*, "Specification (84 pages)". Petitioners request that the application, including Page 77 of the specification, be accorded a filing date of 26 July, 2004.

A review of the record reveals that no Page 77 of the specification have been located among the application papers received on 26 July, 2004. However, the evidence is convincing that the application papers deposited on 26 July, 2004, included Page 77 of the specification (including the abstract), which was subsequently misplaced in the Office. Therefore, the application, including Page 77 of the specification, is entitled to a filing date of 26 July, 2004.

The "Notice" mailed on 30 September, 2004, is vacated.

In view of the above, the petition is granted. The petition fee of $130.00 is unnecessary and will be refunded to counsel's deposit account, No. 04-1073.

The application will be processed with the copy of Page 77 of the specification supplied on 20 October, 2004, as a part of the original disclosure.

The application is being referred to Initial Patent Examination Division for further processing with a filing date of 26 July, 2004, using the application papers filed on that date, and the copy of Page 77 of the specification supplied with the present petition.

Telephone inquires should be directed to the undersigned at 571-272-3231.

D Wood

Douglas I. Wood
Senior Petitions Attorney
Office of Petitions

UNITED STATES PATENT AND TRADEMARK OFFICE

Commissioner for Patents
United States Patent and Trademark Office
P.O. Box 1450
Alexandria, VA 22313-1450
www.uspto.gov

BROUSE MCDOWELL LPA
388 SOUTH MAIN STREET
SUITE 500
AKRON OH 44311

COPY MAILED

DEC 0 8 2008

In re Application of	:	
Dave Herman	:	
Application No. 10/898,296	:	DECISION ON PETITION
Filed: July 23, 2004	:	TO WITHDRAW
Attorney Docket No. 20827.26503	:	FROM RECORD
	:	

This is a decision on the Request to Withdraw as attorney or agent of record under 37 C.F.R. § 1.36(b), filed June 11, 2008.

The request is **NOT APPROVED**.

A grantable request to withdraw as attorney/agent of record must be signed by every attorney/agent seeking to withdraw or contain a clear indication that one attorney is signing on behalf of another/others. A request to withdraw will not be approved unless at least 30 (thirty) days would remain between the date of approval and the later of the expiration date of a time to file a response or the expiration date of the maximum time period which can be extended under 37 C.F.R. § 1.136(a).

The request cannot be approved because petitioner has not certified that he has notified the client of any responses that may be due and the time frame within which the client must respond. Practitioners are not permitted to withdraw from representation as practitioners of record unless all the certifications are made. It is also noted that submitting false certification may violate a practitioner's duty under 37 CFR 10.23(b)(4) and (b)(5).

All future communications from the Office will continue to be directed to the above-listed address until otherwise notified by applicant.

Telephone inquiries concerning this decision should be directed to undersigned at 571-272-1642.

/AMW/
April M. Wise
Petitions Examiner
Office of Petitions

Enclosure: Form/PTO/SB/83

cc: DAVE HERMAN
HERMAN & SHAWVER PARTNERSHIP
2326 GREENVIEW CIRCLE, NW
APARTMENT #1
CANTON, OH 44708

UNITED STATES PATENT AND TRADEMARK OFFICE

Commissioner for Patents
United States Patent and Trademark Office
P.O. Box 1450
Alexandria, VA 22313-1450
www.uspto.gov

EDELL, SHAPIRO & FINNAN, LLC
1901 RESEARCH BOULEVARD
SUITE 400
ROCKVILLE MD 20850

COPY MAILED

AUG 16 2006

OFFICE OF PETITIONS

In re Application of :
Paul Andrew Kelly et al. :
Application No. 10/898,321 : ON PETITION
Filed: July 26, 2004 :
Attorney Docket No. 1332.0191CNT :

This is a decision on the petition filed April 12, 2006 under 37 CFR 1.137(b),[1] to revive the above-identified application.

The petition under 37 CFR 1.137 (b) is **GRANTED**.

This application became abandoned March 28, 2006 for failure to timely pay the issue fee on or before March 27, 2006. The instant petition and this decision precede the mailing of the Notice of Abandonment.

The issue fee, publication fee and petition fee have all been applied. All other requirements of 37 CFR 1.137(b) having now been met, this application file is being forwarded to the Publishing Division to be processed into a patent.

Telephone inquiries concerning this matter may be directed to the undersigned Petitions Attorney at (571) 272-3212.

Patricia Faison-Ball

Patricia Faison-Ball
Senior Petitions Attorney
Office of Petitions

---

[1]Effective December 1, 1997, the provisions of 37 CFR 1.137(b) now provide that where the delay in reply was unintentional, a petition may be filed to revive an abandoned application or a lapsed patent pursuant to 37 CFR 1.137(b). A grantable petition filed under the provisions of 37 CFR 1.137(b) must be accompanied by:

(1) the required reply, unless previously filed. In a nonprovisional application abandoned for failure to prosecute, the required reply may be met by the filing of a continuing application. In a nonprovisional application filed on or after June 8, 1995, and abandoned for failure to prosecute, the required reply may also be met by the filing of a request for continued examination in compliance with § 1.114. In an application or patent, abandoned or lapsed for failure to pay the issue fee or any portion thereof, the required reply must be the payment of the issue fee or any outstanding balance thereof.

(2) the petition fee as set forth in 37 CFR 1.17(m);

(3) a statement that the entire delay in filing the required reply from the due date for the reply until the filing of a grantable petition pursuant to 37 CFR 1.137(b) was unintentional. The Commissioner may required additional information where there is a question whether the delay was unintentional; and

(4) any terminal disclaimer (and fee as set forth in 37 CFR 1.20(d)) required pursuant to 37 CFR 1.137(c)).

UNITED STATES PATENT AND TRADEMARK OFFICE

UNITED STATES DEPARTMENT OF COMMERCE
United States Patent and Trademark Office
Address: COMMISSIONER FOR PATENTS
P.O. Box 1450
Alexandria, Virginia 22313-1450
www.uspto.gov

APPLICATION NO.	FILING DATE	FIRST NAMED INVENTOR	ATTORNEY DOCKET NO.	CONFIRMATION NO.
10/898,330	07/26/2004	Shozo Isobe	254546US2RD	4223

22850 7590 06/05/2008
OBLON, SPIVAK, MCCLELLAND MAIER & NEUSTADT, P.C.
1940 DUKE STREET
ALEXANDRIA, VA 22314

EXAMINER
KIM, CHONG HWA

ART UNIT	PAPER NUMBER
3682	

NOTIFICATION DATE	DELIVERY MODE
06/05/2008	ELECTRONIC

Please find below and/or attached an Office communication concerning this application or proceeding.

The time period for reply, if any, is set in the attached communication.

Notice of the Office communication was sent electronically on above-indicated "Notification Date" to the following e-mail address(es):

patentdocket@oblon.com
oblonpat@oblon.com
jgardner@oblon.com

UNITED STATES PATENT AND TRADEMARK OFFICE

Commissioner for Patents
United States Patent and Trademark Office
P.O. Box 1450
Alexandria, VA 22313-1450
www.uspto.gov

OBLON, SPIVAK, MCCLELLAND MAIER & NEUSTADT, P.C.
1940 DUKE STREET
ALEXANDRIA VA 22314

MAILED
FROM DIRECTORS OFFICE

JUN 04 2008

TECHNOLOGY CENTER 3600

In re Application of:
ISOBE
Application. No. 10/898,330
Filed: July 26, 2004
For: CONTENT RETRIEVING DEVICE AND CONTENTS RETRIEVING METHOD

DECISION ON PETITON TO UNDER 37 CFR 1.181

This is a decision on Applicant's Petition under 37 CFR 1.181 filed on January 25, 2008 to have considered the Information Disclosure Statement (IDS) that was filed on July 26, 2004.

The Petition is **GRANTED**.

A review of the record indicates that on July 26, 2004, Applicant filed an IDS under 37 CFR § 1.97 together with two references and the Statement of Relevancy. The Office Action dated July 16, 2007 stated that the IDS filed July 26, 2004 fails to comply with the provisions of 37 CFR 1.97, 1.98 and MPEP § 609 because the IDS having the foreign reference as indicated in AO on the PTO-1449 failed to include a concise explanation of the relevancy as required in MPEP 609.04(a) (III), and that the Statement of Relevancy filed along with the IDS is not a concise explanation of the relevance.

In response, Applicant noted in the Remarks/Arguments section of the Amendment under 37 C.F.R. § 1.111 filed October 3, 2007 that the Statement of Relevancy, regarding reference AO on the IDS filed July 26, 2004 (i.e., Japanese Patent Document 2003-122773) recites "*This discloses a similar metadata- searching system. But the central metadata does not have reference links to the local metadatas.*"

According to MPEP §609.04(a) (III), an IDS must include a concise explanation of the relevance of a non-English language information reference and further indicates that the statement of relevancy "might be a simple statement pointing to similarities between the item of information and the claimed invention." The applicant's statement in the Statement of Relevancy (i.e., "*This discloses a similar metadata- searching system. But the central metadata does not have reference links to the local metadatas.*") suffices

and provides for the requirements under MPEP §609.04(a)(III), and satisfies the provisions of 37 CFR §§1.97, 1.98, and MPEP §609

SUMMARY: The Petition is GRANTED.

The application will be returned to the examiner for immediate action.

Any questions regarding this decision should be directed to Supervisory Patent Examiner Richard Ridley at 571-272-6917.

Katherine Matecki

Kathy Matecki, Director
Patent Technology Center 3600
571-272-5250

UNITED STATES PATENT AND TRADEMARK OFFICE

Commissioner for Patents
United States Patent and Trademark Office
P.O. Box 1450
Alexandria, VA 22313-1450
www.uspto.gov

SUGHRUE MION, PLLC
2100 PENNSYLVANIA AVENUE, N.W.
SUITE 800
WASHINGTON, DC 20037

COPY MAILED

MAR 1 4 2008

OFFICE OF PETITIONS

In re Application of :
Katsuhisa Kitano et al :
Application No. 10/898,351 :
Filed: July 26, 2004 :
Attorney Docket No. Q82645 :

ON PETITION

This is a decision on the petition under 37 CFR 1.137(b), filed October 24, 2007, to revive the above-identified application.

The petition is **GRANTED**.

The two-month period for filing an appeal brief in triplicate (accompanied by the fee required by 37 CFR 1.17(c)), runs from the date of this decision.

The above-identified application became abandoned for failure to reply in a timely manner to the final Office action mailed March 28, 2007, which set a shortened statutory period for reply of three (3) months. Three-month extensions of time under the provisions of 37 CFR 1.136(a) were obtained. Accordingly, the above-identified application became abandoned on September 29, 2007.

Telephone inquiries concerning this decision should be directed to Irvin Dingle at (571) 272-3210.

This matter is being forwarded to Technology Center AU 1796 for further processing.

Irvin Dingle
Petitions Examiner
Office of Petitions

UNITED STATES PATENT AND TRADEMARK OFFICE

COMMISSIONER FOR PATENTS
UNITED STATES PATENT AND TRADEMARK OFFICE
P.O. BOX 1450
ALEXANDRIA, VA 22313-1450
www.uspto.gov

MATTINGLY, STANGER, MALUR & BRUNDIDGE, P.C.
1800 DIAGONAL ROAD
SUITE 370
ALEXANDRIA, VA 22314

MAILED

NOV - 8 2005

Technology Center 2100

In re Application of SAIKA et al	:	
Application No.: 10/898,356	:	DECISION ON PETITION
Filing Date: July 26, 2004	:	FOR ACCELERATED
For: STORAGE SYSTEM, STORAGE	:	EXAMINATION UNDER
DEVICE, AND REMOTE COPY	:	M.P.E.P. §708.02(VIII)
METHOD	:	

This is a decision on the petition filed September 15, 2005 under 37 CFR §1.102(d) and M.P.E.P. §708.02(VIII): Accelerated Examination, to make the above-identified application special.

The petition is **GRANTED**.

M.P.E.P. §708.02, Section VIII, which sets out the prerequisites for a grantable petition for Accelerated Examination under 37 CFR §1.102(d), states in relevant part:

> A new application (one which has not received any examination by the examiner) may be granted special status provided that applicant (and this term includes applicant's attorney or agent) complies with each of the following items:
>
> (A) Submits a petition to make special accompanied by the fee set forth in 37 CFR 1.17(h);
>
> (B) Presents all claims directed to a single invention, or if the Office determines that all the claims presented are not obviously directed to a single invention, will make an election without traverse as a prerequisite to the grant of special status. The election may be made by applicant at the time of filing the petition for special status. Should applicant fail to include an election with the original papers or petition and the Office determines that a requirement should be made, the established telephone restriction practice will be followed. If otherwise proper, examination on the merits will proceed on claims drawn to the elected invention. If applicant refuses to make an election without traverse, the application will not be further examined at that time. The petition will be denied on the ground that the claims are not directed to a single invention, and the application will await action in its regular turn. Divisional applications directed to the nonelected inventions will not automatically be given special status based on papers filed with the petition in the parent application. Each such application must meet on its own all requirements for the new special status;

(C) Submits a statement(s) that a pre-examination search was made, listing the field of search by class and subclass, publication, Chemical Abstracts, foreign patents, etc. >The pre-examination search must be directed to the invention as claimed in the application for which special status is requested.< A search made by a foreign patent office satisfies this requirement >if the claims in the corresponding foreign application are of the same or similar scope to the claims in the U.S. application for which special status is requested<;

(D) Submits one copy each of the references deemed most closely related to the subject matter encompassed by the claims if said references are not already of record; and

(E) Submits a detailed discussion of the references, which discussion points out, with the particularity required by 37 CFR 1.111 (b) and (c), how the claimed subject matter is patentable over the references.

Because the petition filed September 15, 2005 meets the criteria set forth above, the petition to make special is **GRANTED**.

The application file is being forwarded to the Examiner for accelerated examination in accordance with M.P.E.P. §708.02, Section VIII. If the application is subsequently allowed, it will be given priority for printing. See M.P.E.P. §1309.

Pinchus M. Laufer

Pinchus M. Laufer
Special Programs Examiner
Technology Center 2100
Computer Architecture, Software, and Information Security
571-272-3599

UNITED STATES PATENT AND TRADEMARK OFFICE

UNITED STATES DEPARTMENT OF COMMERCE
United States Patent and Trademark Office
Address: COMMISSIONER FOR PATENTS
P.O. Box 1450
Alexandria, Virginia 22313-1450
www.uspto.gov

STAAS & HALSEY LLP
SUITE 700
1201 NEW YORK AVENUE, N.W.
WASHINGTON, DC 20005

Mail Date: 04/21/2010

Applicant	: Junichi Ishibashi	: DECISION ON REQUEST FOR
Patent Number	: 7610612	: RECALCULATION of PATENT
Issue Date	: 10/27/2009	: TERM ADJUSTMENT IN VIEW
Appliction No	: 10/898,362	: OF WYETH AND NOTICE OF INTENT TO
Filed	: 07/26/2004	: ISSUE CERTIFICATE OF CORRECTION
		:

The Request for Recalculation is **GRANTED** to the extent indicated.

The patent term adjustment has been determined to be **1112** days. The USPTO will *sua sponte* issue a certificate of correction reflecting the amount of PTA days determined by the recalculation.

Prior to the issuance of the certificate of correction, the USPTO will afford patentee an opportunity to be heard and request reconsideration. Accordingly, patentee has **one month or thirty (30) days**, whichever is longer, to file a request for reconsideration of this patent term adjustment calculation. See 35 U.S.C. 154(b)(3)(B)(ii) and 37 CFR 1.322(a)(4). No extensions of time will be granted under 37 CFR 1.136.

Patentee should use document code PET.OP if electronically filing a request for reconsideration of this patent term adjustment calculation. The patentee must also include the information required by 37 CFR 1.705(b)(2) and the fee required by 37 CFR 1.18(e). If patentee does not file a timely request for reconsideration of this patent term adjustment calculation including the information required by 37 CFR 1.705(b)(2) and the fee required by 37 CFR 1.18(e), the USPTO will issue a certificate of correction reflecting the PTA determination noted above.

Patentee should be aware that in order to preserve the right to review in the United States District Court for the District of Columbia of the USPTO patent term adjustment determination, patentee must ensure that he or she also take the steps required under 35 U.S.C. 154(b)(4)(A) in a timely manner. Nothing in the request for recalculation should be construed as providing an alternative time frame for commencing a civil action under 35 U.S.C. 154(b)(4)(A).

Any questions concerning this decision should be directed to the Office of Patent Legal Administration at 571-272-7702.

UNITED STATES PATENT AND TRADEMARK OFFICE

COMMISSIONER FOR PATENTS
UNITED STATES PATENT AND TRADEMARK OFFICE
P.O. BOX 1450
ALEXANDRIA, VA 22313-1450
www.uspto.gov

FINNEGAN, HENDERSON, FARABOW, GARRETT & DUNNER LLP
901 NEW YORK AVENUE, NW
WASHINGTON DC 20001-4413

COPY MAILED
FEB 23 2006
OFFICE OF PETITIONS

Applicant: Plos et al.
Appl. No.: 10/898,369
Filing Date: July 26, 2004
Title: PROCESS FOR DYEING KERATIN FIBERS WITH AT LEAST ONE NINHYDRIN DERIVATIVE
Attorney Docket No.: 06028.0054-00
Pub. No.: US 2005/0050654 A1
Pub. Date: March 10, 2005

This is a decision on the request for a corrected patent application publication under 37 CFR 1.221(b), filed on May 6, 2005, for the above-identified application.

The request is granted.

The corrected patent application publication will be published in due course, unless the patent issues before the application is republished.

Inquiries relating to this matter may be directed to Mark O. Polutta at (571) 272-7709 (voice).

Mark O. Polutta
Office of Patent Legal Administration
Office of the Deputy Commissioner
for Patent Examination Policy

UNITED STATES PATENT AND TRADEMARK OFFICE

Commissioner for Patents
United States Patent and Trademark Office
P.O. Box 1450
Alexandria, VA 22313-1450
www.uspto.gov
DIW 10-04

LERNER AND GREENBERG, PA
P O BOX 2480
HOLLYWOOD FL 33022-2480

COPY MAILED

OCT 1 9 2004

OFFICE OF PETITIONS

In re Application of	:
Dahle and Butz	: DECISION ACCORDING STATUS
Application No. 10/898,378	: UNDER 37 CFR 1.47(a)
Filed: 23 July, 2004	:
Atty Docket No TER-01174	:

This is in response to the petition under 37 CFR 1.47(a) filed on 14 September, 2004.

The petition is **GRANTED**.

Petitioners have shown that the non-signing inventor, Gerd Dahle, has refused to join in the filing of the above-identified application after having been sent a copy of the application papers. Specifically, the petitioners have established, via the declaration of Dietrich Tergau, that a copy of the above-identified application was sent to the non-signing inventor. The non-signing inventor, however, has failed to sign and return the declaration naming him as a joint inventor along with Jochen Butz.

The above-identified application and papers have been reviewed and found in compliance with 37 CFR 1.47(a). This application is hereby accorded Rule 1.47(a) status.

As provided in Rule 1.47(c), this Office will forward notice of this application's filing to the non-signing inventor at the address given in the in the petition, not the declaration. Notice of the filing of this application will also be published in the Official Gazette.

The declaration of Dietrich Tergau is being construed to mean that Mr. Tergau has personal knowledge that a copy of the application papers were sent to the non-signing inventor. Petitioners **must** inform the Office if this is an incorrect interpretation.

The application is being forwarded to the Office of Initial Patent Examination for further processing.

Telephone inquiries related to this decision should be directed to the undersigned at 571-272-3231.

Douglas I. Wood
Senior Petitions Attorney
Office of Petitions

UNITED STATES PATENT AND TRADEMARK OFFICE

COMMISSIONER FOR PATENTS
UNITED STATES PATENT AND TRADEMARK OFFICE
P.O. BOX 1450
ALEXANDRIA, VA 22313-1450
www.uspto.gov

COPY MAILED
OCT 04 2007
OFFICE OF PETITIONS

HEWLETT PACKARD COMPANY
P O BOX 272400, 3404 E. HARMONY ROAD
INTELLECTUAL PROPERTY ADMINISTRATION
FORT COLLINS, CO 80527-2400

In re Application of	:	
Andrew Koll, et al.	:	
Application No. 10/898,391	:	DECISION ON PETITION
Filed: July 24, 2004	:	
Attorney Docket No. 200400281-1	:	

This is a decision on the petition under 37 CFR 1.181, filed May 2, 2007, requesting withdrawal of the holding of abandonment in the above-identified application.

There is no indication that the person signing the instant petition was ever given a power of attorney or authorization of agent to prosecute the above-identified application. However, in accordance with 37 CFR 1.34(a), the signature of Michael J. D'Aurellio appearing on the petition shall constitute a representation to the United States Patent and Trademark Office that he is authorized to represent the particular party on whose behalf he acts. A courtesy copy of this decision is being mailed to petitioner. However, if Mr. D'Aurellio desires to receive future correspondence regarding this application, the appropriate power of attorney or authorization of agent must be submitted. All future correspondence regarding this application file will be directed solely to the address of record.

The petition is **GRANTED**.

This application was held abandoned for failure to reply to the non-final Office action mailed September 7, 2006, which set a three (3) month shortened statutory period for reply. A Notice of Abandonment was mailed on March 16, 2007.

Petitioner states that the Office action dated September 7, 2006 was not received. Petitioner argues that the Office action was not properly addressed to the address of record, since the Office action was returned to the USPTO as "undelivered."

A review of the written record does indicate an irregularity in the mailing of the Office action of September 7, 2006. In this regard, the Office action in question was returned to the U.S. Patent and Trademark Office on September 15, 2006 by the U.S. Postal Service for some unknown reason. Therefore the record supports a conclusion that the non-final Office action was not received by petitioner.

In view of the above, the Notice of Abandonment is hereby vacated.

This application is being referred to the Technology Center technical support staff of Art Unit 2853 for (1) withdrawing the holding of abandonment and (2) for appropriate action by the Examiner in the normal course of business on the reply received on May 2, 2007.

Sherry D. Brinkley
Petitions Examiner
Office of Petitions

cc: MICHAEL J. D'AURELLIO
THOMAS, KAYDEN, HORSTEMEYER & RISLEY, L.L.P.
100 GALLERIA PARKWAY
SUITE 1750
ATLANTA, GA 30339-5948

UNITED STATES PATENT AND TRADEMARK OFFICE

Commissioner for Patents
United States Patent and Trademark Office
P.O. Box 1450
Alexandria, VA 22313-1450
www.uspto.gov

HEWLETT PACKARD COMPANY
P.O.BOX 272400, 3404 E. HARMONY ROAD
INTELLECTUAL PROPERTY ADMINISTRATION
FORT COLLINS CO 80527-2400

COPY MAILED

NOV 0 8 2004

OFFICE OF PETITIONS

In re Application of :
Kwasny, et al. : DECISION GRANTING
Application No. 10/898,392 : PETITION
Filed: July 23, 2004 :
Attorney Docket No. 200400797-1 :

This is a decision on the petition under 37 CFR 1.10(d), filed August 13, 2004, requesting that the above-identified provisional application be accorded a filing date of July 23, 2004, rather than the presently accorded filing date of July 24, 2004.

The petition is **GRANTED**.

Applicants request the earlier filing date on the basis that the provisional application was purportedly deposited in Express Mail service (Express Mail mailing label #EL975358808US) on July 23, 2004, pursuant to the requirements of 37 CFR 1.10. However, the Express Mail mailing label identified in the original application papers indicates a "date-in" of July 24, 2004. Applicants allege that the date of mailing indicated by the Express Mail mailing label is a U.S. Postal Service (USPS) error and the correct date of mailing is July 23, 2004.

In support, the petition is accompanied by a copy of the register receipt from the Middle City Postal Store in Philadelphia, PA of the USPS that indicates the item with Express Mail label no. EL975358808US was placed into Express Mail service on July 23, 2004. Additionally, petitioner has submitted a printout from the USPS Track and Confirm web site that shows acceptance of the package bearing Express Mail #EL975358808US on July 23, 2004.

In view of the evidence present in the file, it is concluded that the "date-in" indicated on the Express Mail mailing label is incorrect and that the correct date of deposit in Express Mail service is July 23, 2004.

Accordingly, the application is entitled to a filing date of July 23, 2004.

The $130.00 petition fee, submitted August 13, 2004, will be refunded to deposit account no. 50-0573.

The application is being returned to the Office of Initial Patent Examination for further processing with a filing date of July 23, 2004.

Telephone inquiries concerning this matter may be directed to the undersigned at (571)272-3228.

Edward J. Tannouse
Petitions Attorney
Office of Petitions
United States Patent and Trademark Office

UNITED STATES PATENT AND TRADEMARK OFFICE

Commissioner for Patents
United States Patent and Trademark Office
P.O. Box 1450
Alexandria, VA 22313-1450
www.uspto.gov

AKERMAN SENTERFITT
P.O. BOX 3188
WEST PALM BEACH FL 33402-3188

COPY MAILED

APR 13 2007

OFFICE OF PETITIONS

In re Application of	:	
Volodymyr Red'ko, et al.	:	
Application No. 10/898,397	:	DECISION ON PETITION
Filed: July 23, 2004	:	
Attorney Docket No. 8326-2	:	

This is a decision on the petition under the unintentional provisions of 37 CFR 1.137(b), filed January 11, 2007, to revive the above-identified application.

The petition is **GRANTED**.

The application became abandoned for failure to reply in a timely manner to the non-final Office action mailed, July 11, 2005, which set a shortened statutory period for reply of three (3) months. No extensions of time under the provisions of 37 CFR 1.136(a) were obtained. Accordingly, the application became abandoned on October 12, 2005.

The petition satisfies the requirements of 37 CFR 1.137(b) in that petitioner has supplied (1) the reply in the form of an amendment, (2) the petition fee of $750; and (3) a proper statement of unintentional delay.

The application file does not indicate a change of address has been filed in this case, although the address given on the petition differs from the address of record. A change of address should be filed in this case in accordance with MPEP 601.03. A courtesy copy of this decision is being mailed to the address noted on the petition. However, until otherwise instructed, all future correspondence regarding this application will be mailed solely to the address of record.

Telephone inquiries concerning this decision should be directed to April Wise at (571) 272-1642.

This application is being referred to Technology Center AU 2858 for appropriate action by the Examiner in the normal course of business on the reply received January 11, 2007.

Irvin Dingle
Petitions Examiner
Office of Petitions

cc: AKERMAN SENTERFITT
222 LAKE VIEW AVENUE
SUITE 400
WEST PALM BEACH, FL 33401-6183

UNITED STATES PATENT AND TRADEMARK OFFICE

Commissioner for Patents
United States Patent and Trademark Office
P.O. Box 1450
Alexandria, VA 22313-1450
www.uspto.gov

AKERMAN SENTERFITT
PO BOX 3188
WEST PALM BEACH, FL 33402-3188

COPY MAILED

MAR 17 2008

OFFICE OF PETITIONS

In re Application of	:	
Volodymyr Red'ko, et al.	:	
Application No. 10/898,397	:	DECISION ON PETITION
Filed: July 23, 2004	:	TO WITHDRAW
Attorney Docket No. 8326-2	:	FROM RECORD
	:	

This is a decision on the Request to Withdraw as attorney or agent of record under 37 C.F.R. § 1.36(b) filed November 15, 2007.

The request is **DISMISSED** as moot.

A review of the file record indicates that the power of attorney to Akerman Senterfitt has been revoked by the assignee of the patent application on December 26, 2007. Accordingly, the request to withdraw under 37 C.F.R. § 1.36(b) is moot.

All future communications from the Office will continue to be directed to the below-listed address until otherwise notified by applicant.

Telephone inquires concerning this decision should be directed to undersigned at 571-272- 1642.

April M. Wise
Petitions Examiner
Office of Petitions

cc: ENERIZE CORPORATION
C/O ELENA SHEMBEL
4956 ROTHSCHILD DRIVE
CORAL SPRINGS, FL 33067-4134

UNITED STATES PATENT AND TRADEMARK OFFICE

Commissioner for Patents
United States Patent and Trademark Office
P.O. Box 1450
Alexandria, VA 22313-1450
www.uspto.gov

JOHN CHRISTOPER, ESQ.
CHRISTOPER 7 WEISBERG, PA
200 EAST LAS OLAS BOULEVARD - SUITE 2040
FORT LAUDERDALE, FL 33301

COPY MAILED
JAN 13 2009

In re Application of	:	
Volodymyr Red'ko, et al.	:	
Application No. 10/898,397	:	DECISION ON PETITION
Filed: July 23, 2004	:	TO WITHDRAW
Attorney Docket No. 8326-2	:	FROM RECORD
	:	

This is a decision on the Request to Withdraw as attorney or agent of record under 37 C.F.R. § 1.36(b), filed October 23, 2008.

The request is **NOT APPROVED**.

A grantable request to withdraw as attorney/agent of record must be signed by every attorney/agent seeking to withdraw or contain a clear indication that one attorney is signing on behalf of another/others.

The request cannot be approved because practitioners were not appointed by customer number. In order to withdraw by customer petitioner must have been appointed by customer number.

All future communications from the Office will continue to be directed to the above-listed address until otherwise notified by applicant.

Telephone inquiries concerning this decision should be directed to undersigned at 571-272-1642.

/AMW/
April M. Wise
Petitions Examiner
Office of Petitions

cc: ENERIZE CORPORATION
C/O ELENA SHEMBEL
4956 ROTHSCHILD DRIVE
CORAL SPRINGS, FL 33067-4134

UNITED STATES PATENT AND TRADEMARK OFFICE

Commissioner for Patents
United States Patent and Trademark Office
P.O. Box 1450
Alexandria, VA 22313-1450
www.uspto.gov

AKERMAN SENTERFITT
P.O. BOX 3188
WEST PALM BEACH, FL 33402-3188

COPY MAILED

DEC 04 2007

OFFICE OF PETITIONS

In re Application of
SHEMBEL, Elena et al.
Application No. 10/898,398
Filed: July 23, 2004
Attorney Docket No. **8326-9**

DECISION ON PETITION
TO WITHDRAW
FROM RECORD

This is a decision on the Request to Withdraw as attorney or agent of record under 37 C.F.R. § 1.36(b), filed November 15, 2007.

The request is **APPROVED**.

A grantable request to withdraw as attorney/agent of record must be signed by every attorney/agent seeking to withdraw or contain a clear indication that one attorney is signing on behalf of another/others. A request to withdraw will not be approved unless at least 30 (thirty) days would remain between the date of approval and the later of the expiration date of a time to file a response or the expiration date of the maximum time period which can be extended under 37 C.F.R. § 1.136(a).

The request was signed by Neil R. Jetter on behalf of all attorneys of record who are associated with customer No. 30448. All attorneys/agents associated have been withdrawn. Applicant is reminded that there is no attorney of record at this time.

All future correspondence will be directed to the first named inventor Elena Shembel at the address indicated below.

There is an outstanding Office action mailed November 15, 2007 that requires a reply from the applicant.

Telephone inquiries concerning this decision should be directed to the undersigned at 571-272-4231.

Michelle R. Eason
Paralegal Specialist
Office of Petitions

cc: **ENERIZE CORPORATION**
C/O ELENA SHEMBEL
4956 ROTHSCHILD DRIVE
CORAL SPRINGS, FLORIDA 33067-4134

UNITED STATES PATENT AND TRADEMARK OFFICE

Commissioner for Patents
United States Patent and Trademark Office
P.O. Box 1450
Alexandria, VA 22313-1450
www.uspto.go

Choate, Hall & Stewart LLP
Two International Place
Boston, MA 02110

COPY MAILED

SEP 26 2005

OFFICE OF PETITIONS

In re Application of :
Danishefsky et al. :
Application No. 10/898,410 :
Filed: July 23, 2004 :
Attorney Docket No. 2003080-0164 :
For: Glycopeptide Conjugates and :
Uses Thereof :

Decision According Status
Under 37 CFR 1.47(a)

This is a decision on the petition under 37 CFR 1.47(a), filed June 20, 2005.

The petition is **granted**.

The above-identified application and papers have been reviewed and found in compliance with 37 CFR 1.47(a). This application is hereby accorded Rule 1.47(a) status.

As provided in Rule 1.47(c), this Office will forward notice of this application's filing to the non-signing inventor at the address given in the petition. Notice of the filing of this application will also be published in the Official Gazette.

Telephone inquiries regarding this communication should be directed to Petitions Attorney Steven Brantley at (571) 272-3203.

Charles Steven Brantley
Senior Petitions Attorney
Office of Petitions

UNITED STATES PATENT AND TRADEMARK OFFICE

Commissioner for Patents
United States Patent and Trademark Office
P.O. Box 1450
Alexandria, VA 22313-1450
www.uspto.gov

PAUL, HASTINGS, JANOFSKY & WALKER LLP
P.O. BOX 919092
SAN DIEGO, CA 92191-9092

COPY MAILED

JUN 29 2006

OFFICE OF PETITIONS

In re Application of	:	
Arlene J. Harris	:	
Application No. 10/898,419	:	DECISION ON PETITION
Filed: July 23, 2004	:	TO WITHDRAW
Attorney Docket No. Dyna-6 (39907.00004.UTL1)	:	FROM RECORD
	:	

This is a decision on the Request to Withdraw as attorney or agent of record under 37 C.F.R. § 1.36(b), filed January 23, 2006.

The request is **NOT APPROVED** as moot.

A review of the file record indicates that the power of attorney to Amy E. Simpson, along with all of the other attorneys associated with Customer No. **36183** has been revoked by the assignee of the patent application on November 30, 2005. Accordingly, the request to withdraw under 37 C.F.R. § 1.36(b) is moot.

All future communications from the Office will be directed to the below-listed address until otherwise notified by applicant/assignee or the current attorneys of record.

This application is being referred to Technology Center AU 2617 to await a reply to the Non-final Office action mailed on February 17, 2006.

Telephone inquires concerning this decision should be directed to the undersigned at 571-272- 3208.

Karen Creasy

Karen Creasy
Petitions Examiner
Office of Petitions

Conferee: DS

cc:
STRAUB & POKOTYLO
620 TINTON AVENUE
BLDG. B, 2ND FLOOR
TINTON FALLS, NJ 07724

SPE: D. Schuberg

SPE RESPONSE FOR CERTIFICATE OF CORRECTION

Paper No.: _____

DATE : 4/27/07

TO SPE OF : ART UNIT 2834

SUBJECT : Request for Certificate of Correction for Appl. No.: 10/898,444 Patent No.: 7187106

Please respond to this request for a certificate of correction within 7 days.

Please review the requested changes/corrections as shown in the **COCIN** document(s) in the IFW application image. No new matter should be introduced, nor should the scope or meaning of the claims be changed.

Please complete the response (see below) and forward the completed response to scanning using document code **COCX**.

Lamonte M. Newsome
Certificates of Correction Branch
703-308-9390 ext. 112

Thank You For Your Assistance

The request for issuing the above-identified correction(s) is hereby:
Note your decision on the appropriate box.

- ☐ **Approved** — All changes apply.
- ☒ **Approved in Part** — Specify below which changes **do not** apply.
- ☐ **Denied** — State the reasons for denial below.

Comments: Changes directed to -- Colum 20, line 4 -- are not approved.
8/3/06 - Claims: presented claim 23 (patented claim 26) as dependent from claim 6 (patented claim 25). The error is not considered to be the Office's fault.

DARREN SCHUBERG
SUPERVISORY PATENT EXAMINER
TECHNOLOGY CENTER 2800

2834
Art Unit

PTO/SB/44 (07-03)
Approved for use through 01/31/2004. OMB 0651-0033
U.S. Patent and Trademark Office; U.S. DEPARTMENT OF COMMERCE
Under the Paperwork Reduction Act of 1995, no persons are required to respond to a collection of information unless it displays a valid OMB control number.
(Also Form PTO-1050)

UNITED STATES PATENT AND TRADEMARK OFFICE

CERTIFICATE OF CORRECTION

PATENT NUMBER : 7,187,106 B2

DATED : March 6, 2007

INVENTOR(S) : Naoto Fuse et al.

It is certified that an error appears or errors appear in the above-identified patent and that said Letters Patent is hereby corrected as shown below:

Column 17, line 38, delete "A position mechanism";

Column 18, line 14, delete "A position mechanism"; and

~~Column 20, line 4, change "claim 25" to --claim 1--.~~

MAILING ADDRESS OF SENDER: Morgan & Finnegan, LLP
3 World Financial Center
New York, NY 10281-2101

PATENT NO. 7,187,106 B2

No. of additional copies

⇒

This collection of information is required by 37 CFR 1.322, 1.323, and 1.324. The information is required to obtain or retain a benefit by the public which is to file (and by the USPTO to process) an application. Confidentiality is governed by 35 U.S.C. 122 and 37 CFR 1.14. This collection is estimated to take 1.0 hour to complete, including gathering, preparing, and submitting the completed application form to the USPTO. Time will vary depending upon the individual case. Any comments on the amount of time you require to complete this form and/or suggestions for reducing this burden, should be sent to the Chief Information Officer, U.S. Patent and Trademark Office, U.S. Department of Commerce, P.O. Box 1450, Alexandria, VA 22313-1450. DO NOT SEND FEES OR COMPLETED FORMS TO THIS ADDRESS. SEND TO: Attention Certificate of Corrections Branch, Commissioner for Patents, P.O. Box 1450, Alexandria, VA 22313-1450.

If you need assistance in completing the form, call 1-800-PTO-9199 and select option 2.

UNITED STATES PATENT AND TRADEMARK OFFICE

UNITED STATES DEPARTMENT OF COMMERCE
United States Patent and Trademark Office
Address: COMMISSIONER FOR PATENTS
P.O. Box 1450
Alexandria, Virginia 22313-1450
www.uspto.gov

PEARNE & GORDON LLP
1801 EAST 9TH STREET
SUITE 1200
CLEVELAND, OH 44114-3108

Mail Date: 04/21/2010

Applicant	: Mustapha Elyaakoubi	: DECISION ON REQUEST FOR
Patent Number	: 7595096	: RECALCULATION of PATENT
Issue Date	: 09/29/2009	: TERM ADJUSTMENT IN VIEW
Appliction No	: 10/898,458	: OF WYETH AND NOTICE OF INTENT TO
Filed	: 07/23/2004	: ISSUE CERTIFICATE OF CORRECTION
		:

The Request for Recalculation is **GRANTED** to the extent indicated.

The patent term adjustment has been determined to be **753** days. The USPTO will *sua sponte* issue a certificate of correction reflecting the amount of PTA days determined by the recalculation.

Prior to the issuance of the certificate of correction, the USPTO will afford patentee an opportunity to be heard and request reconsideration. Accordingly, patentee has **one month or thirty (30) days**, whichever is longer, to file a request for reconsideration of this patent term adjustment calculation. See 35 U.S.C. 154(b)(3)(B)(ii) and 37 CFR 1.322(a)(4). No extensions of time will be granted under 37 CFR 1.136.

Patentee should use document code PET.OP if electronically filing a request for reconsideration of this patent term adjustment calculation. The patentee must also include the information required by 37 CFR 1.705(b)(2) and the fee required by 37 CFR 1.18(e). If patentee does not file a timely request for reconsideration of this patent term adjustment calculation including the information required by 37 CFR 1.705(b)(2) and the fee required by 37 CFR 1.18(e), the USPTO will issue a certificate of correction reflecting the PTA determination noted above.

Patentee should be aware that in order to preserve the right to review in the United States District Court for the District of Columbia of the USPTO patent term adjustment determination, patentee must ensure that he or she also take the steps required under 35 U.S.C. 154(b)(4)(A) in a timely manner. Nothing in the request for recalculation should be construed as providing an alternative time frame for commencing a civil action under 35 U.S.C. 154(b)(4)(A).

Any questions concerning this decision should be directed to the Office of Patent Legal Administration at 571-272-7702.

UNITED STATES PATENT AND TRADEMARK OFFICE

UNITED STATES DEPARTMENT OF COMMERCE
United States Patent and Trademark Office
Address: COMMISSIONER FOR PATENTS
P.O. Box 1450
Alexandria, Virginia 22313-1450
www.uspto.gov

HOLLAND & HART, LLP
P.O BOX 8749
DENVER, CO 80201

Mail Date: 04/21/2010

Applicant	: Henning von Spreckelsen	: DECISION ON REQUEST FOR
Patent Number	: 7578040	: RECALCULATION of PATENT
Issue Date	: 08/25/2009	: TERM ADJUSTMENT IN VIEW
Appliction No	: 10/898,459	: OF WYETH AND NOTICE OF INTENT TO
Filed	: 07/23/2004	: ISSUE CERTIFICATE OF CORRECTION
		:

The Request for Recalculation is **GRANTED** to the extent indicated.

The patent term adjustment has been determined to be **219** days. The USPTO will *sua sponte* issue a certificate of correction reflecting the amount of PTA days determined by the recalculation.

Prior to the issuance of the certificate of correction, the USPTO will afford patentee an opportunity to be heard and request reconsideration. Accordingly, patentee has **one month or thirty (30) days**, whichever is longer, to file a request for reconsideration of this patent term adjustment calculation. See 35 U.S.C. 154(b)(3)(B)(ii) and 37 CFR 1.322(a)(4). No extensions of time will be granted under 37 CFR 1.136.

Patentee should use document code PET.OP if electronically filing a request for reconsideration of this patent term adjustment calculation. The patentee must also include the information required by 37 CFR 1.705(b)(2) and the fee required by 37 CFR 1.18(e). If patentee does not file a timely request for reconsideration of this patent term adjustment calculation including the information required by 37 CFR 1.705(b)(2) and the fee required by 37 CFR 1.18(e), the USPTO will issue a certificate of correction reflecting the PTA determination noted above.

Patentee should be aware that in order to preserve the right to review in the United States District Court for the District of Columbia of the USPTO patent term adjustment determination, patentee must ensure that he or she also take the steps required under 35 U.S.C. 154(b)(4)(A) in a timely manner. Nothing in the request for recalculation should be construed as providing an alternative time frame for commencing a civil action under 35 U.S.C. 154(b)(4)(A).

Any questions concerning this decision should be directed to the Office of Patent Legal Administration at 571-272-7702.

UNITED STATES PATENT AND TRADEMARK OFFICE

Commissioner for Patents
United States Patent and Trademark Office
P.O. Box 1450
Alexandria, VA 22313-1450
www.uspto.gov

DUANE MORRIS LLP
IP DEPARTMENT (TSMC)
30 SOUTH 17TH STREET
PHILADELPHIA PA 19103-4196

COPY MAILED

FEB 0 4 2008

OFFICE OF PETITIONS

In re Patent No. 7,242,559	:	
Issue Date: July 10, 2007	:	
Application No. 10/898,462	:	ON PETITION
Filed: July 22, 2004	:	
Attorney Docket No. TSMC2004-0078(N1280-600	:	

This is a decision on the petition filed September 21, 2007, which is being treated as a request under 37 CFR 3.81(b)[1] to correct the name of an assignee on the front page of the above-identified patent by way of a Certificate of Correction.

The request is **GRANTED**.

Telephone inquiries concerning this decision may be directed to Carl Friedman at (571) 272-6842. Inquiries regarding the issuance of a certificate of correction should be directed to the Certificate of Correction Branch at (571) 272-4200.

The Certificates of Correction Branch will be notified of this decision granting the petition under 37 CFR 3.81(b) and directing issuance of the requested Certificate of Correction.

The application will be forwarded to Technology Center Art Unit 2836 for consideration of the Request for Certificate of Correction in regards to changes to the specification by Certificates of Correction Branch.

Carl Friedman
Petitions Examiner
Office of Petitions

---

[1] *See* MPEP 1309, subsection II; and Official Gazette of June 22, 2004.

UNITED STATES PATENT AND TRADEMARK OFFICE

UNITED STATES DEPARTMENT OF COMMERCE
United States Patent and Trademark Office
Address: COMMISSIONER FOR PATENTS
P.O. Box 1450
Alexandria, Virginia 22313-1450
www.uspto.gov

PERKINS COIE LLP/MSFT
P. O. BOX 1247
SEATTLE, WA 98111-1247

Mail Date: 04/20/2010

Applicant	: Steven Townsend	: DECISION ON REQUEST FOR
Patent Number	: 7657923	: RECALCULATION of PATENT
Issue Date	: 02/02/2010	: TERM ADJUSTMENT IN VIEW
Appliction No	: 10/898,463	: OF WYETH AND NOTICE OF INTENT TO
Filed	: 07/23/2004	: ISSUE CERTIFICATE OF CORRECTION
		:

The Request for Recalculation is **GRANTED** to the extent indicated.

The patent term adjustment has been determined to be **1070** days. The USPTO will *sua sponte* issue a certificate of correction reflecting the amount of PTA days determined by the recalculation.

Prior to the issuance of the certificate of correction, the USPTO will afford patentee an opportunity to be heard and request reconsideration. Accordingly, patentee has **one month or thirty (30) days**, whichever is longer, to file a request for reconsideration of this patent term adjustment calculation. See 35 U.S.C. 154(b)(3)(B)(ii) and 37 CFR 1.322(a)(4). No extensions of time will be granted under 37 CFR 1.136.

Patentee should use document code PET.OP if electronically filing a request for reconsideration of this patent term adjustment calculation. The patentee must also include the information required by 37 CFR 1.705(b)(2) and the fee required by 37 CFR 1.18(e). If patentee does not file a timely request for reconsideration of this patent term adjustment calculation including the information required by 37 CFR 1.705(b)(2) and the fee required by 37 CFR 1.18(e), the USPTO will issue a certificate of correction reflecting the PTA determination noted above.

Patentee should be aware that in order to preserve the right to review in the United States District Court for the District of Columbia of the USPTO patent term adjustment determination, patentee must ensure that he or she also take the steps required under 35 U.S.C. 154(b)(4)(A) in a timely manner. Nothing in the request for recalculation should be construed as providing an alternative time frame for commencing a civil action under 35 U.S.C. 154(b)(4)(A).

Any questions concerning this decision should be directed to the Office of Patent Legal Administration at 571-272-7702.

UNITED STATES PATENT AND TRADEMARK OFFICE

Commissioner for Patents
United States Patent and Trademark Office
P. O. Box 1450
Alexandria, VA 22313-1450
www.uspto.gov

KLEINBERG & LERNER LLP
2049 CENTURY PARK EAAST, SUITE 1080
LOS ANGELES, CA 90067

COPY MAILED

JUN 29 2005

OFFICE OF PETITIONS

In re Application of	:DECISION GRANTING PETITION
Moshe Klein et al	:UNDER 37 CFR 1.137(b) AND
Application No. 10/898,464	:NOTICE RESETTING PERIOD FOR
Filed: July 23, 2004	:REPLY TO NONFINAL OFFICE
Attorney Docket No. 458012.14964	:ACTION

This is a decision on the petition, filed March 11, 2005, which is being treated as a petition under 37 CFR 1.137(b) to revive the instant nonprovisional application for failure to timely notify the U.S. Patent and Trademark Office (USPTO) of the filing of an application in a foreign country or under a multinational treaty that requires publication of applications eighteen months after filing. *See* 37 CFR 1.137(f).

The petition is **GRANTED**.

Petitioner states that the instant nonprovisional application is the subject of an application filed in an eighteen month publication country on September 3, 2004. However, the USPTO was unintentionally not notified of this filing within 45 days subsequent to the filing of the subject application in an eighteen month publication country.

In view of the above, this application became abandoned pursuant to 35 U.S.C. § 122(b)(2)(B)(iii) and 37 CFR 1.213(c) for failure to timely notify the USPTO of the filing of a counterpart application in a foreign country or under a multinational treaty that requires publication of applications eighteen months after filing.

A petition to revive an application abandoned pursuant to 35 U.S.C. 122(b)(2)(B)(iii) for failure to notify the Office of a foreign filing must be accompanied by:

(1) the required reply which is met by the notification of such filing in a foreign country or under a multinational treaty;
(2) the petition fee as set forth in 37 CFR 1.17(m);

and
(3) a statement that the entire delay in filing the required reply from the due date of the reply until the filing of a grantable petition was unintentional.

The instant petition has been found to be in compliance with 37 CFR 1.137(b). Accordingly, the failure to timely notify the USPTO of a foreign or international filing within 45 days after the date of filing of such foreign or international application as provided by 35 U.S.C. § 122(b)(2)(B)(iii) and 37 CFR 1.213(c) is accepted as having been unintentionally delayed.

The previous Request and Certification under 35 U.S.C. § 122(b)(2)(B)(i) has been rescinded. A Communication Regarding Rescission of Nonpublication Request and/or Notice of Foreign Filing which sets forth the projected publication date of October 6, 2005 has been mailed under separate cover.

There is no indication that a reply to the non-final Office action of January 25, 2005, has been filed. Accordingly, a shortened statutory period of three (3) months for reply to the non-final Office action of January 25, 2005 is restarted with the mailing date of this decision. Extensions of time pursuant to the provisions of 37 CFR 1.136(a) are permitted. Failure to timely reply within the period restarted by this decision will result in the abandonment of this application.

Petitioner has submitted $400 for the petition fee; whereas, the correct fee at the time of filing the petition was $1,500. Accordingly, as authorized, the $1,100 balance due will be charged to petitioner's deposit account.

Any inquiries concerning this decision may be directed to the undersigned at (571) 272-3218.

This matter is being referred to Technology Center Art Unit 3629 to await a reply to the January 25, 2005, non-final Office action, **the period of which is restarted to run from the mailing date of this decision on petition, as noted above.**

Frances Hicks

Frances Hicks
Petitions Examiner
Office of Petitions

UNITED STATES PATENT AND TRADEMARK OFFICE

Commissioner for Patents
United States Patent and Trademark Office
P.O. Box 1450
Alexandria, VA 22313-1450
www.uspto.gov

MARVIN H. KLEINBERG
KLEINBERG & LERNER, LLP
2049 CENTURY PARK EAST
SUITE 1080
LOS ANGELES, CA 90067

COPY MAILED

FEB 2 0 2007

OFFICE OF PETITIONS

In re Application of :
Moshe Klein et al :
Application No. 10/898,464 : ON PETITION
Filed: July 23, 2004 :
Attorney Docket No. :
458012.14964

This is a decision on the petition under the unintentional provisions of 37 CFR 1.137(b), filed June 29, 2006, to revive the above-identified application.

The petition is **DISMISSED**.

Any request for reconsideration of this decision must be submitted within TWO (2) MONTHS from the mail date of this decision. Extensions of time under 37 CFR 1.136(a) are permitted. The reconsideration request should include a cover letter entitled "Renewed Petition under 37 CFR 1.137(b)." This is **not** a final agency action within the meaning of 5 U.S.C. § 704.

The above-identified application became abandoned for failure to reply within the meaning of 37 CFR 1.113 in a timely manner to the final Office action mailed October 7, 2005, which set a shortened statutory period for reply of three (3) months. No extensions of time were obtained under the provisions of 37 CFR 1.136(a). Accordingly, the above-identified application became abandoned on January 10, 2006 (January 7, 2006, the due date, is a Saturday). A Notice of Abandonment was mailed on May 12, 2006.

A grantable petition under 37 CFR 1.137(b) must be accompanied by: (1) the required reply, unless previously filed; (2) the petition fee as set forth in 37 CFR 1.17(m); (3) a statement that

the entire delay in filing the required reply from the due date for the reply until the filing of a grantable petition pursuant to 37 CFR 1.137(b) was unintentional; and (4) any terminal disclaimer (and fee as set forth in 37 CFR 1.20(d)) required by 37 CFR 1.137(d). Where there is a question as to whether either the abandonment or the delay in filing a petition under 37 CFR 1.137 was unintentional, the Director may require additional information. *See* MPEP 711.03(c)(II)(C).

The instant petition lacks item (1) above. As noted above, this application became abandoned for failure to timely file a reply within the meaning of 37 CFR 1.113 to the final Office action of October 7, 2005. The proposed reply required for consideration of a petition to revive must be a Notice of Appeal (and appeal fee required by 37 CFR 41.20(b)(2)), an amendment that *prima facie* places the application in condition for allowance, a Request for Continued Examination (RCE) and submission (37 CFR 1.114), or the filing of a continuing application under 37 CFR 1.53(b). *See* MPEP 711.03(c)(II)(A)(2). Since the amendment submitted does not *prima facie* place the application in condition for allowance (see the attached courtesy copy of Advisory Action), the reply required must be a Notice of Appeal (and appeal fee), RCE, or the filing of a continuing application under 37 CFR 1.53(b).

Further correspondence with respect to this matter should be addressed as follows:

By Mail: Mail Stop PETITION
Commissioner for Patents
P. O. Box 1450
Alexandria, VA 22313-1450

By hand: U. S. Patent and Trademark Office
Customer Service Window, Mail Stop Petitions
Randolph Building
401 Dulany Street
Alexandria, VA 22314

The centralized facsimile number is **(571) 273-8300.**

Telephone inquiries concerning this decision should be directed to the undersigned at (571) 272-3218.

Frances Hicks
Petitions Examiner
Office of Petitions

ATTACHMENT: Courtesy copy of Advisory Action

Advisory Action Before the Filing of an Appeal Brief	Application No. 10/898,464	Applicant(s) KLEIN ET AL.	
	Examiner John G. Weiss	Art Unit 3629	

--The MAILING DATE of this communication appears on the cover sheet with the correspondence address --

THE REPLY FILED 29 June 2006 FAILS TO PLACE THIS APPLICATION IN CONDITION FOR ALLOWANCE.

1. ☒ The reply was filed after a final rejection, but prior to or on the same day as filing a Notice of Appeal. To avoid abandonment of this application, applicant must timely file one of the following replies: (1) an amendment, affidavit, or other evidence, which places the application in condition for allowance; (2) a Notice of Appeal (with appeal fee) in compliance with 37 CFR 41.31; or (3) a Request for Continued Examination (RCE) in compliance with 37 CFR 1.114. The reply must be filed within one of the following time periods:
   a) ☐ The period for reply expires _____months from the mailing date of the final rejection.
   b) ☐ The period for reply expires on: (1) the mailing date of this Advisory Action, or (2) the date set forth in the final rejection, whichever is later. In no event, however, will the statutory period for reply expire later than SIX MONTHS from the mailing date of the final rejection.
   Examiner Note: If box 1 is checked, check either box (a) or (b). ONLY CHECK BOX (b) WHEN THE FIRST REPLY WAS FILED WITHIN TWO MONTHS OF THE FINAL REJECTION. See MPEP 706.07(f).

Extensions of time may be obtained under 37 CFR 1.136(a). The date on which the petition under 37 CFR 1.136(a) and the appropriate extension fee have been filed is the date for purposes of determining the period of extension and the corresponding amount of the fee. The appropriate extension fee under 37 CFR 1.17(a) is calculated from: (1) the expiration date of the shortened statutory period for reply originally set in the final Office action; or (2) as set forth in (b) above, if checked. Any reply received by the Office later than three months after the mailing date of the final rejection, even if timely filed, may reduce any earned patent term adjustment. See 37 CFR 1.704(b).

NOTICE OF APPEAL

2. ☐ The Notice of Appeal was filed on _____. A brief in compliance with 37 CFR 41.37 must be filed within two months of the date of filing the Notice of Appeal (37 CFR 41.37(a)), or any extension thereof (37 CFR 41.37(e)), to avoid dismissal of the appeal. Since a Notice of Appeal has been filed, any reply must be filed within the time period set forth in 37 CFR 41.37(a).

AMENDMENTS

3. ☐ The proposed amendment(s) filed after a final rejection, but prior to the date of filing a brief, will not be entered because
   (a) ☐ They raise new issues that would require further consideration and/or search (see NOTE below);
   (b) ☐ They raise the issue of new matter (see NOTE below);
   (c) ☐ They are not deemed to place the application in better form for appeal by materially reducing or simplifying the issues for appeal; and/or
   (d) ☐ They present additional claims without canceling a corresponding number of finally rejected claims.
   NOTE: _____. (See 37 CFR 1.116 and 41.33(a)).
4. ☐ The amendments are not in compliance with 37 CFR 1.121. See attached Notice of Non-Compliant Amendment (PTOL-324).
5. ☐ Applicant's reply has overcome the following rejection(s): _____.
6. ☐ Newly proposed or amended claim(s) _____ would be allowable if submitted in a separate, timely filed amendment canceling the non-allowable claim(s).
7. ☐ For purposes of appeal, the proposed amendment(s): a) ☐ will not be entered, or b) ☐ will be entered and an explanation of how the new or amended claims would be rejected is provided below or appended.
   The status of the claim(s) is (or will be) as follows:
   Claim(s) allowed: _____.
   Claim(s) objected to: _____.
   Claim(s) rejected: _____.
   Claim(s) withdrawn from consideration: _____.

AFFIDAVIT OR OTHER EVIDENCE

8. ☐ The affidavit or other evidence filed after a final action, but before or on the date of filing a Notice of Appeal will not be entered because applicant failed to provide a showing of good and sufficient reasons why the affidavit or other evidence is necessary and was not earlier presented. See 37 CFR 1.116(e).
9. ☐ The affidavit or other evidence filed after the date of filing a Notice of Appeal, but prior to the date of filing a brief, will not be entered because the affidavit or other evidence failed to overcome all rejections under appeal and/or appellant fails to provide a showing a good and sufficient reasons why it is necessary and was not earlier presented. See 37 CFR 41.33(d)(1).
10. ☐ The affidavit or other evidence is entered. An explanation of the status of the claims after entry is below or attached.

REQUEST FOR RECONSIDERATION/OTHER

11. ☒ The request for reconsideration has been considered but does NOT place the application in condition for allowance because: See Continuation Sheet.
12. ☐ Note the attached Information Disclosure Statement(s). (PTO/SB/08) Paper No(s). _____
13. ☐ Other: _____.

JOHN G. WEISS
SUPERVISORY PATENT EXAMINER
TECHNOLOGY CENTER 3600

Continuation of 11. does NOT place the application in condition for allowance because: The system of Willner et al does monitor an activity with an identifying data elemnet and correlate with status of item.

UNITED STATES PATENT AND TRADEMARK OFFICE

Commissioner for Patents
United States Patent and Trademark Office
P.O. Box 1450
Alexandria, VA 22313-1450
www.uspto.gov

CHALKER FLORES, LLP
2711 LBJ FRWY
SUITE 1036
DALLAS, TX 75234

COPY MAILED

JUN 3 0 2008

OFFICE OF PETITIONS

In re Application of	:	
David G. GORENSTEIN, et al	:	
Application No. 10/898,470	:	DECISION ON PETITION
Filed: July 23, 2004	:	
Attorney Docket No. UTMB.1015	:	

This is a decision on the petition under the unintentional provisions of 37 CFR 1.137(b), filed April 15, 2008, to revive the above-identified application.

The petition is **GRANTED**.

The application became abandoned for failure to reply in a timely manner to the Restriction Requirement, mailed December 20, 2006, which set a shortened statutory period for reply of one (1) month or thirty (30) days (whichever is later). No extensions of time under the provisions of 37 CFR 1.136(a) were obtained. Accordingly, the application became abandoned on January 21, 2007.

The petition satisfies the requirements of 37 CFR 1.137(b) in that petitioner has supplied (1) the reply in the form of an election, (2) the petition fee of $770; and (3) an adequate statement of unintentional delay.

37 CFR 1.137(c) requires a terminal disclaimer dedicating to the public a terminal part of the term of any patent granted on the above-identified application or any patent granted on any continuing application that contains a specific reference under 35 U.S.C. 120, 121, or 365(c) to the above-identified application. Since the application is not a utility or plant application filed on or before June 8, 1995, a terminal disclaimer is not required. Accordingly, the terminal disclaimer filed with the instant petition is unnecessary. Therefore, the fee of $65 will be refunded to petitioner in due course.

Telephone inquiries concerning this decision should be directed to Diane Goodwyn at (571) 272-6735.

This application is being referred to Technology Center AU 1635 for appropriate action by the Examiner in the normal course of business on the reply received April 15, 2008.

April Wise
Petitions Examiner
Office of Petitions

UNITED STATES PATENT AND TRADEMARK OFFICE

Commissioner for Patents
United States Patent and Trademark Office
P.O. Box 1450
Alexandria, VA 22313-1450
www.uspto.gov

NEUSTEL LAW OFFICES, LTD.
2534 SOUTH UNIVERSITY DRIVE, SUITE 4
FARGO ND 58103

COPY MAILED

SEP 2 5 2006

OFFICE OF PETITIONS

In re Application of

GOLDSTEIN
Application No. 10/898,480
Filed: July 22, 2004
Attorney Docket No. BKFK-003

DECISION ON PETITION
TO WITHDRAW
FROM RECORD

This is a decision on the Request to Withdraw as attorney or agent of record under 37 C.F.R. § 1.36(b), filed May 9, 2006.

The request is **APPROVED**.

A grantable request to withdraw as attorney/agent of record must be signed by every attorney/agent seeking to withdraw or contain a clear indication that one attorney is signing on behalf of another/others. A request to withdraw will not be approved unless at least 30 (thirty) days would remain between the date of approval and the later of the expiration date of a time to file a response or the expiration date of the maximum time period which can be extended under 37 C.F.R. § 1.136(a).

The request was signed by Michael S. Neustel, the sole attorney of record. Applicant is reminded that there is no attorney of record at this time. All future correspondence will be directed to the first named inventor Cassidy L. Goldstein at the address indicated below.

Telephone inquiries concerning this decision should be directed to Monica A. Graves at 571-272-7253.

for Denise Pothier
Petitions Examiner
Office of Petitions

cc: **Cassidy L. Goldstein**
1177 High Ridge
Stamford, CT 06905

UNITED STATES PATENT AND TRADEMARK OFFICE

UNITED STATES DEPARTMENT OF COMMERCE
United States Patent and Trademark Office
Address: COMMISSIONER FOR PATENTS
P.O. Box 1450
Alexandria, Virginia 22313-1450
www.uspto.gov

FISH & RICHARDSON P.C.
P.O. Box 1022
MINNEAPOLIS, MN 55440-1022

Mail Date: 04/20/2010

Applicant	: Jonathan Brandt	: DECISION ON REQUEST FOR
Patent Number	: 7643702	: RECALCULATION of PATENT
Issue Date	: 01/05/2010	: TERM ADJUSTMENT IN VIEW
Appliction No	: 10/898,489	: OF WYETH AND NOTICE OF INTENT TO
Filed	: 07/23/2004	: ISSUE CERTIFICATE OF CORRECTION
		:

The Request for Recalculation is **GRANTED** to the extent indicated.

The patent term adjustment has been determined to be **1477** days. The USPTO will *sua sponte* issue a certificate of correction reflecting the amount of PTA days determined by the recalculation.

Prior to the issuance of the certificate of correction, the USPTO will afford patentee an opportunity to be heard and request reconsideration. Accordingly, patentee has **one month or thirty (30) days**, whichever is longer, to file a request for reconsideration of this patent term adjustment calculation. See 35 U.S.C. 154(b)(3)(B)(ii) and 37 CFR 1.322(a)(4). No extensions of time will be granted under 37 CFR 1.136.

Patentee should use document code PET.OP if electronically filing a request for reconsideration of this patent term adjustment calculation. The patentee must also include the information required by 37 CFR 1.705(b)(2) and the fee required by 37 CFR 1.18(e). If patentee does not file a timely request for reconsideration of this patent term adjustment calculation including the information required by 37 CFR 1.705(b)(2) and the fee required by 37 CFR 1.18(e), the USPTO will issue a certificate of correction reflecting the PTA determination noted above.

Patentee should be aware that in order to preserve the right to review in the United States District Court for the District of Columbia of the USPTO patent term adjustment determination, patentee must ensure that he or she also take the steps required under 35 U.S.C. 154(b)(4)(A) in a timely manner. Nothing in the request for recalculation should be construed as providing an alternative time frame for commencing a civil action under 35 U.S.C. 154(b)(4)(A).

Any questions concerning this decision should be directed to the Office of Patent Legal Administration at 571-272-7702.

UNITED STATES PATENT AND TRADEMARK OFFICE

Commissioner for Patents
United States Patent and Trademark Office
P.O. Box 1450
Alexandria, VA 22313-1450
www.uspto.gov

HOLLAND & HART LLP
60 E. SOUTH TEMPLE, SUITE 2000
P.O. BOX 11583
SALT LAKE CITY, UT 84110

MAILED

NOV 23 2009

OFFICE OF PETITIONS

In re Application of	:	
Jorgen J. MOLLER, JR.	:	
Application No. 10/898,494	:	DECISION GRANTING PETITION
Filed: July 23, 2004	:	UNDER 37 CFR 1.313(c)(2)
Attorney Docket No. **46308.0041**	:	

This is a decision on the petition under 37 CFR 1.313(c)(2), filed November 21, 2009, to withdraw the above-identified application from issue after payment of the issue fee.

The petition is **GRANTED**.

The above-identified application is withdrawn from issue for consideration of a submission under 37 CFR 1.114 (request for continued examination). *See* 37 CFR 1.313(c)(2).

Petitioner is advised that the issue fee paid on October 23, 2009 cannot be refunded. If, however, this application is again allowed, petitioner may request that it be applied towards the issue fee required by the new Notice of Allowance.[1]

Telephone inquiries should be directed to the undersigned at (571) 272-7253.

This application is being referred to Technology Center AU 3622 for processing of the request for continued examination under 37 CFR 1.114 and for consideration of the concurrently filed information disclosure statement.

/Monica A. Graves/
Petitions Examiner, Office of Petitions

---

[1] *The request to apply the issue fee to the new Notice may be satisfied by completing and returning the new Part B – Fee(s) Transmittal Form (along with any balance due at the time of submission). Petitioner is advised that the Issue Fee Transmittal Form* ***must*** *be completed and timely submitted to avoid abandonment of the application.*

UNITED STATES PATENT AND TRADEMARK OFFICE

COMMISSIONER FOR PATENTS
UNITED STATES PATENT AND TRADEMARK OFFICE
WASHINGTON, D.C. 20231
www.uspto.gov

MAILED

JUL 09 2007

Technology Center 2100

LAW OFFICE OF CARMEN PILI EKSTROM
727 Sunshine Drive
Los Altos, CA 94024

In re Application of: Ferman Marquez ARZATE et al. Application No. 10/898,509 Attorney Docket No. MX/JFC04-03 Filed: July 22, 2004 For: REINFORCED OVERHEAD MULTIPURPOSE CABLE FOR OUTSIDE TELECOMMUNICATIONS	)))))	**DECISION ON PETITION TO WITHDRAW RESTRICTION REQUIREMENT UNDER 37 CFR §1.144**

This is a decision on the petition filed July 26, 2006 under 37 C.F.R. §1.144 and 37 C.F.R. §1.181 to withdraw an outstanding restriction requirement.

The petition is **DENIED** with respect to the Process of Making (claims 10-19, renumbered) and Product Made (claims 1-9, renumbered) restriction requirement and **GRANTED** with respect to the species (Figures 1&2, Figure 2 and Figure 4) restriction requirement.

RELEVANT PROSECUTION HISTORY

July 22, 2004	The application identified above was filed with claims 1-19 (renumbered).
June 6, 2005	A restriction requirement was mailed restricting claims 1-9 (renumbered) and claims 10-19 (renumbered).
June 23, 2005	A response was filed traversing the restriction requirement.
August 24, 2005	The restriction requirement was made final in a non-final office action.
May 1, 2006	A Final rejection was mailed .
July 26, 2006	A Petition to withdraw the finality of the restriction requirement was filed.

REGULATIONS AND PRACTICE

37 C.F.R. § 1.143 states:

> If the applicant disagrees with the requirement for restriction, he may request reconsideration and withdrawal or modification of the requirement, giving the reasons therefor. (See § 1.111). In requesting reconsideration the applicant must indicate a provisional election of one invention for prosecution, which invention shall be the one elected in the event the requirement becomes final. The requirement for restriction will be reconsidered on such a request. If the requirement is repeated and made final, the examiner will at the same time act on the claims to the invention elected.

37 C.F.R. § 1.144 states:

> After a final requirement for restriction, the applicant, in addition to making any reply due on the remainder of the action, may petition the Commissioner to review the requirement ... A petition will not be considered if reconsideration of the requirement was not requested (see § 1.181).

37 C.F.R. § 1.181 states:

> (a) Petition may be taken to the Commissioner:
> (1) From any action or requirement of any examiner in the ex parte prosecution of an application, or in ex parte or inter partes prosecution of a reexamination proceeding which is not subject to appeal to the Board of Patent Appeals and Interferences or to the court;
> (2) In cases in which a statute or the rules specify that the matter is to be determined directly by or reviewed by the Commissioner; and
> (3) To invoke the supervisory authority of the Commissioner in appropriate circumstances. For petitions in interferences, see § 1.644.
> (b) Any such petition must contain a statement of the facts involved and the point or points to be reviewed and the action requested. Briefs or memoranda, if any, in support thereof should accompany or be embodied in the petition; and where facts are to be proven, the proof in the form of affidavits or declarations (and exhibits, if any) must accompany the petition.
> (c) When a petition is taken from an action or requirement of an examiner in the ex parte prosecution of an application, or in the ex parte or inter partes prosecution of a reexamination proceeding, it may be required that there have been a proper request for reconsideration (§ 1.111) and a repeated action by the examiner. The examiner may be directed by the Commissioner to furnish a written statement, within a specified time, setting forth the reasons for his or her decision upon the

matters averred in the petition, supplying a copy to the petitioner.

MPEP § 803 states:

> Under the statute an application may properly be required to be restricted to one of two or more claimed inventions only if they are able to support separate patents and they are either independent (MPEP § 806.04 - § 806.04(i)) or distinct (MPEP § 806.05 - § 806.05(i)).
> If the search and examination of an entire application can be made without serious burden, the examiner must examine it on the merits, even though it includes claims to independent or distinct inventions.
>
> CRITERIA FOR RESTRICTION BETWEEN PATENTABLY DISTINCT INVENTIONS
> There are two criteria for a proper requirement for restriction between patentably distinct inventions:
> (A) The inventions must be independent (see MPEP § 802.01, § 806.04, § 808.01) or distinct as claimed (see MPEP § 806.05 - § 806.05(i)); and
> (B) There must be a serious burden on the examiner if restriction is required (see MPEP § 803.02, § 806.04(a) - § 806.04(i), § 808.01(a), and § 808.02).... For purposes of the initial requirement, a serious burden on the examiner may be *prima facie* shown if the examiner shows by appropriate explanation of separate classification, or separate status in the art, or a different field of search as defined in MPEP § 808.02....

MPEP § 821.01 states:

> Where the initial requirement is traversed, it should be reconsidered. If, upon reconsideration, the examiner is still of the opinion that restriction is proper, it should be repeated and made final in the next Office action. (See MPEP § 803.01.) In doing so, the examiner should reply to the reasons or arguments advanced by applicant in the traverse. Form paragraph 8.25 should be used to make a restriction requirement final.

MPEP § 806.05(f) Process of Making and Product Made states:

> A process of making and a product made by the process can be shown to be distinct inventions if either or both of the following can be shown: (A) that the process *as claimed* is not an obvious process of making the product and the process as *claimed* can be used to make another materially different product; or (B) that the product *as claimed* can be made by another materially different process.
> Allegations of different processes or products need not be documented.
> A product defined by the process by which it can be made is still a product claim (*In re Bridgeford*, 357 F.2d 679, 149 USPQ 55 (CCPA 1966)) and can be restricted from the process if

the examiner can demonstrate that the product as claimed can be made by another materially different process; defining the product in terms of a process by which it is made is nothing more than a permissible technique that applicant may use to define the invention.
If applicant convincingly traverses the requirement, the burden shifts to the examiner to document a viable alternative process or product, or withdraw the requirement.
Form paragraphs 8.18 and 8.21.04 should be used in restriction requirements between product and process of making. [Rev. 5, Aug. 2006]

DECISION

37 C.F.R. § 1.181(c) requires that an action by an examiner, to be properly petitionable, must be followed by a request for reconsideration, and a repeated action by the examiner. 37 C.F.R. § 1.144 states that the applicant may petition the Commissioner after a final requirement for the restriction has been made.

In the above-identified application, petitioner filed a request for reconsideration prior to the petition of July 26, 2006, in accordance with 37 C.F.R. § 1.143. The restriction was made final in accordance with MPEP § 821.01.

Process of Making and Product Made

The original restriction requirement states: "Restriction to one of the following inventions is required under 35 U.S.C. 121:

I. Claims 1-8 **(now renumbered 1-9)**, drawn to a reinforced overhead cable, classified in class 174, subclass 40R.
II.Claims 9-18 **(now renumbered 10-19)**, drawn to manufacturing method, classified in class 29, subclass 825.

The inventions are distinct, each from the other because of the following reasons:
Inventions II and I are related as process of making and product made. The inventions are distinct if either or both of the following can be shown: (1) that the process as claimed can be used to make other and materially different product or (2) that the product as claimed can be made by another and materially different process (MPEP § 806.05(f)).
In the instant case the cable can be made with molded insulation.
Because these inventions are distinct for the reasons given above and have acquired a separate status in the art as shown by their different classification, restriction for examination purposes as indicated is proper." **(bold text added)**

The examiner properly set forth the restriction requirement as set forth in MPEP § 806.05(f). The cable is the product made and the manufacturing method is the process of making the cable. Petitioner argues that the two grouped inventions are related as combination (the method) and subcombination (the cable). Claim 10 however, is an independent claim drawn to the method alone, drafted in a short-hand format to avoid rewriting the particulars of the cable recited in claim 1 (see Ex parte Porter 25 USPQ2d 1144 & MPEP § 608.01(n)(II)). If claim 10 were a dependent combination claim including the limitations of claim 1 then claim 10 would be an improper hybrid claim that must be rejected under 35 USC 101 and 35 USC 112 second paragraph as set forth in Ex parte Lyell (17 USPQ2d 1548, Bd. Pat. App. & Int. 1990). The examiner properly treated claim 10 (renumbered claim 9) as an independent claim and properly restricted the claims as set forth in the original restriction requirement, page 2, paragraphs 1-3 mailed on June 6, 2005.

Species

With regard to the species restriction requirement mailed on June 6, 2005, page 2, paragraph 4, petitioner's arguments concerning figures 1-4 being directed to the same cable are persuasive. The figures are different views of the same cable (note pages 3 and 4 of the specification).
"Figure 1 is a cross sectional front view showing the different sections constituting the overhead reinforced multipurpose cable for outside telecommunications.
Figure 2 is a cross sectional view of the cable of Figure 1.
Figure 3 is an exploded isometric view of Figure 1 showing the multipair groups in their different arrangements and a self supporting reinforcement element.
Figure 4 is a front view of the multipair construction of the reinforced core of Figure 1."

Thus the species restriction requirement is improper.

CONCLUSION

The restriction requirement based on Process of Making and Product Made is **PROPER** and **MAINTAINED**

The restriction requirement based on species is **IMPROPER** and **WITHDRAWN**.

For the above reasons, the petition is **DENIED** with respect to Process of Making and Product Made and **GRANTED** with respect to the species.

The application will be forwarded to the examiner, however no action is required because the properly restricted claims to Group II were withdrawn from the application.

Wendy Garber
Director, Technology Center 2100
Computer Architecture, Software, and
Information Security
(571) 272-1400

UNITED STATES PATENT AND TRADEMARK OFFICE

Commissioner for Patents
United States Patent and Trademark Office
P.O. Box 1450
Alexandria, VA 22313-1450
www.uspto.gov

MAILED

JUL 09 2007

Technology Center 2100

LAW OFFICE OF CARMEN PILI EKSTROM
727 Sunshine Drive
Los Altos, CA 94024

In re Application of: Ferman Marquez ARZATE et al. Application No. 10/898,509 Attorney Docket No. MX/JFC04-03 Filed: July 22, 2004 For: REINFORCED OVERHEAD MULTIPURPOSE CABLE FOR OUTSIDE TELECOMMUNICATIONS	))))))	DECISION ON PETITION FOR SUPERVISORY REVIEW UNDER *37 CFR §1.181*

This is a decision on the petition under 37 CFR § 1.181, filed September 6, 2006 requesting the Commissioner to invoke his supervisory authority and withdraw the finality of the Final Office action mailed May 1, 2006.

The petition is **DENIED**.

RELIEF REQUESTED

The instant petition filed under 37 CFR 1.181 requests the following relief: withdrawal of the finality of the May 1, 2006 final office action as prosecution was alleged to have been prematurely closed.

REQUIREMENTS

A petition under 37 CFR §1.181 must include: (1) a statement of facts involved and (2) the point or points to be reviewed and the action requested. Note, the mere filing of a petition will not stay any period for reply that may be running against the application, nor act as a stay of other proceedings. In addition § 1.181(f) sets forth: any petition under this part not filed within two months of the mailing date of the action or notice from which relief is requested may be dismissed as untimely.

The petition initially filed on September 6, 2006 includes elements (1) and (2) above. The petition was filed within two months of the final Office action from which the relief is requested.

ANALYSIS

The amendment of claim 9 to overcome the 35 USC §112 (2nd paragraph) rejection has been carefully considered. No new issues were raised by said amendment.

Claim 9 however was rejected under 35 USC 103(a) in the non-final rejection mailed August 24, 2005 with Official Notice taken in paragraph 13 on page 9. The examiner stated that,

"Furthermore, the examiner takes official notice that carbon steel is a well-known type of steel used in the electrical arts. It would have been obvious to one having ordinary skill in the art at the time the invention was made to use the carbon steel as the self-supporting reinforcement element, since it has been held to be within the general skill of a worker in the art to select a known material on the basis of its suitability for the intended use as a matter of obvious design choice. In re Leshin, 125 USPQ 416.".

The MPEP section governing the use of Official Notice is set forth in MPEP §2144.03. The non-final rejection set forth a line of reasoning justifying the official notice taken.
Petitioner adequately traversed the examiner's assertion of official notice in the Response to the non-final action filed on December 30, 2005. The Final Rejection mailed May 1, 2006 cited and newly applied the Bartholomew (3581523) reference as evidence to support the assertion of Official Notice [see MPEP §2144.03 (C)]. In the Final Rejection on page 14, the examiner stated that

" In response to applicant's comments regarding official notice, examiner is presenting Bartholomew to show that Carbon Steele was well known material for use in the electrical arts."

The Bartholomew (3581523) reference was used in the Final Rejection to support the official notice taken in the non-final office action. The Bartholomew (3581523) reference was used to provide concrete evidence that carbon steel is a well-known type of steel used in the electrical arts. This reference was added only as directly corresponding evidence to support the prior application of official notice. No new issues were raised that would constitute a new ground of rejection and as such the Final Rejection is proper. [MPEP §2144.03 (D)]

CONCLUSION

For the above stated reasons, the petition for supervisory review of the finality of the Office action mailed May 1, 2006 requesting the Commissioner to invoke his supervisory authority and withdraw the finality of the Final Office action mailed May 1, 2006, is **DENIED**.

The application is being forwarded to the Examiner for further prosecution.

Wendy Garber
Director, Technology Center 2100
Computer Architecture, Software, and
Information Security
(571) 272-1400

UNITED STATES PATENT AND TRADEMARK OFFICE

Commissioner for Patents
United States Patent and Trademark Office
P.O. Box 1450
Alexandria, VA 22313-1450
www.uspto.gov

LAW OFFICES OF CARMEN PILI EKSTROM
727 SUNSHINE DRIVE
LOS ALTOS, CA 94024

MAILED

FEB 23 2010

OFFICE OF PETITIONS

In re Application of	:	
Fermin Marquez Arzate, et al.	:	
Application No. 10/898,509	:	DECISION ON PETITION
Filed: July 22, 2007	:	
Attorney Docket No. MX/JFC04-03	:	

This is a decision on the petition, filed November 30, 2009 and supplemented on January 4, 2010, which is being treated as a petition under 37 CFR 1.181 (no fee) requesting withdrawal of the holding of abandonment in the above-identified application.

The petition is **GRANTED**.

This application was held abandoned for failure to reply to the Notice of Non-Compliant Appeal Brief (Notice) mailed April 8, 2009, which set a one (1) month or thirty (30) day shortened statutory period for reply. A Notice of Abandonment has not been mailed.

Petitioner asserts that the Office action dated April 8, 2009 was not received.

A review of the written record indicates no irregularity in the mailing of the Notice, and, in the absence of any irregularity, there is a strong presumption that the Office action was properly mailed to the practitioner at the address of record. This presumption may be overcome by a showing that the Office action was not in fact received. In this regard, the showing required to establish the failure to receive the Office action must consist of the following:

1. a statement from practitioner stating that the Office action was not received by the practitioner;

2. a statement from the practitioner attesting to the fact that a search of the file jacket and docket records indicates that the Office action was not received; and

3. a copy of the docket record where the non-received Office action would have been entered had it been received and docketed must be attached to and referenced in the practitioner's statement.

See MPEP § 711.03(c) under subheading "Petition to Withdraw Holding of Abandonment Based on Failure to Receive Office Action," and "Withdrawing the Holding of Abandonment When Office Actions Are Not Received," 1156 Official Gazette 53 (November 16, 1993).

The petition satisfies the above-stated requirements. Accordingly, the application was not abandoned in fact.

In view of the above, the Notice of Abandonment is hereby **vacated** and the holding of abandonment **withdrawn**.

This is also decision on the petition under the unavoidable provisions of 37 CFR 1.137(a), filed November 30, 2009, to revive the above-identified application.

The petition under 37 CFR 1.137(a) is **DISMISSED AS MOOT**.

In view of the granting of the petition filed under 37 CFR 1.181, the $270 fee petition fee under 1.137(a) submitted with the petition on November 30, 2009 is deemed unnecessary, the fee will also be credited to petitioner's deposit account. Further, an extension of time under 37 CFR 1.136 must be filed prior to the expiration of the maximum extendable period for reply. See In re Application of S., 8 USPQ2d 1630, 1631 (Comm'r Pats. 1988). Since the $1150 extension of time fee submitted with the petition on November 30, 2009 was subsequent to the maximum extendable period for reply, this fee is unnecessary and will be refunded in due course.

Telephone inquiries concerning this decision should be directed to April M. Wise at 571-272-1642. All other inquiries concerning this application should be directed to the Board of Appeals and Interference at their hotline 571-272-9797.

This application is being referred to the Board of Appeals and Interference for re-mailing the Office action of April 8, 2009. The period for reply will run from the mailing date of the Office action.

/dab/
David Bucci
Petitions Examiner
Office of Petitions

UNITED STATES PATENT AND TRADEMARK OFFICE

Commissioner for Patents
United States Patent and Trademark Office
P.O. Box 1450
Alexandria, VA 22313-1450
www.uspto.gov

TRANSPACIFIC LAW GROUP
617 NORTH DELAWARE STREET
SAN MATEO, CA 94401

COPY MAILED

MAY 3 1 2007

OFFICE OF PETITIONS

In re Application of	:	
KUWen et al.	:	
Application No. 10/898,510	:	DECISION ON PETITION
Filed: July 22, 2004	:	TO WITHDRAW
Attorney Docket No. **WENK3003/BEU**	:	FROM RECORD
	:	

This is a decision on the Request to Withdraw as attorney or agent of record under 37 C.F.R. § 1.36(b), filed February 26, 2007.

The request is **NOT APPROVED** as moot.

A review of the file record indicates that the power of attorney to Transpacific Law Group has been revoked by the applicant of the patent application on February 06, 2007. Accordingly, the request to withdraw under 37 C.F.R. § 1.36(b) is moot.

All future communications from the Office will continue to be directed to the below-listed address until otherwise notified by applicant.

Telephone inquires concerning this decision should be directed to Michelle R. Eason at 571-272-4231.

Terri Williams

Terri Williams
Petitions Examiner
Office of Petitions

cc: **BACON & THOMAS, PLLC**
625 SLATERS LANE
FOURTH FLOOR
ALEXANDRIA VA 22314

UNITED STATES PATENT AND TRADEMARK OFFICE

UNITED STATES DEPARTMENT OF COMMERCE
United States Patent and Trademark Office
Address: COMMISSIONER FOR PATENTS
P.O. Box 1450
Alexandria, Virginia 22313-1450
www.uspto.gov

PATENT DOCKET ADMINISTRATOR
LOWENSTEIN SANDLER PC
65 LIVINGSTON AVENUE
ROSELAND, NJ 07068

Mail Date: 04/21/2010

Applicant	: Brigette A. White	: DECISION ON REQUEST FOR
Patent Number	: 7668777	: RECALCULATION of PATENT
Issue Date	: 02/23/2010	: TERM ADJUSTMENT IN VIEW
Appliction No	: 10/898,518	: OF WYETH AND NOTICE OF INTENT TO
Filed	: 07/23/2004	: ISSUE CERTIFICATE OF CORRECTION
		:

The Request for Recalculation is **GRANTED** to the extent indicated.

The patent term adjustment has been determined to be **633** days. The USPTO will *sua sponte* issue a certificate of correction reflecting the amount of PTA days determined by the recalculation.

Prior to the issuance of the certificate of correction, the USPTO will afford patentee an opportunity to be heard and request reconsideration. Accordingly, patentee has **one month or thirty (30) days**, whichever is longer, to file a request for reconsideration of this patent term adjustment calculation. See 35 U.S.C. 154(b)(3)(B)(ii) and 37 CFR 1.322(a)(4). No extensions of time will be granted under 37 CFR 1.136.

Patentee should use document code PET.OP if electronically filing a request for reconsideration of this patent term adjustment calculation. The patentee must also include the information required by 37 CFR 1.705(b)(2) and the fee required by 37 CFR 1.18(e). If patentee does not file a timely request for reconsideration of this patent term adjustment calculation including the information required by 37 CFR 1.705(b)(2) and the fee required by 37 CFR 1.18(e), the USPTO will issue a certificate of correction reflecting the PTA determination noted above.

Patentee should be aware that in order to preserve the right to review in the United States District Court for the District of Columbia of the USPTO patent term adjustment determination, patentee must ensure that he or she also take the steps required under 35 U.S.C. 154(b)(4)(A) in a timely manner. Nothing in the request for recalculation should be construed as providing an alternative time frame for commencing a civil action under 35 U.S.C. 154(b)(4)(A).

Any questions concerning this decision should be directed to the Office of Patent Legal Administration at 571-272-7702.

UNITED STATES PATENT AND TRADEMARK OFFICE

COMMISSIONER FOR PATENTS
UNITED STATES PATENT AND TRADEMARK OFFICE
P.O. BOX 1450
ALEXANDRIA, VA 22313-1450
www.uspto.gov

MAIL

APR 13 2005

DIRECTOR OFFICE
TECHNOLOGY CENTER 2600

MCDERMOTT, WILL & EMERY (LOS ANGELES OFFICE)
2049 CENTURY PARK EAST
34TH FLOOR
LOS ANGELES CA 90067-3208

In re Application of :
KARSTEN, HARRY :
Application No. 10/898,519 : DECISION ON PETITION
Filed: July 23, 2004 : TO MAKE SPECIAL
For: **BREATH ALCOHOL DETECTION SYSTEM WITH IDENTITY VERIFICATION** :

This is a decision on the petition filed July 28, 2004 under Manual of Patent Examination Procedure §708.02, VIII requesting accelerated examination.

The petition under Manual of Patent Examination Procedure §708.02, VIII, must:
(1) be filed prior to receiving any examination by the examiner,
(2) be accompanied by the required fee- $130,
(3) the claims should be directed to a single invention (if it is determined that the claims pertain to more than one invention, then applicant will have to make an election without traverse or forfeit accelerated examination status),
(4) state that a pre-examination search was made, and fully discuss the search method employed, such as classes and subclasses searched, publications, Chemical abstracts, patents, etc. A search made by a foreign patent office satisfies this requirement,
(5) be accompanied by a copy of each of the references most closely related to the subject matter encompassed by the claims if said references are not already of record,
(6) fully discuss the references, pointing out with the particularity required by 37 C.F.R. §1.111 (b) and (c), how the claimed subject matter is patentable over the references.

The petitioner meets all the above-listed requirements. Accordingly, the petition is **GRANTED**.

The application will retain its special status throughout its entire prosecution, including any appeal to the Board of Patent Appeals and Interferences, subject only to diligent prosecution by the applicant. The application file is being forwarded to the examiner for appropriate action in due course.

Kenneth A. Wieder
Special Program Examiner
Technology Center 2600
Communications

UNITED STATES PATENT AND TRADEMARK OFFICE

Commissioner for Patents
United States Patent and Trademark Office
P.O. Box 1450
Alexandria, VA 22313-1450
www.uspto.gov

Paper No. 060705

TOWNSEND AND TOWNSEND AND CREW, LLP
TWO EMBARCADERO CENTER
EIGHTH FLOOR
SAN FRANCISCO CA 94111-3834

JUN 27 2005

In re Application of:	:	
Belov *et al.*	:	
Serial No.: 10/898,530	:	DECISION ON REQUEST TO WITHDRAW FROM RECORD
Filed: July 23, 2004	:	
Attorney Docket No.: **021424-001410US**	:	

This is a decision on the request to withdraw as attorney/agent of record under 37 C.F.R. § 1.36, filed April 18, 2005.

A grantable request to withdraw as attorney of record must be signed by every attorney seeking to withdraw or contain a clear indication that one attorney is signing on behalf of others. A request to withdraw will not be approved unless at least thirty (30) days would remain between the date of approval and the later of the expiration date of a time to file a response or the expiration date of the maximum time period, which can be extended under 37 C.F.R. § 1.136(a).

The request meets all the above stated requirements. The request was signed by Mark D. Barrish, on behalf of himself and all the attorneys/agents of record.

The request is **APPROVED**.

There are no attorneys/agents of record at this time.

All future communications from the Office will be directed to Peter Eng, at the below address, until otherwise notified by applicant.

Inquiries related to this decision should be directed to Clayton E. LaBalle at (571) 272-1594.

Clayton E. LaBalle, Special Programs Examiner
Technology Center 2800
Semiconductors, Electrical and Optical
Systems and Components

cc: Peter Eng (Wilson Sonsini Goodrich Rosati)
650 Page Mill Road
Palo Alto, CA 94304-1050

UNITED STATES PATENT AND TRADEMARK OFFICE

Commissioner for Patents
United States Patent and Trademark Office
P.O. Box 1450
Alexandria, VA 22313-1450
www.uspto.gov

WALL MARJAMA & BILINSKI
101 SOUTH SALINA STREET
SUITE 400
SYRACUSE, NY 13202

COPY MAILED
DEC 19 2005
OFFICE OF PETITIONS

In re Application of	:
Andrew Longacre, Jr., et al	:
Application No. 10/898,536	: DECISION GRANTING PETITION
Filed: July 23, 2004	: UNDER 37 CFR 1.313(c)(2)
Attorney Docket No. 703-006.50.28	:

This is a decision on the petition, filed December 13, 2005, under 37 CFR 1.313(c)(2) to withdraw the above-identified application from issue after payment of the issue fee.

The petition is **GRANTED**.

The above-identified application is withdrawn from issue for consideration of a submission under 37 CFR 1.114 (request for continued examination). See 37 CFR 1.313(c)(2).

Petitioner is advised that the issue fee paid on October 21, 2005 in the above-identified application cannot be refunded. If, however, the above-identified application is again allowed, petitioner may request that it be applied towards the issue fee required by the new Notice of Allowance.[1]

Telephone inquiries should be directed to the undersigned at (571) 272-3218.

This matter is being referred to Technology Center AU 2876 for processing of the request for continued examination under 37 CFR 1.114 and for appropriate action on the amendment and substitute specification filed December 13, 2005.

Frances Hicks
Petitions Examiner
Office of Petitions

---

[1] *The request to apply the issue fee to the new Notice may be satisfied by completing and returning the new Issue Fee Transmittal Form PTOL-85(b) (along with any balance due at the time of payment), which includes the following language thereon: "Commissioner for Patents is requested to apply the Issue Fee and Publication Fee (if any) or re-apply any previously paid issue fee to the application identified above." Petitioner is advised that, whether a fee is indicated as being due or not, the Issue Fee Transmittal Form* ***must*** *be completed and timely submitted to avoid abandonment. Note the language in bold text on the first page of the Notice of Allowance and Fee(s) Due (PTOL-85).*

UNITED STATES PATENT AND TRADEMARK OFFICE

Commissioner for Patents
United States Patent and Trademark Office
P.O. Box 1450
Alexandria, VA 22313-1450
www.uspto.gov

FOLEY AND LARDNER LLP
SUITE 500
3000 K STREET NW
WASHINGTON DC 20007

MAILED

FEB 0 2 2009

OFFICE OF PETITIONS

In re Application of	:	
NIELSEN, Jacob V. et al.	:	
Application No. 10/898,540	:	DECISION ON PETITION
Filed: July 26,2004	:	TO WITHDRAW
Attorney Docket No. **028262-0101**	:	FROM RECORD
	:	

This is a decision on the Request to Withdraw as attorney or agent of record under 37 C.F.R. § 1.36(b), filed November 04, 2008.

The request is **NOT APPROVED** because it is moot.

A review of the file record indicates that the power of attorney to Foley and Lardner LLP has been revoked by the assignee of the patent application on August 27, 2008. Accordingly, the request to withdraw under 37 C.F.R. § 1.36(b) is moot.

All future communications from the Office will continue to be directed to the below-listed address until otherwise notified by applicant.

Telephone inquires concerning this decision should be directed to Michelle R. Eason at 571-272-4231.

Michelle R. Eason
Paralegal Specialist
Office of Petitions

cc: **BLAKELY SOKOLOFF TAYLOR & ZAFMAN LLP**
1279 OAKMEAD PARKWAY
SUNNYVALE CA 94085-4040

UNITED STATES PATENT AND TRADEMARK OFFICE

Commissioner for Patents
United States Patent and Trademark Office
P.O. Box 1450
Alexandria, VA 22313-1450
www.uspto.gov

Chun-Pok Leung
TOWNSEND and TOWNSEND and CREW LLP
Two Embarcadero Center, 8th Floor
San Francisco, California 94111-3834

MAILED
MAR 23 2006
TECHNOLOGY CENTER 2100

In re Application of:
Yuichiro NAGASHIMA et al
Application No. 10/898,569
Filed: July 23, 2004
For: STORAGE SYSTEM

DECISION ON PETITION
TO MAKE SPECIAL

This is a decision on the petition, filed on 22 August 2005 under 37 C.F.R. §102(d) and M.P.E.P. § 708.02(VIII): Accelerated Examination, to make the above-identified application special.

The petition is **GRANTED**.

M.P.E.P. § 708.02, Section VIII which sets out the prerequisites for a grantable petition for Accelerated Examination under 37 C.F.R. § 102(d) states in relevant part:

> A new application (one which has not received any examination by the examiner) may be granted special status provided that applicant (and this term includes applicant's attorney or agent) complies with each of the following items:
>
> (A) Submits a petition to make special accompanied by the fee set forth in 37 CFR 1.17(h);
>
> (B) Presents all claims directed to a single invention, or if the Office determines that all the claims presented are not obviously directed to a single invention, will make an election without traverse as a prerequisite to the grant of special status;
>
> (C) Submits a statement(s) that a pre-examination search was made, listing the field of search by class and subclass, publication, Chemical Abstracts, foreign patents, etc. A search made by a foreign patent office satisfies this requirement;
>
> (D) Submits one copy each of the references deemed most closely related to the subject matter encompassed by the claims if said references are not already of record; and
>
> (E) Submits a detailed discussion of the references, which discussion points out, with the particularity required by 37 CFR 1.111 (b) and (c), how the claimed subject matter is patentable over the references.

Applicant's submission of 22 August 2005 meets all the criteria set out above. Accordingly, the petition is **GRANTED**. The application file is being forwarded to the Examiner for accelerated examination in accordance with M.P.E.P. § 708.02. If the

application is subsequently allowed, it will be given priority for printing. See M.P.E.P. § 1309.

Vincent N. Trans
Special Program Examiner
Technology Center 2100
Computer Architecture, Software, and
Information Security
571-272-3613

UNITED STATES PATENT AND TRADEMARK OFFICE

Commissioner for Patents
United States Patent and Trademark Office
P.O. Box 1450
Alexandria, VA 22313-1450
www.uspto.gov

FOLEY & LARDNER LLP
975 PAGE MILL ROAD
PALO ALTO CA 94304

COPY MAILED

MAR 2 4 2008

OFFICE OF PETITIONS

In re Application of	:	
Kinradi et al.	:	
Application No. 10/898576	:	
Filing or 371(c) Date: 07/23/2004	:	ON PETITION
Attorney Docket Number:	:	
342837-1952	:	

This decision is in response to the Petition under 37 CFR 1.182 to change inventor's name, filed September 18, 2007. The delay in treating this petition is regretted.

The MPEP 605.04(c), Inventor Changes Name, provides

> In cases where an inventor's name has been changed after the application has been filed and the inventor desires to change his or her name on the application, he or she must submit a petition under 37 CFR 1.182. Applicants are also strongly encouraged to submit an application data sheet (37 CFR 1.76) showing the new name. The petition should be directed to the attention of the Office of Petitions. The petition must include an appropriate petition fee and a statement signed by the inventor setting forth both names and the procedure whereby the change of name was effected, or a copy of the court order.[1]

The petition is hereby **granted**.

The name of inventor Francine S. Grant has been changed to Francine S. Farouz and the name Francine S. Farouz has been entered and made of record in the above-identified application.

Telephone inquiries concerning this matter should be directed to the undersigned at (571) 272-3232.

Derek L. Woods
Attorney
Office of Petitions

Enclosure: Corrected Filing Receipt

[1] The petition fee increased to $400.00 effective December 8, 2004. The balance due, $270.00, has been charged to Petitioner's deposit account as authorized in the petition.

UNITED STATES PATENT AND TRADEMARK OFFICE

UNITED STATES DEPARTMENT OF COMMERCE
United States Patent and Trademark Office
Address: COMMISSIONER FOR PATENTS
P.O. Box 1450
Alexandria, Virginia 22313-1450
www.uspto.gov

APPLICATION NUMBER	FILING or 371(c) DATE	GRP ART UNIT	FIL FEE REC'D	ATTY.DOCKET.NO	TOT CLAIMS	IND CLAIMS
10/898,576	07/23/2004	1624	1070	342837-1952	10	1

CONFIRMATION NO. 4030

CORRECTED FILING RECEIPT

38706
FOLEY & LARDNER LLP
975 PAGE MILL ROAD
PALO ALTO, CA 94304

OC000000029008242

Date Mailed: 03/21/2008

Receipt is acknowledged of this non-provisional patent application. The application will be taken up for examination in due course. Applicant will be notified as to the results of the examination. Any correspondence concerning the application must include the following identification information: the U.S. APPLICATION NUMBER, FILING DATE, NAME OF APPLICANT, and TITLE OF INVENTION. Fees transmitted by check or draft are subject to collection. Please verify the accuracy of the data presented on this receipt. **If an error is noted on this Filing Receipt, please write to the Office of Initial Patent Examination's Filing Receipt Corrections. Please provide a copy of this Filing Receipt with the changes noted thereon. If you received a "Notice to File Missing Parts" for this application, please submit any corrections to this Filing Receipt with your reply to the Notice. When the USPTO processes the reply to the Notice, the USPTO will generate another Filing Receipt incorporating the requested corrections**

Applicant(s)

Andrei W. Konradi, Burlingame, CA;
Michael A. Pleiss, Sunnyvale, CA;
Eugene D. Thorsett, Half Moon Bay, CA;
Darren B. Dressen, San Francisco, CA;
Francine S. Farouz, Mercer Island, WA;
Christopher Semko, Fremont, CA;
Ying-Zi Xu, Palo Alto, CA;
Frank Stappenbeck, San Francisco, CA;

Assignment For Published Patent Application

Elan Pharmaceuticals, Inc.
Wyeth

Power of Attorney: The patent practitioners associated with Customer Number 38706

Domestic Priority data as claimed by applicant

This application is a DIV of 09/910,466 07/19/2001 PAT 6,794,506
which claims benefit of 60/220,131 07/21/2000

Foreign Applications

If Required, Foreign Filing License Granted: 09/20/2004

The country code and number of your priority application, to be used for filing abroad under the Paris Convention, is **US 10/898,576**

Projected Publication Date: Not Applicable

Non-Publication Request: No

Early Publication Request: No
Title

3-(HETEROARYL) ALANINE DERIVATIVES-INHIBITORS OF LEUKOCYTE ADHESION MEDIATED BY VLA-4

Preliminary Class

514

PROTECTING YOUR INVENTION OUTSIDE THE UNITED STATES

Since the rights granted by a U.S. patent extend only throughout the territory of the United States and have no effect in a foreign country, an inventor who wishes patent protection in another country must apply for a patent in a specific country or in regional patent offices. Applicants may wish to consider the filing of an international application under the Patent Cooperation Treaty (PCT). An international (PCT) application generally has the same effect as a regular national patent application in each PCT-member country. The PCT process **simplifies** the filing of patent applications on the same invention in member countries, but **does not result** in a grant of "an international patent" and does not eliminate the need of applicants to file additional documents and fees in countries where patent protection is desired.

Almost every country has its own patent law, and a person desiring a patent in a particular country must make an application for patent in that country in accordance with its particular laws. Since the laws of many countries differ in various respects from the patent law of the United States, applicants are advised to seek guidance from specific foreign countries to ensure that patent rights are not lost prematurely.

Applicants also are advised that in the case of inventions made in the United States, the Director of the USPTO must issue a license before applicants can apply for a patent in a foreign country. The filing of a U.S. patent application serves as a request for a foreign filing license. The application's filing receipt contains further information and guidance as to the status of applicant's license for foreign filing.

Applicants may wish to consult the USPTO booklet, "General Information Concerning Patents" (specifically, the section entitled "Treaties and Foreign Patents") for more information on timeframes and deadlines for filing foreign patent applications. The guide is available either by contacting the USPTO Contact Center at 800-786-9199, or it can be viewed on the USPTO website at http://www.uspto.gov/web/offices/pac/doc/general/index.html.

For information on preventing theft of your intellectual property (patents, trademarks and copyrights), you may wish to consult the U.S. Government website, http://www.stopfakes.gov. Part of a Department of Commerce initiative, this website includes self-help "toolkits" giving innovators guidance on how to protect intellectual property in specific countries such as China, Korea and Mexico. For questions regarding patent enforcement issues, applicants may call the U.S. Government hotline at 1-866-999-HALT (1-866-999-4158).

LICENSE FOR FOREIGN FILING UNDER

Title 35, United States Code, Section 184

Title 37, Code of Federal Regulations, 5.11 & 5.15

GRANTED

The applicant has been granted a license under 35 U.S.C. 184, if the phrase "IF REQUIRED, FOREIGN FILING LICENSE GRANTED" followed by a date appears on this form. Such licenses are issued in all applications where the conditions for issuance of a license have been met, regardless of whether or not a license may be required as set forth in 37 CFR 5.15. The scope and limitations of this license are set forth in 37 CFR 5.15(a) unless an earlier license has been issued under 37 CFR 5.15(b). The license is subject to revocation upon written notification. The date indicated is the effective date of the license, unless an earlier license of similar scope has been granted under 37 CFR 5.13 or 5.14.

This license is to be retained by the licensee and may be used at any time on or after the effective date thereof unless it is revoked. This license is automatically transferred to any related applications(s) filed under 37 CFR 1.53(d). This license is not retroactive.

The grant of a license does not in any way lessen the responsibility of a licensee for the security of the subject matter as imposed by any Government contract or the provisions of existing laws relating to espionage and the national security or the export of technical data. Licensees should apprise themselves of current regulations especially with respect to certain countries, of other agencies, particularly the Office of Defense Trade Controls, Department of State (with respect to Arms, Munitions and Implements of War (22 CFR 121-128)); the Bureau of Industry and Security, Department of Commerce (15 CFR parts 730-774); the Office of Foreign AssetsControl, Department of Treasury (31 CFR Parts 500+) and the Department of Energy.

NOT GRANTED

No license under 35 U.S.C. 184 has been granted at this time, if the phrase "IF REQUIRED, FOREIGN FILING LICENSE GRANTED" DOES NOT appear on this form. Applicant may still petition for a license under 37 CFR 5.12, if a license is desired before the expiration of 6 months from the filing date of the application. If 6 months has lapsed from the filing date of this application and the licensee has not received any indication of a secrecy order under 35 U.S.C. 181, the licensee may foreign file the application pursuant to 37 CFR 5.15(b).

UNITED STATES PATENT AND TRADEMARK OFFICE

Commissioner for Patents
United States Patent and Trademark Office
P.O. Box 1450
Alexandria, VA 22313-1450
www.uspto.gov

FISH & RICHARDSON, PC
P.O. BOX 1022
MINNEAPOLIS MN 55440-1022

COPY MAILED

DEC 28 2007

OFFICE OF PETITIONS

In re Application of	:	
Lang et al.	:	
Application No.: 10/898581	:	ON PETITION
Filing or 371(c) Date: 07/23/2004	:	
Title of Invention:	:	
P-38 KINASE INHIBITORS	:	

This is a decision on the petition under 37 CFR 1.137(b), filed October 26, 2007, to revive the above-identified application.

This Petition is hereby **dismissed**.

Any further petition to revive the above-identified application must be submitted within TWO (2) MONTHS from the mail date of this decision. Extensions of time under 37 CFR 1.136(a) are permitted. The reconsideration request should include a cover letter entitled "Request for Reconsideration of Petition under [insert the applicable code section]". This is **not** final agency action within the meaning of 5 U.S.C. § 704.

Background

The above-identified application became abandoned for failure to timely reply to the Office communication, mailed February 26, 2007. The Office communication set a one (1) month period for reply. Extensions of time under 37 CFR 1.136(a) were available. No complete and proper reply having been received, the application became abandoned on March 27, 2007. A Notice of Abandonment was mailed September 19, 2007.

Applicant files the present petition[1], petition fee, and statement of unintentional delay; however, a reply to the Office communication has not been filed.

A Grantable Petition Under 37 CFR 1.137(a)

A grantable petition under 37 CFR 1.137(b) must be accompanied by: (1) the required reply, unless previously filed; (2) the petition fee as set forth in 37 CFR 1.17(m); (3) a statement that the entire delay in filing the required reply from the due date for the reply until the filing of a

[1] It is noted that while the petition form identifies the application number as 11/898,581, the statement filed with the petition identifies the serial number as 10/858,581.

grantable petition pursuant to 37 CFR 1.137(b) was unintentional; and (4) any terminal disclaimer (and fee as set forth in 37 CFR 1.20(d)) required by 37 CFR 1.137(d). Where there is a question as to whether either the abandonment or the delay in filing a petition under 37 CFR 1.137 was unintentional, the Director may require additional information. See MPEP 711.03(c)(II)(C) and (D). The petition lacks item(s) (1).

As to item (1), a reply to the Office communication is required. A copy of the Office communication, mailed February 26, 2007, is enclosed.

The application file does not indicate a change of address has been filed in this case, although the address given on the petition differs from the address of record. A change of address should be filed in this case in accordance with MPEP 601.03. A courtesy copy of this decision is being mailed to the address noted on the petition. However, until otherwise instructed, all future correspondence regarding this application will be mailed solely to the address of record.

Further correspondence with respect to this matter should be addressed as follows:

By mail: Director for Patents
PO Box 1450
Alexandria, VA 22313-1450

By FAX: (571) 273-8300
Attn: Office of Petitions

By hand: Customer Service Window
Randolph Building
401 Dulany Street
Alexandria, VA 22314

Telephone inquiries concerning this matter should be directed to the undersigned at (571) 272-3232.

Derek L. Woods
Attorney
Office of Petitions

Enclosure: Office communication, mailed February 26, 2007

CC: NOVARTIS
CORPORATE INTELLECTUAL PROPERTY
ONE HEALTH PLAZA
EAST HANOVER, NJ 07936-1080

UNITED STATES PATENT AND TRADEMARK OFFICE

UNITED STATES DEPARTMENT OF COMMERCE
United States Patent and Trademark Office
Address: COMMISSIONER FOR PATENTS
P.O. Box 1450
Alexandria, Virginia 22313-1450
www.uspto.gov

APPLICATION NO.	FILING DATE	FIRST NAMED INVENTOR	ATTORNEY DOCKET NO.	CONFIRMATION NO.
10/898,581	07/23/2004	Hengyuan Lang	17104-003001	4090

20985 7590 02/26/2007
FISH & RICHARDSON, PC
P.O. BOX 1022
MINNEAPOLIS, MN 55440-1022

EXAMINER
TRUONG, TAMTHOM NGO

ART UNIT	PAPER NUMBER
1624	

SHORTENED STATUTORY PERIOD OF RESPONSE	MAIL DATE	DELIVERY MODE
31 DAYS	02/26/2007	PAPER

Please find below and/or attached an Office communication concerning this application or proceeding.

If NO period for reply is specified above, the maximum statutory period will apply and will expire 6 MONTHS from the mailing date of this communication.

Office Action Summary	Application No.	Applicant(s)
	10/898,581	LANG ET AL.
	Examiner	Art Unit
	Tamthom N. Truong	1624

-- The MAILING DATE of this communication appears on the cover sheet with the correspondence address --

Period for Reply

A SHORTENED STATUTORY PERIOD FOR REPLY IS SET TO EXPIRE 1 MONTH(S) OR THIRTY (30) DAYS, WHICHEVER IS LONGER, FROM THE MAILING DATE OF THIS COMMUNICATION.

- Extensions of time may be available under the provisions of 37 CFR 1.136(a). In no event, however, may a reply be timely filed after SIX (6) MONTHS from the mailing date of this communication.
- If NO period for reply is specified above, the maximum statutory period will apply and will expire SIX (6) MONTHS from the mailing date of this communication.
- Failure to reply within the set or extended period for reply will, by statute, cause the application to become ABANDONED (35 U.S.C. § 133). Any reply received by the Office later than three months after the mailing date of this communication, even if timely filed, may reduce any earned patent term adjustment. See 37 CFR 1.704(b).

Status

1)☐ Responsive to communication(s) filed on _____.

2a)☐ This action is **FINAL**. 2b)☐ This action is non-final.

3)☐ Since this application is in condition for allowance except for formal matters, prosecution as to the merits is closed in accordance with the practice under *Ex parte Quayle*, 1935 C.D. 11, 453 O.G. 213.

Disposition of Claims

4)☒ Claim(s) 1-61 is/are pending in the application.

4a) Of the above claim(s) _____ is/are withdrawn from consideration.

5)☐ Claim(s) _____ is/are allowed.

6)☐ Claim(s) _____ is/are rejected.

7)☐ Claim(s) _____ is/are objected to.

8)☒ Claim(s) 1-61 are subject to restriction and/or election requirement.

Application Papers

9)☐ The specification is objected to by the Examiner.

10)☐ The drawing(s) filed on _____ is/are: a)☐ accepted or b)☐ objected to by the Examiner.

Applicant may not request that any objection to the drawing(s) be held in abeyance. See 37 CFR 1.85(a).

Replacement drawing sheet(s) including the correction is required if the drawing(s) is objected to. See 37 CFR 1.121(d).

11)☐ The oath or declaration is objected to by the Examiner. Note the attached Office Action or form PTO-152.

Priority under 35 U.S.C. § 119

12)☐ Acknowledgment is made of a claim for foreign priority under 35 U.S.C. § 119(a)-(d) or (f).

a)☐ All b)☐ Some * c)☐ None of:

1.☐ Certified copies of the priority documents have been received.

2.☐ Certified copies of the priority documents have been received in Application No. _____.

3.☐ Copies of the certified copies of the priority documents have been received in this National Stage application from the International Bureau (PCT Rule 17.2(a)).

* See the attached detailed Office action for a list of the certified copies not received.

Attachment(s)

1) ☐ Notice of References Cited (PTO-892)

2) ☐ Notice of Draftsperson's Patent Drawing Review (PTO-948)

3) ☒ Information Disclosure Statement(s) (PTO/SB/08) Paper No(s)/Mail Date 12-10-04.

4) ☐ Interview Summary (PTO-413) Paper No(s)/Mail Date. _____ .

5) ☐ Notice of Informal Patent Application

6) ☒ Other: EAST Search History.

Election/Restrictions

Restriction to one of the following inventions is required under 35 U.S.C. 121:

Group 1: Claims 1-5, 11-37, 54 and 55 (in part), drawn to compounds of formula I which becomes formulae II, III, IV or V, and pharmaceutical composition thereof, classified in classes 514, 544 and 546, various subclasses depending on substituents. Further restriction and/or election of species will be required if this group is elected.

Group 2: Claims 1, 6-37, 54 and 55 (in part), drawn to compounds of formula I which becomes formulae VI, VII (wherein R^{11} is 1,3,4-oxadiazolyl) or VIII, IX and pharmaceutical composition thereof, classified in classes 514, 544 and 546, various subclasses depending on substituents. Further restriction and/or election of species will be required if this group is elected.

Group 3: Claims 1, 11-37, 54 and 55 (in part), drawn to the remaining compounds of formula I, and pharmaceutical composition thereof, classified in classes 514, 544 and 546, various subclasses depending on substituents. Further restriction and/or election of species will be required if this group is elected.

Group 4: Claims 38-40, 45, 46, 48, 49, 50 and 58 (in part) drawn to a method of treating, preventing or ameliorating one or more symptoms of p38 kinase mediated diseases or disorders using a compound of formula I, classified in classes 514, 544 and 546, various subclasses depending on substituents. Further restriction and/or election of species will be required if this group is elected.

Group 5: Claims 41-44, 53, 59 and 60 (in part), drawn to a method of inhibiting the expression of inducible pro-inflammatory proteins using a compound of formula I, classified in classes 514, 544 and 546, various subclasses depending on substituents. Further restriction and/or election of species will be required if this group is elected.

Group 6: Claims 47, 51, 52 and 61 (in part), drawn to a method of treating, preventing or ameliorating one or more symptoms of a cytokine mediated disease or disorder using a compound of formula I, classified in classes 514, 544 and 546, various subclasses depending on substituents. Further restriction and/or election of species will be required if this group is elected.

Group 7: Claim 56, drawn to a pharmaceutical composition comprising a compound of formula I and an additional agent, classified in classes 514, 544 and 546, various subclasses depending on substituents. Further restriction and/or election of species will be required if this group is elected.

Group 8: Claim 57, drawn to an article of manufacture comprising packaging material, and a compound of formula I (in claim 1), classified in classes 514 and 206, various subclasses depending on substituents. Further restriction and/or election of species will be required if this group is elected.

Inventions of Groups 1-8 are unrelated. Inventions are unrelated if it can be shown that they are not disclosed as capable of use together and they have different modes of operation, different functions, or different effects (MPEP § 806.04, MPEP § 808.01). In the instant case the different inventions are distinct from each other by the combination of rings A and B, variables R^1, R^2, X and Y as well as a packaging article, a combined formulation, and different methods of use.

The inventions of Groups 1-3 have a common core of ring A, which appears as a phenyl group, and does not sufficiently define the invention, and is not a contribution to the art. It is the combination of rings A and B as well as variables R^1, R^2, X and Y that gives compounds of each group their unique physical, chemical properties and biological activities. Depending on what they represent, the claimed formula would have different structure. Thus, a reference anticipated or rendered obvious compounds of one group would not do so to those of other groups. Therefore, a separate search is required for each group.

The inventions of Groups 4-6 are drawn to various methods of treating diseases with different etiologies, which require additional search and examination beyond the scope of the claimed compound. A reference reading on the compounds would not necessarily read on any one of the claimed methods. Similarly, the inventions of groups 7 (a combined formulation) and

8 (an article of manufacture) require further search in different classes and subclasses of the additional agents.

Therefore, the search and examination for all 8 groups would impose a serious burden on the examiner in charge of this invention. Note, a preliminary search in EAST yields a total of 31,485 hits which clearly shows an overwhelming number of references for consideration.

The examiner has required restriction between product and method claims. Where applicant elects claims directed to the product, and a product claim is subsequently found allowable, withdrawn method claims that depend from or otherwise include all the limitations of the allowable product claim will be rejoined in accordance with the provisions of MPEP § 821.04. **Method claims that depend from or otherwise include all the limitations of the patentable product** will be entered as a matter of right if the amendment is presented prior to final rejection or allowance, whichever is earlier. Amendments submitted after final rejection are governed by 37 CFR 1.116; amendments submitted after allowance are governed by 37 CFR 1.312.

In the event of rejoinder, the requirement for restriction between the product claims and the rejoined method claims will be withdrawn, and the rejoined method claims **will be fully examined for patentability in accordance with 37 CFR 1.104**. Thus, to be allowable, **the rejoined claims must meet all criteria for patentability including the requirements of 35 U.S.C. 101, 102, 103, and 112.** Until an elected product claim is found allowable, an otherwise proper restriction requirement between product claims and method claims may be maintained. Withdrawn method claims that are not commensurate in scope with an allowed product claim

will not be rejoined. See "Guidance on Treatment of Product and Process Claims in light of In re Ochiai, In re Brouwer and 35 U.S.C. § 103(b)," 1184 O.G. 86 (March 26, 1996). Additionally, in order to retain the right to rejoinder in accordance with the above policy, Applicant is advised that the method claims should be amended during prosecution either to maintain dependency on the product claims or to otherwise include the limitations of the product claims. **Failure to do so may result in a loss of the right to rejoinder.** Further, note that the prohibition against double patenting rejections of 35 U.S.C. 121 does not apply where the restriction requirement is withdrawn by the examiner before the patent issues. See MPEP § 804.01.

A telephone call was made to Ms. Lori Moncayo (Mr. Rieger's secretary @ 858-314-1200) on 2-5-07 to relay the above restriction requirement, but she indicated that a written restriction would be requested.

Applicant is reminded that upon the cancellation of claims to a non-elected invention, the inventorship must be amended in compliance with 37 CFR 1.48(b) if one or more of the currently named inventors is no longer an inventor of at least one claim remaining in the application. Any amendment of inventorship must be accompanied by a request under 37 CFR 1.48(b) and by the fee required under 37 CFR 1.17(i).

Any inquiry concerning this communication or earlier communications from the examiner should be directed to Tamthom N. Truong whose telephone number is 571-272-0676. The examiner can normally be reached on M, T and Th (9:00-5:30).

If attempts to reach the examiner by telephone are unsuccessful, the examiner's supervisor, James O. Wilson can be reached on 571-272-0661. The fax phone number for the organization where this application or proceeding is assigned is 571-273-8300.

Information regarding the status of an application may be obtained from the Patent Application Information Retrieval (PAIR) system. Status information for published applications may be obtained from either Private PAIR or Public PAIR. Status information for unpublished applications is available through Private PAIR only. For more information about the PAIR system, see http://pair-direct.uspto.gov. Should you have questions on access to the Private PAIR system, contact the Electronic Business Center (EBC) at 866-217-9197 (toll-free). If you would like assistance from a USPTO Customer Service Representative or access to the automated information system, call 800-786-9199 (IN USA OR CANADA) or 571-272-1000.

***
2-5-07

Tamthom N. Truong
Examiner
Art Unit 1624

JAMES O. WILSON
SUPERVISORY PATENT EXAMINER
TECHNOLOGY CENTER 1600

UNITED STATES PATENT AND TRADEMARK OFFICE

Commissioner for Patents
United States Patent and Trademark Office
P.O. Box 1450
Alexandria, VA 22313-1450
www.uspto.gov

FISH & RICHARDSON, PC
P.O. BOX 1022
MINNEAPOLIS MN 55440-1022

COPY MAILED

APR 30 2008

OFFICE OF PETITIONS

In re Application of	:	
Lang et al.	:	
Application No.: 10/898581	:	ON PETITION
Filing or 371(c) Date: 07/23/2004	:	
Title of Invention:	:	
P-38 KINASE INHIBITORS	:	

This is a decision on the renewed petition under 37 CFR 1.137(b), filed March 28, 2008, to revive the above-identified application.

This Petition is hereby **granted**.

Background

The above-identified application became abandoned for failure to timely reply to the Office communication, mailed February 26, 2007. The Office communication set a one (1) month period for reply. Extensions of time under 37 CFR 1.136(a) were available. No complete and proper reply having been received, the application became abandoned on March 27, 2007. A Notice of Abandonment was mailed September 19, 2007.

Applicant files the present petition, petition fee, and statement of unintentional delay; however, a reply to the Office communication has not been filed.

A petition to revive the above-identified application under 37 CFR 1.137(b), filed October 26, 2007, was dismissed in a Decision mailed December 28, 2007, for failing to meet the requirements of a grantable petition.

Applicant files the present renewed petition and response to the Office communication. The petition satisfies the conditions for revival pursuant to the provisions of 37 CFR 1.137(b) in that (1) the reply in the form of a response to the Restriction/Election Requirement; (2) the petition fee; and (3) the required statement of unintentional delay are filed with the present petition. Accordingly, the reply is accepted as having been unintentionally delayed.

> Where a correspondence address has been established on filing of the application or changed pursuant to 37 CFR 1.33(a)(1) (prior to the filing of an executed oath or declaration under 37 CFR 1.63 by any of the inventors), that correspondence address remains in effect upon filing of an executed oath or declaration under 37 CFR 1.63 and can only be subsequently changed pursuant to 37 CFR 1.33(a)(2). Under 37 CFR 1.33(a)(2), where an executed oath or declaration under 37 CFR 1.63 has been filed by any of the inventors, the correspondence address may be changed by (A) a patent practitioner of record, (B) an assignee as provided for under 37 CFR 3.71(b), or (C) all of the applicants (37 CFR 1.41(b)) for patent, unless there is an assignee of the entire interest and such assignee has taken action in the application in accordance with 37 CFR 3.71. See 37 CFR1.33(a)(2).

A review of the Change of Correspondence Address reveals that it has not been executed by (A) a patent practitioner of record, (B) an assignee as provided for under 37 CFR 3.71(b), or (C) all of the applicants (37 CFR 1.41(b)) for patent. A proper Change of Correspondence Address is required.

This application is being forwarded to Technology Center Art Unit 1624 for processing of the response in due course.

Telephone inquiries concerning this decision should be directed to the undersigned at (571) 272-3232.

Derek L. Woods
Attorney
Office of Petitions

CC: NOVARTIS INSTITUTE FOR BIOMEDICAL RESEARCH
400 TECHNOLOGY SQUARE
CAMBRIDGE, MA 02139

UNITED STATES PATENT AND TRADEMARK OFFICE

Commissioner for Patents
United States Patent and Trademark Office
P.O. Box 1450
Alexandria, VA 22313-1450
www.uspto.gov

COPY MAILED

SEP 14 2009

OFFICE OF PETITIONS

MINTZ LEVIN COHN FERRIS GLOVSKY AND POPEO PC
ONE FINANCIAL CENTER
BOSTON MA 02111

In re Application of	:	
Mayers, et al.	:	
Application No. 10/898,585	:	DECISION ON PETITION
Filed: July 23, 2004	:	UNDER 37 CFR 1.78(a)(3)
Attorney Docket No. 28089-502CIP	:	

This is a decision on the petition under 37 CFR 1.78(a)(3), filed June 9, 2009, to accept an unintentionally delayed claim under 35 U.S.C. § 120 for the benefit of priority to non-provisional application No. 09/314,422, set forth in the amendment filed with the petition.

The petition is **DISMISSED**.

A petition for acceptance of a claim for late priority under 37 CFR 1.78(a)(3) is only applicable to those applications filed on or after November 29, 2000. Further, the petition is appropriate only after the expiration of the period specified in 37 CFR 1.78(a)(2)(ii). In addition, the petition under 37 CFR 1.78(a)(3) must be accompanied by:

(1) the reference required by 35 U.S.C. § 120 and 37 CFR 1.78(a)(2)(i) of the prior-filed application, unless previously submitted;
(2) the surcharge set forth in § 1.17(t); and
(3) a statement that the entire delay between the date the claim was due under 37 CFR 1.78(a)(2)(ii) and the date the claim was filed was unintentional. The Director may require additional information where there is a question whether the delay was unintentional.

The petition does not satisfy item (1) above.

The reference to add the above noted application in the first sentence of the specification on page one following the title is not acceptable as drafted since it improperly incorporates by reference that application. An incorporation by reference statement added after an application's filing date is not effective because no new matter can be added to an application after its filing date (See 35 U.S.C. § 132(a)). If

an incorporation by reference statement is included in an amendment to the specification to add a benefit claim under 35 U.S.C. § 120 after the filing date of the application, the amendment would not be proper. When a benefit claim under 35 U.S.C. § 120 is submitted after the filing of an application, the reference to the prior application cannot include an incorporation by reference statement of the prior application. See Dart Industries v. Banner, 636 F.2d 684, 207 USPQ 273 (C.A.D.C. 1980). Note MPEP §§ 201.06(c) and 608.04(b).

If reconsideration of this decision is desired, a renewed petition under 37 CFR § 1.78(a)(3) and an Application Data Sheet or an amendment (complying with the provisions of 37 CFR 1.121 and 37 CFR 1.76(b)(5)) to correct the above matters are required.

Further correspondence with respect to this matter should be addressed as follows:

By mail: Mail Stop PETITIONS
Commissioner for Patents
Post Office Box 1450
Alexandria, VA 22313-1450

By hand: Customer Service Window
Mail Stop Petitions
Randolph Building
401 Dulany Street
Alexandria, VA 22314

By fax: (571) 273-8300
ATTN: Office of Petitions

Any questions concerning this matter may be directed to Petitions Attorney Cliff Congo at (571) 272-3207.

Anthony Knight
Supervisor
Office of Petitions

UNITED STATES PATENT AND TRADEMARK OFFICE

Commissioner for Patents
United States Patent and Trademark Office
P.O. Box 1450
Alexandria, VA 22313-1450
www.uspto.gov

COPY MAILED

NOV 30 2009

OFFICE OF PETITIONS

MINTZ LEVIN COHN FERRIS GLOVSKY AND POPEO PC
ONE FINANCIAL CENTER
BOSTON MA 02111

In re Application of	:	
Mayers, et al.	:	
Application No. 10/898,585	:	DECISION ON PETITION
Filed: July 23, 2004	:	UNDER 37 CFR 1.78(a)(3)
Attorney Docket No. 28089-502CIP	:	

This is a decision on the renewed petition under 37 CFR 1.78(a)(3), filed November 13, 2009, to accept an unintentionally delayed claim under 35 U.S.C. § 120 for the benefit of priority to non-provisional application No. 09/314,422, set forth in the amendment filed with the petition.

The petition is **GRANTED**.

A petition for acceptance of a claim for late priority under 37 CFR 1.78(a)(3) is only applicable to those applications filed on or after November 29, 2000. Further, the petition is appropriate only after the expiration of the period specified in 37 CFR 1.78(a)(2)(ii). In addition, the petition under 37 CFR 1.78(a)(3) must be accompanied by:

(1) the reference required by 35 U.S.C. § 120 and 37 CFR 1.78(a)(2)(i) of the prior-filed application, unless previously submitted;
(2) the surcharge set forth in § 1.17(t); and
(3) a statement that the entire delay between the date the claim was due under 37 CFR 1.78(a)(2)(ii) and the date the claim was filed was unintentional. The Director may require additional information where there is a question whether the delay was unintentional.

Applicants filed a petition under 37 CFR 1.78(a)(3) on June 9, 2009. However, the petition was dismissed in a decision mailed on September 14, 2009. The petition was dismissed because the Amendment submitted with the petition improperly incorporated by reference application no. 09/314,422.

All of the above requirements having been satisfied, the late claim for priority under 35 U.S.C. § 120 is accepted as being unintentionally delayed.

The granting of the petition to accept the delayed benefit claim to the prior-filed application under 37 CFR 1.78(a)(3) should not be construed as meaning that this application is entitled to the benefit of the prior-filed application. In order for this application to be entitled to the benefit of the prior-filed application, all other requirements under 35 U.S.C. § 120 and 37 CFR 1.78(a)(1) and (a)(2) must be met. Similarly, the fact that the corrected Filing Receipt accompanying this decision on petition includes the prior-filed application should not be construed as meaning that applicant is entitled to the claim for benefit of priority to the prior-filed application noted thereon. Accordingly, the examiner will, in due course, consider this benefit claim and determine whether the application is entitled to the benefit of the earlier filing date.

A corrected Filing Receipt, which includes the priority claim to the prior-filed nonprovisional application, accompanies this decision on petition.

The application is being forwarded to Group Art Unit 1642.

Any questions concerning this matter may be directed to Petitions Attorney Cliff Congo at (571) 272-3207.

Anthony Knight
Supervisor
Office of Petitions

UNITED STATES PATENT AND TRADEMARK OFFICE

UNITED STATES DEPARTMENT OF COMMERCE
United States Patent and Trademark Office
Address: COMMISSIONER FOR PATENTS
P.O. Box 1450
Alexandria, Virginia 22313-1450
www.uspto.gov

APPLICATION NUMBER	FILING or 371(c) DATE	GRP ART UNIT	FIL FEE REC'D	ATTY.DOCKET.NO	TOT CLAIMS	IND CLAIMS
10/898,585	07/23/2004	1642	745	28089-502CIP	48	4

CONFIRMATION NO. 4103

CORRECTED FILING RECEIPT

30623
MINTZ, LEVIN, COHN, FERRIS, GLOVSKY AND POPEO, P.C
ONE FINANCIAL CENTER
BOSTON, MA 02111

OC000000038970096

Date Mailed: 11/25/2009

Receipt is acknowledged of this non-provisional patent application. The application will be taken up for examination in due course. Applicant will be notified as to the results of the examination. Any correspondence concerning the application must include the following identification information: the U.S. APPLICATION NUMBER, FILING DATE, NAME OF APPLICANT, and TITLE OF INVENTION. Fees transmitted by check or draft are subject to collection. Please verify the accuracy of the data presented on this receipt. **If an error is noted on this Filing Receipt, please submit a written request for a Filing Receipt Correction. Please provide a copy of this Filing Receipt with the changes noted thereon. If you received a "Notice to File Missing Parts" for this application, please submit any corrections to this Filing Receipt with your reply to the Notice. When the USPTO processes the reply to the Notice, the USPTO will generate another Filing Receipt incorporating the requested corrections**

Applicant(s)

George L. Mayers, Gainesville, FL;
Samuel Rose, Emeryville, CA, Deceased;
Lottie Rose, Emeryville, CA, Legal Representative;

Power of Attorney: The patent practitioners associated with Customer Number 30623

Domestic Priority data as claimed by applicant

This application is a CIP of 10/226,288 08/22/2002 ABN
which is a DIV of 09/314,422 05/18/1999 PAT 6,468,503
which is a DIV of 08/782,219 01/13/1997 PAT 6,080,383

Foreign Applications

If Required, Foreign Filing License Granted: 09/29/2004

The country code and number of your priority application, to be used for filing abroad under the Paris Convention, is **US 10/898,585**

Projected Publication Date: Not Applicable

Non-Publication Request: No

Early Publication Request: No
**** SMALL ENTITY ****

Title

Method and composition for the treatment of cancer by the enzymatic conversion of soluble radioactive toxic precipitates in the cancer

Preliminary Class

424

PROTECTING YOUR INVENTION OUTSIDE THE UNITED STATES

Since the rights granted by a U.S. patent extend only throughout the territory of the United States and have no effect in a foreign country, an inventor who wishes patent protection in another country must apply for a patent in a specific country or in regional patent offices. Applicants may wish to consider the filing of an international application under the Patent Cooperation Treaty (PCT). An international (PCT) application generally has the same effect as a regular national patent application in each PCT-member country. The PCT process **simplifies** the filing of patent applications on the same invention in member countries, but **does not result** in a grant of "an international patent" and does not eliminate the need of applicants to file additional documents and fees in countries where patent protection is desired.

Almost every country has its own patent law, and a person desiring a patent in a particular country must make an application for patent in that country in accordance with its particular laws. Since the laws of many countries differ in various respects from the patent law of the United States, applicants are advised to seek guidance from specific foreign countries to ensure that patent rights are not lost prematurely.

Applicants also are advised that in the case of inventions made in the United States, the Director of the USPTO must issue a license before applicants can apply for a patent in a foreign country. The filing of a U.S. patent application serves as a request for a foreign filing license. The application's filing receipt contains further information and guidance as to the status of applicant's license for foreign filing.

Applicants may wish to consult the USPTO booklet, "General Information Concerning Patents" (specifically, the section entitled "Treaties and Foreign Patents") for more information on timeframes and deadlines for filing foreign patent applications. The guide is available either by contacting the USPTO Contact Center at 800-786-9199, or it can be viewed on the USPTO website at http://www.uspto.gov/web/offices/pac/doc/general/index.html.

For information on preventing theft of your intellectual property (patents, trademarks and copyrights), you may wish to consult the U.S. Government website, http://www.stopfakes.gov. Part of a Department of Commerce initiative, this website includes self-help "toolkits" giving innovators guidance on how to protect intellectual property in specific countries such as China, Korea and Mexico. For questions regarding patent enforcement issues, applicants may call the U.S. Government hotline at 1-866-999-HALT (1-866-999-4158).

LICENSE FOR FOREIGN FILING UNDER

Title 35, United States Code, Section 184

Title 37, Code of Federal Regulations, 5.11 & 5.15

GRANTED

The applicant has been granted a license under 35 U.S.C. 184, if the phrase "IF REQUIRED, FOREIGN FILING LICENSE GRANTED" followed by a date appears on this form. Such licenses are issued in all applications where

the conditions for issuance of a license have been met, regardless of whether or not a license may be required as set forth in 37 CFR 5.15. The scope and limitations of this license are set forth in 37 CFR 5.15(a) unless an earlier license has been issued under 37 CFR 5.15(b). The license is subject to revocation upon written notification. The date indicated is the effective date of the license, unless an earlier license of similar scope has been granted under 37 CFR 5.13 or 5.14.

This license is to be retained by the licensee and may be used at any time on or after the effective date thereof unless it is revoked. This license is automatically transferred to any related applications(s) filed under 37 CFR 1.53(d). This license is not retroactive.

The grant of a license does not in any way lessen the responsibility of a licensee for the security of the subject matter as imposed by any Government contract or the provisions of existing laws relating to espionage and the national security or the export of technical data. Licensees should apprise themselves of current regulations especially with respect to certain countries, of other agencies, particularly the Office of Defense Trade Controls, Department of State (with respect to Arms, Munitions and Implements of War (22 CFR 121-128)); the Bureau of Industry and Security, Department of Commerce (15 CFR parts 730-774); the Office of Foreign AssetsControl, Department of Treasury (31 CFR Parts 500+) and the Department of Energy.

NOT GRANTED

No license under 35 U.S.C. 184 has been granted at this time, if the phrase "IF REQUIRED, FOREIGN FILING LICENSE GRANTED" DOES NOT appear on this form. Applicant may still petition for a license under 37 CFR 5.12, if a license is desired before the expiration of 6 months from the filing date of the application. If 6 months has lapsed from the filing date of this application and the licensee has not received any indication of a secrecy order under 35 U.S.C. 181, the licensee may foreign file the application pursuant to 37 CFR 5.15(b).

UNITED STATES PATENT AND TRADEMARK OFFICE

COMMISSIONER FOR PATENTS
UNITED STATES PATENT AND TRADEMARK OFFICE
P.O. BOX 1450
ALEXANDRIA, VA 22313-1450
www.uspto.gov

JUN -1 2005

In re Application of	:	
Gad Shelef	:	
Serial No. 10/898,595	:	DECISION ON PETITION
Filed: July 22, 2004	:	TO MAKE SPECIAL
For: KINEMATIC MOUNTING SYSTEM	:	

Applicant's petition, filed October 28, 2004, seeks to have this application made special pursuant to the Accelerated Examination Program. The petition is GRANTED.

The petition has been reviewed and is found to be in compliance with the requirements for special status as set forth in Section 708.02(VIII) of the Manual of Patent Examining Procedures (MPEP).

Applicant is advised that the examiner's search will be restricted to the subject matter encompassed by the claims. In the event that the application receives a first action rejection, applicant is encouraged to arrange for an interview with the examiner, and to provide the examiner with a working copy of any proposed amendment one working day prior to the interview. Any amendment filed in response to a first action rejection which would require broadening of the field of search will be treated as an improper response.

PETITION GRANTED.

Richard A. Bertsch, Director
Technology Center 3700

Dion M. Bregman
Morgan Lewis & Bockius, LLP
3000 El Camino Real, Suite 700
Palo Alto, CA 94306

UNITED STATES PATENT AND TRADEMARK OFFICE

Commissioner for Patents
United States Patent and Trademark Office
P.O. Box 1450
Alexandria, VA 22313-1450
www.uspto.gov

JOHN T. WINBURN
100 BOSCH BOULEVARD
NEW BERN NC 28562

COPY MAILED

JUN 21 2006

OFFICE OF PETITIONS

In re Application of	:	
Hans LAPPAT et al.	:	DECISION ON PETITIONS
Application No. 10/898,599	:	UNDER 37 CFR 1.183 AND
Filed: July 23, 2004	:	UNDER 37 CFR 1.78(a)(3)
Attorney Docket No. 2002P00073WOUS	:	

This is a decision on the petition under 37 CFR 1.183, filed March 20, 2006, requesting waiver of 37 CFR 1.78(a)(3) as that rule operates in conjunction with 37 CFR 1.17(t), and a decision on the petition under 37 CFR 1.78(a)(3), filed April 28, 2006, to accept an unintentionally delayed claim under 35 U.S.C. § 120 and 365(c) for the benefit of priority to prior-filed PCT Application No. PCT/EP03/00511, filed January 20, 2003, set forth in the accompanying Application Data Sheet.

The petition under 37 CFR 1.183 is **DISMISSED** as moot in view of the request filed April 28, 2006, withdrawing the petition to waive the surcharge fee requirement of 37 CFR 1.78(a)(3). No fee has been assessed to petitioner's deposit account for the petition under 37 CFR 1.183.

The petition under 37 CFR 1.78(a)(3) is **GRANTED.**

A petition for acceptance of a claim for late priority under 37 CFR 1.78(a)(3) is only applicable to those applications filed on or after November 29, 2000. Further, the petition is appropriate only after the expiration of the period specified in 37 CFR 1.78(a)(2)(ii). In addition, the petition under 37 CFR 1.78(a)(3) must be accompanied by:

(1) the reference required by 35 U.S.C. § 120 and 37 CFR 1.78(a)(2)(i) of the prior-filed application, unless previously submitted;
(2) the surcharge set forth in § 1.17(t); and
(3) a statement that the entire delay between the date the claim was due under 37 CFR 1.78(a)(2)(ii) and the date the claim was filed was unintentional. The Commissioner may require additional information where there is a question whether the delay was unintentional.

All the above requirements having been satisfied, the late claim for priority under 35 U.S.C. § 120 and 365(c) is accepted as being unintentionally delayed.

The granting of the petition to accept the delayed benefit claim to the prior-filed application under 37 CFR 1.78(a)(3) should not be construed as meaning that the application is entitled to the benefit of the prior-filed application. In order for the application to be entitled to the benefit of the prior-filed application, all other requirements under 35 U.S.C. §§ 120 and 365(c) and 37 CFR 1.78(a)(1) and (a)(2) must be met. Similarly, the fact that the corrected Filing Receipt accompanying this decision on petition includes the prior-filed application should not be construed as meaning that applicant is entitled to the claim for benefit of priority to the prior-filed application noted thereon. Accordingly, the examiner will, in due course, consider this benefit claim and determine whether the application is entitled to the benefit of the earlier filing date.

A corrected Filing Receipt, which includes the priority claim to the prior-filed application, accompanies this decision on petition.

Any inquiries concerning this decision may be directed to David Bucci at (571) 272-7099. All other inquiries concerning either the examination procedures or status of the application should be directed to the Technology Center.

This application is being forwarded to the examiner of Technology Center Art Unit 3749 for appropriate action on the amendment filed April 28, 2006, including consideration of applicant's entitlement to claim benefit of priority under 35 U.S.C. § 120 and 365(c) to the above-noted, prior-filed PCT application.

Brian Hearn
Petitions Examiner
Office of Petitions

ATTACHMENT: Corrected Filing Receipt

UNITED STATES PATENT AND TRADEMARK OFFICE

UNITED STATES DEPARTMENT OF COMMERCE
United States Patent and Trademark Office
Address: COMMISSIONER FOR PATENTS
P.O. Box 1450
Alexandria, Virginia 22313-1450
www.uspto.gov

APPL NO.	FILING OR 371 (c) DATE	ART UNIT	FIL FEE REC'D	ATTY.DOCKET NO	DRAWINGS	TOT CLMS	IND CLMS
10/898,599	07/23/2004	3749	900	2002P00073WOUS	2	15	1

CONFIRMATION NO. 3942

CORRECTED FILING RECEIPT

OC000000019347268

46726
JOHN T. WINBURN
100 BOSCH BOULEVARD
NEW BERN, NC 28562

Date Mailed: 06/20/2006

Receipt is acknowledged of this regular Patent Application. It will be considered in its order and you will be notified as to the results of the examination. Be sure to provide the U.S. APPLICATION NUMBER, FILING DATE, NAME OF APPLICANT, and TITLE OF INVENTION when inquiring about this application. Fees transmitted by check or draft are subject to collection. Please verify the accuracy of the data presented on this receipt. **If an error is noted on this Filing Receipt, please mail to the Commissioner for Patents P.O. Box 1450 Alexandria Va 22313-1450. Please provide a copy of this Filing Receipt with the changes noted thereon. If you received a "Notice to File Missing Parts" for this application, please submit any corrections to this Filing Receipt with your reply to the Notice. When the USPTO processes the reply to the Notice, the USPTO will generate another Filing Receipt incorporating the requested corrections (if appropriate).**

Applicant(s)

Hans Lappat, Garching/Alz, GERMANY;
Helmut Uglorz, Steinheim, GERMANY;
Michael Ulmer, Traunreut, GERMANY;
Uwe Has, Unterneukirchen-Oberschroffen, GERMANY;

Assignment For Published Patent Application

BSH Bosch und Siemens Hausgerate GmbH, Munich, GERMANY

Power of Attorney: The patent practitioners associated with Customer Number **000046726**.

Domestic Priority data as claimed by applicant

This application is a CON of PCT/EP03/00511 01/20/2003

Foreign Applications

GERMANY DE 102 02 492.8 01/23/2002
If Required, Foreign Filing License Granted: 09/17/2004

The country code and number of your priority application, to be used for filing abroad under the Paris Convention, is US10/898,599

Projected Publication Date: Not Applicable

Non-Publication Request: No

Early Publication Request: No

Title

Baking oven

Preliminary Class

126

PROTECTING YOUR INVENTION OUTSIDE THE UNITED STATES

Since the rights granted by a U.S. patent extend only throughout the territory of the United States and have no effect in a foreign country, an inventor who wishes patent protection in another country must apply for a patent in a specific country or in regional patent offices. Applicants may wish to consider the filing of an international application under the Patent Cooperation Treaty (PCT). An international (PCT) application generally has the same effect as a regular national patent application in each PCT-member country. The PCT process **simplifies** the filing of patent applications on the same invention in member countries, but **does not result** in a grant of "an international patent" and does not eliminate the need of applicants to file additional documents and fees in countries where patent protection is desired.

Almost every country has its own patent law, and a person desiring a patent in a particular country must make an application for patent in that country in accordance with its particular laws. Since the laws of many countries differ in various respects from the patent law of the United States, applicants are advised to seek guidance from specific foreign countries to ensure that patent rights are not lost prematurely.

Applicants also are advised that in the case of inventions made in the United States, the Director of the USPTO must issue a license before applicants can apply for a patent in a foreign country. The filing of a U.S. patent application serves as a request for a foreign filing license. The application's filing receipt contains further information and guidance as to the status of applicant's license for foreign filing.

Applicants may wish to consult the USPTO booklet, "General Information Concerning Patents" (specifically, the section entitled "Treaties and Foreign Patents") for more information on timeframes and deadlines for filing foreign patent applications. The guide is available either by contacting the USPTO Contact Center at 800-786-9199, or it can be viewed on the USPTO website at http://www.uspto.gov/web/offices/pac/doc/general/index.html.

For information on preventing theft of your intellectual property (patents, trademarks and copyrights), you may wish to consult the U.S. Government website, http://www.stopfakes.gov. Part of a Department of Commerce initiative, this website includes self-help "toolkits" giving innovators guidance on how to protect intellectual property in specific countries such as China, Korea and Mexico. For questions regarding patent enforcement issues, applicants may call the U.S. Government hotline at 1-866-999-HALT (1-866-999-4158).

LICENSE FOR FOREIGN FILING UNDER
Title 35, United States Code, Section 184
Title 37, Code of Federal Regulations, 5.11 & 5.15

GRANTED

The applicant has been granted a license under 35 U.S.C. 184, if the phrase "IF REQUIRED, FOREIGN FILING LICENSE GRANTED" followed by a date appears on this form. Such licenses are issued in all applications where the conditions for issuance of a license have been met, regardless of whether or not a license may be required as set forth in 37 CFR 5.15. The scope and limitations of this license are set forth in 37 CFR 5.15(a) unless an earlier license has been issued under 37 CFR 5.15(b). The license is subject to revocation upon written notification. The date indicated is the effective date of the license, unless an earlier license of similar scope has been granted

under 37 CFR 5.13 or 5.14.

This license is to be retained by the licensee and may be used at any time on or after the effective date thereof unless it is revoked. This license is automatically transferred to any related applications(s) filed under 37 CFR 1.53(d). This license is not retroactive.

The grant of a license does not in any way lessen the responsibility of a licensee for the security of the subject matter as imposed by any Government contract or the provisions of existing laws relating to espionage and the national security or the export of technical data. Licensees should apprise themselves of current regulations especially with respect to certain countries, of other agencies, particularly the Office of Defense Trade Controls, Department of State (with respect to Arms, Munitions and Implements of War (22 CFR 121-128)); the Bureau of Industry and Security, Department of Commerce (15 CFR parts 730-774); the Office of Foreign Assets Control, Department of Treasury (31 CFR Parts 500+) and the Department of Energy.

NOT GRANTED

No license under 35 U.S.C. 184 has been granted at this time, if the phrase "IF REQUIRED, FOREIGN FILING LICENSE GRANTED" DOES NOT appear on this form. Applicant may still petition for a license under 37 CFR 5.12, if a license is desired before the expiration of 6 months from the filing date of the application. If 6 months has lapsed from the filing date of this application and the licensee has not received any indication of a secrecy order under 35 U.S.C. 181, the licensee may foreign file the application pursuant to 37 CFR 5.15(b).

UNITED STATES PATENT AND TRADEMARK OFFICE

UNITED STATES DEPARTMENT OF COMMERCE
United States Patent and Trademark Office
Address: COMMISSIONER FOR PATENTS
P.O. Box 1450
Alexandria, Virginia 22313-1450
www.uspto.gov

APPLICATION NO.	FILING DATE	FIRST NAMED INVENTOR	ATTORNEY DOCKET NO.	CONFIRMATION NO.
10/898,611	07/23/2004	David L. Bombard	159	3955

7590 10/24/2007

CARDICA, INC.
900 SAGINAW DRIVE
REDWOOD CITY, CA 94063

EXAMINER
THALER, MICHAEL H

ART UNIT	PAPER NUMBER
3731	

MAIL DATE	DELIVERY MODE
10/24/2007	PAPER

DECISION DISMISSING PETITION UNDER 37 CFR 1.138(d)

The declaration of express abandonment will not be recognized

This is in response to the petition under 37 CFR 1.138(d), requesting for a refund of any previously paid search fee and excess claims fee in the above-identified application.

The petition is dismissed.

The express abandonment will **not** be recognized for the reason(s) indicated below:

1. ☐ The petition was not filed in sufficient time to permit the appropriate officials to recognize the abandonment before an examination has been made of the application. See 37 CFR 1.138(d).

2. ☐ The petition was not signed by a party authorized by 37 CFR 1.33(b)(1), (3) or (4).

3. ☐ The application is not an application filed under 35 U.S.C. 111(a) on or after December 8, 2004.

4. ☒ The petition for express abandonment under 1.138(d) is dismissed because the applicant did not pay any search fee and excess claims fees in the above-identified application.

Telephone inquiries should be directed to the Office of Data Management at (571) 272-4200.

Tammy J. Kamith

Patent Publication Branch
Office of Data Management

FORM PET651D (Rev. 08/07)

UNITED STATES PATENT AND TRADEMARK OFFICE

Commissioner for Patents
United States Patent and Trademark Office
P.O. Box 1450
Alexandria, VA 22313-1450
www.uspto.gov

Paper No.

FISH & RICHARDSON P.C.
P.O. Box 1022
MINNEAPOLIS MN 55440-1022

MAILED

JUN 0 9 2009

OFFICE OF PETITIONS

In re Patent No. 7,444,930	:	
Jonathan Brandt	:	DECISION DISMISSING
Application No. 10/898613	:	REQUEST FOR
Issue Date: October 21, 2008	:	RECONSIDERATION OF
Filed: July 22, 2004	:	PATENT TERM ADJUSTMENT
Attorney Docket No.	:	UNDER 37 CFR 1.705(d)
07844-659001	:	

This is a decision on the "APPLICATION FOR PATENT TERM ADJUSTMENT UNDER 37 CFR §1.705(d)," filed November 24, 2008, requesting that the patent term adjustment determination for the above-identified patent be changed from four hundred forty-four (444) days to seven hundred ninety-five (795) days.

The request for reconsideration patent term adjustment is **DISMISSED**.

On October 21, 2008, the above-identified application matured into U.S. Patent No. 7,444,930 with a patent term adjustment of 444 days. This request for reconsideration of patent term adjustment was timely filed within two months of the issue date of the patent. See 37 CFR 1.705(d).

Patentees request recalculation of the patent term adjustment based on the decision in Wyeth v. Dudas, 580 F. Supp. 2d 138, 88 U.S.P.Q. 2d 1538 (D.D.C. 2008). Patentees assert that pursuant to Wyeth, a PTO delay under §154(b)(1)(A) overlaps with a delay under §154(b)(1)(B) only if the delays "occur on the same day." Patentees maintain that the period of adjustment due to the Three Year Delay by the Office, pursuant to 37 CFR § 1.703(b)(the "B" Delay), of 457 days and the period of adjustment due to examination delay, pursuant to 37 CFR

§1.702(a)(the "A" Delay), of 351 days do not overlap as these periods do not occur on the same day.

The 457-day period is calculated based on the application having been filed under 35 U.S.C. 111(a) on July 22, 2004, and the patent having been issued on October 21, 2008, three years and 457 days later. Patentees assert that in addition to this 457-day period, they are entitled to a period of adjustment due to examination delay pursuant to 37 CFR 1.702(a) totalling 351 days. This 351-day period is the period of delay for the failure by the Office to mail at least one of a notification under 35 U.S.C. 132 not later than fourteen months after the date on which application was filed under 35 U.S.C. 111(a), pursuant to 37 CFR 1.702(a)(1). A non-final Office action was mailed on September 8, 2006, 14 months and 351 days after the application was filed on July 22, 2004.

Under 37 CFR 1.703(f), patentees are entitled to a period of patent term adjustment equal to the period of delays based on the grounds set forth in 37 CFR 1.702 reduced by the period of time equal to the period of time during which patentees failed to engage in reasonable efforts to conclude prosecution pursuant to 37 CFR 1.704. In other words, patentees are entitled to the period of Office delay reduced by the period of applicant delay. Patentees do not dispute the period of reduction of 13 days for applicant delay.

Patentees do not dispute that the total period of Office delay is the sum of the period of Three Years Delay (457 days) and the period of Examination Delay (351 days) to the extent that these periods of delay are not overlapping. However, in effect, patentees contend that no portion of the Three Year Delay period overlaps with the period of examination delay. Accordingly, patentees submit that the total period of adjustment for Office delay is 808 days, which is the sum of the period of Three Year Delay (457 days) and the period of Examination Delay (351 days), reduced by the period of overlap (0 days). As such, patentees assert entitlement to a patent term adjustment of 795 days (457 + 351 reduced by 0 overlap - 13 (applicant delay)).
The Office agrees that as of the issuance of the patent on October 21 2008, the application was pending three years and 457 days after its filing date. The Office agrees that the action detailed above was not taken within the specified time frame, and thus, the entry of a period of adjustment of 351 days is correct. At issue is whether patentees should accrue 457 days

of patent term adjustment for the Office taking in excess of three years to issue the patent, as well as 351 days for Office failure to take a certain action within a specified time frame (or examination delay).

The Office contends that 351 days overlap. Patentees' calculation of the period of overlap is inconsistent with the Office's interpretation of this provision. 35 U.S.C. 154(b)(2)(A) limits the adjustment of patent term, as follows:

> to the extent that the periods of delay attributable to grounds specified in paragraph (1) overlap, the period of any adjustment granted under this subsection shall not exceed the actual number of days the issuance of the patent was delayed.

Likewise, 35 CFR 1.703(f) provides that:

> To the extent that periods of delay attributable to the grounds specified in § 1.702 overlap, the period of adjustment granted under this section shall not exceed the actual number of days the issuance of the patent was delayed.

As explained in *Explanation of 37 CFR 1.703(f) and of the United States Patent and Trademark Office Interpretation of 35 U.S.C. 154(b)(2)(A)*, 69 Fed. Reg. 34283 (June 21, 2004), the Office interprets 35 U.S.C. 154(b)(2)(A) as permitting either patent term adjustment under 35 U.S.C. 154(b)(1)(A)(i)-(iv), or patent term adjustment under 35 U.S.C. 154(b)(1)(B), but not as permitting patent term adjustment under both 35 U.S.C. 154(b)(1)(A)(i)-(iv) and 154(b)(1)(B). Accordingly, the Office implements the overlap provision as follows:

> If an application is entitled to an adjustment under 35 U.S.C. 154(b)(1)(B), the entire period during which the application was pending (except for periods excluded under 35 U.S.C. 154(b)(1)(B)(i)-(iii)), and not just the period beginning three years after the actual filing date of the application, is the period of delay under 35 U.S.C. 154(b)(1)(B) in determining whether periods of delay overlap under 35 U.S.C. 154(b)(2)(A). Thus, any days of delay for Office issuance of the patent more than 3 years after the filing date of the application, which overlap with the days of patent term adjustment accorded prior to

> the issuance of the patent will not result in any additional patent term adjustment. See 35 U.S.C. 154(b)(1)(B), 35 U.S.C. 154(b)(2)(A), and 37 CFR § 1.703(f). See *Changes to Implement Patent Term Adjustment Under Twenty Year Term; Final Rule*, 65 Fed. Reg. 56366 (Sept. 18, 2000). See also *Revision of Patent Term Extension and Patent Term Adjustment Provisions; Final Rule*, 69 Fed. Reg. 21704 (April 22, 2004), 1282 Off. Gaz. Pat. Office 100 (May 18, 2004). See also *Explanation of 37 CFR 1.703(f) and of the United States Patent and Trademark Office Interpretation of 35 U.S.C. 154(b)(2)(A)*, 69 Fed. Reg. 34283 (June 21, 2004).

The current wording of § 1.703(f) was revised in response to the misinterpretation of this provision by a number of Patentees. The rule was slightly revised to more closely track the corresponding language of 35 U.S.C. 154(b)(2)(A). The relevant portion differs only to the extent that the statute refers back to provisions of the statute whereas the rule refers back to sections of the rule. This was not a substantive change to the rule nor did it reflect a change of the Office's interpretation of 35 U.S.C. 154(b)(2)(A). As stated in the *Explanation of 37 CFR 1.703(f) and of the United States Patent and Trademark Office Interpretation of 35 U.S.C. 154(b)(2)(A)*, the Office has consistently taken the position that if an application is entitled to an adjustment under the three-year pendency provision of 35 U.S.C. 154(b)(1)(B), the entire period during which the application was pending before the Office (except for periods excluded under 35 U.S.C. 154(b)(1)(B)(i)-(iii)), and not just the period beginning three years after the actual filing date of the application, is the relevant period under 35 U.S.C. 154(b)(1)(B) in determining whether periods of delay "overlap" under 35 U.S.C. 154(b)(2)(A).

This interpretation is consistent with the statute. Taken together the statute and rule provide that to the extent that periods of delay attributable to grounds specified in 35 U.S.C. 154(b)(1) and in corresponding § 1.702 overlap, the period of adjustment granted shall not exceed the actual number of days the issuance of the patent was delayed. The grounds specified in these sections cover the A) guarantee of prompt Patent and Trademark Office responses, B) guarantee of no more than 3-year application pendency, and C) guarantee or adjustments for delays due to interference, secrecy orders and appeals. A section by

section analysis of 35 U.S.C. 154(b)(2)(A) specifically provides that:

> Section 4402 imposes limitations on restoration of term. In general, pursuant to [35 U.S.C.] 154(b)(2)(A)-(C), total adjustments granted for restorations under [35 U.S.C. 154](b)(1) are reduced as follows: (1) To the extent that there are multiple grounds for extending the term of a patent that may exist simultaneously (e.g., delay due to a secrecy order under [35 U.S.C.] 181 and administrative delay under [35 U.S.C.] 154(b)(1)(A)), the term should not be extended for each ground of delay but only for the actual number of days that the issuance of a patent was delayed; See 145 Cong. Rec. S14,718[1]

As such, the period for over three-year pendency does not overlap only to the extent that the actual dates in the period beginning three years after the date on which the application was filed overlap with the actual dates in the periods for failure of the Office to take action within specified time frames. In other words, consideration of the overlap does not begin three years after the filing date of the application.

In this instance, the relevant period under 35 U.S.C. 154(b)(1)(B) in determining whether periods of delay "overlap" under 35 U.S.C. 154(b)(2)(A) is the entire period during which the application was pending before the Office, July 22, 2004, to the date the patent issued on October 21, 2008. Prior to the issuance of the patent, 351 days of patent term adjustment were accorded for the Office failing to respond within a specified time frame during the pendency of the application. 457 days is determined to be the actual number of days that the issuance of the patent was delayed, considering the 351 for the Office failing to respond within a specified time frame during the pendency of the application.

Accordingly, at issuance, the Office properly entered 106 additional days of patent term adjustment for the Office taking in excess of three years to issue the patent, for a total Office delay of 457 days.

---

[1] The AIPA is title IV of the Intellectual Property and Communications Omnibus Reform Act of 1999 (S. 1948), which was incorporated and enacted as law as part of Pub. L. 106-113. The Conference Report for H.R. 3194, 106th Cong. 1st Sess. (1999), which resulted in Pub. L. 106-113, does not contain any discussion (other than the incorporated language) of S. 1948. A section-by-section analysis of S. 1948, however, was printed in the Congressional Record at the request of Senator Lott, See 145 Cong. Rec. S14,708-26 (1999)(daily ed. Nov. 17, 1999).

In view thereof, no adjustment to the patent term will be made.

The Office acknowledges submission of the $200.00 fee set forth in 37 CFR 1.18(e). No additional fees are required.

Telephone inquiries specific to this matter should be directed to Attorney Derek Woods, at (571) 272-3232.

Nancy Johnson
Senior Petitions Attorney
Office of Petitions
Office of the Deputy Commissioner
for Patent Examination Policy

UNITED STATES PATENT AND TRADEMARK OFFICE

Commissioner for Patents
United States Patent and Trademark Office
P.O. Box 1450
Alexandria, VA 22313-1450
www.uspto.gov

Gary M. Nath
Nath & Associates, PLLC
1030 15th Street, NW
6th Floor
Washington, DC 20005

COPY MAILED

SEP 10 2004

OFFICE OF PETITIONS

In re Application of	:	
Hannoch Ron	:	
Application No. 10/898,619	:	NOTICE
Filed: July 26, 2004	:	
Attorney Docket No. 26261	:	

This is a notice regarding your request for acceptance of a fee deficiency submission under 37 CFR 1.28. On September 1, 1998, the Court of Appeals for the Federal Circuit held that 37 CFR 1.28(c) is the sole provision governing the time for correction of the erroneous payment of the issue fee as a small entity. **See DH Technology v. Synergystex International, Inc. 154 F.3d 1333, 47 USPQ2d 1865 (Fed. Cir. Sept. 1, 1998).**

The Office no longer investigates or rejects original or reissue applications under 37 CFR 1.56. **1098 Off. Gaz. Pat. Office 502 (January 3, 1989)**. Therefore, nothing in this Notice is intended to imply that an investigation was done.

Your fee deficiency submission under 37 CFR 1.28 is hereby **ACCEPTED**.

This file is being referred to back to the Office of Initial Patent Examination.

Inquiries related to this communication should be directed to the undersigned at (703) 308-6711.

Andrea Smith
Petitions Examiner
Office of Petitions
Office of the Deputy Commissioner
for Patent Examination Policy

UNITED STATES PATENT AND TRADEMARK OFFICE

Commissioner for Patents
United States Patent and Trademark Office
P.O. Box 1450
Alexandria, VA 22313-1450
www.uspto.gov

AKERMAN SENTERFITT
P.O. BOX 3188
WEST PALM BEACH, FL 33402-3188

COPY MAILED

JUN 1 0 2008

OFFICE OF PETITIONS

In re Application of
Yury Pustovalov, et al.
Application No. 10/898,631
Filed: July 23, 2004
Attorney Docket No. 8326-5

DECISION ON PETITION
TO WITHDRAW
FROM RECORD

This is a decision on the Request to Withdraw as attorney or agent under 37 C.F.R. § 1.36(b) or 37 C.F.R. § 10.40 filed November 15, 2007.

The request is **APPROVED**.

A review of the file record indicates that Neil R. Jetter: (1) does not have power of attorney in this patent application; and (2) has been employed or otherwise engaged in the proceedings in this patent application. In view of the present decision, Neil R. Jetter has been withdrawn from the present application and may not prepare or submit papers under 37 C.F.R. § 1.34, or correspond in any manner in this application unless appointed in an acceptable power of attorney under 37 C.F.R. § 1.32(b).

The request to change the correspondence of record is not acceptable as the requested correspondence address is not that of: (1) the first named signing inventor; or (2) the intervening assignee of the entire interest. All future communications from the Office will be directed to the first named signing inventor at the first copied address below until otherwise properly notified by the applicant.

In order to request or take action in a patent matter, the assignee must establish its ownership of the patent to the satisfaction of the Director. In this regard, a Statement under 37 CFR 3.73(b) must have either: (i) documentary evidence of a chain of title from the original owner to the assignee (*e.g.*, copy of an executed assignment), and a statement affirming that the documentary evidence of the chain of title from the original owner to the assignee was or concurrently is being submitted for recordation pursuant to § 3.11; or (ii) a statement specifying where documentary evidence of a chain of title from the original owner to the assignee is recorded in the assignment records of the Office (*e.g.*, reel and frame number). The power of attorney filed on May 5, 2006 does not include one of the above two options.

Applicant is reminded that there is no attorney of record at this time.

There are no pending Office actions at the present time.

Telephone inquires concerning this decision should be directed to undersigned at 571-272-1642.

April M. Wise
Petitions Examiner
Office of Petitions

cc: YURY PUSTOVALOV
201, METALURGIV AVE
#31
MARIUPOL 87524 UKRAINE

cc: ENERIZE CORPORATION
C/O ELENA SHEMBEL
4956 ROTHCHILD DRIVE
CORAL SPRINGS, FL 33067-4134

UNITED STATES PATENT AND TRADEMARK OFFICE

UNITED STATES DEPARTMENT OF COMMERCE
United States Patent and Trademark Office
Address: COMMISSIONER FOR PATENTS
P.O. Box 1450
Alexandria, Virginia 22313-1450
www.uspto.gov

APPLICATION NUMBER	FILING OR 371(C) DATE	FIRST NAMED APPLICANT	ATTY. DOCKET NO./TITLE
10/898,631	07/23/2004	Yury Pustovalov	8326-5

CONFIRMATION NO. 3629

POWER OF ATTORNEY NOTICE

30448
AKERMAN SENTERFITT
P.O. BOX 3188
WEST PALM BEACH, FL 33402-3188

OC000000030314957

Date Mailed: 06/05/2008

NOTICE REGARDING CHANGE OF POWER OF ATTORNEY

This is in response to the Power of Attorney filed 11/15/2007.

- The withdrawal as attorney in this application has been accepted. Future correspondence will be mailed to the new address of record. 37 CFR 1.33.

/amwise/

Office of Data Management, Application Assistance Unit (571) 272-4000, or (571) 272-4200, or 1-888-786-0101

UNITED STATES PATENT AND TRADEMARK OFFICE

Commissioner for Patents
United States Patent and Trademark Office
P.O. Box 1450
Alexandria, VA 22313-1450
www.uspto.gov

GREENBLUM & BERNSTEIN, P.L.C.
1950 ROLAND CLARKE PLACE
RESTON VA 20191

9/5/08

In re Application of:
HERMAN, JEFFREY et al.
Serial No.: 10/898,637
Filed: Jul. 23, 2004
Docket: VOI0228.CIP
Title: METHOD AND AN APPARATUS FOR MANUFACTURING A THREE-DIMENSIONAL SURFACE STRUCTURE WEB

DECISION ON PETITION TO WITHDRAW DRAWING OBJECTION

This is a decision on the petition filed on Aug. 21, 2008 seeking reversal of the drawing objection under 37 CFR 1.83(a). The petition is being considered pursuant to 37 CFR 1.181. No fee is required.

The petition is **DISMISSED AS UNTIMELY**.

In the petition, the petitioner requests a review of the examiner's objection to the drawings under 37 CFR 1.83(a). The examiner objected to the drawing on the grounds that "dewatering includes using a SPECTRA membrane attached to an air distribution layer, said SPECTRA membrane being used with a conventional woven fabric, said woven fabric arranged between said SPECTRA membrane and a through flow cylinder, said SPECTRA membrane is laminated to said air distribution layer, said anti-rewetting layer is used without an additional fabric, the step of guiding the fiber web with said imprinting fabric between at least two membranes through said pressure space, said at least two membranes including at least one of an air distribution membrane and an anti-rewetting membrane, each of said at least two membranes have a thickness of approximately 1 mm to 3 mm and counter device" must be shown or the feature(s) canceled from the claim(s). These claimed features are present in claims 46-70 and were not illustrated. Petitioner believes that the objection to the drawings is in error and requests review and relief therefrom.

The record shows that:

1) In a Non-Final Rejection on May 30, 2007, Examiner rejected claims 1-35, 40, 41, 46-70 are rejected under 35 U.S.C. 112, first paragraph, as failing to comply with the enablement requirement. The claim(s) contains subject matter which was not described in the specification in such a way as to enable one skilled in the art to which it pertains, or

with which it is most nearly connected, to make and/or use the invention. In the non-final Office action of May 30, 2007, the examiner also objected to the drawings drawing on the grounds that the drawings must show every feature of the invention specified in the claims because the same claimed features as rejected under 112, first paragraph.
2) Applicants responded on Oct. 30, 2007 stating that claimed features are not necessary to be illustrated by the drawings because they are well known in the art as shown by GB 2 305 156 A and G 2 235 705 B that correspond to the claimed SPECTRA. The applicant also filed a replacement drawing sheets on Oct. 30, 2007. The examiner would not accept the replacement drawings Figs. 1 and 1A.because the examiner does not see the black box indicated by the applicant.
3) On Dec. 21, 2007. the examiner issued a Final Rejection, objecting to the drawing on the same grounds again. The examiner would not accept the new replacement drawings sheets of Figs 1 and 1A because the examiner does not see the black box indicated by the applicant.
4) On Mar. 31, 2008 and May 31, 2008, the applicant filed a Notice of Appeal and an Appeal Brief to the final rejection.
5) On Jun. 23, 200, the applicant filed a Request for Reconsideration to withdraw the drawing objection. Subsequently, on Jul. 18, 2008, the examiner promulgated an Advisory Action and maintained the drawing objection.
6) On Aug. 21, 2008, the current petition seeking withdrawal of the drawing objection under 37 CFR § 1.83(a)[1] was filed.

Discussion and Analysis

A review of the record shows that the instant petition of Aug. 21, 2008 was filed eight months after the mailing date of the final rejection of Dec. 21, 2007. Pursuant to 37 CFR 1.181(f)[2], the petition must be filed within two months from the action complained of. Since the petition was not timely filed, the requested withdrawal of objection to the drawings in the final Office action of Dec. 21, 2007 will not be granted.

A further review of the record shows that the examiner was in compliance with applicable examining practice as set forth in MPEP 608.02(d). Therefore, the drawings are not in compliance with 37 CFR 1.83(a). The examiner's final Office action dated Dec. 21, 2007 objecting to the drawings is correct.

In the petition, petitioner alleges that the proposed Figs. 1 and 1a satisfy the requirement of 37 CFR § 1.83(a) because the SPECTRA is identified as reference numeral 36'.

---

[1] § 1.83 Content of drawing. (a) The drawing in a nonprovisional application must show every feature of the invention specified in the claims. However, conventional features disclosed in the description and claims, where their detailed illustration is not essential for a proper understanding of the invention, should be illustrated in the drawing in the form of a graphical drawing symbol or a labeled representation (e.g., a labeled rectangular box). In addition, tables and sequence listings that are included in the specification are, except for applications filed under 35 U.S.C. 371, not permitted to be included in the drawings.

[2] 37 CFR 1.181(f): The mere filing of a petition will not stay any period for reply that may be running against the application, nor act as a stay of other proceedings. Any petition under this part not filed within two months of the mailing date of the action or notice from which relief is requested may be dismissed as untimely, except as otherwise provided. This two-month period is not extendable.

Petitioner also opines that those ordinarily skilled in the art would readily understand the uses of a SPECTRA membrane. Petitioner also argues that Figure 3 do disclose imprinting fabric 14 can be a SPECTRA membrane and Figure 5 do disclose membrane 36 can be a SPECTRA membrane. Figure 4 also discloses membrane 36 can be a SPECTRA membrane. Petitioner further argues that there is no requirement that each recited element have a reference numeral. Therefore, when the drawings read in light of the specification, they do adequately show the SPECTRA membrane for the understanding of the ordinarily skilled artisan. It is also the petitioner's position that it is not necessary for the drawings to show in detail that which is known in the art. In the petition, petitioner acknowledges that the SPECTRA membrane *per se* is not the invention. To support such a position, petitioner cited two prior art patents, GB 2 305 156 A and G 2 235 705 B that correspond to the claimed SPECTRA membrane. As the SPECTRA membrane is known in the art, it is only necessary to depict this element as a "black box," in the Replacement Sheet filed on Oct. 30, 2007.

In order to determine whether or not the drawings show the limitations in question, namely "dewatering includes using a SPECTRA membrane attached to an air distribution layer, said SPECTRA membrane being used with a conventional woven fabric, said woven fabric arranged between said SPECTRA membrane and a through flow cylinder, said SPECTRA membrane is laminated to said air distribution layer, said anti-rewetting layer is used without an additional fabric, the step of guiding the fiber web with said imprinting fabric between at least two membranes through said pressure space, said at least two membranes including at least one of an air distribution membrane and an anti-rewetting membrane, each of said at least two membranes have a thickness of approximately 1 mm to 3 mm and counter device" as recited in claims 47-70, we must look to the originally filed drawings. The original drawings in fact do not illustrate such claimed features. In particular, the examiner disagreed with the applicant's explanation for the reasons set forth in the advisory action of Jul. 18, 2008. The examiner found that the disclosure and British patents are not persuasive. The original drawings fail to show "said dewatering includes using a SPECTRA membrane attached to an air distribution layer, said SPECTRA membrane being used with a conventional woven fabric, said woven fabric arranged between said SPECTRA membrane and a through flow cylinder, said SPECTRA membrane is laminated to said air distribution layer, said antirewetting layer is used without an additional fabric, the step of guiding the fiber web with said imprinting fabric between at least two membranes through said pressure space, said at least two membranes including at least one of an air distribution membrane and an anti-rewetting membrane, each of said at least two membranes have a thickness of approximately 1 mm to 3 mm and counter device". However, the drawing sheet of Fig. 1 and 1a still do not show the claimed features of claims 47-70. The examiner contends that there is no black box illustrated in the replacement drawings of Figs. 1 and 1a. A review of record clearly shows that the examiner's Office action was in compliance with applicable examining practice as set forth in MPEP 608.02(d). Therefore, the drawings are not in compliance with 37 CFR 1.83(a). The examiner's final Office action dated Dec. 21, 2007 objecting to the drawings is correct.

Conclusion

In view of the record, petitioner's request to withdraw the objection to the drawings for failure to illustrate the claimed subject matter in the drawings is dismissed as untimely. For the foregoing reasons, the relief requested by petitioner will not be granted. Specifically, the examiner's objection to the drawings in the final Office action dated Dec. 21, 2007 is proper.

The application is being forwarded to Supervisory Patent Examiner of Art Unit 3749 for further processing. Any request for reconsideration of this decision must be submitted within TWO (2) MONTHS from the mail date of this decision, 37 CFR 1.181(f). No extension of time under 37 CFR 1.136(a) is permitted. The reconsideration request should include a cover letter entitled "Renewed Petition under 37 CFR 1.181". Any inquiry regarding this decision should be directed to Henry Yuen, Special Programs Examiner, at (571) 272-4856.

PETITION DISMISSED AS UNTIMELY.

for

Karen M. Young, Director
Technology Center 3700

UNITED STATES PATENT AND TRADEMARK OFFICE

Commissioner for Patents
United States Patent and Trademark Office
P.O. Box 1450
Alexandria, VA 22313-1450
www.uspto.gov

Paper No.

NOTARO & MICHALOS P.C.
100 DUTCH HILL ROAD
SUITE 110
ORANGEBURG NY 10962-2100

COPY MAILED

APR 15 2009

OFFICE OF PETITIONS

In re Application of	:
Helleday et al.	:
Application No. 10/898,653	: LETTER REGARDING
Patent No. 7,351,701	: PATENT TERM ADJUSTMENT
Filed: July 23, 2004	:
Issue Date: April 1, 2008	:
Docket No. J660-046US	:

This is in response to the "LETTER," filed August 26, 2008. Pursuant to Patentees' duty of good faith and candor to the Office, Patentees request that the determination of patent term adjustment under 35 U.S.C. 154(b) be reviewed for accuracy.

The request for review of the patent term adjustment is **GRANTED**.

The Office has updated the PAIR screen to reflect that the correct Patent Term Adjustment (PTA) determination at the time of the mailing of the notice of allowance is **zero days**. A copy of the updated PAIR screen, showing the correct determination, is enclosed.

On January 8, 2008 and January 7, 2009, the Office mailed a Determination of Patent Term Adjustment under 35 U.S.C. 154(b) in the above-identified application. The Notices stated that the patent term adjustment is 62 days. On August 26, 2008, Patentees submitted the present comment. Patentees disclose

that they believe that the patent term adjustment indicated in the Determination of Patent Term Adjustment is incorrect and should be recalculated. Patentees state that it appears that the PTA Calculations in PAIR incorrectly fails to take into account the submission of a Request for Continued Examination (RCE) more than three months after the mailing of a final Office action.

The period of 168 days of Office delay is not in dispute.

The two periods of 60 and 46 days of Applicant delay are not in dispute.

A review of the application history reveals that Patentees are correct.

Pursuant to 37 C.F.R. § 1.704(b), the failure to reply to an Office action within three months is a failure to engage in reasonable efforts to conclude prosecution. A final Office action was mailed on March 9, 2007, and a RCE was not received until September 5, 2007, which is three months and 88 days after the mailing of the final Office action. As such, Patentees failed to engage in reasonable efforts to conclude prosecution of the application, and this delay totalled 88 days.

As such, the total period of Applicant delay consists of 194 days (60 + 46 + 88).

In view thereof, the correct patent term adjustment at the time of mailing of the notice of allowance is **zero days** (168 days of Office delay - 194 days of applicant delay).

As this letter was submitted to advise the Office of an error in Patentees' favor, the Office will not assess the $200.00 fee under 37 CFR 1.18(e). The Office thanks Patentees for their good faith and candor in bringing this to the attention of the Office.

The application file is being forwarded to the Certificates of Correction Branch for issuance of a certificate of correction in order to rectify this error. The Office will issue a certificate of correction indicating that the term of the above-identified patent is extended or adjusted by zero days.

Telephone inquiries specific to this matter should be directed to Senior Attorney Paul Shanoski (571) 272-3225.

Nancy Johnson
Senior Petitions Attorney
Office of Petitions
United States Patent and Trademark Office

Enclosure: Copy of DRAFT Certificate of Correction

c

UNITED STATES PATENT AND TRADEMARK OFFICE

DRAFT CERTIFICATE OF CORRECTION

PATENT : 7,351,701 B2

DATED : April 1, 2008

INVENTOR(S) : Helleday et al.

Draft

It is certified that error appears in the above-identified patent and that said Letters Patent is hereby corrected as shown below:

On the cover page,

[*] Notice: Subject to any disclaimer, the term of this patent is extended or adjusted under 35 USC 154(b) by (412) days

Delete the phrase "by 62" and insert – by 0 days--

UNITED STATES PATENT AND TRADEMARK OFFICE

Commissioner for Patents
United States Patent and Trademark Office
P.O. Box 1450
Alexandria, VA 22313-1450
www.uspto.gov

SIEMENS CORPORATION
INTELLECTUAL PROPERTY DEPARTMENT
170 WOOD AVENUE SOUTH
ISELIN NJ 08830

COPY MAILED

MAR 18 2008

OFFICE OF PETITIONS

In re Application of
Anming He Cai et al.
Application No. 10/898,658
Filed: July 23, 2004
Attorney Docket No.: **2004P08015US**

ON PETITION

This is a decision on the petition filed January 22, 2008 under 37 CFR 1.137(b),[1] to revive the above-identified application.

The petition is **GRANTED**.

This application became abandoned for failure to timely reply to the non-Final Office Action mailed April 18, 2007. A shortened statutory period of three months was set for replying to the non-Final Office Action. No extensions of time having been requested, this application became abandoned July 19, 2007. Accordingly, a Notice of Abandonment was mailed January 10, 2008.

This matter is being referred to Technology Center 2628 for appropriate action on the amendment filed January 22, 2008.

Telephone inquiries concerning this matter should be directed to the undersigned Petitions Attorney at (571) 272-3212.

Patricia Faison-Ball
Senior Petitions Attorney
Office of Petitions

---

[1]Effective December 1, 1997, the provisions of 37 CFR 1.137(b) now provide that where the delay in reply was unintentional, a petition may be filed to revive an abandoned application or a lapsed patent pursuant to 37 CFR 1.137(b). A grantable petition filed under the provisions of 37 CFR 1.137(b) must be accompanied by:

(1) the required reply, unless previously filed. In a nonprovisional application abandoned for failure to prosecute, the required reply may be met by the filing of a continuing application. In a nonprovisional application filed on or after June 8, 1995, and abandoned for failure to prosecute, the required reply may also be met by the filing of a request for continued examination in compliance with § 1.114. In an application or patent, abandoned or lapsed for failure to pay the issue fee or any portion thereof, the required reply must be the payment of the issue fee or any outstanding balance thereof. In an application abandoned for failure to pay the publication fee, the required reply must include payment of the publication fee.

(2) the petition fee as set forth in 37 CFR 1.17(m);

(3) a statement that the entire delay in filing the required reply from the due date for the reply until the filing of a grantable petition pursuant to 37 CFR 1.137(b) was unintentional. The Commissioner may required additional information where there is a question whether the delay was unintentional; and

(4) any terminal disclaimer (and fee as set forth in 37 CFR 1.20(d)) required pursuant to 37 CFR 1.137(c)).

SPE: J. Mc Neil

SPE RESPONSE FOR CERTIFICATE OF CORRECTION

Paper No.: _____

DATE : 6/11/07

TO SPE OF : ART UNIT 1775

SUBJECT : Request for Certificate of Correction for Appl. No.: 10/898,659 Patent No.: 7208222

Please respond to this request for a certificate of correction within 7 days.

Please review the requested changes/corrections as shown in the **COCIN** document(s) in the IFW application image. No new matter should be introduced, nor should the scope or meaning of the claims be changed.

Please complete the response (see below) and forward the completed response to scanning using document code **COCX**.

Lamonte M. Newsome
Certificates of Correction Branch
703-308-9390 ext. 112

Thank You For Your Assistance

The request for issuing the above-identified correction(s) is hereby:

Note your decision on the appropriate box.

- [x] **Approved** — All changes apply.
- [ ] **Approved in Part** — Specify below which changes do not apply.
- [ ] **Denied** — State the reasons for denial below.

Comments: _____

JENNIFER C. MCNEIL
SUPERVISORY PATENT EXAMINER
SPE

1775
Art Unit

UNITED STATES PATENT AND TRADEMARK OFFICE

COMMISSIONER FOR PATENTS
UNITED STATES PATENT AND TRADEMARK OFFICE
P.O. BOX 1450
ALEXANDRIA, VA 22313-1450
www.uspto.gov

Stephen H. Doctor
MCDONNELL BOEHNEN HULBET & BERGHOFF
300 South Wacker
Suite 3200
Chicago, IL 60606

In re Application of: SIRNA THERAPEUTICS, INC. PCT No.: PCT/US02/15876 International Filing Date: 17 May 2002 Priority Date: 18 May 2001 Attorney's Docket No.: 02-312-PCT;600.019 For: CONJUGATES AND COMPOSITIONS FOR CELLULAR DELIVERY	DECISION ON PETITION UNDER 37 CFR 1.10

This decision is issued in response to the "Petition To Accord Express Mail 'Date In' As Filing Date" filed 03 August 2004, treated herein under 37 CFR 1.10(c). The petition seeks to correct the international filing date to 17 May 2002. No petition fee is required.

BACKGROUND

Applicant initiated this international application by filing a Request (Form PCT/RO/101) and accompanying materials via "Express Mail" label number EL602855817US. The transmittal letter filed with the application materials lists this "Express Mail" label number, and identifies the date of deposit as 17 May 2002.

On 20 June 2002, the RO/US mailed a "Notification Of The International Application Number And Of The International Filing Date" (Form PCT/RO/105) identifying 20 May 2002 as the international filing date.

On 03 August 2004, applicant filed the petition considered herein. The petition seeks correction of the international filing date to 17 May 2002, the date on which applicant claims the application was deposited with the USPS. The submission includes, among other materials, a copy of the customer receipt for Express Mail label number EL602855817US, which bears a "date in" of 17 May 2002.

DISCUSSION

The present international application was accorded an international filing date of 20 May 2002. Applicant asserts that the proper international filing date is 17 May 2002, the date on which the Express Mail envelope containing the application materials was deposited with the USPS. As noted above, applicant has supplied a copy of the customer receipt for the Express

Mail envelope bearing a "date in" of 17 May 2002, and the Express Mail label number for this envelope was identified on the transmittal letter filed with the application papers. In addition, the USPTO Express Mail database identifies 17 May 2002 as the date on which this Express Mail envelope was accepted by the USPS.

Based on applicant's statements, the Express Mail database acceptance date of 17 May 2002, and the 17 May 2002 "date in" entered by the USPS on the Express Mail label, it is concluded that the present application was deposited as "Express Mail" with the USPS on 17 May 2002. Accordingly, pursuant to 37 CFR 1.10(c), the international filing date is appropriately corrected to 17 May 2002.

CONCLUSION

Applicant's petition for correction of the international filing date is **GRANTED**.

The international filing date is corrected to **17 May 2002**. The "Notification Of The International Application Number And Of The International Filing Date" (Form PCT/RO/105) mailed 20 June 2002, which identified 20 May 2002 as the international filing date, is hereby **VACATED**.

A corrected "Notification Of The International Application Number And Of The International Filing Date" (Form PCT/RO/105) which correctly identifies the international filing date as **17 May 2002** is issued herewith. Copies of this decision and the corrected Form PCT/RO/105 will be forwarded to the International Bureau.

This application is being forwarded to the RO/US for further processing in accordance with this decision.

Richard M. Ross
PCT Petitions Attorney
PCT Legal Office
Telephone: (571) 272-3296
Facsimile: (571) 273-0459

UNITED STATES PATENT AND TRADEMARK OFFICE

Commissioner for Patents
United States Patent and Trademark Office
P.O. Box 1450
Alexandria, VA 22313-1450
www.uspto.gov

Ken J. Pedersen
Pedersen & Company, PLLC
P.O. Box 2666
Boise, ID 83701

COPY MAILED

MAY 01 2007

OFFICE OF PETITIONS

In re Application of	:	
Jeffrey R. Jessing	:	
Application No. 10/898,663	:	DECISION ON PETITION
Filed: July 23, 2004	:	TO WITHDRAW
Attorney Docket No. 3505	:	FROM RECORD
	:	

This is a decision on the Request to Withdraw as attorney or agent of record under 37 C.F.R. § 1.36(b), filed December 18, 2006.

The request is **NOT APPROVED**.

A grantable request to withdraw as attorney/agent of record must be signed by every attorney/agent seeking to withdraw or contain a clear indication that one attorney is signing on behalf of another/others. A request to withdraw will not be approved unless at least 30 (thirty) days would remain between the date of approval and the later of the expiration date of a time to file a response or the expiration date of the maximum time period which can be extended under 37 C.F.R. § 1.136(a).

The Office cannot approve the request at this time since the reasons provided do not meet any of the conditions under the mandatory or permissive categories enumerated in 37 CFR 10.40. Section 10.40 of Title 37 of the Code of Federal Regulation states, "[a] practitioner shall not withdraw from employment in a proceeding before the Office without permission from the Office[.]" More specifically, 37 CFR 10.40 states, "[i]f paragraph (b) of this section is not applicable, a practitioner may not request permission to withdraw in matter pending before the Office unless such request or such withdrawal is" for one the permissive reasons listed in 37 CFR 10.40(c). The reason set forth in the request, "[t]he designated agent of client has been uncooperative and persistently tardy, and the client after notice, has not proposed a solution to our communication problem" does not meet any of the conditions set forth in 37 CFR 10.40.

This reason is further unacceptable because it needs further clarification. If it is a breakdown of an attorney/client relationship it should be stated.

A courtesy copy of this decision is being mailed to applicant.

All future communications from the Office will continue to be directed to the above-listed address until otherwise notified by applicant.

A final rejection was mailed on December 12, 2006. Failure to timely reply will result in the abandonment of this application.

Telephone inquiries concerning this decision should be directed to Kimberly Inabinet at 571-272- 4618.

Frances Hicks
Petitions Examiner
Office of Petitions

cc: Jeffrey R. Jessing
P.O. Box 408
Depoe Bay, OR 97341

UNITED STATES PATENT AND TRADEMARK OFFICE

Commissioner for Patents
United States Patent and Trademark Office
P.O. Box 1450
Alexandria, VA 22313-1450
www.uspto.gov

DYKAS, SHAVER & NIPPER, LLP
P.O. BOX 877
BOISE, ID 83701-0877

COPY MAILED

JUN 17 2009

OFFICE OF PETITIONS

In re Application of :
Alessandro Seneci, et al. :
Application No. 10/898,664 :
Filed: July 23, 2004 :
Attorney Docket No.: GRAA101CIP :

DECISION GRANTING PETITION
UNDER 37 CFR 1.55(c)

This is a decision in response to the petition, filed March 30, 2009, which is being treated as a petition under 37 CFR 1.55(c) to accept an unintentionally delayed claim under 35 U.S.C. § 119(a)-(d) for the benefit of priority to foreign Italian Application No. MI99A002206, filed October 21, 1999.

The petition, as construed, is **GRANTED**.

Petitioner requests that the priority claim be corrected to show that this application is a continuation-in-part of parent application No. 10/089,262, which is a national stage entry of PCT/IT00/00424, which claims foreign priority to MI99A002206. Petitioner explains that the present application failed to include a claim to priority to the PCT application or the foreign application, but did claim priority to the parent application. Accordingly, petitioner seeks to correct the priority claim through the parent application to the PCT application and the foreign application.

Since the international application (PCT/IT00/00424) is not an earlier application (it has the same filing date as the national stage), a priority claim in the national stage of the international application (10/089,262) by way of a petition is unnecessary. Therefore, the petition is being treated as a request to accept an unintentionally delayed claim for the benefit of priority to the foreign application (MI99A002206).

This pending nonprovisional application was filed after November 29, 2000, and did not include a reference to the foreign application, for which benefit is now sought, within the later of four months from the actual filing date of the application or sixteen months from the filing date of the prior foreign application. Since the claim for priority is submitted after the period specified in 37 CFR 1.55(a)(1)(i), this is an appropriate petition under the provisions of 37 CFR 1.55(c).

A petition under 37 CFR 1.55(c) to accept an unintentionally delayed claim for priority requires:

(1) The nonprovisional application claiming the benefit of an earlier filing date must be filed on or after November 29, 2000;

(2) the claim submitted with the petition must identify the prior foreign application for which priority is claimed, as well as any foreign application for the same subject matter and having a filing date before that of the application for which priority is claimed, by the application number, country, and the filing date and be included either in an oath or declaration (37 CFR 1.63(c)(2)) or in an Application Data Sheet (37 CFR 1.76(b)(6);

(3) the surcharge as set forth in 37 CFR 1.17(t);

(4) a statement that the entire delay between the date the claim was due under 37 CFR 1.55(a)(1) and the date the claim was filed was unintentional. (The Director may require additional information where there is a question whether the delay was unintentional.); and

(5) the above-identified nonprovisional application must be filed within 12 months of the filing date of the foreign application.

All of the above requirements having been satisfied, the late claim for priority under 35 U.S.C. § 119(a)-(d) is accepted as being unintentionally delayed.

The granting of the petition to accept the delayed benefit claim to the prior-filed application under 37 CFR 1.55(c) should not be construed as meaning that this application is entitled to the benefit of the prior-filed application. In order for this application to be entitled to the benefit of the prior-filed application, all other requirements under 35 U.S.C. § 119(a)-(d) and 37 CFR 1.55(a)(1) must be met. Similarly, the fact that the corrected Filing Receipt accompanying this decision on petition includes the prior-filed application should not be construed as meaning that applicant is entitled to the claim for benefit of priority to the prior-filed application noted thereon. Accordingly, the examiner will, in due course, consider this benefit claim and determine whether this application is entitled to the benefit of the earlier filing date.

A corrected Filing Receipt, which includes the priority claim to the prior-filed foreign application, accompanies this decision on petition.

This application is being referred to Technology Center AU 1618 for consideration by the examiner of record of the foreign priority claim under 35 U.S.C. § 119(a)-(d).

Any inquiries directly pertaining to this matter may be directed to the undersigned at (571) 272-3204.

Sherry D. Brinkley
Petitions Examiner
Office of Petitions

ATTACHMENT: Corrected Filing Receipt

UNITED STATES PATENT AND TRADEMARK OFFICE

UNITED STATES DEPARTMENT OF COMMERCE
United States Patent and Trademark Office
Address: COMMISSIONER FOR PATENTS
P.O. Box 1450
Alexandria, Virginia 22313-1450
www.uspto.gov

APPLICATION NUMBER	FILING or 371(c) DATE	GRP ART UNIT	FIL FEE REC'D	ATTY.DOCKET.NO	TOT CLAIMS	IND CLAIMS
10/898,664	07/23/2004	1618	460	GRAA101CIP	12	1

CONFIRMATION NO. 3006

CORRECTED FILING RECEIPT

21658
DYKAS, SHAVER & NIPPER, LLP
P.O. BOX 877
BOISE, ID 83701-0877

OC000000036486086

Date Mailed: 06/15/2009

Receipt is acknowledged of this non-provisional patent application. The application will be taken up for examination in due course. Applicant will be notified as to the results of the examination. Any correspondence concerning the application must include the following identification information: the U.S. APPLICATION NUMBER, FILING DATE, NAME OF APPLICANT, and TITLE OF INVENTION. Fees transmitted by check or draft are subject to collection. Please verify the accuracy of the data presented on this receipt. **If an error is noted on this Filing Receipt, please submit a written request for a Filing Receipt Correction. Please provide a copy of this Filing Receipt with the changes noted thereon. If you received a "Notice to File Missing Parts" for this application, please submit any corrections to this Filing Receipt with your reply to the Notice. When the USPTO processes the reply to the Notice, the USPTO will generate another Filing Receipt incorporating the requested corrections**

Applicant(s)

Alessandro Seneci, Segrate, ITALY;
Pia Alberico, Milano, ITALY;

Assignment For Published Patent Application

Truffini & Regge' Farmaceutici SRL, Milano, ITALY

Power of Attorney:

Frank Dykas--28072
Robert Shaver--42145
Stephen Nipper--46260
Derek Maughan--52007

Domestic Priority data as claimed by applicant

This application is a CIP of 10/089,262 03/25/2002 ABN
which is a 371 of PCT/IT00/00424 10/20/2000

Foreign Applications

ITALY MI99A002206 10/21/1999

If Required, Foreign Filing License Granted: 09/14/2004

The country code and number of your priority application, to be used for filing abroad under the Paris Convention, is **US 10/898,664**

Projected Publication Date: Not Applicable

Non-Publication Request: No

Early Publication Request: No

**** SMALL ENTITY ****

Title

Gastroresistant tablets for alimentary, dietetic and therapeutic use

Preliminary Class

424

PROTECTING YOUR INVENTION OUTSIDE THE UNITED STATES

Since the rights granted by a U.S. patent extend only throughout the territory of the United States and have no effect in a foreign country, an inventor who wishes patent protection in another country must apply for a patent in a specific country or in regional patent offices. Applicants may wish to consider the filing of an international application under the Patent Cooperation Treaty (PCT). An international (PCT) application generally has the same effect as a regular national patent application in each PCT-member country. The PCT process **simplifies** the filing of patent applications on the same invention in member countries, but **does not result** in a grant of "an international patent" and does not eliminate the need of applicants to file additional documents and fees in countries where patent protection is desired.

Almost every country has its own patent law, and a person desiring a patent in a particular country must make an application for patent in that country in accordance with its particular laws. Since the laws of many countries differ in various respects from the patent law of the United States, applicants are advised to seek guidance from specific foreign countries to ensure that patent rights are not lost prematurely.

Applicants also are advised that in the case of inventions made in the United States, the Director of the USPTO must issue a license before applicants can apply for a patent in a foreign country. The filing of a U.S. patent application serves as a request for a foreign filing license. The application's filing receipt contains further information and guidance as to the status of applicant's license for foreign filing.

Applicants may wish to consult the USPTO booklet, "General Information Concerning Patents" (specifically, the section entitled "Treaties and Foreign Patents") for more information on timeframes and deadlines for filing foreign patent applications. The guide is available either by contacting the USPTO Contact Center at 800-786-9199, or it can be viewed on the USPTO website at http://www.uspto.gov/web/offices/pac/doc/general/index.html.

For information on preventing theft of your intellectual property (patents, trademarks and copyrights), you may wish to consult the U.S. Government website, http://www.stopfakes.gov. Part of a Department of Commerce initiative, this website includes self-help "toolkits" giving innovators guidance on how to protect intellectual property in specific countries such as China, Korea and Mexico. For questions regarding patent enforcement issues, applicants may call the U.S. Government hotline at 1-866-999-HALT (1-866-999-4158).

LICENSE FOR FOREIGN FILING UNDER

Title 35, United States Code, Section 184

Title 37, Code of Federal Regulations, 5.11 & 5.15

GRANTED

The applicant has been granted a license under 35 U.S.C. 184, if the phrase "IF REQUIRED, FOREIGN FILING LICENSE GRANTED" followed by a date appears on this form. Such licenses are issued in all applications where the conditions for issuance of a license have been met, regardless of whether or not a license may be required as

set forth in 37 CFR 5.15. The scope and limitations of this license are set forth in 37 CFR 5.15(a) unless an earlier license has been issued under 37 CFR 5.15(b). The license is subject to revocation upon written notification. The date indicated is the effective date of the license, unless an earlier license of similar scope has been granted under 37 CFR 5.13 or 5.14.

This license is to be retained by the licensee and may be used at any time on or after the effective date thereof unless it is revoked. This license is automatically transferred to any related applications(s) filed under 37 CFR 1.53(d). This license is not retroactive.

The grant of a license does not in any way lessen the responsibility of a licensee for the security of the subject matter as imposed by any Government contract or the provisions of existing laws relating to espionage and the national security or the export of technical data. Licensees should apprise themselves of current regulations especially with respect to certain countries, of other agencies, particularly the Office of Defense Trade Controls, Department of State (with respect to Arms, Munitions and Implements of War (22 CFR 121-128)); the Bureau of Industry and Security, Department of Commerce (15 CFR parts 730-774); the Office of Foreign AssetsControl, Department of Treasury (31 CFR Parts 500+) and the Department of Energy.

NOT GRANTED

No license under 35 U.S.C. 184 has been granted at this time, if the phrase "IF REQUIRED, FOREIGN FILING LICENSE GRANTED" DOES NOT appear on this form. Applicant may still petition for a license under 37 CFR 5.12, if a license is desired before the expiration of 6 months from the filing date of the application. If 6 months has lapsed from the filing date of this application and the licensee has not received any indication of a secrecy order under 35 U.S.C. 181, the licensee may foreign file the application pursuant to 37 CFR 5.15(b).

United States
Patent And
Trademark Office

P.O. Box 1450, Alexandria, Virginia 22313-1450 – www.uspto.gov

PETITION DECISION

09/29/04

Gordon R. Moriarty
Weingarten, Schurgin, Gagnebin & Lebovici
Ten Post Office Square
Boston, MA 02109

Dear Applicant:

The Box PG Pub replacement drawings for application number 10/898673 received on 08/23/04 by the U. S. Patent and Trademark Office will be included for patent publication.

Telephone inquiries should be directed to Kaletus King, Office of Pre-Grant Publication 703 605-4283.

Kaletus King

Signature of Reviewer, Office of Pre-Grant Publication

UNITED STATES PATENT AND TRADEMARK OFFICE

COMMISSIONER FOR PATENTS
UNITED STATES PATENT AND TRADEMARK OFFICE
P.O. BOX 1450
ALEXANDRIA, VA 22313-1450
www.uspto.gov

Paper No.

EDWARDS ANGELL
PALMER & DODGE LLP
P.O. BOX 55874
BOSTON MA 02205

COPY MAILED

AUG 15 2007

OFFICE OF PETITIONS

In re Application of	:	
Xie et al.	:	DECISION ON APPLICATION
Application No. 10/898,690	:	FOR
Filed: July 23, 2004	:	PATENT TERM ADJUSTMENT
Atty Docket No. 61331 (72021)	:	

This is a decision on the "REQUEST FOR RECONSIDERATION OF PATENT TERM ADJUSTMENT UNDER 37 CFR §1.705(d)," filed June 14, 2007. Applicants request that the initial determination of patent term adjustment under 35 U.S.C. 154(b) be corrected from one hundred thirty (130) days to one hundred seventy-six (176) days.

The application for patent term adjustment is **GRANTED**.

The Office has updated the PAIR screen to reflect that the correct Patent Term Adjustment (PTA) determination at the time of the mailing of the notice of allowance is ONE HUNDRED SEVENTY-SIX **(176)** days. A copy of the updated PAIR screen, showing the correct determination, is enclosed.

On March 15, 2007, the Office mailed the Determination of Patent Term Adjustment under 35 U.S.C. 154(b) in the above-identified application. The Notice stated that the patent term adjustment (PTA) to date is 130 days. On June 14, 2007, applicants timely submitted the instant application for patent term adjustment[1]. Applicants state that the response to the non-final Office action mailed March 29, 2006 was received in the Office on June 29, 2006, not August 14, 2006 as shown in PALM. As such, the

[1] PALM records indicate that the Issue Payment was filed on June 14, 2007.

response was filed within three months of the mail date of the Office action. Thus, the period of reduction of 46 days for taking in excess of three months to respond to the non-final Office action is incorrect.

Applicants state that this patent application is not subject to a terminal disclaimer.

Applicants are correct with respect to the period of reduction pursuant to 37 CFR 1.704(b). The amendment is of record with a date of receipt of June 29, 2006 via deposit in Express Mail pursuant to 37 CFR 1.10. No amendment was filed on August 14, 2006. Accordingly, the reduction of 46 days for applicant delay is not warranted.

In view thereof, the correct determination of patent term adjustment at the time of the mailing of the notice of allowance is 176 days.

Receipt of the $200.00 fee set forth in 37 CFR 1.18(e) is acknowledged. No additional fees are required.

The application is being forwarded to the Office of Patent Publication for issuance of the patent. The patent term adjustment indicated on the patent will include any additional patent term adjustment accrued for Office delay in issuing the patent after payment of the issue fee and all outstanding requirements having been met.

Telephone inquiries specific to this matter should be directed to the undersigned at (571) 272-3219.

Nancy Johnson
Senior Petitions Attorney
Office of Petitions

Enclosure: Copy of REVISED PAIR Screen

Day : Monday
Date: 8/13/2007

PALM INTRANET

Time: 16:13:23

PTA Calculations for Application: 10/898690			
Application Filing Date:	07/23/2004	PTO Delay (PTO):	187
Issue Date of Patent:		Three Years:	0
Pre-Issue Petitions:	0	Applicant Delay (APPL):	57
Post-Issue Petitions:	0	Total PTA (days):	176
PTO Delay Adjustment:	46		

File Contents History

Number	Date	Contents Description	PTO	APPL	START
59	08/13/2007	ADJUSTMENT OF PTA CALCULATION BY PTO	46		
50	03/15/2007	MAIL NOTICE OF ALLOWANCE			
49	03/14/2007	ISSUE REVISION COMPLETED			
48	03/14/2007	NOTICE OF ALLOWANCE DATA VERIFICATION COMPLETED			
47	03/14/2007	NOTICE OF ALLOWABILITY			
46	02/28/2007	DATE FORWARDED TO EXAMINER			
45	02/07/2007	AMENDMENT AFTER FINAL REJECTION			
44	01/23/2007	MAIL FINAL REJECTION (PTOL - 326)			
43	01/17/2007	FINAL REJECTION			
42	11/03/2006	INFORMATION DISCLOSURE STATEMENT CONSIDERED			
41	11/29/2006	DATE FORWARDED TO EXAMINER			
40	11/14/2006	SUPPLEMENTAL RESPONSE		11	36
39	11/03/2006	REFERENCE CAPTURE ON IDS			
38	11/03/2006	INFORMATION DISCLOSURE STATEMENT (IDS) FILED			
37	11/11/2006	DATE FORWARDED TO EXAMINER			
36	11/03/2006	RESPONSE AFTER NON-FINAL ACTION			
35	10/20/2006	MAIL NOTICE OF WITHDRAWN ACTION			
34	10/20/2006	MAIL NON-FINAL REJECTION			
33	10/16/2006	NON-FINAL REJECTION			
32	10/16/2006	LETTER WITHDRAWING / VACATING OFFICE ACTION			
31	09/19/2006	MAIL NON-FINAL REJECTION			
30	09/15/2006	NON-FINAL REJECTION			
29	08/14/2006	CASE DOCKETED TO EXAMINER IN GAU			

28	08/03/2006	CORRESPONDENCE ADDRESS CHANGE			
27	07/12/2006	DATE FORWARDED TO EXAMINER			
26	08/14/2006	RESPONSE AFTER NON-FINAL ACTION		46	24
25	06/14/2006	CASE DOCKETED TO EXAMINER IN GAU			
24	03/29/2006	MAIL NON-FINAL REJECTION	187		-1
23	03/22/2006	NON-FINAL REJECTION			
22	01/12/2005	INFORMATION DISCLOSURE STATEMENT CONSIDERED			
21	07/23/2004	INFORMATION DISCLOSURE STATEMENT CONSIDERED			
20	01/12/2005	INFORMATION DISCLOSURE STATEMENT (IDS) FILED			
19	12/15/2004	IFW TSS PROCESSING BY TECH CENTER COMPLETE			
18	10/07/2004	PRELIMINARY AMENDMENT			
17	07/23/2004	PRELIMINARY AMENDMENT			
16	07/23/2004	REFERENCE CAPTURE ON IDS			
15	07/23/2004	INFORMATION DISCLOSURE STATEMENT (IDS) FILED			
14	12/08/2004	CASE DOCKETED TO EXAMINER IN GAU			
13	10/25/2004	APPLICATION RETURN FROM OIPE			
12	10/25/2004	APPLICATION RETURN TO OIPE			
11	10/25/2004	APPLICATION DISPATCHED FROM OIPE			
10	10/25/2004	APPLICATION IS NOW COMPLETE			
9	10/07/2004	PAYMENT OF ADDITIONAL FILING FEE/PREEXAM			
8	10/07/2004	SMALL ENTITY STATEMENT (37 CFR 1.27)			
7	07/23/2004	CLAIM PRELIMINARY AMENDMENT			
6	10/07/2004	A STATEMENT BY ONE OR MORE INVENTORS SATISFYING THE REQUIREMENT UNDER 35 USC 115, OATH OF THE APPLIC			
5	09/15/2004	NOTICE MAILED--APPLICATION INCOMPLETE--FILING DATE ASSIGNED			
4	09/01/2004	CLEARED BY OIPE CSR			
3	09/01/2004	CASE CLASSIFIED BY OIPE			
2	08/05/2004	IFW SCAN & PACR AUTO SECURITY REVIEW			
1	07/23/2004	INITIAL EXAM TEAM NN			

Search Another: Application# Search

UNITED STATES PATENT AND TRADEMARK OFFICE

Commissioner for Patents
United States Patent and Trademark Office
P.O. Box 1450
Alexandria, VA 22313-1450
www.uspto.gov

LEONARD WEISS
2300 W. SAHARA AVENUE, BOX 34
LAS VEGAS NV 89102

COPY MAILED

DEC 0 3 2004

OFFICE OF PETITIONS

In re Application of
Iradj Hessabi
Application No. 10/898,701
Filed: July 26, 2004
Attorney Docket No: PA 105-04

DECISION ON PETITION

This is a decision on the paper filed November 18, 2004 in response to the Notice To File Corrected Application Papers mailed October 15, 2004, which is treated under 37 CFR 1.182.

The matter is **DISMISSED** as involving moot issues.

On July 26, 2004, applicant filed the above-identified application. However, on October 15, 2004, the Office of Initial Patent Examination mailed a "Notice to File Corrected Application Papers" stating that, a filing date had been assigned but, *inter alia*, Figures 4A and 4Bb as described in the specification appeared to have been omitted.

The mailing of a "Notice of Omitted Items" permits the applicant to either: (1) promptly establish prior receipt in the PTO of the omitted item at issue (generally by way of a date-stamped postcard receipt (MPEP 503)), or (2) promptly submit the omitted item in a nonprovisional application and accept the date of such submission as the application filing date. An applicant asserting that the omitted item was in fact deposited in the PTO with the application papers must file a petition (and the appropriate petition fee) with evidence of such deposit. An applicant desiring to submit the omitted item in a nonprovisional application and accept the date of such submission as the application filing date must file any omitted item with an oath or declaration in compliance with 37 CFR 1.63 and 1.64 referring to such item and a petition under 37 CFR 1.182 (with the petition fee under 37 CFR 1.17(h)) requesting the later filing date within two months of the date of the "Notice of Omitted Items" (37 CFR 1.181(f)).

Finally, the third option is in the absence of electing options 1) or 2) above, to constructively opt to accept the filing date which has been accorded with the papers filed upon application. With option 3), no petition under 37 CFR 1.182 is necessary for that purpose.

In this case, a review of the file does not reveal that a petition has been filed however, the finance records show that a petition fee in the amount of $130.00 has been received.

In the absence of a petition, since applicant neither admits nor denies that Figures 4A and 4B were present upon filing and in view of the amendment filed November 18, 2004 in response to the Notice, it appears that applicant is constructively electing to have the application accepted as filed on July 26, 2004 without Figures 4A and 4B as described in the specification.

The Office of Initial Patent Examination will be notified to process the application without Figures 4A and 4B as described in the specification as part of the original disclosure and the preliminary amendment adding the drawings figures will be retained in the file for review by the Examiner in due course.

Any further concerns specific to this matter should be directed to the undersigned Petitions Attorney at (571) 272-3212.

Patricia Faison-Ball

Patricia Faison-Ball
Senior Petitions Attorney
Office of Petitions

UNITED STATES PATENT AND TRADEMARK OFFICE

Commissioner for Patents
United States Patent and Trademark Office
P.O. Box 1450
Alexandria, VA 22313-1450
www.uspto.gov

GRAY CARY WARE & FREIDENRICH LLP
4365 EXECUTIVE DRIVE
SUITE 1100
SAN DIEGO CA 92121-2133

COPY MAILED

DEC 3 0 2004

OFFICE OF PETITIONS

In re Application of
Belyaev
Application No. 10/898,717
Filed: July 23, 2004
Attorney Docket No. ABVECT1100-1
For: CHAPERONE EXPRESSION GENOMES

ON PETITION

This is a decision on the petition filed December 3, 2004 (certificate of mailing date November 30, 2004), requesting, in effect, that the Notice to File Missing Parts of Nonprovisional Application, mailed September 30, 2004, be withdrawn, insofar as it alleges that Figure 1 appeared to have been omitted from the application. The petition will be treated under 37 CFR 1.53(e).

The petition is **dismissed**.

The application was filed on July 23, 2004. However, on September 30, 2004, the Office of Initial Patent Examination mailed a Notice stating that the application had been accorded a filing date of July 23, 2004, and advising applicant that Figure 1 described in the specification appeared to have been omitted.

In response, the present petition was filed. Petitioner provides a copy of his return receipt postcard that contains an affixed Office generated barcode citing July 23, 2004 as the filing date. This return receipt postcard lists, *inter alia*, that the filing contained 12 sheets of drawings. A review of the application file reveals that there are 12 pages present. None of the sheets of drawings contain a "Figure 1".

The petition does not allege and is not accompanied by any evidence that any sheet of drawing containing the label Figure 1 was present in the Office on July 23, 2004. While the Brief Description of the Drawings lists Figure 1, the actual drawing figure in question contain only a "FIG1A" and a "FIG1B". It is apparent that petitioner referred to the drawings in an inconsistent manner in the Brief Description of the Drawings and in the drawing figures.

Therefore, the "Notice" mailed September 30, 2004, was correct in advising applicants that Figure 1 appeared to have been omitted. The "Notice" was properly mailed and will not be withdrawn. The petition fee is required, since the petition was not necessary to correct any PTO error. Pursuant to petitioner's authorization, deposit account no.07-1896 will be charged the current petition fee, which is $400.00.

The application is being returned the Office of Initial Patent Examination for further processing with the presently accorded filing date of July 23, 2004. The examiner will address the preliminary amendment to the specification.

Telephone inquiries concerning this decision should be directed to the undersigned at (571) 272-3230.

E. Shirene Willis

E. Shirene Willis
Senior Petitions Attorney
Office of Petitions

UNITED STATES PATENT AND TRADEMARK OFFICE

Commissioner for Patents
United States Patent and Trademark Office
P.O. Box 1450
Alexandria, VA 22313-1450
www.uspto.gov

Paper No.

BOZICEVIC, FIELD &
FRANCIS LLP
1900 University Ave.,
Suite 200
East Palo Alto, CA 94303

MAILED

JUL 13 2009

OFFICE OF PETITIONS

In re Patent No. 7,393,656	:	ON PETITIONS
Perez et al.	:	under 37 CFR 1.182
Issue Date: July 1, 2008	:	and
Application No. 10/898,734	:	under 37 CFR 1.183
Filed: July 21, 2004	:	and
Attorney Docket No. STAN-494	:	ON REQUEST FOR RECONSIDERATION
	:	OF PATENT TERM ADJUSTMENT
	:	

This is a decision on the 1) Petition for Expedited Review Under 37 C.F.R. 1.182, requesting expedited review of the accompanying Petition under 37 C.F.R. 1.183; the 2) Petition under 37 C.F.R. 1.183, requesting that the Office suspend the rules and consider on the merits a Request for Reconsideration of Patent Term Adjustment under 37 C.F.R. 1.705(d) filed more than two months from the date the above-referenced patent issued; and on the 3) Request for Reconsideration of Patent Term Adjustment under 37 C.F.R. 1.705(d), all of which were filed on November 24, 2008.

The petition for expedited review under 37 CFR 1.182 is **granted**.

The petition under 37 CFR 1.183 is **dismissed**.

The request for reconsideration of patent term adjustment under 37 CFR 1.705(d) is **dismissed as untimely filed**.

Any request for reconsideration, whether directed to the decision on petition under 37 CFR 1.183 or to the decision on application for patent term adjustment under 37 CFR 1.705(d), must be filed within two months of the mailing date of this decision. Extensions of time under 37 CFR 1.136 are not permitted. See § 1.181(f).

BACKGROUND

On July 1, 2008, the above-identified application matured into U.S. Patent No. 7,393,656, with a revised patent term adjustment of 385 days. No request for reconsideration of the patent term adjustment indicated in the patent was filed within two months of the date the patent issued. Patentee now petitions under 37 C.F.R. § 1.183 to (i) suspend or waive the requirement of 37 C.F.R. § 1.705(d) that a Request for Reconsideration of Patent Term Adjustment be filed within two months of the date the patent issued; and (ii) consider the enclosed Request for Reconsideration of Patent Term Adjustment. Patentee makes this request, "in view of the extraordinary situation presented by the recent decision in *Wyeth v. Dudas*, No. 07-1492 (D.D.C. Sept. 30, 2008)." Further, patentee requests expedited review of this petition.

ON PETITION FOR EXPEDITED REVIEW

37 C.F.R. 1.182 provides that:

> All situations not specifically provided for in the regulations of this part will be decided in accordance with the merits of each situation by or under the authority of the Director, subject to such other requirements as may be imposed, and such decision will be communicated to the interested parties in writing. Any petition seeking a decision under this section must be accompanied by the petition fee set forth in § 1.17(f).

The instant request is properly treated under 37 CFR 1.182 as the expedited review of petitions is not specifically provided for in the regulations. The petition includes the fee required for such consideration. Petitioner states no specific basis for their request. Nonetheless, the request is directed to the expedited review of a petition requesting relief in view of a recent decision by the United States District Court for the District of Columbia in Wyeth v. Dudas, No. 07-1492 (D.D.C.

September 30, 2008). Given the issues raised by the District Court decision in Wyeth and the statutory timeframe for taking any court action pursuant to 35 U.S.C. 154(b)(4)(A), it is determined that consideration of the petition under 37 CFR 1.183 out of turn is justified

The Petition under 37 C.F.R. 1.182 for expedited review is **GRANTED**.

Accordingly, consideration now turns to the Petition under 37 CFR 1.183.

ON PETITION UNDER 37 CFR 1.183
TO WAIVE THE TWO-MONTH REQUIREMENT OF 37 CFR 1.705(d)

The above-referenced patent issued on July 1, 2008. A request for reconsideration of the patent term adjustment indicated in the patent was not filed until November 24, 2008. Petitioner requests that the Office suspend the rules and consider on the merits the Request for Reconsideration of Patent Term Adjustment under 37 C.F.R. 1.705(d) even though it was untimely filed more than two months from the date the patent issued.

The relevant regulation, 37 CFR 1.705(d), provides that:

> If there is a revision to the patent term adjustment indicated in the notice of allowance, the patent will indicate the revised patent term adjustment. If the patent indicates or should have indicated a revised patent term adjustment, *any request for reconsideration of the patent term adjustment indicated in the patent must be filed within two months of the date the patent issued* and must comply with the requirements of paragraphs (b)(1) and (b)(2) of this section. Any request for reconsideration under this section that raises issues that were raised, or could have been raised, in an application for patent term adjustment under paragraph (b) of this section shall be dismissed as untimely as to those issues. (*emphasis* added).

By the express provisions of 37 CFR 1.705(d), a request for reconsideration of patent term adjustment must be filed within two months of the date the patent issued. It is undisputed that no such request for reconsideration was filed by September 1,

2008, the date two months from the date this patent issued, July 1, 2008. Rather, on November 24, 2008, nearly two months after the issuance of a decision in Wyeth v. Dudas on September 30, 2008, petitioner filed the instant request for waiver of the two-month requirement.

37 CFR 1.183 provides that:

> In an extraordinary situation, when justice requires, any requirement of the regulations in this part which is not a requirement of the statutes may be suspended or waived by the Director or the Director's designee, sua sponte, or on petition of the interested party, subject to such other requirements as may be imposed. Any petition under this section must be accompanied by the petition fee set forth in § 1.17(f).

Preliminarily, it is recognized that the two-month requirement of 37 CFR 1.705(d) is a requirement of the regulations and not a statutory requirement. The statute, 35 U.S.C. 154, requires the Office to provide the applicant one opportunity to request reconsideration of any patent term adjustment determination made by the Director. But, the statute allows the Director to establish the procedures for requesting such reconsideration. Those procedures[1] include pursuant to 37 CFR 1.705(d) setting a two-month period for filing a request for reconsideration of the

---

[1] 35 U.S.C. § 154(b)(3) provides that the USPTO shall: (1) prescribe regulations establishing procedures for the application for and determination of patent term adjustments under 35 U.S.C. § 154(b); (2) make a determination of any patent term adjustment under 35 U.S.C. § 154(b) and transmit a notice of that determination with the notice of allowance under 35 U.S.C. § 151; and (3) provide the applicant one opportunity to request reconsideration of any patent term adjustment determination. Pursuant to the mandate and authority in 35 U.S.C. § 154(b)(3), the USPTO promulgated 37 C.F.R. § 1.705, which provides that: (1) the notice of allowance will include notification of any patent term adjustment under 35 U.S.C. § 154(b)(37 C.F.R. § 1.705(a)); (2) any request for reconsideration of the patent term adjustment indicated in the notice of allowance (except as provided in 37 C.F.R. § 1.705(d)) must be by way of an application for patent term adjustment filed no later than the payment of the issue fee and accompanied by (inter alia) the fee set forth in 37 C.F.R. § 1.18(e)(37 C.F.R. § 1.705(b)); and (3) if the patent indicates or should have indicated a revised patent term adjustment, any request for reconsideration of the patent term adjustment indicated in the patent must be filed within two months of the date the patent issued.

revised patent term adjustment indicated in the patent. As such, it is within the Director's authority to waive the two-month requirement.

Having considered petitioner's arguments, it is concluded that waiver of the two-month requirement is not warranted. The primary basis for requesting waiver set forth by petitioner is "the extraordinary situation presented by the recent decision in Wyeth v. Dudas, No. 07-1492 (D.D.C. Sept. 30, 2008)." Specifically, petitioner states that in Wyeth, the U.S. District Court for the District of Columbia held that contrary to USPTO practice, a patentee is entitled to Patent Term Adjustment credit for examination delay under 37 CFR 1.702(b) in addition to any examination delay under 37 CFR 1.702(a), to the extent that the two periods of delay "do not occur on the same calendar day or days." Petitioner argues that they could not have filed a Request for Reconsideration of Patent Term Adjustment within two months of the date the above-referenced patent issued because the basis for the Request for Reconsideration of Patent Term Adjustment is the Wyeth decision, which was entered more than two months after the issuance of their patent. Further, petitioner argues that waiver is warranted as although the request for reconsideration is being filed outside of the two-month period, it is being filed within the 180-day statutory period for filing a civil action.

First, of all, the issuance of the Wyeth Opinion is not an extraordinary situation. Wyeth followed the procedure set forth in 37 CFR 1.705 for requesting reconsideration of the patent term adjustment determination. Then, pursuant to 35 U.S.C. 154(b)(4)(A)[2], Wyeth timely filed a complaint in District Court seeking judicial review of the Office's decision. A Memorandum Opinion and Order, the Wyeth decision of September 30, 2008, directed to the parties involved was issued.

---

[2] 35 U.S.C. 154(b)(4) (A) APPEAL OF PATENT TERM ADJUSTMENT DETERMINATION. – (A) An applicant dissatisfied with a determination made by the Director under paragraph (3) shall have remedy by a civil action against the Director filed in the United States District Court for the District of Columbia within 180 days after the grant of the patent. Chapter 7 of title 5 shall apply to such action. Any final judgment resulting in a change to the period of adjustment of the patent term shall be served on the Director, and the Director shall thereafter alter the term of the patent to reflect such change.

The fact that any relief ultimately granted in Wyeth would benefit patentee had they timely filed a request for reconsideration does not make the situation extraordinary. Petitioner chose not to challenge their revised patent term adjustment within the two-month period. Petitioner's argument that they could not have filed a Request for Reconsideration of Patent Term Adjustment within two months of the date the above-referenced patent issued because the basis for the Request for Reconsideration of Patent Term Adjustment is the Wyeth decision, which was entered more than two months after the issuance of their patent, is not compelling. Petitioner could have filed a Request for Reconsideration of Patent Term Adjustment as Wyeth did. It is acknowledged that petitioner may have chose not to file a request for reconsideration based on a conclusion that the Office's interpretation of 35 U.S.C. § 154(b)(2)(A) was correct. Nonetheless, the fact that the District Court has now issued an Opinion contrary to the Office's interpretation does not make the situation extraordinary. This is not unlike any other situation where a patentee (or applicant) challenges a final agency decision and the decision upon judicial review could have had applicability to another patentee (or applicant) had they taken such action. In fact, many patentees may be in the same situation as petitioner with respect to the Wyeth decision.

Further, the fact that the 180-day period for filing a civil action pursuant to 35 U.S.C. § 154(b)(4)(A) has not expired does not make the situation extraordinary. With respect to seeking judicial relief pursuant to 35 U.S.C. § 154(b)(4)(A), the Office has made clear that the fundamental principle of administrative law that one must first exhaust his or her administrative remedies before resort is had to the courts, and that the failure to seek administrative relief within the prescribed time period forecloses the right to judicial relief applies. In re Patent No. 6,484,146, 71 U.S.P.Q.2d (November 26, 2003)(Citing Barrington Manor Apartments Corp. v. United States, 392 F.2d 224, 227-228 (Ct. Cl. 1968); see also Mackay v. Commissioner of Patents and Trademarks, No. 99-1305, 1999, U.S. App. LEXIS 25718, at *4-5 (Fed. Cir., Oct. 18, 1999)). Petitioner if not on notice by established principles of administrative law was on notice by the Office's issuance of the above-cited Opinion that failure to file a request for reconsideration of patent term adjustment within the two-month period as required would likely foreclose their right to judicial relief. Yet they chose to not to file a request for reconsideration within the two-month

period. This consequence of their failure does not render the failure an extraordinary situation warranting waiver of the two-month requirement. The key consideration, regardless of the time remaining to file a civil action, in determining whether waiver is warranted is whether the circumstance that led to petitioner failing to meet the two-month requirement was an extraordinary situation where justice requires waiver.

Petitioner simply fails to articulate how their failure to file a request for reconsideration of patent term adjustment within two months of the issue date of the patent was due to an extraordinary situation. Petitioner cannot rely on Wyeth's actions or the Wyeth decision to establish that their situation was extraordinary.

Moreover, justice does not require waiver of the two-month requirement. Justice requires that the Office continue to devote its resources to the adjudication of timely filed requests for reconsideration under 37 CFR 1.705(b) and (d). Further, upon ultimate resolution of the interpretation of 37 CFR 1.702, justice requires that the Office determine consistent with relevant law and practice, and appropriate Court or legislative guidance, the applicability of any changes as to all affected patentees who failed to timely seek administrative remedy, and thus, could not seek judicial review. The fact that time remains for seeking judicial review does not change this conclusion. It would be arbitrary to make an exception for this petitioner because they have for example, 30 days remaining to file a civil action rather than 2 days or 0 days. In addition, given that the law only allows 180-days for both the filing of a petition and for the Office's consideration of that petition petitioner's unexplained nearly two-month delay in filing the petition weighs against them. The remaining period to file a civil action does not so distinguish petitioner's situation from any other patentee who failed to meet the two-month deadline for filing a request for reconsideration of patent term adjustment determination such that justice requires waiver.

In view thereof, the petition under 37 CFR 1.183 for waiver of the two-month requirement of 37 CFR 1.705(d) is **dismissed**.

Accordingly, consideration now turns to the Request for Reconsideration of Patent Term Adjustment under 37 CFR 1.705(d).

ON REQUEST FOR RECONSIDERATION OF PATENT TERM ADJUSTMENT UNDER 37 CFR 1.705(d)

This is a decision on the "REQUEST FOR RECONSIDERATION OF PATENT TERM ADJUSTMENT UNDER 37 CFR 1.705(d)," filed November 24, 2008. Therein, patentee requests correction of the patent term adjustment (PTA) indicated in the patent to five hundred eighty-three (583) days.

On July 1, 2008, the above-identified application matured into U.S. Patent No. 7,393,656 with a revised patent term adjustment of 385 days. The instant request for reconsideration was filed more than four months after the issuance of the patent, on November 24, 2008.

No error in the printing of the patent has been shown. The patent term adjustment indicated on the patent reflects the Office's determination of patent term adjustment shown in the PAIR system for this application. 37 CFR 1.705(d) provides the sole avenue before the Office for requesting reconsideration of the Office's determination of patent term adjustment indicated in the patent. Moreover, § 1.705(d) states that "any request for reconsideration of the patent term adjustment indicated in the patent must be filed within two months of the date the patent issued and must comply with the requirements of paragraphs (b)(1) and (b)(2) of this section." Since the request was not filed within two months of the issue date of the patent, the request is properly **dismissed as untimely filed**.

CONCLUSION

The request for expedited consideration of the petition to waive or suspend the two-month requirement of 37 CFR 1.705(d) is granted. However, it is determined that waiver of the requirement pursuant to 37 CFR 1.183 is not warranted. Accordingly, the request for reconsideration of the patent term adjustment under 37 CFR 1.705(d) filed more than two months after the issue date of the patent is dismissed as untimely filed.

Receipt of the change of correspondence address filed March 9, 2009 is acknowledged and made of record.

Telephone inquiries specific to this matter should be directed to Nancy Johnson, Senior Petitions Attorney, at (571) 272-3219.

Nancy Johnson for

Kery A. Fries
Senior Legal Advisor
Office of Patent Legal Administration

UNITED STATES PATENT AND TRADEMARK OFFICE

UNITED STATES DEPARTMENT OF COMMERCE
United States Patent and Trademark Office
Address: COMMISSIONER FOR PATENTS
P.O. Box 1450
Alexandria, Virginia 22313-1450
www.uspto.gov

HARNESS, DICKEY & PIERCE, P.L.C.
P.O. BOX 828
BLOOMFIELD HILLS, MI 48303

Mail Date: 04/21/2010

Applicant	: Jozsef Aszodi	: DECISION ON REQUEST FOR
Patent Number	: 7612087	: RECALCULATION of PATENT
Issue Date	: 11/03/2009	: TERM ADJUSTMENT IN VIEW
Appliction No	: 10/898,754	: OF WYETH AND NOTICE OF INTENT TO
Filed	: 07/26/2004	: ISSUE CERTIFICATE OF CORRECTION
		:

The Request for Recalculation is **GRANTED** to the extent indicated.

The patent term adjustment has been determined to be **1385** days. The USPTO will *sua sponte* issue a certificate of correction reflecting the amount of PTA days determined by the recalculation.

Prior to the issuance of the certificate of correction, the USPTO will afford patentee an opportunity to be heard and request reconsideration. Accordingly, patentee has **one month or thirty (30) days**, whichever is longer, to file a request for reconsideration of this patent term adjustment calculation. See 35 U.S.C. 154(b)(3)(B)(ii) and 37 CFR 1.322(a)(4). No extensions of time will be granted under 37 CFR 1.136.

Patentee should use document code PET.OP if electronically filing a request for reconsideration of this patent term adjustment calculation. The patentee must also include the information required by 37 CFR 1.705(b)(2) and the fee required by 37 CFR 1.18(e). If patentee does not file a timely request for reconsideration of this patent term adjustment calculation including the information required by 37 CFR 1.705(b)(2) and the fee required by 37 CFR 1.18(e), the USPTO will issue a certificate of correction reflecting the PTA determination noted above.

Patentee should be aware that in order to preserve the right to review in the United States District Court for the District of Columbia of the USPTO patent term adjustment determination, patentee must ensure that he or she also take the steps required under 35 U.S.C. 154(b)(4)(A) in a timely manner. Nothing in the request for recalculation should be construed as providing an alternative time frame for commencing a civil action under 35 U.S.C. 154(b)(4)(A).

Any questions concerning this decision should be directed to the Office of Patent Legal Administration at 571-272-7702.

SPE RESPONSE FOR CERTIFICATE OF CORRECTION

Paper No.:20100223

DATE : February 22, 2010

TO SPE OF : ART UNIT 3782

SUBJECT : Request for Certificate of Correction on Patent No.: 7594754

A response is requested with respect to the accompanying request for a certificate of correction.

Please complete this form and return with file, within **7** days to:
Certificates of Correction Branch - ST (South Tower) 9A22
Palm location **7590** - Tel. No. (703) 305-8309

With respect to the change(s) requested, correcting Office and/or Applicant's errors, should the patent read as shown in the certificate of correction? No new matter should be introduced, nor should the scope or meaning of the claims be changed.

Thank You For Your Assistance **Certificates of Correction Branch**

The request for issuing the above-identified correction(s) is hereby:

Note your decision on the appropriated box.

☒ **Approved** All changes apply.

☐ **Approved in Part** Specify below which changes **do not** apply.

☐ **Denied** State the reasons for denial below.

Comments:

/NATHAN J NEWHOUSE/
Supervisory Patent Examiner.Art Unit 3782

UNITED STATES PATENT AND TRADEMARK OFFICE

UNITED STATES DEPARTMENT OF COMMERCE
United States Patent and Trademark Office
Address: COMMISSIONER FOR PATENTS
P.O. Box 1450
Alexandria, Virginia 22313-1450
www.uspto.gov

DEAN D. SMALL
THE SMALL PATENT LAW GROUP LLP
225 S. MERAMEC, STE. 725T
ST. LOUIS, MO 63105

Mail Date: 04/20/2010

Applicant	: Hernan Altman	: DECISION ON REQUEST FOR
Patent Number	: 7613492	: RECALCULATION of PATENT
Issue Date	: 11/03/2009	: TERM ADJUSTMENT IN VIEW
Appliction No	: 10/898,781	: OF WYETH AND NOTICE OF INTENT TO
Filed	: 07/26/2004	: ISSUE CERTIFICATE OF CORRECTION
		:

The Request for Recalculation is **GRANTED** to the extent indicated.

The patent term adjustment has been determined to be **1028** days. The USPTO will *sua sponte* issue a certificate of correction reflecting the amount of PTA days determined by the recalculation.

Prior to the issuance of the certificate of correction, the USPTO will afford patentee an opportunity to be heard and request reconsideration. Accordingly, patentee has **one month or thirty (30) days**, whichever is longer, to file a request for reconsideration of this patent term adjustment calculation. See 35 U.S.C. 154(b)(3)(B)(ii) and 37 CFR 1.322(a)(4). No extensions of time will be granted under 37 CFR 1.136.

Patentee should use document code PET.OP if electronically filing a request for reconsideration of this patent term adjustment calculation. The patentee must also include the information required by 37 CFR 1.705(b)(2) and the fee required by 37 CFR 1.18(e). If patentee does not file a timely request for reconsideration of this patent term adjustment calculation including the information required by 37 CFR 1.705(b)(2) and the fee required by 37 CFR 1.18(e), the USPTO will issue a certificate of correction reflecting the PTA determination noted above.

Patentee should be aware that in order to preserve the right to review in the United States District Court for the District of Columbia of the USPTO patent term adjustment determination, patentee must ensure that he or she also take the steps required under 35 U.S.C. 154(b)(4)(A) in a timely manner. Nothing in the request for recalculation should be construed as providing an alternative time frame for commencing a civil action under 35 U.S.C. 154(b)(4)(A).

Any questions concerning this decision should be directed to the Office of Patent Legal Administration at 571-272-7702.

UNITED STATES PATENT AND TRADEMARK OFFICE

Commissioner for Patents
United States Patent and Trademark Office
P.O. Box 1450
Alexandria, VA 22313-1450
www.uspto.gov

WEISS & MOY PC
4204 NORTH BROWN AVENUE
SCOTTSDALE AZ 85251

COPY MAILED
OCT 01 2008
OFFICE OF PETITIONS

In re Application of
Debra BLAKESLEE
Application No. 10/898,795
Filed: July 26, 2004
Attorney Docket No. 6107P2811

DECISION ON PETITION

This is a decision on the renewed petition under the unintentional provisions of 37 CFR 1.137(b), filed June 12, 2008 to revive the above-identified application.

The petition is **GRANTED**.

The above identified application became abandoned for failure to reply in a timely manner to the requirement for restriction/election, mailed September 28, 2006, which set a shortened statutory period for reply of one (1) month. No extensions of time under the provisions of 37 CFR 1.136(a) were obtained. Accordingly, the application became abandoned on October 29, 2006.

The renewed petition satisfies the requirements of 37 CFR 1.137(b) in that petitioner has supplied (1) the reply in the form of an restriction/election, (2) the petition fee of $770, and (3) a proper statement of unintentional delay.

This application has been abandoned for an extended period of time. The U.S. Patent and Trademark Office is relying on petitioner's duty of candor and good faith and accepting the statement that "the entire delay in filing the required reply from the due date for the reply until the filing of a grantable petition pursuant to 37 CFR 1.137(b) was unintentional." See Changes to Patent Practice and Procedure, 62 Fed. Reg., at 53160 and 53178; 1203 Off. Gaz. Pat. Office, at 88 and 103 (responses to comments 64 and 109) (applicant obligated under 37 CFR 10.18 to inquire into the underlying facts and circumstances when providing the statement required by 37 CFR 1.137(b) to the U.S. Patent and Trademark Office).

Telephone inquiries concerning this decision should be directed to Karin Reichle at (571) 272-6051.

This application is being referred to Technology Center AU 3751 for appropriate action by the Examiner in the normal course of business on the reply received June 12, 2008.

David Bucci
Petitions Examiner
Office of Petitions

UNITED STATES PATENT AND TRADEMARK OFFICE

Commissioner for Patents
United States Patent and Trademark Office
P.O. Box 1450
Alexandria, VA 22313-1450
www.uspto.gov

MAILED

JUN 7 - 2005

DIRECTOR'S OFFICE
TECHNOLOGY CENTER 2600

GIFFORD, KRASS, GROH, SPRINKLE &
CITKOWSKI, P.C.
P.O. BOX 7021
TROY, MI 48007-7021

In re Application of
Zaher Al-Sheikh
Application No. 10/898,811
Filed: July 26, 2004
For: **USER AUTHORIZATION SYSTEM CONTAINING A USER IMAGE**

DECISION ON PETITION
TO MAKE SPECIAL

This is a decision on the petition filed April 4, 2005 under 37 CFR §1.102(d) (and supplemented on May 19, 2005) to make the application special.

A grantable petition under 37 CFR §1.102(d) and MPEP §708.02, section II (Infringement), must be accompanied by the required fee and a statement alleging:

(1) that there is an infringing device or product actually on the market or method in use;
(2) that a rigid comparison of the alleged infringing device, product, or method with the claims of the application has been made, and that, in his or her opinion, some of the claims are unquestionably infringed; and
(3) that he or she has made or caused to be made a careful and thorough search of the prior art or has a good knowledge of the pertinent prior art.

Further, Applicant must provide a copy of each of the references deemed most closely related to the subject matter encompassed by the claims if the references are not already of record.

The petitioner meets all of the above requirements. Accordingly, the Petition is **GRANTED**.

The application file is being forwarded to the examiner for expedited prosecution.

Doris To
Special Program Examiner
Technology Center 2600
Communications

SPE RESPONSE FOR CERTIFICATE OF CORRECTION

Paper No.: _____

DATE : November 1, 2006

TO SPE OF : ART UNIT 3745

SUBJECT : Request for Certificate of Correction for Appl. No.: 10/898835 Patent No.: 7,097,419 B2

Please respond to this request for a certificate of correction within 7 days.

Please review the requested changes/corrections as shown in the **COCIN** document(s) in the IFW application image. No new matter should be introduced, nor should the scope or meaning of the claims be changed.

Please complete the response (see below) and forward the completed response to scanning using document code **COCX**.

Elisha Evans

Certificates of Correction Branch

703-308-9390 ext. *110*

Thank You For Your Assistance

The request for issuing the above-identified correction(s) is hereby:

Note your decision on the appropriate box.

- ☑ **Approved** — All changes apply.
- ☐ **Approved in Part** — Specify below which changes **do not** apply.
- ☐ **Denied** — State the reasons for denial below.

Comments: _____

Edward Tosh — **SPE**

3745 — **Art Unit**

UNITED STATES PATENT AND TRADEMARK OFFICE

Commissioner for Patents
United States Patent and Trademark Office
P.O. Box 1450
Alexandria, VA 22313-1450
www.uspto.gov

COPY MAILED

JUN 1 8 2008

FOLEY AND LARDNER LLP
SUITE 500
3000 K STREET NW
WASHINGTON, DC 20007

In re Application of	:	
YADAV, Tapesh et al.	:	
Application No. 10/898,849	:	DECISION ON PETITION
Filed: July 26, 2004	:	TO WITHDRAW
Attorney Docket No. **037768-0172**	:	FROM RECORD
	:	

This is a decision on the Request to Withdraw as attorney or agent of record under 37 C.F.R. § 1.36(b), filed May 05, 2008.

The request is **Moot** because a revocation of power of attorney has been previously filed.

A review of the file record indicates that the power of attorney to Foley and Lardner LLP has been revoked by the assignee of the patent application on April 30, 2008. Accordingly, the request to withdraw under 37 C.F.R. § 1.36(b) is moot.

All future communications from the Office will continue to be directed to the below-listed address until otherwise notified by applicant.

Telephone inquires concerning this decision should be directed to Michelle R. Eason at 571-272-4231.

Michelle R. Eason
Paralegal Specialist
Office of Petitions

cc: **PPG INDUSTRIES INC**
INTELLECTUAL PROPERTY DEPT
ONE PPG PLACE
PITTSBURGH, PA 15272

UNITED STATES PATENT AND TRADEMARK OFFICE

COMMISSIONER FOR PATENTS
UNITED STATES PATENT AND TRADEMARK OFFICE
P.O. BOX 1450
ALEXANDRIA, VA 22313-1450
www.uspto.gov

DONALD F. KING
9302 LEE HIGHWAY
SUITE 1100
FAIRFAX, VA 22030

COPY MAILED

APR 18 2007

OFFICE OF PETITIONS

In re Application of	:	
Steven Dwain Zimmermann et al	:	
Application No. 10/898,865	:	DECISION ON PETITION
Filed: July 26, 2004	:	
Attorney Docket No. 0103079-0525106	:	

This is a decision on the petition under 37 CFR 1.137(b), filed January 23, 2007, to revive the above-identified application.

The petition is **DISMISSED**.

Any request for reconsideration of this decision must be submitted within TWO (2) MONTHS from the mail date of this decision. Extensions of time under 37 CFR 1.136(a) are permitted. The reconsideration request should include a cover letter entitled "Renewed Petition under 37 CFR 1.137(b)." This is **not** a final agency action within the meaning of 5 U.S.C. § 704.

This application became abandoned for failure to timely pay the issue and publication fees on or before October 20, 2006, as required by the Notice of Allowance and Fee(s) Due, mailed July 20, 2006. A Notice of Abandonment was mailed on November 29, 2006.

A grantable petition under 37 CFR 1.137(b) must be accompanied by: (1) the required reply, unless previously filed; (2) the petition fee as set forth in 37 CFR 1.17(m); (3) a statement that the entire delay in filing the required reply from the due date for the reply until the filing of a grantable petition pursuant to 37 CFR 1.137(b) was unintentional; and (4) any terminal disclaimer (and fee as set forth in 37 CFR 1.20(d)) required by 37 CFR 1.137(c). Where there is a question as to whether either the abandonment or the delay in filing a petition under 37 CFR 1.137 was unintentional, the Commissioner may require additional information. *See* MPEP 711.03(c)(II)(C). The instant petition lacks item (3) above.

As to item (3) above, the statement of unintentional delay is not considered at this time to be a properly submitted statement. In this regard, the petition containing the statement of unintentional delay is signed by Donald F. King, Chapter 7 Trustee for IPIX Corporation.

Petitioner's attention is directed to 37 CFR 1.33(b), which states.

Amendments and other papers. Amendments and other papers, except for written assertions pursuant to § 1.27(c)(2)(ii) of this part, filed in the application must be signed by:

(1) A registered patent attorney or patent agent of record appointed in compliance with § 1.32(b);

(2) A registered patent attorney or patent agent not of record who acts in a representative capacity under the provisions of § 1.34;

(3) An assignee as provided for under § 3.71(b) of this chapter; or

(4) All of the applicants (§ 1.41(b)) for patent, unless there is an assignee of the entire interest and such assignee has taken action in the application in accordance with § 3.71 of this chapter.

The petition lacks compliance with the provisions of 37 CFR 3.73(b). In this regard, 37 CFR 3.73(b) provides:

(1) In order to request or take action in a patent or trademark matter, the assignee must establish its ownership of the patent or trademark property of paragraph (a) of this section to the satisfaction of the Director. The establishment of ownership by the assignee may be combined with the paper that requests or takes the action. Ownership is established by submitting to the Office a signed statement identifying the assignee, accompanied by either:

(i) Documentary evidence of a chain of title from the original owner to the assignee (e.g., copy of an executed assignment * * * **For patent matters only, the submission of the documentary evidence must be accompanied by a statement affirming that the documentary evidence of the chain of title from the original owner to the assignee was or concurrently is being submitted for recordation pursuant to § 3.11;** or

(ii) **A statement specifying where documentary evidence of a chain of title from the original owner to the assignee is recorded in the assignment records of the Office (e.g., reel and frame number).**

(2) The submission establishing ownership must show that the person signing the submission is a person authorized to act on behalf of the assignee by:

(i) Including a statement that the person signing the submission is authorized to act on behalf of the assignee; or

(ii) Being signed by a person having apparent authority to sign on behalf of the assignee, *e.g.*, an officer of the assignee.

(c) For patent matters only:

> (1) Establishment of ownership by the assignee must be submitted prior to, or at the same time as, the paper requesting or taking action is submitted.
> (2) If the submission under this section is by an assignee of less than the entire right, title and interest, such assignee must indicate the extent (by percentage) of its ownership interest, or the Office may refuse to accept the submission as an establishment of ownership.

The statement under 37 CFR 3.73(b) fails to provide the chain of title from the applicants to the current assignee, as required above (note text in bold print). Further, there is no evidence that these documents were submitted to the USPTO Assignment Branch for recordation. If the assignments and/or change of name was submitted for recordation, then petitioner must provide the reel and frame number where the assignment was recorded. Petitioner may wish to use the Statement under 37 CFR 3.73(b) form appearing on the USPTO.gov website, a copy of which accompanies this decision for petitioner's convenience.

The statement under 37 CFR 3.73(b) also fails to state that Mr. King is empowered to act on behalf of the assignee. Petitioner's attention is also directed to MPEP Section 324(V), which states:

> The submission may be signed by a person in the organization having apparent authority to sign on behalf of the organization. 37 CFR 3.73(b)(2)(ii). An officer (chief executive officer, president, vice-president, secretary, or treasurer) is presumed to have authority to sign on behalf of the organization. The signature of the chairman of the board of directors is acceptable, but not the signature of an individual director. Modifications of these basic titles are acceptable, such as vice-president for sales, executive vice-president, assistant treasurer, vice-chairman of the board of directors * * * A person having a title (**administrator, general counsel) that does not clearly set forth that person as an officer of the assignee is not presumed to have authority to sign the submission on behalf of the assignee.

Petitioner is also advised that the statement of unintentional delay must be signed by a party having an interest in the application at the time the application became abandoned. Therefore, petitioner must state whether he was a party in interest during the period in which the issue fee could have been timely paid; i.e., from July 20, 2006 to October 20, 2006. If not, the statement of unintentional delay must be from the party having an interest in the application during the period at issue.

Further correspondence with respect to this matter should be addressed as follows:

By mail: Mail Stop PETITIONS
Commissioner for Patents
Post Office Box 1450
Alexandria, VA 22313-1450

By hand: Customer Service Window
Mail Stop Petitions
Randolph Building
401 Dulany Street
Alexandria, VA 22314

By fax: (703) 872-9306
ATTN: Office of Petitions

Any questions concerning this matter may be directed to the undersigned at (571) 272-3218.

Frances Hicks
Petitions Examiner
Office of Petitions

ATTACHMENT: Blank Statement under 37 CFR 3.73(b) Form and Privacy Act Statement

PTO/SB/96 (04-07)
Approved for use through 09/30/2007. OMB 0651-0031
U.S. Patent and Trademark Office; U.S. DEPARTMENT OF COMMERCE
Under the Paperwork Reduction Act of 1995, no persons are required to respond to a collection of information unless it displays a valid OMB control number.

STATEMENT UNDER 37 CFR 3.73(b)

Applicant/Patent Owner: _____

Application No./Patent No.: _____ Filed/Issue Date: _____

Entitled:

_____, a _____
(Name of Assignee) (Type of Assignee, e.g., corporation, partnership, university, government agency, etc.)

states that it is:

1. ☐ the assignee of the entire right, title, and interest; or

2. ☐ an assignee of less than the entire right, title and interest
(The extent (by percentage) of its ownership interest is _____%)

in the patent application/patent identified above by virtue of either:

A. ☐ An assignment from the inventor(s) of the patent application/patent identified above. The assignment was recorded in the United States Patent and Trademark Office at Reel _____, Frame _____, or for which a copy thereof is attached.

OR

B. ☐ A chain of title from the inventor(s), of the patent application/patent identified above, to the current assignee as follows:

1. From: _____ To: _____
The document was recorded in the United States Patent and Trademark Office at
Reel _____, Frame _____, or for which a copy thereof is attached.

2. From: _____ To: _____
The document was recorded in the United States Patent and Trademark Office at
Reel _____, Frame _____, or for which a copy thereof is attached.

3. From: _____ To: _____
The document was recorded in the United States Patent and Trademark Office at
Reel _____, Frame _____, or for which a copy thereof is attached.

☐ Additional documents in the chain of title are listed on a supplemental sheet.

☐ As required by 37 CFR 3.73(b)(1)(i), the documentary evidence of the chain of title from the original owner to the assignee was, or concurrently is being, submitted for recordation pursuant to 37 CFR 3.11.

[NOTE: A separate copy (*i.e.*, a true copy of the original assignment document(s)) must be submitted to Assignment Division in accordance with 37 CFR Part 3, to record the assignment in the records of the USPTO. See MPEP 302.08]

The undersigned (whose title is supplied below) is authorized to act on behalf of the assignee.

_____	_____
Signature	Date
_____	_____
Printed or Typed Name	Telephone Number
_____	
Title	

This collection of information is required by 37 CFR 3.73(b). The information is required to obtain or retain a benefit by the public which is to file (and by the USPTO to process) an application. Confidentiality is governed by 35 U.S.C. 122 and 37 CFR 1.11 and 1.14. This collection is estimated to take 12 minutes to complete, including gathering, preparing, and submitting the completed application form to the USPTO. Time will vary depending upon the individual case. Any comments on the amount of time you require to complete this form and/or suggestions for reducing this burden, should be sent to the Chief Information Officer, U.S. Patent and Trademark Office, U.S. Department of Commerce, P.O. Box 1450, Alexandria, VA 22313-1450. DO NOT SEND FEES OR COMPLETED FORMS TO THIS ADDRESS. SEND TO: **Commissioner for Patents, P.O. Box 1450, Alexandria, VA 22313-1450.**

If you need assistance in completing the form, call 1-800-PTO-9199 and select option 2.

Privacy Act Statement

The **Privacy Act of 1974 (P.L. 93-579)** requires that you be given certain information in connection with your submission of the attached form related to a patent application or patent. Accordingly, pursuant to the requirements of the Act, please be advised that: (1) the general authority for the collection of this information is 35 U.S.C. 2(b)(2); (2) furnishing of the information solicited is voluntary; and (3) the principal purpose for which the information is used by the U.S. Patent and Trademark Office is to process and/or examine your submission related to a patent application or patent. If you do not furnish the requested information, the U.S. Patent and Trademark Office may not be able to process and/or examine your submission, which may result in termination of proceedings or abandonment of the application or expiration of the patent.

The information provided by you in this form will be subject to the following routine uses:

1. The information on this form will be treated confidentially to the extent allowed under the Freedom of Information Act (5 U.S.C. 552) and the Privacy Act (5 U.S.C 552a). Records from this system of records may be disclosed to the Department of Justice to determine whether disclosure of these records is required by the Freedom of Information Act.
2. A record from this system of records may be disclosed, as a routine use, in the course of presenting evidence to a court, magistrate, or administrative tribunal, including disclosures to opposing counsel in the course of settlement negotiations.
3. A record in this system of records may be disclosed, as a routine use, to a Member of Congress submitting a request involving an individual, to whom the record pertains, when the individual has requested assistance from the Member with respect to the subject matter of the record.
4. A record in this system of records may be disclosed, as a routine use, to a contractor of the Agency having need for the information in order to perform a contract. Recipients of information shall be required to comply with the requirements of the Privacy Act of 1974, as amended, pursuant to 5 U.S.C. 552a(m).
5. A record related to an International Application filed under the Patent Cooperation Treaty in this system of records may be disclosed, as a routine use, to the International Bureau of the World Intellectual Property Organization, pursuant to the Patent Cooperation Treaty.
6. A record in this system of records may be disclosed, as a routine use, to another federal agency for purposes of National Security review (35 U.S.C. 181) and for review pursuant to the Atomic Energy Act (42 U.S.C. 218(c)).
7. A record from this system of records may be disclosed, as a routine use, to the Administrator, General Services, or his/her designee, during an inspection of records conducted by GSA as part of that agency's responsibility to recommend improvements in records management practices and programs, under authority of 44 U.S.C. 2904 and 2906. Such disclosure shall be made in accordance with the GSA regulations governing inspection of records for this purpose, and any other relevant (*i.e.*, GSA or Commerce) directive. Such disclosure shall not be used to make determinations about individuals.
8. A record from this system of records may be disclosed, as a routine use, to the public after either publication of the application pursuant to 35 U.S.C. 122(b) or issuance of a patent pursuant to 35 U.S.C. 151. Further, a record may be disclosed, subject to the limitations of 37 CFR 1.14, as a routine use, to the public if the record was filed in an application which became abandoned or in which the proceedings were terminated and which application is referenced by either a published application, an application open to public inspection or an issued patent.
9. A record from this system of records may be disclosed, as a routine use, to a Federal, State, or local law enforcement agency, if the USPTO becomes aware of a violation or potential violation of law or regulation.

UNITED STATES PATENT AND TRADEMARK OFFICE

Commissioner for Patents
United States Patent and Trademark Office
P.O. Box 1450
Alexandria, VA 22313-1450
www.uspto.gov

KENYON & KENYON LLP
1500 K STREET NW
SUITE 700
WASHINGTON, DC 20005

COPY MAILED

NOV 20 2007

OFFICE OF PETITIONS

In re Application of :
Steven Dwain Zimmermann et al :
Application No. 10/898,865 :
Filed: July 26, 2004 :
Attorney Docket No. 10760/85602 :

DECISION ON PETITION

This is a decision on the renewed petition under 37 CFR 1.137(b), filed June 18, 2007, to revive the above-identified application.

The petition is **GRANTED**.

This application became abandoned for failure to timely pay the issue and publication fees on or before October 20, 2006, as required by the Notice of Allowance and Fee(s) Due, mailed July 20, 2006. Accordingly, the date of abandonment of this application is October 21, 2006. A Notice of Abandonment was mailed on November 29, 2006.

The petition satisfies the requirements of 37 CFR 1.137(b) in that petitioner has supplied (1) the reply in the form of payment of the issue fee of $1,400 and the publication fee of $300, (2) the petition fee of $300, and (3) an adequate statement of unintentional delay. Accordingly, the issue and publication fees are accepted as being unintentionally delayed.

The rule at 37 CFR 1.137(b)(3) requires a statement that "the entire delay in filing the required reply from the due date for the reply until the filing of a grantable petition pursuant to 37 CFR 1.137(b) was unintentional." Since the statement appearing in the petition varies from the language required by 37 CFR 1.137(b)(3), the statement is being construed as the required statement. Petitioner must notify the Office if this is **not** a correct reading of the statement appearing in the petition.

Additionally, it is not apparent whether the person signing the statement of unintentional delay was in a position to have firsthand or direct knowledge of the facts and circumstances of

the delay at issue. Nevertheless, such statement is being treated as having been made as the result of a reasonable inquiry into the facts and circumstances of such delay. See 37 CFR 10.18(b) and Changes to Patent Practice and Procedure; Final Rule Notice, 62 Fed. Reg. 53131, 53178 (October 10, 1997), 1203 Off. Gaz. Pat. Office 63, 103 (October 21, 1997). In the event that such an inquiry has not been made, petitioner must make such an inquiry. If such inquiry results in the discovery that it is not correct that the entire delay in filing the required reply from the due date for the reply until the filing of a grantable petition pursuant to 37 CFR 1.137(b) was unintentional, petitioner must notify the Office.

Telephone inquiries concerning this decision should be directed to the undersigned at (571) 272-3218.

This application is being referred to Publishing Division for appropriate processing in accordance with this decision on petition.

Frances Hicks
Petitions Examiner
Office of Petitions

UNITED STATES PATENT AND TRADEMARK OFFICE

UNITED STATES DEPARTMENT OF COMMERCE
United States Patent and Trademark Office
Address: COMMISSIONER FOR PATENTS
P.O. Box 1450
Alexandria, Virginia 22313-1450
www.uspto.gov

THE WEBB LAW FIRM, P.C.
700 KOPPERS BUILDING
436 SEVENTH AVENUE
PITTSBURGH, PA 15219

Mail Date: 04/21/2010

Applicant	: Toshiharu Hirai	: DECISION ON REQUEST FOR
Patent Number	: 7575803	: RECALCULATION of PATENT
Issue Date	: 08/18/2009	: TERM ADJUSTMENT IN VIEW
Appliction No	: 10/898,894	: OF WYETH AND NOTICE OF INTENT TO
Filed	: 07/26/2004	: ISSUE CERTIFICATE OF CORRECTION
		:

The Request for Recalculation is **GRANTED** to the extent indicated.

The patent term adjustment has been determined to be **871** days. The USPTO will *sua sponte* issue a certificate of correction reflecting the amount of PTA days determined by the recalculation.

Prior to the issuance of the certificate of correction, the USPTO will afford patentee an opportunity to be heard and request reconsideration. Accordingly, patentee has **one month or thirty (30) days**, whichever is longer, to file a request for reconsideration of this patent term adjustment calculation. See 35 U.S.C. 154(b)(3)(B)(ii) and 37 CFR 1.322(a)(4). No extensions of time will be granted under 37 CFR 1.136.

Patentee should use document code PET.OP if electronically filing a request for reconsideration of this patent term adjustment calculation. The patentee must also include the information required by 37 CFR 1.705(b)(2) and the fee required by 37 CFR 1.18(e). If patentee does not file a timely request for reconsideration of this patent term adjustment calculation including the information required by 37 CFR 1.705(b)(2) and the fee required by 37 CFR 1.18(e), the USPTO will issue a certificate of correction reflecting the PTA determination noted above.

Patentee should be aware that in order to preserve the right to review in the United States District Court for the District of Columbia of the USPTO patent term adjustment determination, patentee must ensure that he or she also take the steps required under 35 U.S.C. 154(b)(4)(A) in a timely manner. Nothing in the request for recalculation should be construed as providing an alternative time frame for commencing a civil action under 35 U.S.C. 154(b)(4)(A).

Any questions concerning this decision should be directed to the Office of Patent Legal Administration at 571-272-7702.

UNITED STATES PATENT AND TRADEMARK OFFICE

COMMISSIONER FOR PATENTS
UNITED STATES PATENT AND TRADEMARK OFFICE
P.O. BOX 1450
ALEXANDRIA, VA 22313-1450
www.uspto.gov

LEYDIG VOIT & MAYER, LTD
TWO PRUDENTIAL PLAZA, SUITE 4900
180 NORTH STETSON AVENUE
CHICAGO, IL 60601-6780

COPY MAILED

AUG 0 9 2005

OFFICE OF PETITIONS

In re Application of :
King-Spengler : DECISION ON PETITION
Application No. 10/898,920 :
Filed: July 26, 2004 :
Docket No.: 229795 :

This is a decision on the "PETITION PURSUANT TO 37 C.F.R. § 1.182 TO CHANGE THE NAME OF AN INVENTOR," filed May 4, 2005.

Petitioner herein requests to change the name of inventor S. Thomas King-Spengler to STEPHEN THOMAS KING. The petition is accompanied by a copy of a Judgment for Change of Name issued by the Circuit Court of the State of Illinois, an application data sheet, and the petition fee.

In cases where an inventor's name has been changed after the application has been filed and the inventor desires to change his or her name on the application, he or she must submit a petition under 37 CFR 1.182. The petition must include the appropriate petition fee and an affidavit signed with both names and setting forth the procedure whereby the change of name was effected, or a certified copy of the court order. *See*, MPEP 605.04(c).

The instant petition lacks the required inventor's affidavit and/or a certified copy of the Court order.

Accordingly, the petition is hereby **DISMISSED**.

Any petition for reconsideration of this decision must be submitted within **TWO (2) MONTHS** of the mail date of this decision and should be styled "Request for Reconsider4ation under 37 CFR 1.182." Petitions for extensions of time under 37 CFR 1.136 apply.

Further correspondence with respect to this matter should be addressed as follows:

By mail: **Mail Stop Petition**

Commissioner for Patents
P.O. Box 1450
Alexandria, VA 22313-1450

By facsimile: (571) 273-8300

By hand: U.S. Patent and Trademark Office
Customer Service Window
Mail Stop Petition
Randolph Building
401 Dulany Street
Alexandria, VA 22314

This application is being returned to the Office of Initial Patent Examination for further processing.

Telephone inquiries concerning this matter may be directed to the undersigned at (571) 272-3205.

Alesia M. Brown
Petitions Attorney
Office of Petitions

UNITED STATES PATENT AND TRADEMARK OFFICE

COMMISSIONER FOR PATENTS
UNITED STATES PATENT AND TRADEMARK OFFICE
P.O. BOX 1450
ALEXANDRIA, VA 22313-1450
www.uspto.gov

LEYDIG VOIT & MAYER, LTD
TWO PRUDENTIAL PLAZA, SUITE 4900
180 NORTH STETSON AVENUE
CHICAGO, IL 60601-6780

COPY MAILED
JAN 13 2006
OFFICE OF PETITIONS

In re Application of :
King : DECISION ON PETITION
Application No. 10/898,920 :
Filed: July 26, 2004 :
Docket No.: 229795 :

This decision is in response to the renewed petition under 37 C.F.R. § 1.182 filed October 6, 2005.

The petition is **GRANTED**.

Petitioners herein request the instant change of name: from THOMAS KING-SPENGLER to STEPHEN THOMAS KING.

In cases where an inventor's name has been changed after the application has been filed and the inventor desires to change his or her name on the application, he or she must submit a petition under 37 CFR 1.182. The petition must include the appropriate petition fee and an affidavit signed with both names and setting forth the procedure whereby the change of name was effected, or a certified copy of the court order. *See*, MPEP 605.04(c).

The petition includes the required petition fee and a certificate copy of the court order effectuating the change of name. Accordingly, the above-identified application complies with current Office procedures to effect a correction of inventor name.

This application is being forwarded to Technology Center 1600 for further processing.

Telephone inquiries concerning this matter may be directed to the undersigned at (571) 272-3205.

Alesia M. Brown
Petitions Attorney
Office of Petitions

UNITED STATES PATENT AND TRADEMARK OFFICE

Commissioner for Patents
United States Patent and Trademark Office
P.O. Box 1450
Alexandria, VA 22313-1450
www.uspto.gov

FINNEGAN, HENDERSON, FARABOW,
GARRETT & DUNNER LLP
901 NEW YORK AVENUE, NW
WASHINGTON DC 20001-4413

MAILED

JUL 16 2009

OFFICE OF PETITIONS

In re Patent No. 7,454,701	:
Astrid Graeber	: DECISION DISMISSING
Issue Date: 11/18/2008	: APPLICATION FOR
Application No. 10/898,921	: PATENT TERM ADJUSTMENT
Filed: 07/27/2004	: UNDER 37 CFR 1.705(d)
Attorney Docket No.	:
07781.0165-00	:

This is a decision on the "APPLICATION FOR PATENT TERM ADJUSTMENT – POST GRANT," filed November 26, 2008, requesting that the patent term adjustment determination for the above-identified patent be changed from 367 days to 540 days. The application is properly treated under 37 CFR §1.705(d).

The application for patent term adjustment is DISMISSED.

On November 18, 2008, the above-identified application matured into US Patent No. 7,454,701, with a patent term adjustment of 367 days. This application for patent term adjustment was timely filed within two months of the issue date of the patent. See 37 CFR 1.705(d).

Patentees request recalculation of the patent term adjustment based on the decision in Wyeth v. Dudas, 580 F. Supp. 2d 138, 88 U.S.P.Q. 2d 1538 (D.D.C. 2008). Patentees assert that pursuant to Wyeth, a PTO delay under 35 U.S.C. 154(b)(1)(A) overlaps with a delay under 35 U.S.C. 154(b)(1)(B) only if the delays occur on the same day. Patentees assert entitlement to the sum of the period of adjustment due to the Three Year Delay by the Office, pursuant to 37 CFR 1.703(b), of 173 days and the period of adjustment due to examination delay, pursuant to 37 CFR 1.702(a), of 367 days.

The 173-day period is calculated based on the application having been filed under 35 U.S.C. 111(a) on July 27, 2004, and a request for continued examination (RCE) having been filed in this application on January 16, 2008, three years and 173 days later. Patentees assert that in addition to this 173-day period, they are entitled to a period of adjustment due to examination delay pursuant to 37 CFR 1.702(a) totalling 367 days. This 367-day period is the result of a period of delay of 350 days for the failure by the Office to mail at least one of a notification under 35

U.S.C. 132 not later than fourteen months after the date on which application was filed under 35 U.S.C. 111(a), pursuant to 37 CFR 1.702(a)(1), and a period of delay of 17 days for the failure of the Office to respond to a reply under 35 U.S.C. 132 not later than four months after the date on which the reply was filed or the appeal was taken, pursuant to 37 CFR 1.702(a)(2).

Under 37 CFR 1.703(f), patentees are entitled to a period of patent term adjustment equal to the period of delays based on the grounds set forth in 37 CFR 1.702 reduced by the period of time equal to the period of time during which patentees failed to engage in reasonable efforts to conclude prosecution pursuant to 37 CFR 1.704. In other words, patentees are entitled to the period of Office delay reduced by the period of applicant delay. There is no period of reduction for applicant delay.

Patentees do not dispute that the total period of Office delay is the sum of the period of Three Years Delay (173 days) and the period of Examination Delay (367 days) to the extent that these periods of delay are not overlapping. However, in effect, patentees contend that no portion of the Three Year Delay period overlaps with the period of examination delay. Accordingly, patentees submit that the total period of adjustment for Office delay is 540 days, which is the sum of the period of Three Year Delay (173 days) and the period of Examination Delay (367 days), reduced by the period of overlap (0 days). As such, patentees assert entitlement to a patent term adjustment of 540 days (173 + 367 reduced by 0 overlap – 0 (applicant delay)).

The Office agrees that as of the filing of the RCE on January 16, 2008, the application was pending three years and 173 days after its filing date. The Office agrees that the action detailed above was not taken within the specified time frame, and thus, the entry of a period of adjustment of 367 days is correct. At issue is whether patentees should accrue 173 days of patent term adjustment for the Office taking in excess of three years to issue the patent, as well as 367 days for Office failure to take a certain action within a specified time frame (or examination delay).

The Office contends, however, that 173 days overlap. Patentees' calculation of the period of overlap is inconsistent with the Office's interpretation of this provision. 35 U.S.C. 154(b)(2)(A) limits the adjustment of patent term, as follows:

> To the extent that the periods of delay attributable to grounds specified in paragraph (1) overlap, the period of any adjustment granted under this subsection shall not exceed the actual number of days the issuance of the
> patent was delayed.

Likewise, 35 CFR 1.703(f) provides that:

> To the extent that periods of delay attributable to the grounds specified in § 1.702 overlap, the period of adjustment granted under this section shall not exceed the actual number of days the issuance of the patent was
> delayed.

As explained in *Explanation of 37 CFR 1.703(f) and of the United States Patent and Trademark Office Interpretation of 35 U.S.C. 154(b)(2)(A)*, 69 Fed. Reg. 34283 (June 21, 2004), the Office interprets 35 U.S.C. 154(b)(2)(A) as permitting either patent term adjustment under 35 U.S.C. 154(b)(1)(A)(i)-(iv), or patent term adjustment under 35 U.S.C. 154(b)(1)(B), but not as permitting patent term adjustment under both 35 U.S.C. 154(b)(1)(A)(i)-(iv) and 154(b)(1)(B). Accordingly, the Office implements the overlap provision as follows:

> If an application is entitled to an adjustment under 35 U.S.C. 154(b)(1)(B), the entire period during which the application was pending (except for periods excluded under 35 U.S.C. 154(b)(1)(B)(i)-(iii)), and not just the period beginning three years after the actual filing date of the application, is the period of delay under 35 U.S.C. 154(b)(1)(B) in determining whether periods of delay overlap under 35 U.S.C. 154(b)(2)(A). Thus, any days of delay for Office issuance of the patent more than 3 years after the filing date of the application, which overlap with the days of patent term adjustment accorded prior to the issuance of the patent will not result in any additional patent term adjustment. See 35 U.S.C. 154(b)(1)(B), 35 U.S.C. 154(b)(2)(A), and 37 CFR § 1.703(f). See *Changes to Implement Patent Term Adjustment Under Twenty Year Term; Final Rule*, 65 Fed. Reg. 56366 (Sept. 18, 2000). See also *Revision of Patent Term Extension and Patent Term Adjustment Provisions; Final Rule*, 69 Fed. Reg. 21704 (April 22, 2004), 1282 Off. Gaz. Pat. Office 100 (May 18, 2004). See also *Explanation of 37 CFR 1.703(f) and of the United States Patent and Trademark Office Interpretation of 35 U.S.C. 154(b)(2)(A),* 69 Fed. Reg. 34283 (June 21, 2004).

The current wording of § 1.703(f) was revised in response to the misinterpretation of this provision by a number of Patentees. The rule was slightly revised to more closely track the corresponding language of 35 U.S.C. 154(b)(2)(A). The relevant portion differs only to the extent that the statute refers back to provisions of the statute whereas the rule refers back to sections of the rule. This was not a substantive change to the rule nor did it reflect a change of the Office's interpretation of 35 U.S.C. 154(b)(2)(A). As stated in the *Explanation of 37 CFR 1.703(f) and of the United States Patent and Trademark Office Interpretation of 35 U.S.C. 154(b)(2)(A)*, the Office has consistently taken the position that if an application is entitled to an adjustment under the three-year pendency provision of 35 U.S.C. 154(b)(1)(B), the entire period during which the application was pending before the Office (except for periods excluded under 35 U.S.C. 154(b)(1)(B)(i)-(iii)), and not just the period beginning three years after the actual filing date of the application, is the relevant period under 35 U.S.C. 154(b)(1)(B) in determining whether periods of delay "overlap" under 35 U.S.C. 154(b)(2)(A).

This interpretation is consistent with the statute. Taken together the statute and rule provide that to the extent that periods of delay attributable to grounds specified in 35 U.S.C. 154(b)(1) and in corresponding § 1.702 overlap, the period of adjustment granted shall not exceed the actual number of days the issuance of the patent was delayed. The grounds specified in these sections cover the A) guarantee of prompt Patent and Trademark Office responses, B) guarantee of no more than 3-year application pendency, and C) guarantee or adjustments for delays due to

interference, secrecy orders and appeals. A section by section analysis of 35 U.S.C. 154(b)(2)(A) specifically provides that:

> Section 4402 imposes limitations on restoration of term. In general, pursuant to [35 U.S.C.] 154(b)(2)(A)-(C), total adjustments granted for restorations under [35 U.S.C. 154](b)(1) are reduced as follows: (1) To the extent that there are multiple grounds for extending the term of a patent that may exist simultaneously (e.g., delay due to a secrecy order under [35 U.S.C.] 181 and administrative delay under [35 U.S.C.] 154(b)(1)(A)), the term should not be extended for each ground of delay but only for the actual number of days that the issuance of a patent was delayed; See 145 Cong. Rec. S14,718[1]

As such, the period for over three-year pendency does not overlap only to the extent that the actual dates in the period beginning three years after the date on which the application was filed overlap with the actual dates in the periods for failure of the Office to take action within specified time frames. In other words, consideration of the overlap does not begin three years after the filing date of the application.

In this instance, the relevant period under 35 U.S.C. 154(b)(1)(B) in determining whether periods of delay "overlap" under 35 U.S.C. 154(b)(2)(A) is the entire period during which the application was pending before the Office, July 27, 2004, as terminated by the filing of the RCE on January 16, 2008. Prior to the issuance of the patent, 367 days of patent term adjustment were accorded for the Office failing to respond within a specified time frame during the pendency of the application. All of the 173 days for Office delay in issuing the patent overlap with the 367 days of Office delay. During that time, the issuance of the patent was delayed by 367 days, not 367 days + 173 days. The Office took 14 months and 350 days to issue a first Office action, and 17 days respond to Applicant's reply to a Restriction Requirement. Otherwise, the Office took all actions set forth in 37 CFR 1.702(a) within the prescribed timeframes. Nonetheless, given the initial 367 days of Office delay, and the time allowed within the time frames for processing and examination, as of the filing date of the RCE, the application was pending three years and 367 days. The Office did not delay 367 days and then an additional 173 days. Accordingly, 367 days of patent term adjustment (not 367 days and 173 days) was properly entered because the period of delay of 173 days attributable to the delay in the issuance of the patent overlaps with the adjustment of 367 days attributable to grounds specified in § 1.702(a).

In view thereof, no adjustment to the patent term will be made.

The Office acknowledges submission of the $200.00 fee set forth in 37 CFR 1.18(e). No additional fees are required.

---

[1] The AIPA is title IV of the Intellectual Property and Communications Omnibus Reform Act of 1999 (S. 1948), which was incorporated and enacted as law as part of Pub. L. 106-113. The Conference Report for H.R. 3194, 106th Cong. 1st Sess. (1999), which resulted in Pub. L. 106-113, does not contain any discussion (other than the incorporated language) of S. 1948. A section-by-section analysis of S. 1948, however, was printed in the Congressional Record at the request of Senator Lott, See 145 Cong. Rec. S14,708-26 (1999)(daily ed. Nov. 17, 1999).

Telephone inquiries specific to this matter should be directed to Attorney Derek Woods at (571) 272-3232.

Alesia Brown
Petitions Attorney
Office of Petitions
Office of the Deputy Commissioner
for Patent Examination Policy

UNITED STATES PATENT AND TRADEMARK OFFICE

UNITED STATES DEPARTMENT OF COMMERCE
United States Patent and Trademark Office
Address: COMMISSIONER FOR PATENTS
P.O. Box 1450
Alexandria, Virginia 22313-1450
www.uspto.gov

INTELLECTUAL PROPERTY MANAGEMENT
BOEING MANAGEMENT COMPANY
P.O. BOX 2515
MAIL CODE 110-SD54
SEAL BEACH, CA 90740-1515

Mail Date: 04/20/2010

Applicant	: Paul Z. Thunemann	: DECISION ON REQUEST FOR
Patent Number	: 7606688	: RECALCULATION of PATENT
Issue Date	: 10/20/2009	: TERM ADJUSTMENT IN VIEW
Appliction No	: 10/898,931	: OF WYETH AND NOTICE OF INTENT TO
Filed	: 07/27/2004	: ISSUE CERTIFICATE OF CORRECTION
		:

The Request for Recalculation is **GRANTED** to the extent indicated.

The patent term adjustment has been determined to be **643** days. The USPTO will *sua sponte* issue a certificate of correction reflecting the amount of PTA days determined by the recalculation.

Prior to the issuance of the certificate of correction, the USPTO will afford patentee an opportunity to be heard and request reconsideration. Accordingly, patentee has **one month or thirty (30) days**, whichever is longer, to file a request for reconsideration of this patent term adjustment calculation. See 35 U.S.C. 154(b)(3)(B)(ii) and 37 CFR 1.322(a)(4). No extensions of time will be granted under 37 CFR 1.136.

Patentee should use document code PET.OP if electronically filing a request for reconsideration of this patent term adjustment calculation. The patentee must also include the information required by 37 CFR 1.705(b)(2) and the fee required by 37 CFR 1.18(e). If patentee does not file a timely request for reconsideration of this patent term adjustment calculation including the information required by 37 CFR 1.705(b)(2) and the fee required by 37 CFR 1.18(e), the USPTO will issue a certificate of correction reflecting the PTA determination noted above.

Patentee should be aware that in order to preserve the right to review in the United States District Court for the District of Columbia of the USPTO patent term adjustment determination, patentee must ensure that he or she also take the steps required under 35 U.S.C. 154(b)(4)(A) in a timely manner. Nothing in the request for recalculation should be construed as providing an alternative time frame for commencing a civil action under 35 U.S.C. 154(b)(4)(A).

Any questions concerning this decision should be directed to the Office of Patent Legal Administration at 571-272-7702.

UNITED STATES PATENT AND TRADEMARK OFFICE

Commissioner for Patents
United States Patent and Trademark Office
P.O. Box 1450
Alexandria, VA 22313-1450
www.uspto.gov

OGILVY RENAULT LLP
1981 MCGILL COLLEGE AVENUE
SUITE 1600
MONTREAL QC H3A2Y-3 CA CANADA

COPY MAILED

NOV 0 3 2006

OFFICE OF PETITIONS

In re Application of	:	
KUPFERBERG	:	
Application No. 10/898,947	:	DECISION ON PETITION
Filed: July 27, 2004	:	TO WITHDRAW
Attorney Docket No. 12115-11US RM/NJP/ni	:	FROM RECORD
	:	

This is a decision on the Request to Withdraw as attorney or agent of record under 37 C.F.R. § 1.36(b), filed July 27, 2006.

The request is **NOT APPROVED**.

A grantable request to withdraw as attorney/agent of record must be signed by every attorney/agent seeking to withdraw or contain a clear indication that one attorney is signing on behalf of another/others. A request to withdraw will not be approved unless at least 30 (thirty) days would remain between the date of approval and the later of the expiration date of a time to file a response or the expiration date of the maximum time period which can be extended under 37 C.F.R. § 1.136(a).

The request cannot be approved because no reasons for withdrawal have been provided. The Office cannot, at this time, determine whether practitioner's request is one of the mandatory or permissive reasons enumerated in 37 CFR 10.40. Any subsequent requests must include reasons for withdrawal. Please note that there is a space provided for on PTO/SB/83 (Request to Withdraw as Attorney or Agent) to supply practitioner's reasons.

All future communications from the Office will continue to be directed to the above-listed address until otherwise notified by applicant.

There is no outstanding Office action that requires a reply from the applicant.

Telephone inquiries concerning this decision should be directed to Patricia Volpe at 571-272-6825.

Patricia Volpe
Petitions Examiner
Office of Petitions

cc: Minel Kupferberg
c/o M.K. PLASTICS CORPORATION
4955 De Courtrai Avenue
Montreal Quebec H3W 1A6
CANADA

UNITED STATES PATENT AND TRADEMARK OFFICE

Commissioner for Patents
United States Patent and Trademark Office
P.O. Box 1450
Alexandria, VA 22313-1450
www.uspto.gov

Ogilvy Renault LLP
1981 McGill College Avenue
Suite 1600
Montreal, QC H3A2Y3
Canada

COPY MAILED

JUN 1 8 2007

OFFICE OF PETITIONS

In re Application of	:	
Minel Kupferberg	:	
Application No. 10/898,947	:	DECISION ON PETITION
Filed: July 27, 2004	:	TO WITHDRAW
Attorney Docket No. 12115-11US RM/N	:	FROM RECORD
	:	

This is a decision on the Request to Withdraw as attorney or agent of record under 37 C.F.R. § 1.36(b), filed December 1, 2006.

The request is **NOT APPROVED** as moot.

A review of the file record indicates that the power of attorney to Ogilvy Renault LLP has been revoked by the applicant of the patent application on December 15, 2006. Accordingly, the request to withdraw under 37 C.F.R. § 1.36(b) is moot.

All future communications from the Office will continue to be directed to the below-listed address until otherwise notified by applicant.

Telephone inquires concerning this decision should be directed to Terri Williams at 571-272-2991.

Terri Williams
Petitions Examiner
Office of Petitions

cc: **Hoffman Wasson & Gitler, P.C.**
Crystal Center 2, Suite 522
2461 South Clark Street
Arlington, VA 22202-3843

UNITED STATES PATENT AND TRADEMARK OFFICE

COMMISSIONER FOR PATENTS
UNITED STATES PATENT AND TRADEMARK OFFICE
P.O. BOX 1450
ALEXANDRIA, VA 22313-1450
www.uspto.gov

Steven W. Weinrieb
Law Offices of Steven W. Weinrieb
8717 Cold Spring Road
Potomac, MD 20814

COPY MAILED

SEP 10 2008

OFFICE OF PETITIONS

In re Application of
Frank Valenzano et al.
Application No. 10/898,957
Filed: July 27, 2004
Attorney Docket No. 71-857-1

DECISION ON PETITION

This is a decision on the petition under 37 CFR 1.137(b), filed June 2, 2008, to revive the above-identified application.

The petition is **GRANTED**.

This application became abandoned for failure to timely pay the issue and publication fees on or before March 5, 2007, as required by the Notice of Allowance and Fee(s) Due, mailed December 5, 2007. Accordingly, the date of abandonment of this application is March 6, 2007. A Notice of Abandonment was mailed on April 5, 2007.

The petition satisfies the requirements of 37 CFR 1.137(b) in that petitioner has supplied (1) the reply in the form of payment of the issue fee of $1440 and the publication fee of $300, (2) the petition fee of $1540, and (3) a proper statement of unintentional delay. Accordingly, the issue and publication fees are accepted as being unintentionally delayed.

37 CFR 1.137(b)(3) requires a statement that the entire delay in filing the required reply from the due date for the reply until the filing of a grantable petition pursuant to 37 CFR 1.137(b) was unintentional. Since the statement contained in the petition varies from the language required by 37 CFR 1.137(b)(3), the statement contained in the petition is being construed as the statement required by 37 CFR 1.137(b)(3). Petitioner must notify the Office if this is **not** a correct interpretation of the statement contained in the petition.

Telephone inquiries concerning this decision should be directed to Kimberly Inabinet at (571) 272-4618.

This application is being referred to the Office of Data Management for further processing into a patent.

Carl Friedman
Petitions Examiner
Office of Petitions

UNITED STATES PATENT AND TRADEMARK OFFICE

Commissioner for Patents
United States Patent and Trademark Office
P.O. Box 1450
Alexandria, VA 22313-1450
www.uspto.gov

SUGHRUE MION PLLC
2100 PENNSYLVANIA AVENUE NW, SUITE 800
WASHINGTON, DC 20037

COPY MAILED

NOV 23 2005

OFFICE OF PETITIONS

In re Application of	:
Kazunari Kaga et al	:
Application No. 10/898,971	: DECISION GRANTING PETITION
Filed: July 27, 2004	: UNDER 37 CFR 1.313(c)(2)
Attorney Docket No. Q81908	:

This is a decision on the petition, filed November 22, 2005, under 37 CFR 1.313(c)(2) to withdraw the above-identified application from issue after payment of the issue fee.

The petition is **GRANTED**.

The above-identified application is withdrawn from issue for consideration of a submission under 37 CFR 1.114 (request for continued examination). See 37 CFR 1.313(c)(2).

Petitioner is advised that the issue fee paid on October 11, 2005 in the above-identified application cannot be refunded. If, however, the above-identified application is again allowed, petitioner may request that it be applied towards the issue fee required by the new Notice of Allowance.[1]

Telephone inquiries should be directed to the undersigned at (571) 272-3218.

This matter is being referred to Technology Center AU 1621 for processing of the request for continued examination under 37 CFR 1.114 and for consideration of the Information Disclosure Statement.

Frances Hicks
Petitions Examiner
Office of Petitions

---

[1] *The request to apply the issue fee to the new Notice may be satisfied by completing and returning the new Issue Fee Transmittal Form PTOL-85(b) (along with any balance due at the time of payment), which includes the following language thereon: "Commissioner for Patents is requested to apply the Issue Fee and Publication Fee (if any) or re-apply any previously paid issue fee to the application identified above." Petitioner is advised that, whether a fee is indicated as being due or not, the Issue Fee Transmittal Form* **must** *be completed and timely submitted to avoid abandonment. Note the language in bold text on the first page of the Notice of Allowance and Fee(s) Due (PTOL-85).*

UNITED STATES PATENT AND TRADEMARK OFFICE

COMMISSIONER FOR PATENTS
UNITED STATES PATENT AND TRADEMARK OFFICE
P.O. BOX 1450
ALEXANDRIA, VA 22313-1450
www.uspto.gov

ANTONELLI, TERRY, STOUT & KRAUS, LLP
1300 NORTH SEVENTEENTH STREET
SUITE 1800
ARLINGTON, VA 22209-3873

MAIL

MAY 0 4 2005

DIRECTOR OFFICE
TECHNOLOGY CENTER 2100

In re Application of SAIKA	:	
Application No.: 10/898,974	:	DECISION ON PETITION
Filing Date: July 27, 2004	:	FOR ACCELERATED
For: BACKUP SYSTEM, BACKUP	:	EXAMINATION UNDER
METHOD, AND PROGRAM	:	M.P.E.P. §708.02(VIII)
THEREFOR	:	

This is a decision on the petition filed April 4, 2005 under 37 CFR §1.102(d) and M.P.E.P. §708.02(VIII): Accelerated Examination, to make the above-identified application special.

The petition is **GRANTED**.

M.P.E.P. §708.02, Section VIII, which sets out the prerequisites for a grantable petition for Accelerated Examination under 37 CFR §1.102(d), states in relevant part:

> A new application (one which has not received any examination by the examiner) may be granted special status provided that applicant (and this term includes applicant's attorney or agent) complies with each of the following items:
>
> (A) Submits a petition to make special accompanied by the fee set forth in 37 CFR 1.17(h);
>
> (B) Presents all claims directed to a single invention, or if the Office determines that all the claims presented are not obviously directed to a single invention, will make an election without traverse as a prerequisite to the grant of special status. The election may be made by applicant at the time of filing the petition for special status. Should applicant fail to include an election with the original papers or petition and the Office determines that a requirement should be made, the established telephone restriction practice will be followed. If otherwise proper, examination on the merits will proceed on claims drawn to the elected invention. If applicant refuses to make an election without traverse, the application will not be further examined at that time. The petition will be denied on the ground that the claims are not directed to a single invention, and the application will await action in its regular turn. Divisional applications directed to the nonelected inventions will not automatically be given special status based on papers filed with the petition in the parent application. Each such application must meet on its own all requirements for the new special status;

(C) Submits a statement(s) that a pre-examination search was made, listing the field of search by class and subclass, publication, Chemical Abstracts, foreign patents, etc. >The pre-examination search must be directed to the invention as claimed in the application for which special status is requested.< A search made by a foreign patent office satisfies this requirement >if the claims in the corresponding foreign application are of the same or similar scope to the claims in the U.S. application for which special status is requested<;

(D) Submits one copy each of the references deemed most closely related to the subject matter encompassed by the claims if said references are not already of record; and

(E) Submits a detailed discussion of the references, which discussion points out, with the particularity required by 37 CFR 1.111 (b) and (c), how the claimed subject matter is patentable over the references.

Because the petition filed April 4, 2005 meets the criteria set forth above, the petition to make special is **GRANTED**.

The application file is being forwarded to the Examiner for accelerated examination in accordance with M.P.E.P. §708.02, Section VIII. If the application is subsequently allowed, it will be given priority for printing. See M.P.E.P. §1309.

Pinchus M. Laufer

Pinchus M. Laufer
Special Programs Examiner
Technology Center 2100
Computer Architecture, Software, and Information Security
571-272-3599

UNITED STATES PATENT AND TRADEMARK OFFICE

COMMISSIONER FOR PATENTS
UNITED STATES PATENT AND TRADEMARK OFFICE
P.O. BOX 1450
ALEXANDRIA, VA 22313-1450
www.uspto.gov

SUGHRUE MION, PLLC
2100 PENNSYLVANIA AVENUE, N.W.
SUITE 800
WASHINGTON, DC 20037

COPY MAILED
FEB 14 2005
OFFICE OF PETITIONS

In re Application of:	:	
Inoue et al.	:	
Application No. 10/898,992	:	DECISION DISMISSING
Filed: July 27, 2004	:	PETITION UNDER
Title of Invention:	:	37 CFR 1.47(a)
APPARATUS AND METHOD FOR DISCHARGE	:	
SURFACE TREATMENT	:	

This is in response to the Petition Under 37 CFR 1.47(a), to allow the other inventor to proceed with the application on behalf of himself or herself and the nonsigning inventor.

The petition is **dismissed**.

Rule 47 applicant is given TWO (2) MONTHS from the mailing date of this decision to reply, correcting the below-noted deficiencies. Any reply should be entitled "Request for Reconsideration of Petition Under 37 CFR 1.47(a)"; should only address the deficiencies noted below, except that the reply may include an oath or declaration executed by the non-signing inventor, AND BE ADDRESSED TO petitions Attorney Derek L. Woods. Failure to respond will result in abandonment of the application. Any extensions of time will be governed by 37 CFR 1.136(a).

The above-identified application was filed on July 27, 2004, without, a fully executed oath or declaration. The Office mailed a Notice to File Missing Parts of Nonprovisional Application (hereinafter "Notice"), on September 22, 2004, requiring *inter alia*, a properly signed oath or declaration.

In response to the Notice, Applicant files the instant petition wherein Applicant assertion that the nonsigning inventor cannot be found or reached. This assertion is supported by a statement from Akihiro Goto, wherein Mr. Goto avers that the nonsigning inventor had retired from the company and no longer resided at his last known address, the company's dormitory.

Applicable Law

A grantable petition under 37 CFR 1.47(a) requires: (1) proof that the non-signing inventor cannot be reached or refuses to sign the oath or declaration after having been presented with the application papers (specification, claims and drawings); (2) an acceptable oath or declaration in compliance with 35 U.S.C. §§ 115 and 116; (3) the petition fee; and (4) a statement of the last known address of the non-signing inventor. Applicant lacks item (1) set forth above.

As to item (1), if an inventor is unavailable (cannot be reached), while it is not required that the application be mailed, Petitioner must establish the exercise of diligent effort in trying to find or reach the nonsigning inventor. A statement of facts should be submitted that fully describes the exact facts which are relied on to establish that a *diligent effort* was made to locate the inventor. (Emphasis supplied). See, MPEP § 409.03(d). At the very least, an Internet search, or a search of telephone directories should be undertaken of the regions where it is suspected the non-signing inventor may reside. Copies of the results of such searches must be referred to in any renewed petition. It is important that the forthcoming communication contain statements of fact as opposed to conclusions.

Further correspondence with respect to this matter should be addressed as follows:

By mail: Commissioner for Patents
PO Box 1450
Alexandria, VA 22313-1450

By FAX: (703) 872-9306
Attn: Office of Petitions

By hand: Customer Service Window
Randolph Building
401 Dulany Street
Alexandria, VA 22314

Telephone inquiries concerning this decision should be directed to the undersigned at (571) 272-3232.

Derek L. Woods
Attorney/Advisor
Office of Petitions

UNITED STATES PATENT AND TRADEMARK OFFICE

COMMISSIONER FOR PATENTS
UNITED STATES PATENT AND TRADEMARK OFFICE
P.O. BOX 1450
ALEXANDRIA, VA 22313-1450
www.uspto.gov

SUGHRUE MION, PLLC
2100 PENNSYLVANIA AVENUE, N.W.
SUITE 800
WASHINGTON, DC 20037

COPY MAILED

JUL 01 2005

OFFICE OF PETITIONS

In re Application of:	:	
Inoue et al.	:	
Application No. 10/898,992	:	DECISION NOTING
Filed: July 27, 2004	:	JOINDER OF
Title of Invention:	:	INVENTOR
APPARATUS AND METHOD FOR DISCHARGE	:	
SURFACE TREATMENT	:	

This is in response to the Request for Reconsideration Petition, under 37 CFR 1.47(a), filed June 14, 2005, noting the joinder of the inventor. The two (2) month extension-of-time is noted.

In view of the joinder of the inventor, further consideration under 37 CFR 1.47(a) is not necessary and the Reconsideration of Petition is considered to be moot. This application does not have any Rule 1.47(a) status and no such status should appear on the file wrapper. This application need not be returned to this Office for further consideration under 37 CFR 1.47(a).

The Declaration has been entered and made of record.

This application is being referred to Technology Center Art Unit 1734 for continued examination in due course.

Telephone inquiries related to this decision may be directed to the undersigned at (571) 272-3232.

Derek L. Woods
Petitions Attorney
Office of Petitions

UNITED STATES PATENT AND TRADEMARK OFFICE

UNITED STATES DEPARTMENT OF COMMERCE
United States Patent and Trademark Office
Address: COMMISSIONER FOR PATENTS
P.O. Box 1450
Alexandria, Virginia 22313-1450
www.uspto.gov

BORDEN LADNER GERVAIS LLP
Anne Kinsman
WORLD EXCHANGE PLAZA
100 QUEEN STREET SUITE 1100
OTTAWA, ON K1P 1J9
CANADA

Mail Date: 04/23/2010

Applicant	: Yongxin Zhou	: DECISION ON REQUEST FOR
Patent Number	: 7634091	: RECALCULATION of PATENT
Issue Date	: 12/15/2009	: TERM ADJUSTMENT IN VIEW
Appliction No	: 10/899,012	: OF WYETH AND NOTICE OF INTENT TO
Filed	: 07/27/2004	: ISSUE CERTIFICATE OF CORRECTION
		:

The Request for Recalculation is **GRANTED** to the extent indicated.

The patent term adjustment has been determined to be **1113** days. The USPTO will *sua sponte* issue a certificate of correction reflecting the amount of PTA days determined by the recalculation.

Prior to the issuance of the certificate of correction, the USPTO will afford patentee an opportunity to be heard and request reconsideration. Accordingly, patentee has **one month or thirty (30) days**, whichever is longer, to file a request for reconsideration of this patent term adjustment calculation. See 35 U.S.C. 154(b)(3)(B)(ii) and 37 CFR 1.322(a)(4). No extensions of time will be granted under 37 CFR 1.136.

Patentee should use document code PET.OP if electronically filing a request for reconsideration of this patent term adjustment calculation. The patentee must also include the information required by 37 CFR 1.705(b)(2) and the fee required by 37 CFR 1.18(e). If patentee does not file a timely request for reconsideration of this patent term adjustment calculation including the information required by 37 CFR 1.705(b)(2) and the fee required by 37 CFR 1.18(e), the USPTO will issue a certificate of correction reflecting the PTA determination noted above.

Patentee should be aware that in order to preserve the right to review in the United States District Court for the District of Columbia of the USPTO patent term adjustment determination, patentee must ensure that he or she also take the steps required under 35 U.S.C. 154(b)(4)(A) in a timely manner. Nothing in the request for recalculation should be construed as providing an alternative time frame for commencing a civil action under 35 U.S.C. 154(b)(4)(A).

Any questions concerning this decision should be directed to the Office of Patent Legal Administration at 571-272-7702.

UNITED STATES PATENT AND TRADEMARK OFFICE

COMMISSIONER FOR PATENTS
UNITED STATES PATENT AND TRADEMARK OFFICE
P.O. BOX 1450
ALEXANDRIA, VA 22313-1450
www.uspto.gov

BLAKELY SOKOLOFF TAYLOR & ZAFMAN
12400 WILSHIRE BOULEVARD
SEVENTH FLOOR
LOS ANGELES, CA 90025-1030

COPY MAILED

MAY 15 2007

OFFICE OF PETITIONS

In re Application of
Tiphaine Leport, et al.
Application No. 10/899,026
Filed: July 27, 2004
Attorney Docket No. 7792P015

ON PETITION

This is a decision in response to the petition, filed January 29, 2007, to revive the above-identified application under the provisions of 37 CFR 1.137(b).

The petition is **GRANTED**.

The application became abandoned for a failure to reply in a timely manner to a non-final Office action mailed February 6, 2006. A Notice of Abandonment was mailed on August 18, 2006. In response, on January 29, 2007, the present petition was filed.

The petition satisfies the requirements of 37 CFR 1.137(b) in that petitioner has supplied (1) the reply in the form of an amendment; (2) the petition fee of $750; and (3) an adequate statement of unintentional delay[1].

The application is being referred to Technology Center AU 3733 for consideration of the amendment filed January 29, 2007.

Telephone inquiries concerning this decision should be directed to the undersigned at (571) 272-3204. Inquiries relating to further prosecution should be directed to the Technology Center.

Sherry D. Brinkley
Petitions Examiner
Office of Petitions

[1] 37 CFR 1.137(b)(3) requires a statement that the entire delay in filing the required reply from the due date for the reply until the filing of a grantable petition pursuant to 37 CFR 1.137(b) was unintentional. Although the statement contained in the petition varies from the language required by 37 CFR 1.137(b)(3), the statement will be construed as the statement required by 37 CFR 1.137(b)(3). Petitioner must notify the Office if this is **not** a correct interpretation of the statement contained in the instant petition.

UNITED STATES PATENT AND TRADEMARK OFFICE

Commissioner for Patents
United States Patent and Trademark Office
P.O. Box 1450
Alexandria, VA 22313-1450
www.uspto.gov

April 2006

Gregory E. Montone
ANTONELLI, TERRY, STOUT & KRAUS, LLP
1300 North Seventeenth Street
Suite 1800
Arlington, VA 22209-9889

APR 1 8 2006

In re Application of:
KATSUNORI HAYASHI
Serial No.: 10/899,062
Filed: 27 July 2004
Docket: 1309.44091X00
Title: DISK ARRAY DEVICE AND BATTERY OUTPUT CONTROL METHOD FOR DISK ARRAY DEVICE

DECISION ON PETITION TO MAKE SPECIAL FOR NEW APPLICATION UNDER 37 C.F.R 1.102(d) and M.P.E.P. § 708.02, VIII

This is a decision on the petition filed on October 11, 2005 to make the above-identified application special under the accelerated examination procedure set forth in MPEP § 708.02(VIII) in accordance with 37 C.F.R. § 1.102(d).

The petition to make the application special is **DISMISSED**.

In support of the petition, petitioner provides: a) the applicable petition fee; b) a statement that all claims are directed to a single invention, and that any election later required will be made without traverse; c) a statement that a pre-examination search was made, including the search areas; d) a copy of each of the references deemed most closely related to the claimed subject matter; and e) a discussion of the references.

For accelerated examination under MPEP § 708.02(VIII) in accordance with 37 C.F.R. § 1.102(d), a showing of the following is required: a) a petition to make special accompanied by the applicable petition fee; b) all claims are directed to a single invention; c) a statement that a pre-examination search was made, including the search areas; d) a copy of each of the references deemed most closely related to the claimed subject matter; and e) a detailed discussion of the references pointing out with the particularity required by 37 CFR 1.111 (b) and (c), how the claimed subject matter is distinguishable over the references.

The requirements of MPEP § 708.02(VIII)(a), (b) and (d) are considered to have been met. However, petitioner fails to meet the requirements of MPEP § 708.02(VIII)(c) and (e) because a proper search has not been performed and because each cited reference has not been discussed with the particularity required by 37 CFR 1.111 (b) and (c).

MPEP § 708.02(VIII)(c) requires applicant to "[submit] a statement(s) that a pre-examination search was made, listing the field of search by class and subclass, publication, Chemical Abstracts, foreign patents, etc." Applicant's field of search included US Class 713, subclasses 300, 310, 320, 330 and 340. Applicant also states that "[a] target keyword search (both US and foreign) was also conducted in Class 713" and that "[a]dditionally, a computer database search was conducted on the USPTO systems EAST and WEST." However, neither the target keywords used nor the details of the additional "computer database search" were provided. Thus, it is not clear that a proper search has been made.

Regarding the requirement of MPEP § 708.02(VIII)(e), 37 CFR § 1.111 (b) states "[a] general allegation that the claims define a patentable invention without specifically pointing out how the language of the claims patentably distinguishes them from the references does not comply with the requirements of this section." 37 CFR § 1.111 (c) states in part "the applicant or patent owner must clearly point out the patentable novelty which he or she thinks the claims present in view of the state of the art disclosed by the references cited or the objections made." Applicant has submitted four information disclosure statements (IDS) listing relevant references. The IDS filed 01 September 2005 cites PCT 93/24878 and the IDS filed 28 February 2006 cites US 2001/0046118 to Yamanashi et al., US 2003/0085622 to Hailey, EP 1320167 A1 and EP 1361516 A2. However, none of these references were discussed in the petition. Further, the discussion of the references fails to distinguish each independent claim from each reference in a manner satisfying 37 CFR § 1.111 (b) and (c). Some of the cited references are discussed in section 5(a) and alleged patentable features of claims 1 and 16 are recited in section 5(b); however, the specific language of the claims that distinguishes over each reference is not pointed out. General statements that none of the references teaches the claimed controller is insufficient to satisfy the requirements of MPEP § 708.02(VIII)(e). Therefore, the petition fails to meet the requirements of MPEP § 708.02(VIII) (e) that *each* cited reference be discussed with the particularity required by 37 CFR 1.111 (b) and (c).

While Technology Center Directors may have granted petitions that do not comply with the detailed discussion requirement of the Accelerated Examination procedure, Technology Center Director decisions on petitions are not binding precedent of the Patent Examining Corps, and the application of an improper standard in certain cases does not require the Office to continue to apply the improper standard in all cases. *See In re The Boulevard Entertainment, Inc.*, 334 F.3d 1336, 1343, 67 USPQ2d 1475, 1480 (Fed. Cir. 2003)).

For the above-mentioned reasons, the petition is dismissed. The application will therefore be taken up by the examiner for action in its regular turn.

Any request for reconsideration of this decision must be submitted within 2 (two) months of the date of this decision in order to be considered timely. Any request for reconsideration must include: i) keywords and details of the additional "computer database search"; and ii) a detailed discussion of each cited reference that clearly points out the specific language in each independent claim that distinguishes over the reference.

Any inquiry regarding this decision should be directed to Hien H. Phan, Special Program Examiner, at (571) 272-1606.

Hien H. Phan, Special Program Examiner
Technology Center 2800 - Semiconductors,
Electrical & Optical Systems & Components

UNITED STATES PATENT AND TRADEMARK OFFICE

Commissioner for Patents
United States Patent and Trademark Office
P.O. Box 1450
Alexandria, VA 22313-1450
www.uspto.gov

MAILED FROM
DIRECTORS OFFICE

MAY 12 2006

TECHNOLOGY CENTER 2800

April 2006

Gregory E. Montone
ANTONELLI, TERRY, STOUT & KRAUS, LLP
1300 North Seventeenth Street
Suite 1800
Arlington, VA 22209-9889

In re Application of: KATSUNORI HAYASHI Serial No.: 10/899,062 Filed: 27 July 2004 Docket: 1309.44091X00 Title: DISK ARRAY DEVICE AND BATTERY OUTPUT CONTROL METHOD FOR DISK ARRAY DEVICE	DECISION ON PETITION TO MAKE SPECIAL FOR NEW APPLICATION UNDER 37 C.F.R 1.102(d) and M.P.E.P. § 708.02, VIII

This is a decision on the petition filed on October 11, 2005 to make the above-identified application special under the accelerated examination procedure set forth in MPEP § 708.02(VIII) in accordance with 37 C.F.R. § 1.102(d).

The petition to make the application special is **DISMISSED**.

In support of the petition, petitioner provides: a) the applicable petition fee; b) a statement that all claims are directed to a single invention, and that any election later required will be made without traverse; c) a statement that a pre-examination search was made, including the search areas; d) a copy of each of the references deemed most closely related to the claimed subject matter; and e) a discussion of the references.

For accelerated examination under MPEP § 708.02(VIII) in accordance with 37 C.F.R. § 1.102(d), a showing of the following is required: a) a petition to make special accompanied by the applicable petition fee; b) all claims are directed to a single invention; c) a statement that a pre-examination search was made, including the search areas; d) a copy of each of the references deemed most closely related to the claimed subject matter; and e) a detailed discussion of the references pointing out with the particularity required by 37 CFR 1.111 (b) and (c), how the claimed subject matter is distinguishable over the references.

The requirements of MPEP § 708.02(VIII)(a), (b) and (d) are considered to have been met. However, petitioner fails to meet the requirements of MPEP § 708.02(VIII)(c) and (e) because a proper search has not been performed and because each cited reference has not been discussed with the particularity required by 37 CFR 1.111 (b) and (c).

MPEP § 708.02(VIII)(c) requires applicant to "[submit] a statement(s) that a pre-examination search was made, listing the field of search by class and subclass, publication, Chemical Abstracts, foreign patents, etc." Applicant's field of search included US Class 713, subclasses 300, 310, 320, 330 and 340. Applicant also states that "[a] target keyword search (both US and foreign) was also conducted in Class 713" and that "[a]dditionally, a computer database search was conducted on the USPTO systems EAST and WEST." However, neither the target keywords used nor the details of the additional "computer database search" were provided. Thus, it is not clear that a proper search has been made.

Regarding the requirement of MPEP § 708.02(VIII)(e), 37 CFR § 1.111 (b) states "[a] general allegation that the claims define a patentable invention without specifically pointing out how the language of the claims patentably distinguishes them from the references does not comply with the requirements of this section." 37 CFR § 1.111 (c) states in part "the applicant or patent owner must clearly point out the patentable novelty which he or she thinks the claims present in view of the state of the art disclosed by the references cited or the objections made." Applicant has submitted four information disclosure statements listing relevant references. The IDS filed 01 September 2005 cites PCT 93/24878 and the IDS filed 28 February 2006 cites US 2001/0046118 to Yamanashi et al., US 2003/0085622 to Hailey, EP 1320167 A1 and EP 1361516 A2. However, none of these references were discussed in the petition. Further, the discussion of the references fails to distinguish each independent claim from each reference in a manner satisfying 37 CFR § 1.111 (b) and (c). Some of the cited references are discussed in section 5(a) and alleged patentable features of claims 1 and 16 are recited in section 5(b); however, the specific language of the claims that distinguishes over each reference is not pointed out. General statements that none of the references teaches the claimed controller is insufficient to satisfy the requirements of MPEP § 708.02(VIII)(e). Therefore, the petition fails to meet the requirements of MPEP § 708.02(VIII) (e) that *each* cited reference be discussed with the particularity required by 37 CFR 1.111 (b) and (c).

While Technology Center Directors may have granted petitions that do not comply with the detailed discussion requirement of the Accelerated Examination procedure, Technology Center Director decisions on petitions are not binding precedent of the Patent Examining Corps, and the application of an improper standard in certain cases does not require the Office to continue to apply the improper standard in all cases. *See In re The Boulevard Entertainment, Inc.*, 334 F.3d 1336, 1343, 67 USPQ2d 1475, 1480 (Fed. Cir. 2003)).

For the above-mentioned reasons, the petition is dismissed. The application will therefore be taken up by the examiner for action in its regular turn.

Any request for reconsideration of this decision must be submitted within 2 (two) months of the date of this decision in order to be considered timely. Any request for reconsideration must include: i) keywords and details of the additional "computer database search"; and ii) a detailed discussion of each cited reference that clearly points out the specific language in each independent claim that distinguishes over the reference.

Any inquiry regarding this decision should be directed to Hien H. Phan, Special Program Examiner, at (571) 272-1606.

Hien H. Phan, Special Program Examiner
Technology Center 2800 - Semiconductors,
Electrical & Optical Systems & Components

UNITED STATES PATENT AND TRADEMARK OFFICE

Commissioner for Patents
United States Patent and Trademark Office
P.O. Box 1450
Alexandria, VA 22313-1450
www.uspto.gov

072006

Gregory E. Montone
ANTONELLI, TERRY, STOUT & KRAUS, LLP
1300 North Seventeenth Street
Suite 1800
Arlington, VA 22209-9889

JUL 25 2006

In re Application of: KATSUNORI HAYASHI Serial No.: 10/899,062 Filed: 27 July 2004 Docket: 1309.44091X00 Title: DISK ARRAY DEVICE AND BATTERY OUTPUT CONTROL METHOD FOR DISK ARRAY DEVICE	DECISION ON PETITION TO MAKE SPECIAL FOR NEW APPLICATION UNDER 37 C.F.R 1.102(d) and M.P.E.P. § 708.02, VIII

This is a decision on the petition filed on June 30, 2006, requesting for reconsideration of the previous decision mailed May 12, 2006, and making the above-identified application special under the accelerated examination procedure set forth in MPEP § 708.02(VIII) in accordance with 37 C.F.R. § 1.102(d).

The petition to make the application special is **GRANTED**.

The requirements of MPEP § 708.02(VIII)(a) through (e) are considered to have been met.

The application file is being forwarded to the examiner for expedited prosecution.

If the examiner can make this application special without prejudice to any possible interfering applications, and he/she should make a rigid search for such, he/she is authorized to do so for the next action. Should the application be rejected, the application will not be considered special for the subsequent action unless the applicant promptly makes a bona fide effort to place the application in condition for allowance, even if it is necessary to have an interview with the examiner to accomplish this purpose.

If the examiner finds any interfering application for the same subject matter, he/she should consider such application simultaneously with this application and should state in the official letter of such application that he/she is taking it out of its turn because of possible interference.

Should an appeal be taken in this application or should this application becomes involved in an interference, consideration of the appeal and the interference will be expedited by all Patent and

Trademark Office officials concerned, contingent likewise upon diligent prosecution by the applicant.

After allowance, this application will be given priority for printing. See M.P.E.P. § 1309.

The petition is granted to the extent indicated.

Any inquiry regarding this decision should be directed to Hien H. Phan, Special Program Examiner, at (571) 272-1606.

Hien H. Phan, Special Program Examiner
Technology Center 2800 - Semiconductors,
Electrical & Optical Systems & Components

UNITED STATES PATENT AND TRADEMARK OFFICE

Commissioner for Patents
United States Patent and Trademark Office
P.O. Box 1450
Alexandria, VA 22313-1450
www.uspto.gov

ANTONELLI, TERRY, STOUT &
KRAUS, LLP
1300 North Seventeenth Street
Suite 1800
Arlington, VA 22209-3873

MAILED

APR 03 2006

Technology Center 2100

In re Application of:
SAIKA et al.
Application No. 10/899,085
Filed: July 27, 2004
For: DATA PROTECTION METHOD, AUTHENTICATION METHOD, AND PROGRAM THEREFOR

DECISION ON PETITION TO MAKE SPECIAL

This is a decision on the petition, filed on 08 September 2005 under 37 C.F.R. §102(d) and M.P.E.P. § 708.02(VIII): Accelerated Examination, to make the above-identified application special.

The petition is **GRANTED**.

M.P.E.P. § 708.02, Section VIII which sets out the prerequisites for a grantable petition for Accelerated Examination under 37 C.F.R. § 102(d) states in relevant part:

> A new application (one which has not received any examination by the examiner) may be granted special status provided that applicant (and this term includes applicant's attorney or agent) complies with each of the following items:
>
> (A) Submits a petition to make special accompanied by the fee set forth in 37 CFR 1.17(h);
>
> (B) Presents all claims directed to a single invention, or if the Office determines that all the claims presented are not obviously directed to a single invention, will make an election without traverse as a prerequisite to the grant of special status;
>
> (C) Submits a statement(s) that a pre-examination search was made, listing the field of search by class and subclass, publication, Chemical Abstracts, foreign patents, etc. A search made by a foreign patent office satisfies this requirement;
>
> (D) Submits one copy each of the references deemed most closely related to the subject matter encompassed by the claims if said references are not already of record; and
>
> (E) Submits a detailed discussion of the references, which discussion points out, with the particularity required by 37 CFR 1.111 (b) and (c), how the claimed subject matter is patentable over the references.

Applicant's submission of 08 September 2005 meets all the criteria set out above. Accordingly, the petition is **GRANTED**. The application file is being forwarded to the Examiner for accelerated examination in accordance with M.P.E.P. § 708.02. If the application is subsequently allowed, it will be given priority for printing. See M.P.E.P. § 1309.

Vincent N. Trans
Special Program Examiner
Technology Center 2100
Computer Architecture, Software, and
Information Security
571-272-3613

UNITED STATES PATENT AND TRADEMARK OFFICE

Commissioner for Patents
United States Patent and Trademark Office
P.O. Box 1450
Alexandria, VA 22313-1450
www.uspto.gov

STERNE, KESSLER, GOLDSTEIN & FOX P.L.L.C.
1100 NEW YORK AVENUE, N.W.
WASHINGTON DC 20005

COPY MAILED
JUN 20 2008

In re Application of :
Ruben et al. :
Application No. 10/899,107 : ON PETITION
Filed: July 27, 2004 :
Attorney Docket Number: PF466P2D1 :

This is a decision on the "Petition Under 37 CFR §1.182 to move Responsive Papers From Incorrect Image File Wrapper To Correct Image File Wrapper", which is being treated under 37 CFR §1.181 filed May 22, 2008 to withdraw the holding of abandonment. In the alternative, petitioner has requested treatment under 37 CFR 1.137(b)

The petition filed under 37 CFR 1.181 is **Dismissed**.

The petition filed under 37 CFR 1.182 is **Dismissed as Moot**.

The petition filed under 37 CFR 1.137(b) is **Granted**.

This application was held abandoned October 15, 2007 for failure to timely reply to the final Office Action mailed on January 15, 2008. The final Office Action set a three (3) month extendable time period for reply. Accordingly, this application became abandoned on January 16, 2008. A Notice of Abandonment was mailed May 28, 2008.

Petitioner contends a reply to the final Office action was filed on April 18, 2008. Petitioner states that the reply in the form of an amendment, Request for Continued Examination (RCE) and request for a three month extension of time was submitted via certificate of mailing on April 15, 2008.

A review of the record shows that a reply was received. However, the application

number contained an incorrect application number. The reply did contain the correct art unit, filing date, applicant and title of invention.

Correspondence directed to the Patent and Trademark Office concerning a previously filed application for a patent must identify the application number and filing date assigned to that application by the Office. See, 37 CFR 1.5(a). In the above-referenced application, applicant failed to correctly identify the application by citing application 10/889,107 rather than the correct application No. 10/899,107. The Office elects, in this instance, to treat applicants' listing of a transposed application number as a correctable minor error as permitted under MPEP 502. However, applicant is reminded that minor errors, such as occurred in the instant application, are to be avoided in the future by the careful review of correspondence prior to submission to the Office.

The response submitted April 18, 2008 has been located.

It is however noted that while the reply was received in the Office on April 18, 2008, the last day of the extendable time period expired on April 15, 2008. Thus, in order for this reply to be considered timely, petitioner had to rely on the certificate of mailing. The certificate of mailing on the extension of time and transmittal, was not valid. A review of the certificate of mailing shows that the date was missing. The date only shows "April 2008" and does not include a day. Under 37 CFR 1.8, a person may state on certain papers directed to the Office (>some<exceptions are stated in 37 CFR 1.8), the date on which the paper will be deposited in the United States Postal Service or transmitted by facsimile. If the date stated is within the period for reply, the reply in most instances will be considered to be timely. This is true even if the paper does not actually reach the Office until after the end of the period for reply. As such the amendment submitted was not timely.

Although petitioner did have a valid certificate of mailing contained on the RCE, which included a request for any extension of time, the lack of a timely submission requirement pursuant to 37 CFR 1.114(c) makes this reply incomplete. Further review of the record shows that a non entered amendment after the final Office action was not ever presented. Thus, petitioner cannot rely on a previously submitted amendment to meet the submission requirement 37 CFR 1.114(c).

Accordingly, the petition filed under 37 CFR 1.181 is **dismissed**.

The petition under 37 CFR 1.182 is not required to move the application papers. As such the petition filed under 37 CFR 1.182 **dismissed as moot**. The petition fee will be refunded.

Petition Under 37 CFR 1.137(b)

The petition is **GRANTED**.

The application became abandoned for failure to timely file a reply within the meaning of 37 CFR 1.113 to the final Office action of October 15, 2007. The proposed reply required for consideration of a petition to revive must be a Notice of Appeal (and appeal fee required by 37 CFR 41.20(b)(2), an amendment that *prima facie* places the application in condition for allowance, a Request for Continued Examination and submission (37 CFR 1.114), or the filing of a continuing application under 37 CFR 1.53(b). See MPEP 711.03(c)(III)(A)(2). No extensions of time pursuant to the provisions of 37 CFR 1.136(a) were obtained. Accordingly, the date of abandonment of this application is April 16, 2008 .

The petition satisfies the requirements of 37 CFR 1.137(b) in that petitioner has supplied (1) the reply in the form of a Request for Continued Examination (RCE) and fee of $ 810.00, and the submission required by 37 CFR 1.114; (2) the petition fee of $ 1540.00 ; and (3) an adequate statement of unintentional delay.

37 CFR 1.137(b)(3) requires a statement that "the entire delay in filing the required reply from the due date for the reply until the filing of a grantable petition pursuant to 37 CFR 1.137(b) was unintentional." Since the statement appearing in the petition varies from the language required by 37 CFR 1.137(b)(3), the statement is being construed as the required statement. Petitioner must notify the Office if this is **not** a correct reading of the statement appearing in the petition.

The application file does not indicate a change of address has been filed in this case, although the address given on the petition differs from the address of record. A change of address should be filed in this case in accordance with MPEP 601.03. A courtesy copy of this decision is being mailed to the address noted on the petition. However, until otherwise instructed, all future correspondence regarding this application will be mailed solely to the address of record.

This application is being referred to Technology Center AU 1646 for processing of the RCE and for appropriate action by the Examiner in the normal course of business on the previously submitted amendment in accordance with 37 CFR 1.114.

Telephone inquiries concerning this matter should be directed to the undersigned at (571) 272-3215.

Charlema R. Grant

Charlema R. Grant
Petition Attorney
Office of Petitions

UNITED STATES PATENT AND TRADEMARK OFFICE

Commissioner for Patents
United States Patent and Trademark Office
P.O. Box 1450
Alexandria, VA 22313-1450
www.uspto.gov

Kenyon & Kenyon LLP
One Broadway
New York, New York 10004

COPY MAILED
MAR 15 2010

In re Patent No. 7,504,105	:
Ruben et al.	: DECISION UPON REMAND AND
Issue Date: March 17, 2009	: RECONSIDERATION OF
Application No. 10/899,107	: PATENT TERM ADJUSTMENT
Filed: July 27, 2004	: AND NOTICE OF INTENT
Attorney Docket No. PF466P2D1	: TO ISSUE CERTIFICATE OF
Title: Treatment Using	: CORRECTION
Antibodies to Cytokine Receptor	:
Common Gamma Chain Like	

This is a decision following remand from the District Court for the District of Columbia regarding the patent term adjustment indicated on the above-identified patent. The Court remanded this matter to the U.S. Patent and Trademark Office for recalculation of the patent term adjustment in accordance with the decision in Wyeth & Elan Pharma Int'l Ltd. v. Kappos, 591 F.3d 1364 (Fed. Cir. 2010).

The patent term adjustment indicated on the above-identified patent has been recalculated as directed by the Court. The term of the above-identified patent is extended or adjusted by five hundred eighty-one (581) days.

The application is being forwarded to the Certificates Branch for issuance of a certificate of correction indicating that the term of the above-identified patent is extended or adjusted by five hundred eighty-one (581) days.

Telephone inquiries specific to this matter should be directed to Senior Legal Advisor, Kery A. Fries at (571) 272-7757.

/Kery A. Fries/

Kery A. Fries
Senior Legal Advisor Attorney
Office of Patent Legal Administration
Office of Associate Commissioner
For Patent Examination Policy

Enclosure: Copy of DRAFT Certificate of Correction

UNITED STATES PATENT AND TRADEMARK OFFICE

CERTIFICATE OF CORRECTION

PATENT : 7,504,105 B2

DATED : **March 17, 2009** **DRAFT**

INVENTOR(S) : Ruben et al.

It is certified that error appears in the above-identified patent and that said Letters Patent is hereby corrected as shown below:

On the cover page,

[*] Notice: Subject to any disclaimer, the term of this patent is extended or adjusted under 35 USC 154(b) by 316 days

Delete the phrase "by 316 days" and insert – by 581 days--

Day : Wednesday

PALM INTRANET

Date: 3/10/2010
Time: 13:39:43

PTA Calculations for Application: 10/899107			
Application Filing Date:	07/27/2004	PTO Delay (PTO):	410
Issue Date of Patent:	03/17/2009	Three Years:	0
Pre-Issue Petitions:	0	Applicant Delay (APPL):	94
Post-Issue Petitions:	0	Total PTA (days):	581
PTO Delay Adjustment:	265		

File Contents History

Number	Date	Contents Description	PTO	APPL	START
100	03/10/2010	ADJUSTMENT OF PTA CALCULATION BY PTO	265		
95.5	02/25/2009	PTA 36 MONTHS			
95	03/17/2009	PATENT ISSUE DATE USED IN PTA CALCULATION			
94	02/12/2009	EXPORT TO FINAL DATA CAPTURE			
93	02/11/2009	FINISHED INITIAL DATA CAPTURE			
92	02/11/2009	DISPATCH TO FDC			
91	01/21/2009	APPLICATION IS CONSIDERED READY FOR ISSUE			
90	01/12/2009	ISSUE FEE PAYMENT VERIFIED			
89	01/12/2009	ISSUE FEE PAYMENT RECEIVED			
88	01/12/2009	CHANGE IN POWER OF ATTORNEY (MAY INCLUDE ASSOCIATE POA)			
87	01/12/2009	CORRESPONDENCE ADDRESS CHANGE			
86	12/19/2008	SEQUENCE FORWARDED TO PUBS ON TAPE			
85	12/08/2008	EXPORT TO INITIAL DATA CAPTURE			
84	12/05/2008	MAIL NOTICE OF ALLOWANCE			
83	12/05/2008	ISSUE REVISION COMPLETED			
82	12/05/2008	DOCUMENT VERIFICATION			
81	12/05/2008	NOTICE OF ALLOWANCE DATA VERIFICATION COMPLETED			
80	12/05/2008	CASE DOCKETED TO EXAMINER IN GAU			
78	11/21/2008	NOTICE OF ALLOWABILITY			
72	09/15/2008	INFORMATION DISCLOSURE STATEMENT CONSIDERED			
71	10/20/2008	INFORMATION DISCLOSURE STATEMENT CONSIDERED			
70	10/25/2008	DATE FORWARDED TO EXAMINER			

69	10/20/2008	RESPONSE AFTER NON-FINAL ACTION			
68	10/20/2008	ELECTRONIC INFORMATION DISCLOSURE STATEMENT			
67	09/15/2008	REFERENCE CAPTURE ON IDS			
66	09/15/2008	INFORMATION DISCLOSURE STATEMENT (IDS) FILED			
65	10/20/2008	INFORMATION DISCLOSURE STATEMENT (IDS) FILED			
64	09/15/2008	INFORMATION DISCLOSURE STATEMENT (IDS) FILED			
63	09/04/2008	MAIL NON-FINAL REJECTION	17		51
62	09/02/2008	NON-FINAL REJECTION			
54	06/27/2008	DATE FORWARDED TO EXAMINER			
53	04/18/2008	AMENDMENT SUBMITTED/ENTERED WITH FILING OF CPA/RCE			
52	06/27/2008	DATE FORWARDED TO EXAMINER			
51	04/18/2008	REQUEST FOR CONTINUED EXAMINATION (RCE)		94	33
50	06/27/2008	DISPOSAL FOR A RCE / CPA / R129			
49	04/18/2008	WORKFLOW - REQUEST FOR RCE - BEGIN			
48	06/20/2008	MAIL-PETITION TO REVIVE APPLICATION - GRANTED			
47	06/20/2008	PETITION TO REVIVE APPLICATION - GRANTED			
46	05/22/2008	PETITION ENTERED			
45	06/20/2008	MAIL-PETITION DECISION - DISMISSED			
44	06/20/2008	PETITION DECISION - DISMISSED			
43	05/22/2008	PETITION ENTERED			
42	06/20/2008	MAIL-PETITION DECISION - DISMISSED			
41	06/20/2008	PETITION DECISION - DISMISSED			
40	05/22/2008	PETITION ENTERED			
39	05/28/2008	MAIL ABANDONMENT FOR FAILURE TO RESPOND TO OFFICE ACTION			
38	05/23/2008	ABAND. FOR FAILURE TO RESPOND TO O. A.			
37	04/30/2008	CASE DOCKETED TO EXAMINER IN GAU			
36	01/15/2008	CASE DOCKETED TO EXAMINER IN GAU			
35	01/14/2008	CHANGE IN POWER OF ATTORNEY (MAY INCLUDE ASSOCIATE POA)			
34	01/11/2008	CORRESPONDENCE ADDRESS CHANGE			
33	10/15/2007	MAIL FINAL REJECTION (PTOL - 326)			

32	10/12/2007	FINAL REJECTION			
31	08/01/2007	INFORMATION DISCLOSURE STATEMENT CONSIDERED			
30	08/01/2007	INFORMATION DISCLOSURE STATEMENT (IDS) FILED		0	28
29	08/03/2007	DATE FORWARDED TO EXAMINER			
28	08/01/2007	RESPONSE AFTER NON-FINAL ACTION			
27	08/01/2007	INFORMATION DISCLOSURE STATEMENT (IDS) FILED			
26	05/01/2007	MAIL NON-FINAL REJECTION			
25	04/30/2007	NON-FINAL REJECTION			
24	01/25/2007	INFORMATION DISCLOSURE STATEMENT CONSIDERED			
23	07/27/2004	INFORMATION DISCLOSURE STATEMENT CONSIDERED			
22	01/25/2007	REFERENCE CAPTURE ON IDS			
21.7	01/25/2007	INFORMATION DISCLOSURE STATEMENT (IDS) FILED		0	19
21	01/25/2007	INFORMATION DISCLOSURE STATEMENT (IDS) FILED			
20	02/15/2007	DATE FORWARDED TO EXAMINER			
19	01/25/2007	RESPONSE TO ELECTION / RESTRICTION FILED			
18	01/25/2007	REQUEST FOR EXTENSION OF TIME - GRANTED			
17	10/25/2006	MAIL RESTRICTION REQUIREMENT	393		-1
16	10/24/2006	REQUIREMENT FOR RESTRICTION / ELECTION			
15	12/07/2004	IFW TSS PROCESSING BY TECH CENTER COMPLETE			
14	12/07/2004	CASE DOCKETED TO EXAMINER IN GAU			
13	07/27/2004	REFERENCE CAPTURE ON IDS			
12.7	07/27/2004	INFORMATION DISCLOSURE STATEMENT (IDS) FILED			
12	07/27/2004	INFORMATION DISCLOSURE STATEMENT (IDS) FILED			
11	09/24/2004	APPLICATION RETURN FROM OIPE			
10	09/24/2004	APPLICATION RETURN TO OIPE			
9	09/23/2004	APPLICATION DISPATCHED FROM OIPE			
8	09/24/2004	APPLICATION IS NOW COMPLETE			
7	09/16/2004	CLEARED BY L&R (LARS)			
6	09/09/2004	REFERRED TO LEVEL 2 (LARS) BY OIPE CSR			

5	09/09/2004	CASE CLASSIFIED BY OIPE			
4	08/19/2004	IFW SCAN & PACR AUTO SECURITY REVIEW			
3	08/02/2004	CRF IS GOOD TECHNICALLY / ENTERED INTO DATABASE			
2	07/27/2004	CRF DISK HAS BEEN RECEIVED BY PREEXAM / GROUP / PCT			
1	07/27/2004	INITIAL EXAM TEAM NN			

Search Another: Application# [ ] Search

EXPLANATION OF PTA CALCULATION

EXPLANATION OF PTE CALCULATION

To go back, right click here and select Back. To go forward, right click here and select Forward. To refresh, right click here and select Refresh.

Back to OASIS | Home page

UNITED STATES PATENT AND TRADEMARK OFFICE

UNITED STATES DEPARTMENT OF COMMERCE
United States Patent and Trademark Office
Address: COMMISSIONER FOR PATENTS
P.O. Box 1450
Alexandria, Virginia 22313-1450
www.uspto.gov

ROYLANCE, ABRAMS, BERDO & GOODMAN, L.L.P.
1300 19TH STREET, N.W.
SUITE 600
WASHINGTON,, DC 20036

Mail Date: 04/21/2010

Applicant	: Seong-ki Jin	: DECISION ON REQUEST FOR
Patent Number	: 7586054	: RECALCULATION of PATENT
Issue Date	: 09/08/2009	: TERM ADJUSTMENT IN VIEW
Appliction No	: 10/899,114	: OF WYETH AND NOTICE OF INTENT TO
Filed	: 07/27/2004	: ISSUE CERTIFICATE OF CORRECTION
		:

The Request for Recalculation is **GRANTED** to the extent indicated.

The patent term adjustment has been determined to be **1013** days. The USPTO will *sua sponte* issue a certificate of correction reflecting the amount of PTA days determined by the recalculation.

Prior to the issuance of the certificate of correction, the USPTO will afford patentee an opportunity to be heard and request reconsideration. Accordingly, patentee has **one month or thirty (30) days**, whichever is longer, to file a request for reconsideration of this patent term adjustment calculation. See 35 U.S.C. 154(b)(3)(B)(ii) and 37 CFR 1.322(a)(4). No extensions of time will be granted under 37 CFR 1.136.

Patentee should use document code PET.OP if electronically filing a request for reconsideration of this patent term adjustment calculation. The patentee must also include the information required by 37 CFR 1.705(b)(2) and the fee required by 37 CFR 1.18(e). If patentee does not file a timely request for reconsideration of this patent term adjustment calculation including the information required by 37 CFR 1.705(b)(2) and the fee required by 37 CFR 1.18(e), the USPTO will issue a certificate of correction reflecting the PTA determination noted above.

Patentee should be aware that in order to preserve the right to review in the United States District Court for the District of Columbia of the USPTO patent term adjustment determination, patentee must ensure that he or she also take the steps required under 35 U.S.C. 154(b)(4)(A) in a timely manner. Nothing in the request for recalculation should be construed as providing an alternative time frame for commencing a civil action under 35 U.S.C. 154(b)(4)(A).

Any questions concerning this decision should be directed to the Office of Patent Legal Administration at 571-272-7702.

PTO/SB/20 (05-06)
Approved for use through XX/XX/XXXX. OMB 0651-00XX
U.S. Patent and Trademark Office; U.S DEPARTMENT OF COMMERCE
Under the Paperwork Reduction Act of 1995, no persons are required to respond to a collection of information unless it displays a valid OMB control number.

REQUEST FOR PARTICIPATION IN THE PATENT PROSECUTION HIGHWAY (PPH) PILOT PROGRAM BETWEEN THE JPO AND THE USPTO

Application No.:	10/899,122	First Named Inventor:	Yoshihiro, Sakayanagi
Filing Date:	July 27, 2004	Attorney Docket No.:	120553
Title of the Invention:	Concentration Detector		

THIS REQUEST FOR PARTICIPATION IN THE PPH PILOT PROGRAM MUST BE FAXED TO:
THE OFFICE OF THE COMMISSIONER FOR PATENTS AT 571-273-0125 DIRECTED TO THE ATTENTION OF MAGDALEN GREENLIEF

APPLICANT HEREBY REQUESTS PARTICIPATION IN THE PATENT PROSECUTION HIGHWAY (PPH) PILOT PROGRAM AND PETITIONS TO MAKE THE ABOVE-IDENTIFIED APPLICATION SPECIAL UNDER THE PPH PILOT PROGRAM.

The above-identified application validly claims priority under 35 U.S.C. 119(a) and 37 CFR 1.55 to one or more corresponding JPO application(s).

The JPO application number(s) is/are: Japan 2003-208060
The filing date of the JPO application(s) is/are: August 20, 2003

I. List of Required Documents:

a. **A copy of all JPO office actions (including "Decision to Grant a Patent") in the above-identified JPO application(s).**

☑ Is attached.

☐ Is available via Dossier Access System. Applicant hereby requests that the USPTO obtain these documents via the Dossier Access System.

b. **A copy of all claims which were determined to be patentable by the JPO in the above-identified JPO application(s).**

☑ Is attached.

☐ Is available via Dossier Access System. Applicant hereby requests that the USPTO obtain these documents via the Dossier Access System.

c. **English translations of the documents in a. and b. above along with a statement that the English translations are accurate are attached.** Attached

d. **Information disclosure statement listing the documents cited in the JPO office actions is attached.**

Copies of all documents are attached except for U.S. patents or U.S. patent application publications.

Attached

This collection of information is required by 35 U.S.C. 119, 37 CFR 1.55, and 37 CFR 1.102(d). The information is required to obtain or retain a benefit by the public, which is to file (and by the USPTO to process) an application. Confidentiality is governed by 35 U.S.C. 122 and 37 CFR 1.11 and 1.14. This collection is estimated to take 2 hours to complete, including gathering, preparing, and submitting the completed application form to the USPTO. Time will vary depending upon the individual case. Any comments on the amount of time you require to complete this form and/or suggestions for reducing this burden should be sent to the Chief Information Officer, U.S. Patent and Trademark Office, U.S. Department of Commerce, P.O. Box 1450, Alexandria, VA 22313-1450. DO NOT SEND FEES OR COMPLETED FORMS TO THIS ADDRESS. **FAX COMPLETED FORMS TO: Office of the Commissioner for Patents at 571-273-0125, Attention: Magdalen Greenlief.**

REQUEST FOR PARTICIPATION IN THE PATENT PROSECUTION HIGHWAY (PPH) PILOT PROGRAM BETWEEN THE JPO AND THE USPTO

(continued)

Application No.:	10/899,122	First Named Inventor:	Yoshihiro Sakayanagi

II. Claims Correspondence Table:

Claims in US Application	Patentable Claims in JP Application	Explanation regarding the correspondence
Claim 1	Claim 1	Both claims are the same, as amended in the attached Preliminary Amendment
Claim 2	Claim 2	Both claims are the same
Claim 3	Claim 3	Both claims are the same
Claim 4	Claim 4	Both claims are the same except for dependency. Claim 4 in JP Application depends on any claims 1 to 3. In contrast, Claim 4 in US Application depends on claim 1 only.
Claim 5	Claim 5	Both claims are the same except for dependency. Claim 5 in JP Application depends on any one of claims 1 to 4. In contrast, Claim 5 in US Application depends on Claim 1 only.

III. All the claims in the US application sufficiently correspond to the patentable/allowable claims in the JPO application. YES

IV. Payment of Fees:

The Commissioner is hereby authorized to charge the petition fee under 37 CFR 1.17(h) as required by 37 CFR 1.102(d) to ☑ **Deposit Account No.** 15-0461.

☐ **Credit Card. Credit Card Payment Form (PTO-2038) is attached.**

Signature	Date November 14, 2006
Name (Print/Typed) John S. Kern	Registration Number 42,719

WARNING:

Petitioner/applicant is cautioned to avoid submitting personal information in documents filed in a patent application that may contribute to identity theft. Personal information such as social security numbers, bank account numbers, or credit card numbers (other than a check or credit card authorization form PTO-2038 submitted for payment purposes) is never required by the USPTO to support a petition or an application. If this type of personal information is included in documents submitted to the USPTO, petitioners/applicants should consider redacting such personal information from the documents before submitting them to the USPTO. Petitioner/applicant is advised that the record of a patent application is available to the public after publication of the application (unless a non-publication request in compliance with 37 CFR 1.213(a) is made in the application) or issuance of a patent. Furthermore, the record from an abandoned application may also be available to the public if the application is referenced in a published application or an issued patent (see 37 CFR 1.14). Checks and credit card authorization forms PTO-2038 submitted for payment purposes are not retained in the application file and therefore are not publicly available.

Privacy Act Statement

The **Privacy Act of 1974 (P.L. 93-579)** requires that you be given certain information in connection with your submission of the attached form related to a patent application or patent. Accordingly, pursuant to the requirements of the Act, please be advised that: (1) the general authority for the collection of this information is 35 U.S.C. 2(b)(2); (2) furnishing of the information solicited is voluntary; and (3) the principal purpose for which the information is used by the U.S. Patent and Trademark Office is to process and/or examine your submission related to a patent application or patent. If you do not furnish the requested information, the U.S. Patent and Trademark Office may not be able to process and/or examine your submission, which may result in termination of proceedings or abandonment of the application or expiration of the patent.

The information provided by you in this form will be subject to the following routine uses:

1. The information on this form will be treated confidentially to the extent allowed under the Freedom of Information Act (5 U.S.C. 552) and the Privacy Act (5 U.S.C 552a). Records from this system of records may be disclosed to the Department of Justice to determine whether disclosure of these records is required by the Freedom of Information Act.
2. A record from this system of records may be disclosed, as a routine use, in the course of presenting evidence to a court, magistrate, or administrative tribunal, including disclosures to opposing counsel in the course of settlement negotiations.
3. A record in this system of records may be disclosed, as a routine use, to a Member of Congress submitting a request involving an individual, to whom the record pertains, when the individual has requested assistance from the Member with respect to the subject matter of the record.
4. A record in this system of records may be disclosed, as a routine use, to a contractor of the Agency having need for the information in order to perform a contract. Recipients of information shall be required to comply with the requirements of the Privacy Act of 1974, as amended, pursuant to 5 U.S.C. 552a(m).
5. A record related to an International Application filed under the Patent Cooperation Treaty in this system of records may be disclosed, as a routine use, to the International Bureau of the World Intellectual Property Organization, pursuant to the Patent Cooperation Treaty.
6. A record in this system of records may be disclosed, as a routine use, to another federal agency for purposes of National Security review (35 U.S.C. 181) and for review pursuant to the Atomic Energy Act (42 U.S.C. 218(c)).
7. A record from this system of records may be disclosed, as a routine use, to the Administrator, General Services, or his/her designee, during an inspection of records conducted by GSA as part of that agency's responsibility to recommend improvements in records management practices and programs, under authority of 44 U.S.C. 2904 and 2906. Such disclosure shall be made in accordance with the GSA regulations governing inspection of records for this purpose, and any other relevant (*i.e.*, GSA or Commerce) directive. Such disclosure shall not be used to make determinations about individuals.
8. A record from this system of records may be disclosed, as a routine use, to the public after either publication of the application pursuant to 35 U.S.C. 122(b) or issuance of a patent pursuant to 35 U.S.C. 151. Further, a record may be disclosed, subject to the limitations of 37 CFR 1.14, as a routine use, to the public if the record was filed in an application which became abandoned or in which the proceedings were terminated and which application is referenced by either a published application, an application open to public inspection or an issued patent.
9. A record from this system of records may be disclosed, as a routine use, to a Federal, State, or local law enforcement agency, if the USPTO becomes aware of a violation or potential violation of law or regulation.

I. List of Required Documents

a. A copy of all JPO office actions (including "Decision to Grant a Patent") in the JPO application.

- Decision to Grant a Patent (Original(Japanese))
- Notice of Reasons for Rejection (Original(Japanese))

I. List of Required Documents

c. English translations the documents in a. and b. along with a statement that the English translations are accurate.

- Statement that the English translations are accurate
- Decision to Grant a Patent (English Translation)
- Notice of Reasons for Rejection (English Translation)
- All claims which were determined to be patentable by the JPO (English Translation)

I. List of Required Documents

b. A copy of all claims which were determined to be patentable by the JPO in the JPO application.

·All claims which were determined to be patentable by the JPO (Japanese)

CERTIFICATION OF ENGLISH LANGUAGE TRANSLATION OF DOCUMENTS

I, [Tadaaki Higuchi], hereby declare and state that I am knowledgeable of each of the Japanese and English languages. I hereby certify that the attached English language translation is an accurate translation of the following documents;

· "Notice of Reasons for Rejection" which was received from in the Japanese Patent Office on November 1, 2005 (Mailing Date).

· "All claims which were determined to be patentable by JPO in the JPO application".

· "Decision to Grant a Patent" which was received from in the Japanese Patent Office on February 7, 2006 (Mailing Date).

October 31, 2006
Date

T. Higuchi
Signature
Tadaaki Higuchi
Typed Name

Reference No.: 1033508
Mailing No.: 043343
Mailing Date: February 7, 2006

Decision to Grant a Patent
(ENGLISH TRANSLATION)

Patent Application No.: 2003-208060
Drafting Date: January 30, 2006
Patent Office Examiner: Kouichi Kuroda 9218 2J00
Title of the invention: CONCETNTRATION DETECTOR
The Number of claims: 5
Applicant: TOYOTA JIDOSHA KABUSHIKI KAISHA
Attorney: Astushi Aoki et al.

This patent application is to be granted a patent, since no reason for rejection has been found.

I certify that matters described above are identical to those recorded in the file.

Date of certification February 1, 2006

Administrative Official of Ministry of Economy Trade and Industry: Hirase Emiko

Prepaid Account Deposit Account No. 008268

Payment years 1 ~ 3 years

特許査定

特許出願の番号	特願２００３－２０８０６０
起案日	平成１８年　１月３０日
特許庁審査官	黒田　浩一　　９２１８　２Ｊ００
発明の名称	濃度検出装置
請求項の数	５
特許出願人	トヨタ自動車株式会社
代理人	青木　篤（外　３名）

この出願については、拒絶の理由を発見しないから、特許査定する。

上記はファイルに記録されている事項と相違ないことを認証する。
認証日　平成18年 2月 1日　経済産業事務官　平瀬　恵美子
包括納付対象案件　予納台帳番号　００８２６８
納付年分　１年～３年分

Reference No.: 1033508
Mailing No.: 403785
Mailing Date: November 1, 2005

Notice of Reasons for Rejection
(ENGLISH TRANSLATION)

Patent Application No.: 2003-208060
Drafting Date: October 25, 2005
Patent Office Examiner: Kouichi Kuroda 9218 2J00
Attorney for Patent Application: Astushi Aoki et al.
Applicable Provisions: Article 36

It is deemed that this application should be rejected for the following reasons. Any argument should be submitted in writing within 60 days from the mailing date of this notice.

REASONS

The description of claims of this application do not satisfy the requirement prescribed in Article 36, paragraph 6, item 2 of the Patent Law on the following points.

Remarks

In claim 1, "a concentration detector for detecting the concentration of a particular component in a gas based upon the amount of oxygen formed by the decomposition of the particular component" is described.

However, it is obvious that every particular component does not form oxygen by the decomposition. Therefore, the invention described in claim 1 includes contradiction. As a result, the invention described in claim 1 is not clear.

In paragraph number [0011], "zirconia oxide" is cited as an oxygen ion conducting solid material. (It is deemed that "an oxygen ion conducting solid material" is type error and "an oxygen ion conducting solid electrolyte" is correct.) However, "zirconia" is "zirconium oxide". Therefore, the expression of "zirconia oxide" includes contradiction as technical terms.

No reasons for rejection have been found at the present time for the inventions of claims other than the claims pointed out in this Notice of Reasons for Rejection. If any new reasons for rejection are discovered, a further notification will be issued.

For inquiries on the content of this Notice of Reasons for Rejection, please contact at the following:
TEL: 03-3581-1101 (Ext: 3252)
Fax: 03-3592-8858
Examination Department No.1, Material Analysis
Examiner Kouichi Kuroda

Record of Results of Prior Art Search

・Technical Fields Searched

IPC 7th G01N 27/26 - 27/49

・Prior art

1. Japanese Unexamined Patent Publication (kokai) No. 2003-294696

2. Japanese Unexamined Patent Publication (kokai) No. 2000-137018

3. Japanese Unexamined Patent Publication (kokai) No. 2004-198351

This record of results of prior art search does not constitute a reason for rejection.

拒絶理由通知書

特許出願の番号	特願２００３－２０８０６０
起案日	平成１７年１０月２５日
特許庁審査官	黒田　浩一　　９２１８　２Ｊ００
特許出願人代理人	青木　篤（外　３名）　様
適用条文	第３６条

この出願は、次の理由によって拒絶をすべきものである。これについて意見があれば、この通知書の発送の日から６０日以内に意見書を提出して下さい。

理　由

この出願は、特許請求の範囲の記載が下記の点で、特許法第３６条第６項第２号に規定する要件を満たしていない。

記

請求項１には、「ガス中の特定成分の濃度を該特定成分の分解時に生成される酸素の量に基づいて検出する濃度検出装置において、」と記載されているが、あらゆる特定成分が分解時に酸素を生成するものではないことは明らかであるから、請求項１に記載の発明は矛盾を含んだものとなっており明確でない。

なお、段落番号【００１１】は、酸素イオン伝導性固体（「電解質」が脱字していると認められる）として「酸化ジルコニア」が挙げられているが、「ジルコニア」とは「酸化ジルコニウム」のことであるから「酸化ジルコニア」なる表現は技術用語として矛盾を含んでいるものとなっている。）

この拒絶理由通知書中で指摘した請求項以外の請求項に係る発明については、現時点では、拒絶の理由を発見しない。拒絶の理由が新たに発見された場合には拒絶の理由が通知される。

なお、この拒絶理由通知に不明な点がある場合、下記までご連絡下さい。

ＴＥＬ　０３－３５８１－１１０１　内線３２５２
ＦＡＸ　０３－３５９２－８８５８
審査室　審査第１部材料分析
担当　　黒田　浩一

先行技術文献調査結果の記録

・調査した分野　　ＩＰＣ第７版
Ｇ０１Ｎ２７／２６－２７／４９

・先行技術文献
特開2003-294696
特開2000-137018
特開2004-198351

この先行技術文献調査結果の記録は、拒絶理由を構成するものではない。

An English translation of all claims which were determined to be patentable by the JPO in JPO application

1. A concentration detector for detecting the concentration of a particular component in gas, which component forms oxygen by decomposition, based upon the amount of oxygen formed by the decomposition of the particular component, comprising oxygen-forming means for forming oxygen by decomposing the above particular component, oxygen-discharging means for discharging oxygen from the gas before oxygen is formed by the oxygen-forming means, and oxygen-discharging capability-increasing means for increasing the oxygen-discharging capability of the oxygen-discharging means when the rate of increase of the oxygen concentration in the gas is greater than a predetermined rate before oxygen is formed by the oxygen-forming means.

2. A concentration detector as set forth in claim 1, wherein the oxygen-discharging capability of the oxygen-discharging means varies depending upon a voltage applied to the oxygen-discharging means, the voltage applied to the oxygen-discharging means is controlled depending upon the oxygen concentration in the gas after the oxygen-discharging capability of the oxygen-discharging means has been increased by the oxygen-discharging capability-increasing means, and a degree of increasing the oxygen-discharging capability of the oxygen-discharging means by the oxygen-discharging capability-increasing means is determined based on the voltage applied to the oxygen-discharging means after the oxygen-discharging capability of the oxygen-discharging means is increased by the oxygen-discharging capability-increasing means.

3. A concentration detector as set forth in claim 1 , further comprising concentration calculation means for calculating the concentration of a particular component in the gas based on a current generated

depending upon the oxygen concentration in the gas after oxygen is formed by the oxygen-forming means, and means for calculating a coefficient for correcting a calculation error in the concentration calculation means based on a current generated depending upon the oxygen concentration in the gas when the rate of increase of the oxygen concentration in the gas becomes greater than the predetermined rate before oxygen is formed by the oxygen-forming means.

4. A concentration detector as set forth in any one of claims 1 to 3, wherein the concentration detector is disposed in the exhaust gas passage which is for passing the exhaust gas emitted from the internal combustion engine, the gas is the exhaust gas emitted from the internal combustion engine, and when no fuel is supplied to the internal combustion engine, the rate of increase of the oxygen concentration in the gas becomes greater than the predetermined rate before oxygen is formed by the oxygen-forming means.

5. A concentration detector as set forth in any one of claims 1 to 4, wherein the particular component is one of nitrogen oxide and ammonia.

【特許請求の範囲】

【請求項１】　ガス中の特定成分であって分解されることによって酸素を生成する特定成分の濃度を該特定成分の分解時に生成される酸素の量に基づいて検出する濃度検出装置において、上記特定成分を分解して酸素を生成する酸素生成手段と、該酸素生成手段により酸素が生成される前にガス中の酸素を該ガスから排出する酸素排出手段と、上記酸素生成手段により酸素が生成される前のガス中の酸素濃度の上昇割合が予め定められた割合よりも大きくなるときに上記酸素排出手段の酸素排出能力を増大する酸素排出能力増大手段とを具備することを特徴とする濃度検出装置。

【請求項２】　上記酸素排出手段の酸素排出能力が該酸素排出手段に印加される電圧の値に応じて変化し、上記酸素排出能力増大手段による上記酸素排出手段の酸素排出能力の増大後、上記酸素排出手段に印加される電圧の値がガス中の酸素濃度に応じて制御され、該酸素排出能力増大手段による酸素排出手段の酸素排出能力の増大後に上記酸素排出手段に印加される電圧の値に基づいて上記酸素排出能力増大手段による酸素排出手段の酸素排出能力の増大の程度が決定されることを特徴とする請求項１に記載の濃度検出装置。

【請求項３】　上記酸素生成手段によって酸素が生成された後のガス中の酸素濃度に応じて発生する電流値に基づいてガス中の特定成分の濃度を算出する濃度算出手段と、上記酸素生成手段により酸素が生成される前のガス中の酸素濃度の上昇割合が予め定められた割合よりも大きくなるときに上記ガス中の酸素濃度に応じて発生する電流値に基づいて上記濃度算出手段における算出誤差を補正するための係数を算出する手段とを具備することを特徴とする請求項１に記載の濃度検出装置。

【請求項４】　当該濃度検出装置が内燃機関から排出される排気ガスを通すための排気通路に配置されており、上記ガスが内燃機関から排出される排気ガスであり、内燃機関に燃料が供給されないときに上記酸素生成手段により酸素が生成される前のガス中の酸素濃度の上昇割合が予め定められた割合よりも大きくなることを特徴とする請求項１～３のいずれか１つに記載の濃度検出装置。

【請求項５】　上記特定成分が窒素酸化物またはアンモニアであることを特

徴とする請求項１～４のいずれか１つに記載の濃度検出装置。

I. List of Required Documents

d. Information disclosure statement listing the documents cited in the JPO office action.

- Information List
- JP2003-294696 (Original(Japanese) & English abstract)
- JP2000-137018 (Original(Japanese) & English abstract)
- JP2004-198351 (Original(Japanese) & English abstract)

Information List (Form1)

US Serial No.	10/899,122
Our ref:	TYT-P169-US

The following is a List of References provided by Applicant Please file an information Disclosure Statement using this information

Document Number	Publication Date	Brief Explanation of Page(s) & Line(s) of Related Part(s)
JP2003-294696 A and English abstract thereof	October 15, 2003	This is cited in the JPO office action as the record of result of prior art search which dose not constitute a reason for rejection. See the English abstract.
JP2000-137018 A and English abstract thereof	May 16, 2000	This is cited in the JPO office action as the record of result of prior art search which dose not constitute a reason for rejection. See the English abstract.
JP2004-198351 A and English abstract thereof	July 15, 2004	This is cited in the JPO office action as the record of result of prior art search which dose not constitute a reason for rejection. See the English abstract.

UNITED STATES PATENT AND TRADEMARK OFFICE

Commissioner for Patents
United States Patent and Trademark Office
P.O. Box 1450
Alexandria, VA 22313-1450
www.uspto.gov

ANTONELLI, TERRY, STOUT & KRAUS, LLP
Suite 1800
1300 North Seventeenth Street
Arlington, VA 22209

In re U.S. Patent Application of	:	
Yoshihoroi SAKAYANAGI	:	DECISION ON REQUEST TO
Application No. 10/899122	:	PARTICIPATE IN PATENT
Filed: July, 27, 2004	:	PROSECUTION HIGHWAY
Attorney Docket No. 120553	:	PILOT PROGRAM AND PETITION
	:	TO MAKE SPECIAL UNDER
	:	37 CFR 1.102(d)

This is a decision on the request to participate in the Patent Prosecution Highway (PPH) pilot program and the petition under 37 CFR 1.102(d), filed November 14, 2006, to make the above-identified application special.

The request and petition are **GRANTED**.

A grantable request to participate in the PPH pilot program and petition to make special require:

(1) The U.S. application must validly claim priority under 35 U.S.C. 119(a) to one or more applications filed in the JPO;
(2) Applicant must submit a copy of the allowable/patentable claim(s) from the JPO application(s) along with an English translation thereof and a statement that the English translation is accurate;
(3) All the claims in the U.S. application must sufficiently correspond or be amended to sufficiently correspond to the allowable/patentable claim(s) in the JPO application(s);
(4) Examination of the U.S. application has not begun;
(5) Applicant must submit a copy of all the office actions from each of the JPO application(s) containing the allowable/patentable claim(s) along with an English translation thereof and a statement that the English translation is accurate;
(6) Applicant must submit an IDS listing the documents cited by the JPO examiner in the JPO office action along with copies of documents except U.S. patents or U.S. patent application publications; and
(7) The required petition fee under 37 CFR 1.17(h).

The request to participate in the PPH pilot program and petition comply with the above requirements. Accordingly, the above-identified application has been accorded "special" status.

Telephone inquiries concerning this decision should be directed to Kathryn Gorgos at 571 272-1012.

All other inquiries concerning the examination or status of the application is accessible in the PAIR system at http://www.uspto.gov/ebc/index.html.

The application is being forwarded to the examiner for action on the merits commensurate with this decision.

Kathryn Gorgos
TC 1700
TQAS

UNITED STATES PATENT AND TRADEMARK OFFICE

Commissioner for Patents
United States Patent and Trademark Office
P.O. Box 1450
Alexandria, VA 22313-1450
www.uspto.gov

OLIFF & BERRIDGE, PLC
P.O. Box 19928
Arlington, VA 22320

1-11-07

In re U.S. Patent Application of	:	
Yoshihoroi SAKAYANAGI	:	DECISION ON REQUEST TO
Application No. 10/899122	:	PARTICIPATE IN PATENT
Filed: July, 27, 2004	:	PROSECUTION HIGHWAY
Attorney Docket No. 120553	:	PILOT PROGRAM AND PETITION
	:	TO MAKE SPECIAL UNDER
	:	37 CFR 1.102(d)

This is a decision on the request to participate in the Patent Prosecution Highway (PPH) pilot program and the petition under 37 CFR 1.102(d), filed November 14, 2006, to make the above-identified application special.

The request and petition are **GRANTED**.

A grantable request to participate in the PPH pilot program and petition to make special require:

(1) The U.S. application must validly claim priority under 35 U.S.C. 119(a) to one or more applications filed in the JPO;
(2) Applicant must submit a copy of the allowable/patentable claim(s) from the JPO application(s) along with an English translation thereof and a statement that the English translation is accurate;
(3) All the claims in the U.S. application must sufficiently correspond or be amended to sufficiently correspond to the allowable/patentable claim(s) in the JPO application(s);
(4) Examination of the U.S. application has not begun;
(5) Applicant must submit a copy of all the office actions from each of the JPO application(s) containing the allowable/patentable claim(s) along with an English translation thereof and a statement that the English translation is accurate;
(6) Applicant must submit an IDS listing the documents cited by the JPO examiner in the JPO office action along with copies of documents except U.S. patents or U.S. patent application publications; and
(7) The required petition fee under 37 CFR 1.17(h).

The request to participate in the PPH pilot program and petition comply with the above requirements. Accordingly, the above-identified application has been accorded "special" status.

Telephone inquiries concerning this decision should be directed to Kathryn Gorgos at 571 272-1012.

All other inquiries concerning the examination or status of the application is accessible in the PAIR system at http://www.uspto.gov/ebc/index.html.

The application is being forwarded to the examiner for action on the merits commensurate with this decision.

Kathryn Gorgos
TC 1700
TQAS

UNITED STATES PATENT AND TRADEMARK OFFICE

Commissioner for Patents
United States Patent and Trademark Office
P.O. Box 1450
Alexandria, VA 22313-1450
www.uspto.gov

ANTONELLI, TERRY, STOUT & KRAUS, LLP
1300 NORTH SEVENTEENTH STREET
SUITE 1800
ARLINGTON VA 22209-9889

COPY MAILED

DEC 17 2004

OFFICE OF PETITIONS

In re Application of :
Murase et al. :
Application No. 10/899,147 : ON PETITION
Filed: July 27, 2004 :
Attorney Docket No.: 1213.44104X00 :

This is a decision on the petition filed November 22, 2004, requesting in effect, that a Notice of Omitted Parts in a Nonprovisional Application ("Notice") mailed June 27, 2003, be withdrawn.

The application was filed on July 27, 2004. However, on October 4, 2004, the Office of Initial Patent Examination (OIPE) mailed a Notice stating that the application had been accorded a filing date of July 27, 2004 but figures 8a-8c,described in the specification appeared to have been omitted.

In response, the present petition was filed wherein Petitioner contends figures 8a-8c were part of the application as filed on July 27, 2004 and as described in the specification. In support, the petition is accompanied by a copy of applicant's return postcard which lists 4 pages of drawings. The petition is further accompanied by 1 sheet of drawing containing figures 8a-8c.

Petitioner acknowledges there was a labeling error with figure 8. Figure 8 as filed was mislabeled since the figure included three distinct parts which have been labeled 8a-8c. It is obvious from the petition that no drawings were actually missing on July 27, 2004 and that applicant is not seeking to submit any additional drawings.

As such the Office was correct in issuing the Notice to the extent that figures 8a-8c appeared to be omitted and were mislabeled. Thus, petitioner is not entitled to a refund of the $130.00 petition fee (the current petition fee is $400.00).

The petition is Dismissed.

Effective November 22, 2004, the petition fee has increased to $400.00. Accordingly deposit account 01-2135 is being charged $270.00 to make up the difference of the new fee. See 1287 Off. Gaz. Pat Office 67 (October 12, 2004).

The application is being returned to the Office of Initial Patent Examination for further processing with a filing date of **July 27, 2004** using the 15 sheets of drawings received in the Office on July 27, 2004.

An amendment with replacement sheets of drawings in compliance with 37 CFR 1.121(d) is required in a nonprovisional application to renumber the drawing figures consecutively, if necessary, an amendment of the specification is required to correct the references to the drawing figures to correspond with any relabeled drawing figures, both in the brief and detailed descriptions of the drawings. Such amendment should be submitted as a preliminary amendment prior to the first Office action to avoid delays in the prosecution of the application.

Telephone inquiries related to this decision may be directed to the undersigned at (571) 272-3215.

Charlema R. Grant

Charlema R. Grant
Petition Attorney
Office of Petitions

UNITED STATES PATENT AND TRADEMARK OFFICE

Commissioner for Patents
United States Patent and Trademark Office
P.O. Box 1450
Alexandria, VA 22313-1450
www.uspto.gov

ANTONELLI, TERRY, STOUT & KRAUS, LLP
1300 NORTH SEVENTEENTH STREET
SUITE 1800
ARLINGTON, VA 22209-3873

MAILED

JUN 0 8 2006

TECHNOLOGY CENTER 2100

In re Application of: Murase, et al.
Application No. 10/899,147
Filed: July 27, 2004
For: SUSPENDING SCENARIO GENERATION METHOD, SERVER DEVICE AND PROGRAM THEREFOR

DECISION ON PETITION TO MAKE SPECIAL (ACCELERATED EXAMINATION) UNDER M.P.E.P. §708.02 (VIII)

This is a decision on the petition to make special under 37 C.F.R. §102(d) and M.P.E.P. §708.02(VIII): Accelerated Examination, filed on July 1, 2005.

The Petition is **GRANTED**.

M.P.E.P. §708.02, Section VIII which sets out the prerequisites for a grantable petition for Accelerated Examination under 37 C.F.R. §1.102(d) states in relevant part:

A new application (one which has not received any examination by the examiner) may be granted special status provided that applicant (and this term includes applicant's attorney or agent) complies with each of the following items:

(a) Submits a petition to make special accompanied by the fee set forth in 37 CFR 1.17(h);

(b) Presents all claims directed to a single invention, or if the Office determines that all the claims presented are not obviously directed to a single invention, will make an election without traverse as a prerequisite to the grant of special status;

(c) Submits a statement(s) that a pre-examination search was made, listing the field of search by class and subclass, publication, Chemical Abstracts, foreign patents, etc. The pre-examination search must be directed to the invention as claimed in the application for which special status is requested. A search made by a foreign patent office satisfies this requirement;

(d) Submits one copy each of the references deemed most closely related to the subject matter encompassed by the claims if said references are not already of record; and

(e) Submits a detailed discussion of the references, which discussion points out, with the particularity required by 37 CFR 1.111 (b) and (c), how the claimed subject matter is patentable over the references.

Petition to Make Special **GRANTED** since all of the requirements for special status under MPEP §708.02(VIII) have been met.

The application file is being forwarded to the Examiner for accelerated examination in accordance with M.P.E.P. §708.02, Section VIII. If the application is subsequently allowed, it will be given priority for printing. See M.P.E.P. §1309.

Brian L. Johnson
Special Program Examiner
Technology Center 2100
Computer Architecture, Software and Information Security
571-272-3595

UNITED STATES PATENT AND TRADEMARK OFFICE

COMMISSIONER FOR PATENTS
UNITED STATES PATENT AND TRADEMARK OFFICE
P.O. BOX 1450
ALEXANDRIA, VA 22313-1450
www.uspto.gov

Paul J. Skwierawski
ANTONELLI, TERRY, STOUT &
KRAUS, LLP
1300 North Seventeenth Street
Suite 1800
Arlington, VA 22209-3873

MAILED

SEP 2 8 2005

Technology Center 2100

In re Application of:
MAKI et al
Application No. 10/899,158
Filed: July 27, 2004
For: A COMPUTER SYSTEM AND A MANAGEMENT METHOD OF A COMPUTER SYSTEM

DECISION ON PETITION TO MAKE SPECIAL

This is a decision on the renewed petition, filed on July 14, 2005 under 37 C.F.R. §102(d) and M.P.E.P. § 708.02(VIII): Accelerated Examination, to make the above-identified application special.

The petition is **GRANTED**.

M.P.E.P. § 708.02, Section VIII which sets out the prerequisites for a grantable petition for Accelerated Examination under 37 C.F.R. § 102(d) states in relevant part:

> A new application (one which has not received any examination by the examiner) may be granted special status provided that applicant (and this term includes applicant's attorney or agent) complies with each of the following items:
>
> (A) Submits a petition to make special accompanied by the fee set forth in 37 CFR 1.17(h);
>
> (B) Presents all claims directed to a single invention, or if the Office determines that all the claims presented are not obviously directed to a single invention, will make an election without traverse as a prerequisite to the grant of special status;
>
> (C) Submits a statement(s) that a pre-examination search was made, listing the field of search by class and subclass, publication, Chemical Abstracts, foreign patents, etc. A search made by a foreign patent office satisfies this requirement;
>
> (D) Submits one copy each of the references deemed most closely related to the subject matter encompassed by the claims if said references are not already of record; and
>
> (E) Submits a detailed discussion of the references, which discussion points out, with the particularity required by 37 CFR 1.111 (b) and (c), how the claimed subject matter is patentable over the references.

> In those instances where the request for this special status does not meet all the prerequisites set forth above, applicant will be notified and the defects in the request will be stated. The application will remain in the status of a new application awaiting action in its regular turn. In those instances where a request is defective in one or more respects, applicant will be given one opportunity to perfect the request in a renewed petition to make special. If perfected, the request will then be granted. If not perfected in the first renewed petition, any additional renewed petitions to make special may or may not be considered at the discretion of the Group Special Program Examiner.

Applicant's submission of July 14, 2005 meets all the criteria set out above. Accordingly, the petition is **GRANTED**. The application file is being forwarded to the Examiner for accelerated examination in accordance with M.P.E.P. § 708.02. If the application is subsequently allowed, it will be given priority for printing. See M.P.E.P. § 1309.

Vincent N. Trans
Special Program Examiner
Technology Center 2100
Computer Architecture, Software, and
Information Security
571-272-3613

UNITED STATES PATENT AND TRADEMARK OFFICE

Commissioner for Patents
United States Patent and Trademark Office
P.O. Box 1450
Alexandria, VA 22313-1450
www.uspto.gov

ROBERT DEBERARDINE
ABBOTT LABORATORIES
100 ABBOTT PARK ROAD DEPT. 377/AP6A
ABBOTT PARK IL 60064-6008

COPY MAILED
OCT 1 8 2006
OFFICE OF PETITIONS

In re Application of Betschmann et al. Application No. 10/899,168 Filed: July 26, 2004 Attorney Docket No. 7099.US.02	: : : : :	DECISION ON PETITION

This is a decision on the petition under 37 CFR 1.137(b), filed April 3, 2006, to revive the above-identified application.

The above-identified application became abandoned for failure to file a timely response to the nonfinal Office Action, mailed June 28, 2005, which set a three-month shortened statutory period for reply. The above-identified application became abandoned on September 29, 2005. On January 10, 2006, the Office mailed a Notice of Abandonment.

Petitioner has met the requirements to revive the above-identified application pursuant to 37 CFR 1.137(b). Petitioner submitted the required reply, paid the petition fee, and made the proper statement of unintentional delay.

Accordingly, the petition is **granted.**

This matter is being referred to Technology Center Art Unit 1625 for further processing, as well as a decision on the request under 37 CFR 1.48 filed July 11, 2005.

Telephone inquiries specific to this decision may be directed to the undersigned at (571) 272-3211. All other inquiries concerning either the examination procedures or status of the application should be directed to the Technology Center.

C. T. Donnell

Christina Tartera Donnell
Senior Petitions Attorney
Office of Petitions

SPE RESPONSE FOR CERTIFICATE OF CORRECTION

DATE : 1-29-08

Paper No.: ____

TO SPE OF : ART UNIT 2800

SUBJECT : Request for Certificate of Correction on Patent No.: 7032819 (10/899179

A response is requested with respect to the accompanying request for a certificate of correction.

Please complete this form and return with file, within 7 days to:
Palm location **7580, Certificates of Correction Branch – South Tower – 9A22**
If response is for an IFW, **return to employee (named below) via PUBSCofC Team in MADRAS.**
With respect to the change(s) requested, correcting Office and/or Applicant's errors, should the patent read as shown in the certificate of correction (COCIN)? No new matter should be introduced, nor should the scope or meaning of the claims be changed.

Deletion of Inventor. Please reply A/S/A/P E. James

Thank You For Your Assistance

Certificates of Correction Branch
Tel. No. 703-308-9390 ext. 124

The request for issuing the above-identified correction(s) is hereby:
Note your decision on the appropriate box.

- ☐ **Approved** — All changes apply.
- ☐ **Approved in Part** — Specify below which changes **do not** apply.
- ☐ **Denied** — State the reasons for denial below.

Comments:

SPE

Art Unit

UNITED STATES PATENT AND TRADEMARK OFFICE

Commissioner for Patents
United States Patent and Trademark Office
P.O. Box 1450
Alexandria, VA 22313-1450
www.uspto.gov

SCHNECK & SCHNECK
P.O. BOX 2-E
SAN JOSE, CA 95109-0005

COPY MAILED

JUL 01 2009

OFFICE OF PETITIONS

In re Patent No. 7,249,202 :
Issue Date: July 24, 2007 :
Application No. 10/899,196 :
Filed: July 26, 2004 :
Attorney Docket No. CRA-029 :

ON PETITION

This is a decision on the request filed April 6, 2009, which is being treated as a petition under 37 CFR 3.81(b) to correct the name of the assignee on the front page of the above-identified patent by way of a certificate of correction.

The petition is **DISMISSED**.

Petitioner requests issuance of a certificate of correction in the name of "Cradle Technologies."

37 CFR 3.81(b), effective June 25, 2004, reads:

> *After payment of the issue fee:* Any request for issuance of an application in the name of the assignee submitted after the date of payment of the issue fee, and any request for a patent to be corrected to state the name of the assignee, must state that the assignment was submitted for recordation as set forth in § 3.11 **before issuance of the patent**, and must include a request for a certificate of correction under § 1.323 of this chapter (accompanied by the fee set forth in § 1.20(a) and the processing fee set forth in § 1.17(i) of this chapter [emphasis added]. *See also* MPEP 1481.01.

U.S. Patent and Trademark Office assignment records disclose that an assignment from Cradle Technologies, Inc. to Cradle Technologies was recorded on April 6, 2009, **after the date of issuance of this patent**. Accordingly, since the assignment was not submitted for recordation until after issuance of this patent, issuance of a certificate of correction would not be proper.

Telephone inquiries concerning this decision on petition should be directed to April M. Wise at (571) 272-1642.

/Carl Friedman/
Carl Friedman
Petitions Examiner
Office of Petitions

UNITED STATES PATENT AND TRADEMARK OFFICE

UNITED STATES DEPARTMENT OF COMMERCE
United States Patent and Trademark Office
Address: COMMISSIONER FOR PATENTS
P.O. Box 1450
Alexandria, Virginia 22313-1450
www.uspto.gov

APPLICATION NUMBER	FILING or 371(c) DATE	GRP ART UNIT	FIL FEE REC'D	ATTY.DOCKET.NO	TOT CLAIMS	IND CLAIMS
10/856,676	05/28/2004	3764	1788	13914.579.4.1	46	3

CONFIRMATION NO. 3341

CORRECTED FILING RECEIPT

22913
Workman Nydegger
1000 Eagle Gate Tower
60 East South Temple
Salt Lake City, UT 84111

OC000000036594274

Date Mailed: 06/22/2009

Receipt is acknowledged of this non-provisional patent application. The application will be taken up for examination in due course. Applicant will be notified as to the results of the examination. Any correspondence concerning the application must include the following identification information: the U.S. APPLICATION NUMBER, FILING DATE, NAME OF APPLICANT, and TITLE OF INVENTION. Fees transmitted by check or draft are subject to collection. Please verify the accuracy of the data presented on this receipt. **If an error is noted on this Filing Receipt, please submit a written request for a Filing Receipt Correction. Please provide a copy of this Filing Receipt with the changes noted thereon. If you received a "Notice to File Missing Parts" for this application, please submit any corrections to this Filing Receipt with your reply to the Notice. When the USPTO processes the reply to the Notice, the USPTO will generate another Filing Receipt incorporating the requested corrections**

Applicant(s)

Scott R. Watterson, Logan, UT;
William T. Dalebout, Logan, UT;
Darren C. Ashby, Richmond, UT;

Power of Attorney: The patent practitioners associated with Customer Number 022913

Domestic Priority data as claimed by applicant

This application is a CIP of 09/776,410 02/02/2001 PAT 6,997,852
which is a CIP of 09/641,220 08/18/2000 PAT 6,458,060
and is a CIP of 09/641,600 08/18/2000 PAT 7,060,006
and is a CIP of 09/641,627 08/18/2000 PAT 7,166,062
which is a CIP of 09/496,560 02/02/2000 PAT 6,447,424
and said 09/641,220 08/18/2000
is a CIP of 09/496,560 02/02/2000 PAT 6,447,424
and said 09/641,600 08/18/2000
is a CIP of 09/496,560 02/02/2000 PAT 6,447,424
and said 09/641,627 08/18/2000
is a CIP of 09/349,608 07/08/1999 PAT 6,312,363
and said 09/641,220 08/18/2000
is a CIP of 09/349,608 07/08/1999 PAT 6,312,363
and said 09/641,600 08/18/2000
is a CIP of 09/349,608 07/08/1999 PAT 6,312,363

Foreign Applications

If Required, Foreign Filing License Granted: 07/26/2004

The country code and number of your priority application, to be used for filing abroad under the Paris Convention, is **US 10/856,676**

Projected Publication Date: Request for Non-Publication Acknowledged

Non-Publication Request: Yes

Early Publication Request: No
Title

METHODS AND SYSTEMS FOR CONTROLLING AN EXERCISE APPARATUS USING A USB COMPATIBLE PORTABLE REMOTE DEVICE

Preliminary Class

482

PROTECTING YOUR INVENTION OUTSIDE THE UNITED STATES

Since the rights granted by a U.S. patent extend only throughout the territory of the United States and have no effect in a foreign country, an inventor who wishes patent protection in another country must apply for a patent in a specific country or in regional patent offices. Applicants may wish to consider the filing of an international application under the Patent Cooperation Treaty (PCT). An international (PCT) application generally has the same effect as a regular national patent application in each PCT-member country. The PCT process **simplifies** the filing of patent applications on the same invention in member countries, but **does not result** in a grant of "an international patent" and does not eliminate the need of applicants to file additional documents and fees in countries where patent protection is desired.

Almost every country has its own patent law, and a person desiring a patent in a particular country must make an application for patent in that country in accordance with its particular laws. Since the laws of many countries differ in various respects from the patent law of the United States, applicants are advised to seek guidance from specific foreign countries to ensure that patent rights are not lost prematurely.

Applicants also are advised that in the case of inventions made in the United States, the Director of the USPTO must issue a license before applicants can apply for a patent in a foreign country. The filing of a U.S. patent application serves as a request for a foreign filing license. The application's filing receipt contains further information and guidance as to the status of applicant's license for foreign filing.

Applicants may wish to consult the USPTO booklet, "General Information Concerning Patents" (specifically, the section entitled "Treaties and Foreign Patents") for more information on timeframes and deadlines for filing foreign patent applications. The guide is available either by contacting the USPTO Contact Center at 800-786-9199, or it can be viewed on the USPTO website at http://www.uspto.gov/web/offices/pac/doc/general/index.html.

For information on preventing theft of your intellectual property (patents, trademarks and copyrights), you may wish to consult the U.S. Government website, http://www.stopfakes.gov. Part of a Department of Commerce initiative, this website includes self-help "toolkits" giving innovators guidance on how to protect intellectual property in specific countries such as China, Korea and Mexico. For questions regarding patent enforcement issues, applicants may call the U.S. Government hotline at 1-866-999-HALT (1-866-999-4158).

LICENSE FOR FOREIGN FILING UNDER

Title 35, United States Code, Section 184

Title 37, Code of Federal Regulations, 5.11 & 5.15

GRANTED

The applicant has been granted a license under 35 U.S.C. 184, if the phrase "IF REQUIRED, FOREIGN FILING LICENSE GRANTED" followed by a date appears on this form. Such licenses are issued in all applications where the conditions for issuance of a license have been met, regardless of whether or not a license may be required as set forth in 37 CFR 5.15. The scope and limitations of this license are set forth in 37 CFR 5.15(a) unless an earlier license has been issued under 37 CFR 5.15(b). The license is subject to revocation upon written notification. The date indicated is the effective date of the license, unless an earlier license of similar scope has been granted under 37 CFR 5.13 or 5.14.

This license is to be retained by the licensee and may be used at any time on or after the effective date thereof unless it is revoked. This license is automatically transferred to any related applications(s) filed under 37 CFR 1.53(d). This license is not retroactive.

The grant of a license does not in any way lessen the responsibility of a licensee for the security of the subject matter as imposed by any Government contract or the provisions of existing laws relating to espionage and the national security or the export of technical data. Licensees should apprise themselves of current regulations especially with respect to certain countries, of other agencies, particularly the Office of Defense Trade Controls, Department of State (with respect to Arms, Munitions and Implements of War (22 CFR 121-128)); the Bureau of Industry and Security, Department of Commerce (15 CFR parts 730-774); the Office of Foreign AssetsControl, Department of Treasury (31 CFR Parts 500+) and the Department of Energy.

NOT GRANTED

No license under 35 U.S.C. 184 has been granted at this time, if the phrase "IF REQUIRED, FOREIGN FILING LICENSE GRANTED" DOES NOT appear on this form. Applicant may still petition for a license under 37 CFR 5.12, if a license is desired before the expiration of 6 months from the filing date of the application. If 6 months has lapsed from the filing date of this application and the licensee has not received any indication of a secrecy order under 35 U.S.C. 181, the licensee may foreign file the application pursuant to 37 CFR 5.15(b).

UNITED STATES PATENT AND TRADEMARK OFFICE

UNITED STATES DEPARTMENT OF COMMERCE
United States Patent and Trademark Office
Address: COMMISSIONER FOR PATENTS
P.O. Box 1450
Alexandria, Virginia 22313-1450
www.uspto.gov

APPL NO.	FILING OR 371 (c) DATE	ART UNIT	FIL FEE REC'D	ATTY.DOCKET NO	DRAWINGS	TOT CLMS	IND CLMS
10/899,197	07/25/2004	2615	2124	200300710-1	5	57	11

CONFIRMATION NO. 4160

CORRECTED FILING RECEIPT

OC000000014144788

022879
HEWLETT PACKARD COMPANY
P O BOX 272400, 3404 E. HARMONY ROAD
INTELLECTUAL PROPERTY ADMINISTRATION
FORT COLLINS, CO 80527-2400

Date Mailed: 10/20/2004

Receipt is acknowledged of this regular Patent Application. It will be considered in its order and you will be notified as to the results of the examination. Be sure to provide the U.S. APPLICATION NUMBER, FILING DATE, NAME OF APPLICANT, and TITLE OF INVENTION when inquiring about this application. Fees transmitted by check or draft are subject to collection. Please verify the accuracy of the data presented on this receipt. **If an error is noted on this Filing Receipt, please write to the Office of Initial Patent Examination's Filing Receipt Corrections, facsimile number 703-746-9195. Please provide a copy of this Filing Receipt with the changes noted thereon. If you received a "Notice to File Missing Parts" for this application, please submit any corrections to this Filing Receipt with your reply to the Notice. When the USPTO processes the reply to the Notice, the USPTO will generate another Filing Receipt incorporating the requested corrections (if appropriate).**

Applicant(s)

Cari Dorsh, McMinnville, OR;

Power of Attorney: The patent practitioners associated with Customer Number **022879**.

Domestic Priority data as claimed by applicant

Foreign Applications

If Required, Foreign Filing License Granted: 09/21/2004

The country code and number of your priority application, to be used for filing abroad under the Paris Convention, is US10/899,197

Projected Publication Date: 01/26/2006

Non-Publication Request: No

Early Publication Request: No

Title

Optically writing image data files and thumbnail images corresponding thereto to optical disc

Preliminary Class

386

LICENSE FOR FOREIGN FILING UNDER
Title 35, United States Code, Section 184
Title 37, Code of Federal Regulations, 5.11 & 5.15

GRANTED

The applicant has been granted a license under 35 U.S.C. 184, if the phrase "IF REQUIRED, FOREIGN FILING LICENSE GRANTED" followed by a date appears on this form. Such licenses are issued in all applications where the conditions for issuance of a license have been met, regardless of whether or not a license may be required as set forth in 37 CFR 5.15. The scope and limitations of this license are set forth in 37 CFR 5.15(a) unless an earlier license has been issued under 37 CFR 5.15(b). The license is subject to revocation upon written notification. The date indicated is the effective date of the license, unless an earlier license of similar scope has been granted under 37 CFR 5.13 or 5.14.

This license is to be retained by the licensee and may be used at any time on or after the effective date thereof unless it is revoked. This license is automatically transferred to any related applications(s) filed under 37 CFR 1.53(d). This license is not retroactive.

The grant of a license does not in any way lessen the responsibility of a licensee for the security of the subject matter as imposed by any Government contract or the provisions of existing laws relating to espionage and the national security or the export of technical data. Licensees should apprise themselves of current regulations especially with respect to certain countries, of other agencies, particularly the Office of Defense Trade Controls, Department of State (with respect to Arms, Munitions and Implements of War (22 CFR 121-128)); the Office of Export Administration, Department of Commerce (15 CFR 370.10 (j)); the Office of Foreign Assets Control, Department of Treasury (31 CFR Parts 500+) and the Department of Energy.

NOT GRANTED

No license under 35 U.S.C. 184 has been granted at this time, if the phrase "IF REQUIRED, FOREIGN FILING LICENSE GRANTED" DOES NOT appear on this form. Applicant may still petition for a license under 37 CFR 5.12, if a license is desired before the expiration of 6 months from the filing date of the application. If 6 months has lapsed from the filing date of this application and the licensee has not received any indication of a secrecy order under 35 U.S.C. 181, the licensee may foreign file the application pursuant to 37 CFR 5.15(b).

UNITED STATES PATENT AND TRADEMARK OFFICE

Commissioner for Patents
United States Patent and Trademark Office
P.O. Box 1450
Alexandria, VA 22313-1450
www.uspto.gov

POLLACK, P.C.
THE CHRYSLER BUILDING
132 EAST 43RD STREET, SUITE 760
NEW YORK, NY 10017

COPY MAILED

APR 0 9 2009

OFFICE OF PETITIONS

In re Application of	:	
Stefano **PEDEMONTE**	:	
Application No. 10/899,198	:	DECISION GRANTING PETITION
Filed: July 26, 2004	:	UNDER 37 CFR 1.313(c)(2)
Attorney Docket No. **1014.1036**	:	

This is a decision on the petition under 37 CFR 1.313(c)(2), filed April 6, 2009, to withdraw the above-identified application from issue after payment of the issue fee.

The petition is **GRANTED**.

The above-identified application is withdrawn from issue for consideration of a submission under 37 CFR 1.114 (request for continued examination). *See* 37 CFR 1.313(c)(2).

Petitioner is advised that the issue fee paid on February 20, 2009 cannot be refunded. If, however, this application is again allowed, petitioner may request that it be applied towards the issue fee required by the new Notice of Allowance.[1]

Telephone inquiries should be directed to the undersigned at (571) 272-7253.

This application is being referred to Technology Center AU 3771 for processing of the request for continued examination under 37 CFR 1.114 and for consideration of the amendment received by the Office on February 20, 2009.

/Monica A. Graves/
Petitions Examiner, Office of Petitions

---

[1] *The request to apply the issue fee to the new Notice may be satisfied by completing and returning the new Part B – Fee(s) Transmittal Form (along with any balance due at the time of submission). Petitioner is advised that the Issue Fee Transmittal Form* ***must*** *be completed and timely submitted to avoid abandonment of the application.*

SPE RESPONSE FOR CERTIFICATE OF CORRECTION

Paper No.: _____

DATE : 4-8-09

TO SPE OF : ART UNIT 3771

SUBJECT : Request for Certificate of Correction for Appl. No.: 10/899203 Patent No.: 7347206

Please respond to this request for a certificate of correction within 7 days.

FOR IFW FILES:

Please review the requested changes/corrections as shown in the COCIN document(s) in the IFW application image. No new matter should be introduced, nor should the scope or meaning of the claims be changed.

Please complete the response (see below) and forward the completed response to scanning using document code COCX.

FOR PAPER FILES:

Please review the requested changes/corrections as shown in the attached certificate of correction. Please complete this form (see below) and forward it with the file to:

Certificates of Correction Branch (CofC)
South Tower - 9A22
Palm Location 7580

Should request be granted?

E. James
Certificates of Correction Branch
703-308-9390 ext. _____

Thank You For Your Assistance

The request for issuing the above-identified correction(s) is hereby:
Note your decision on the appropriate box.

- ☐ **Approved** — All changes apply.
- ☐ **Approved in Part** — Specify below which changes **do not** apply.
- ☑ **Denied** — State the reasons for denial below.

Comments: See attachments.

Justine Yu
SPE

3771
Art Unit

10/899,203

Response to the Requested Certification of Correction

On 3/12/09, Attorney Grant E. Pollack filed a Request for Certificate of Correction and Accompanying Statement. The Request includes Exhibits A - D, and Form PTO/SB/44.

1) On page 3, lines 1-2 of the Request, applicant's representative states that "written Response to Rule 312 Communication was clearly misleading as to what had been "entered in part".

Following is a copy from the Response to Rule 312 Communication mailed 2/21/08:

e) ☒ entered in part. See explanation below.

Amendment to claim filed on 1/16/08 better defines the invention without limiting effect. Amendment to claims will be entered.

Amendment to specification filed on 1/16/08 however will not be entered because amendment to page 5 second paragraph changes the shape of the leaver from "fork shaped" to --generally fork shaped--, which raise the issues of new matter. The word "generally" broadens shape of the lever, and does not limit the shape to fork shape. Thus, amendment to specification does not support "fork shaped" of the claimed invention because "fork shaped" and "generally fork shaped" may have different structures.

It is clear from the record that the amendments to the claims were entered; but the amendments to the Specification were not.

2) On page 3, the first two full paragraphs of the Request, Applicant's representative indicated that Exhibit C is a Corrected Specification in which the terms "generally" and "relatively" have been deleted.

Applicant's Exhibit C appears to be a substitute specification which has been presented for the first time and not in compliance with the Patent Rules. Applicant's representative is reminded of the proper procedure for presenting a substitute specification in accordance of 37 CFR 1.125.

§ 1.125 Substitute specification.

(a) If the number or nature of the amendments or the legibility of the application papers renders it difficult to consider the application, or to arrange the papers for printing or copying, the Office may require the entire specification, including the claims, or any part thereof, be rewritten.

(b) Subject to § 1.312, a substitute specification, excluding the claims, may be filed at any point up to payment of the issue fee if it is accompanied by a statement that the substitute specification includes no new matter.

(c) A substitute specification submitted under this section must be submitted with markings showing all the changes relative to the immediate prior version of the specification of record. The text of any added subject matter must be shown by underlining the added text. The text of any deleted matter must be shown by strike-through except that double brackets placed before and after the deleted characters may be used to show deletion of five or fewer consecutive characters. The text of any deleted subject matter must be shown by being placed within double brackets if strike-through cannot be easily perceived. An accompanying clean version (without markings) must also be supplied. Numbering the paragraphs of the specification of record is not considered a change that must be shown pursuant to this paragraph.

(d) A substitute specification under this section is not permitted in a reissue application or in a reexamination proceeding.

Furthermore, the substitute specification in Exhibit C appears to have numerous instances of new matter; for example, on page 1, lines 3-4, replacing "a group for control of a second stage regulator for scuba divers" to --devices for underwater activities or the like -- changed the scope of the invention; in line 10, applicant removed the admitted prior art phrase "of the known type".

3) On page 4, lines 9 - 12 of the Request, Applicant's representative states that " in the Abstract and in the Specification, such changes were incorrectly applied by the Junior Examiner, namely, to the wrong version of the Claims, Abstract and Specification - what was originally filed by Applicant rather than as amended subsequently by Applicant."

According to the Examiner's amendment mailed 10/3/07, amendment to the specification was correctly applied to the FIELD OF THE INVENTION, OBJECTS AND SUMMARY OF THE INVENTION as presented in the Preliminary amendment filed 7/26/04, and was correctly applied to the originally filed OBJECTS AND SUMMARY OF THE INVENTION.

It is found that the Examiner's amendment to the OBJECTS AND SUMMARY OF THE INVENTION, lines 30 and 31 of the preliminary amendment was incorrect because the latest amendment filed 10/26/05 changed the term "for connection" to --to connect --. However, column 2, line 44 of the printed patent 7,347,206 has the phrase "for connecting".

4) On page 4, the last paragraph of the Request, Applicant's representative requested a Certificate of Correction to be issued. However, the Request in PTO/SB/44 Form indicates:

> It is certified that an error appears or errors appear in the above-identified patent and that said Letters Patent is hereby corrected as shown below:
>
> See attached Corrected Specification, Abstract and Claims.

The requested correction is unclear because the location of the error(s) in the printed patent has not been identified on form PTO/SB/44. See MPEP 1480 and 1485.

Conclusion:

The Request for issuing a Certificate of Correction filed 3/12/09 has been denied.

If applicant wishes to change the term "for connecting" in column 2, line 44 of the patent back to --to connect-- as indicated on page 2, line 9 of the amendment filed 10/26/05, Applicant's representative is advised to submit a written request for this specific correction to be made.

Any inquiry concerning this communication or earlier communications from the examiner should be directed to Justine R. Yu whose telephone number is (571) 272-4835. The examiner can normally be reached on Monday-Thursday from 8:30 am to 6:00 pm. The examiner can also be reached on alternate Fridays.

The fax phone number for the organization where this application or proceeding is assigned is 571-273-8300.

Justine R Yu
Supervisory Patent Examiner, AU3771

UNITED STATES PATENT AND TRADEMARK OFFICE

UNITED STATES DEPARTMENT OF COMMERCE
United States Patent and Trademark Office
Address: COMMISSIONER FOR PATENTS
P.O. Box 1450
Alexandria, Virginia 22313-1450
www.uspto.gov

APPLICATION NO.	FILING DATE	FIRST NAMED INVENTOR	ATTORNEY DOCKET NO.	CONFIRMATION NO.
10/899,203	07/26/2004	Stefano Pedemonte	1014.1037	4186

41226 7590 05/14/2009
POLLACK, P.C.
THE CHRYSLER BUILDING
132 EAST 43RD STREET, SUITE 760
NEW YORK, NY 10017

EXAMINER
ALI, SHUMAYA B

ART UNIT	PAPER NUMBER
3771	

MAIL DATE	DELIVERY MODE
05/14/2009	PAPER

Please find below and/or attached an Office communication concerning this application or proceeding.

The time period for reply, if any, is set in the attached communication.

UNITED STATES DEPARTMENT OF COMMERCE
U.S. Patent and Trademark Office
Address: COMMISSIONER FOR PATENTS
P.O. Box 1450
Alexandria, Virginia 22313-1450

APPLICATION NO./ CONTROL NO.	FILING DATE	FIRST NAMED INVENTOR / PATENT IN REEXAMINATION	ATTORNEY DOCKET NO.
10/899,203			

EXAMINER

ART UNIT	PAPER
3771	20090511

DATE MAILED:

Please find below and/or attached an Office communication concerning this application or proceeding.

Commissioner for Patents

Response to the Requested Certification of Correction

On 3/12/09, Attorney Grant E. Pollack filed a Request for Certificate of Correction and Accompanying Statement. The Request includes Exhibits A - D, and Form PTO/SB/44.

1) On page 3, lines 1-2 of the Request, applicant's representative states that "written Response to Rule 312 Communication was clearly misleading as to what had been "entered in part".

Following is a copy from the Response to Rule 312 Communication mailed 2/21/08:

> Amendment to claim filed on 1/16/08 better defines the invention without limiting effect. Amendment to claims will be entered.
> Amendment to specification filed on 1/16/08 however will not be entered because amendment to page 5 second paragraph changes the shape of the leaver from "fork shaped" to --generally fork shaped--, which raise the issues of new matter. The word "generally" broadens shape of the lever, and does not limit the shape to fork shape. Thus, amendment to specification does not support "fork shaped" of the claimed invention because "fork shaped" and "generally fork shaped" may have different structures.

It is clear from the record that the amendments to the claims were entered; but the amendments to the Specification were not.

2) On page 3, the first two full paragraphs of the Request, Applicant's representative indicated that Exhibit C is a Corrected Specification in which the terms "generally" and "relatively" have been deleted.

Applicant's Exhibit C appears to be a substitute specification which has been presented for the first time and not in compliance with the Patent Rules. Applicant's representative is reminded of the proper procedure for presenting a substitute specification in accordance of 37 CFR 1.125.

§ 1.125 Substitute specification.
(a) If the number or nature of the amendments or the legibility of the application papers renders it difficult to consider the application, or to arrange the papers for printing or copying, the Office may require the entire specification, including the

claims, or any part thereof, be rewritten.
(b) Subject to § 1.312, a substitute specification, excluding the claims, may be filed at any point up to payment of the issue fee if it is accompanied by a statement that the substitute specification includes no new matter.
(c) A substitute specification submitted under this section must be submitted with markings showing all the changes relative to the immediate prior version of the specification of record. The text of any added subject matter must be shown by underlining the added text. The text of any deleted matter must be shown by strike-through except that double brackets placed before and after the deleted characters may be used to show deletion of five or fewer consecutive characters. The text of any deleted subject matter must be shown by being placed within double brackets if strike-through cannot be easily perceived. An accompanying clean version (without markings) must also be supplied. Numbering the paragraphs of the specification of record is not considered a change that must be shown pursuant to this paragraph.
(d) A substitute specification under this section is not permitted in a reissue application or in a reexamination proceeding.

Furthermore, the substitute specification in Exhibit C appears to have numerous instances of new matter; for example, on page 1, lines 3-4, replacing "a group for control of a second stage regulator for scuba divers" to --devices for underwater activities or the like -- changed the scope of the invention; in line 10, applicant removed the admitted prior art phrase "of the known type".

3) On page 4, lines 9 - 12 of the Request, Applicant's representative states that " in the Abstract and in the Specification, such changes were incorrectly applied by the Junior Examiner, namely, to the wrong version of the Claims, Abstract and Specification - what was originally filed by Applicant rather than as amended subsequently by Applicant."

According to the Examiner's amendment mailed 10/3/07, amendment to the specification was correctly applied to the FIELD OF THE INVENTION, OBJECTS AND SUMMARY OF THE INVENTION as presented in the Preliminary amendment filed 7/26/04, and was correctly applied to the originally filed OBJECTS AND SUMMARY OF THE INVENTION.

It is found that the Examiner's amendment to the OBJECTS AND SUMMARY OF THE INVENTION, lines 30 and 31 of the preliminary amendment was incorrect because the latest amendment filed 10/26/05 changed the term "for connection" to --to connect --. However, column 2, line 44 of the printed patent 7,347,206 has the phrase "for connecting".

4) On page 4, the last paragraph of the Request, Applicant's representative requested a Certificate of Correction to be issued. However, the Request in PTO/SB/44 Form indicates:

> It is certified that an error appears or errors appear in the above-identified patent and that said Letters Patent is hereby corrected as shown below:
> See attached Corrected Specification, Abstract and Claims.

The requested correction is unclear because the location of the error(s) in the printed patent has not been identified on form PTO/SB/44. See MPEP 1480 and 1485.

Conclusion:

The Request for issuing a Certificate of Correction filed 3/12/09 has been denied.

If applicant wishes to change the term "for connecting" in column 2, line 44 of the patent back to --to connect-- as indicated on page 2, line 9 of the amendment filed 10/26/05, Applicant's representative is advised to submit a written request for this specific correction to be made.

Any inquiry concerning this communication or earlier communications from the examiner should be directed to Justine R. Yu whose telephone number is (571) 272-4835. The examiner can normally be reached on Monday-Thursday from 8:30 am to 6:00 pm. The examiner can also be reached on alternate Fridays.
The fax phone number for the organization where this application or proceeding is assigned is 571-273-8300.

/Justine R Yu/
Supervisory Patent Examiner, Art Unit 3771

Justine R Yu
SPE
Art Unit: 3771

PTO-90C (Rev.04-03)

9-24-09

UNITED STATES DEPARTMENT OF COMMERCE
Patent and Trademark Office
ASSISTANT SECRETARY OF COMMERCE AND
COMMISSIONER OF PATENTS AND TRADEMARKS
Washington, D.C. 20231

Re: Patent No: 7,347,206
Appl. No. : 10/899,203
Inventor(s): Stefano Pedemonte
Issued: March 25, 2008

Re: Request for Certificate of Correction

Consideration has been given your request for the issuance of a certificate of correction for the above-identified patent under the provisions of Rule 1.323.

Respecting the alleged errors to your request, correction to Specification, Abstract and Claims, please (see attachment.)

In view of the foregoing, your request is denied.

Eva James
For Mary Diggs
Decisions & Certificates
of Correction Branch
(703) 756-1583 or 1580

Pollack, P.C.
132 East 43rd Street, Ste 760
New York, New York 10017

ej

SPE RESPONSE FOR CERTIFICATE OF CORRECTION

DATE : 10-15-09 Paper No.: _____

TO SPE OF : ART UNIT 3771

SUBJECT : Request for Certificate of Correction for Appl. No.: 10/899703 Patent No.: 7347206

Please respond to this request for a certificate of correction within 7 days.

FOR IFW FILES:

Please review the requested changes/corrections as shown in the **COCIN** document(s) in the IFW application image. No new matter should be introduced, nor should the scope or meaning of the claims be changed.

Please complete the response (see below) and forward the completed response to scanning using document code **COCX**.

FOR PAPER FILES:

Please review the requested changes/corrections as shown in the attached certificate of correction. Please complete this form (see below) and forward it with the file to:

Certificates of Correction Branch (CofC)
South Tower - 9A22
Palm Location 7580

Should Req. be entered? Please reply A/S/A/P

E. James
Certificates of Correction Branch
703-308-9390 ext. _____

Thank You For Your Assistance

The request for issuing the above-identified correction(s) is hereby:
Note your decision on the appropriate box.

- ☑ **Approved** — All changes apply.
- ☐ **Approved in Part** — Specify below which changes **do not** apply.
- ☐ **Denied** — State the reasons for denial below.

Comments: _____

SPE

AU3771
Art Unit

UNITED STATES PATENT AND TRADEMARK OFFICE

UNITED STATES DEPARTMENT OF COMMERCE
United States Patent and Trademark Office
Address: COMMISSIONER FOR PATENTS
P.O. Box 1450
Alexandria, Virginia 22313-1450
www.uspto.gov

APPL NO.	FILING OR 371 (c) DATE	ART UNIT	FIL FEE REC'D	ATTY.DOCKET NO	DRAWINGS	TOT CLMS	IND CLMS
10/899,206	07/25/2004	2111	942	JP920040064US1	5	20	5

CONFIRMATION NO. 4156

CORRECTED FILING RECEIPT

OC000000014144841

23441
LAW OFFICES OF MICHAEL DRYJA
704 228TH AVENUE NE
PMB 694
SAMMAMISH, WA 98074

Date Mailed: 10/20/2004

Receipt is acknowledged of this regular Patent Application. It will be considered in its order and you will be notified as to the results of the examination. Be sure to provide the U.S. APPLICATION NUMBER, FILING DATE, NAME OF APPLICANT, and TITLE OF INVENTION when inquiring about this application. Fees transmitted by check or draft are subject to collection. Please verify the accuracy of the data presented on this receipt. **If an error is noted on this Filing Receipt, please write to the Office of Initial Patent Examination's Filing Receipt Corrections, facsimile number 703-746-9195. Please provide a copy of this Filing Receipt with the changes noted thereon. If you received a "Notice to File Missing Parts" for this application, please submit any corrections to this Filing Receipt with your reply to the Notice. When the USPTO processes the reply to the Notice, the USPTO will generate another Filing Receipt incorporating the requested corrections (if appropriate).**

Applicant(s)

Kazuo Fujii, Yokohama, JAPAN;
Takayuki Katoh, Yokohama, JAPAN;
Ken Sasaki, Yamato-shi, JAPAN;

Power of Attorney:

JOSEPH C. REDMOND JR.–18753
Stanley Green–24351
JOHN E. HOEL–26279
Christopher Hughes–26914
Pryor Garnett–32136
William B. Porter III–33135
Michael Dryja–39662

Domestic Priority data as claimed by applicant

Foreign Applications

If Required, Foreign Filing License Granted: 09/21/2004

The country code and number of your priority application, to be used for filing abroad under the Paris Convention, is US10/899,206

Projected Publication Date: 01/26/2006

Non-Publication Request: No

Early Publication Request: No

Title

Controlling enablement and disablement of computing device component

Preliminary Class

710

LICENSE FOR FOREIGN FILING UNDER
Title 35, United States Code, Section 184
Title 37, Code of Federal Regulations, 5.11 & 5.15

GRANTED

The applicant has been granted a license under 35 U.S.C. 184, if the phrase "IF REQUIRED, FOREIGN FILING LICENSE GRANTED" followed by a date appears on this form. Such licenses are issued in all applications where the conditions for issuance of a license have been met, regardless of whether or not a license may be required as set forth in 37 CFR 5.15. The scope and limitations of this license are set forth in 37 CFR 5.15(a) unless an earlier license has been issued under 37 CFR 5.15(b). The license is subject to revocation upon written notification. The date indicated is the effective date of the license, unless an earlier license of similar scope has been granted under 37 CFR 5.13 or 5.14.

This license is to be retained by the licensee and may be used at any time on or after the effective date thereof unless it is revoked. This license is automatically transferred to any related applications(s) filed under 37 CFR 1.53(d). This license is not retroactive.

The grant of a license does not in any way lessen the responsibility of a licensee for the security of the subject matter as imposed by any Government contract or the provisions of existing laws relating to espionage and the national security or the export of technical data. Licensees should apprise themselves of current regulations especially with respect to certain countries, of other agencies, particularly the Office of Defense Trade Controls, Department of State (with respect to Arms, Munitions and Implements of War (22 CFR 121-128)); the Office of Export Administration, Department of Commerce (15 CFR 370.10 (j)); the Office of Foreign Assets Control, Department of Treasury (31 CFR Parts 500+) and the Department of Energy.

NOT GRANTED

No license under 35 U.S.C. 184 has been granted at this time, if the phrase "IF REQUIRED, FOREIGN FILING LICENSE GRANTED" DOES NOT appear on this form. Applicant may still petition for a license under 37 CFR 5.12, if a license is desired before the expiration of 6 months from the filing date of the application. If 6 months has lapsed from the filing date of this application and the licensee has not received any indication of a secrecy order under 35 U.S.C. 181, the licensee may foreign file the application pursuant to 37 CFR 5.15(b).

UNITED STATES PATENT AND TRADEMARK OFFICE

Commissioner for Patents
United States Patent and Trademark Office
P.O. Box 1450
Alexandria, VA 22313-1450
www.uspto.gov

COPY MAILED

DEC 30 2009

OFFICE OF PETITIONS

WILSON, SONSINI, GOODRICH & ROSATI
650 PAGE MILL ROAD
PALO ALTO CA 94304-1050

In re Application of	:	
David M. Preston et al.	:	
Application No. 10/899,213	:	ON PETITION
Filed: July 26, 2004	:	
Attorney Docket No. 35117-704.201	:	

This is a decision on the petition under the unintentional provisions of 37 CFR 1.137(b), filed October 22, 2009, to revive the above-identified application.

The petition is **GRANTED**.

The application became abandoned for failure to timely file a reply within the meaning of 37 CFR 1.113 to the final Office action of March 25, 2009. The proposed reply required for consideration of a petition to revive must be a Notice of Appeal (and appeal fee required by 37 CFR 41.20(b)(2), an amendment that *prima facie* places the application in condition for allowance, a Request for Continued Examination and submission (37 CFR 1.114), or the filing of a continuing application under 37 CFR 1.53(b). See MPEP 711.03(c)(II)(A)(2). A three month extension of time was obtained. Accordingly, the date of abandonment of this application is September 26, 2009. A reply was received but was not proper. A Notice of Abandonment was mailed on December 4, 2009.

The petition satisfies the requirements of 37 CFR 1.137(b) in that petitioner has supplied (1) the reply in the form of a RCE (Request for Continued Examination), with the required fee of $405, (2) the petition fee of $810, and (3) a proper statement of unintentional delay. Accordingly, the RCE is accepted as being unintentionally delayed.

Telephone inquiries concerning this decision should be directed to Kimberly Inabinet at (571) 272-4618.

This application is being referred to Technology Center AU 1618 for processing of the RCE and any action that is required by the Examiner in the normal course of business.

Carl Friedman
Petitions Examiner
Office of Petitions

UNITED STATES PATENT AND TRADEMARK OFFICE

Commissioner for Patents
United States Patent and Trademark Office
P.O. Box 1450
Alexandria, VA 22313-1450
www.uspto.gov

AKERMAN SENTERFITT
P.O. BOX 3188
WEST PALM BEACH FL 33402-3188

COPY MAILED

SEP 28 2007

OFFICE OF PETITIONS

In re Application of

Gustavo M. Gonzalez

Application No. 10/899,216

Filed: July 26, 2004

Attorney Docket No. 3919.005

DECISION ON PETITION

This is a decision on the petition under 37 CFR 1.137(b), filed March 20, 2007, which will be treated as petition under 37 CFR 1.181(a) to withdraw the holding of abandonment.

The petition under 37 CFR 1.181(a) to withdraw the holding of abandonment is **granted**.

This application was held abandoned on June 25, 2006, after it was believed that no response was received to the non-final Office action mailed March 24, 2006. The notice allowed a shortened statutory period for reply of three (3) months from its mailing date. Extensions of the time set for reply were available pursuant to 37 CFR 1.136(a). A Notice of Abandonment was mailed on October 27, 2006, indicating that a reply to the non-final Office action was not received.

A review of the application file reveals that an amendment was filed on September 22, 2006, with a request for an extension of time within the third month. Based on the aforementioned, it appears that the application was improperly held abandoned as a proper response was received prior to expiration of the period for reply. The holding of abandonment is withdrawn, accordingly.

Further inquires regarding this decision may be directed to the undersigned at (571) 272-3222.

The application file is being forwarded Technology Center 1700, GAU 1751 for further processing.

Kenya A. McLaughlin
Petitions Attorney
Office of Petitions

UNITED STATES PATENT
AND TRADEMARK OFFICE

Commissioner for Patents
United States Patent and Trademark Office
P.O. Box 1450
Alexandria, VA 22313-1450
www.uspto.g

Date Mailed: February 5, 2010
Patent No. :7,582,472B2
Ser. No. :10/899217
Issued : September 1, 2009
Inventor(s) : Kenneth E. Smith, et al..
Title :APPARATUS AND METHOD FOR LIQUID SAMPLE TESTING

Request for Certificate of Correction

Consideration has been given your request for the issuance of a certificate of correction for the above-identified patent under the provisions of Rule(s) 1.322 and/or 1.323.

Assignees' names and addresses (assignment data, attorney agent/firm) printed in a patent, are based *solely* on information supplied in the appropriate space for identifying the assignment data, i.e., item 3 of the Issue Fee Transmittal Form PTOL-85B. Granting of a request under 37 CFR 3.81(b) is required to correct applicant's error providing ***incorrect or erroneous*** assignment data, *before* issuance of a Certificate of Correction, under 37 CFR 1.323 *(see Manual of Patent Examining Procedures (M.P.E.P) Chp.1400, sect. 1481).* This procedure is required *at any time after the issue fee is paid*, including after issuance of the patent.

In view of the foregoing, your request is hereby denied.

A request to correct the Assignee under 37 CFR 3.81(b) should include:

A. **the processing fee set forth in 37 CFR 1.117(h) (currently $130);**
B. a statement that the failure to include the correct assignee name on the PTOL-85B was inadvertent; and
C. a copy of the Notice of Recordation of Assignment Document, reflecting the reel and frame number where the assignment(s) is recorded and/or reflecting proof of *the date* the assignment was submitted for recordation.

In the Request, Applicant(s) may request that the file be forwarded to Certificates of Correction Branch, for issuance of a Certificate of Correction, if the Request is granted.

Any request under 37 CFR 3.81(b) should be directed to the following address or facsimile number:

By mail: Mail Stop PETITIONS
Commissioner for Patents
Post Office Box 1450
Alexandria, VA 22313-1450

Commissioner for Patents
Post Office Box 1450
Alexandria, VA 22313-1450

By hand Customer Service Window
Mail Stop Petitions
Randolph Building
401 Dulany Street
Alexandria, VA 22314

By fax: 571-273-8300
ATTN: Office of Petitions

If a fee (currently $100) was previously submitted for consideration of a Request for Certificate of Correction, under CFR 1.323, to correct assignment data, no additional fee is required.

Magdalene Talley
For Mary Francis Diggs, Supervisor
Decisions and Certificate
Of Correction Branch
(703)571-0423
Fax (571) -270-9942

Carter, DeLuca, Farrell & Schmidt, LLP
Westridge Business Pk.
445 Broad Hollow Rd., Ste. 420
Melville, NY 11747

CBN/mt

UNITED STATES PATENT AND TRADEMARK OFFICE

COMMISSIONER FOR PATENTS
UNITED STATES PATENT AND TRADEMARK OFFICE
P.O. BOX 1450
ALEXANDRIA, VA 22313-1450
www.uspto.gov

AUTOLIV ASP
3350 AIRORT ROAD
OGDEN UT 84405

COPY MAILED

JUN 11 2008

OFFICE OF PETITIONS

In re Application of :
Miguel Sanchez, et al. :
Application No. 10/899,229 :
Filed: July 26, 2004 :
Attorney Docket No. 11721-042 :

ON PETITION

This is a decision in response to the petition under 37 CFR 1.137(b), filed March 5, 2008, to revive the above-identified application.

The petition is **GRANTED**.

The application became abandoned for failure to timely file a reply within the meaning of 37 CFR 1.113 to the final Office action of March 15, 2007. The proposed reply required for consideration of a petition to revive must be a Notice of Appeal (and appeal fee required by 37 CFR 41.20(b)(2), an amendment that *prima facie* places the application in condition for allowance, a Request for Continued Examination and submission (37 CFR 1.114), or the filing of a continuing application under 37 CFR 1.53(b). See MPEP 711.03(c)(II)(A)(2). A Notice of Abandonment was mailed on October 25, 2007. In response, on March 5, 2008, the present petition was filed, along with a Request for Continued Examination (RCE) and a 3-month petition for extension of time.

An extension of time under 37 CFR 1.136 must be filed prior to the expiration of the maximum extendable period for reply. *See* In re Application of S., 8 USPQ2d 1630, 1631 (Comm'r Pats. 1988). Since the $1,050 extension of time fee submitted with the petition on March 5, 2008 was subsequent to the maximum extendable period for reply, this fee is unnecessary and will be credited to petitioner's deposit account.

The present petition satisfies the requirements of 37 CFR 1.137(b) in that petitioner has supplied (1) the reply in the form of a RCE under 37 CFR 1.114 and fee of $810; (2) the petition fee of $1,540; and (3) an adequate statement of unintentional delay.

The file does not indicate a change of address has been submitted, although the address given on the petition differs from the address of record. If appropriate, a change of address should be filed in accordance with MPEP 601.03. A courtesy copy of this decision is being mailed to the address given on the petition; however, the Office will mail all future correspondence solely to the address of record.

This application is being referred to Technology Center AU 3616 for processing of the RCE and for appropriate action by the Examiner in the normal course of business on the amendment filed in accordance with 37 CFR 1.114.

Telephone inquiries concerning this decision should be directed to the undersigned at (571) 272-3204. Inquiries relating to further prosecution should be directed to the Technology Center.

Sherry D. Brinkley
Petitions Examiner
Office of Petitions

cc: ERIC J. SOSENKO
BRINKS HOFER GILSON & LIONE
P.O. BOX 10395
CHICAGO, IL 60620

UNITED STATES PATENT AND TRADEMARK OFFICE

Commissioner for Patents
United States Patent and Trademark Office
P.O. Box 1450
Alexandria, VA 22313-1450
www.uspto.gov

ARCHIBALD LLC
25 MALL ROAD
SUITE 300
BURLINGTON MA 01803

MAILED

JUN 16 2010

OFFICE OF PETITIONS

In re Application of	:	
Garboski et al.	:	
Application No. 10/899,239	:	DECISION ON PETITION
Filed: July 26, 2004	:	
Attorney Docket No. 03-050-DG	:	

This is a decision on the petition under the unintentional provisions of 37 CFR 1.137(b), filed May 11, 2010, to revive the above-identified application.

The petition is **GRANTED**.

This application became abandoned for failure to reply in a timely manner to the final Office action mailed October 31, 2007. No extensions of time under the provisions of 37 CFR 1.136(a) were obtained. Accordingly, this application became abandoned on February 1, 2008. A Notice of Abandonment was mailed May 16, 2008.

The petition satisfies the requirements of 37 CFR 1.137(b) in that petitioner has supplied (1) the reply in the form of a Request for Continued Examination (RCE) and fee of $405.00 and the submission required by 37 CFR 1.114; (2) the petition fee of $810.00; and (3) a proper statement of unintentional delay.

The address given on the petition differs from the new address of record. A courtesy copy of this decision is being mailed to the address given on the petition; however, the Office will mail all future correspondence solely to the address of record.

Telephone inquiries concerning this decision should be directed to the undersigned at (571) 272-7751.

This matter is being referred to Technology Center 3766 for processing of the Request for Continued Examination under 37 CFR 1.114 and the Amendment filed with the instant petition.

Joan Olszewski

Joan Olszewski
Petitions Examiner
Office of Petitions

cc: Patrick D. Archibald
17 Tersolo Rd
Haverhill, MA 01832

UNITED STATES PATENT AND TRADEMARK OFFICE

Commissioner for Patents
United States Patent and Trademark Office
P.O. Box 1450
Alexandria, VA 22313-1450
www.uspto.gov

KRIEG DEVAULT LLP
ONE INDIANA SQUARE
SUITE 2800
INDIANAPOLIS IN 46204-2079

COPY MAILED
NOV 09 2007
OFFICE OF PETITIONS

In re Application of :
Marvin F. Miller et al :
Application No. 10/899,261 : DECISION ON PETITION
Filed: July 26, 2004 :
Attorney Docket No. KIMA-3 :

This is a decision on the petition under 37 CFR 1.137(b), filed August 9, 2007, to revive the above-identified application.

The petition is **GRANTED**.

This application was held abandoned for failure to timely pay the issue fee on or before July 27, 2007. A Notice of Abandonment was mailed on August 14, 2007.

The petition satisfies the requirements of 37 CFR 1.137(b) in that petitioner has supplied (1) the reply in the form of payment of the issue fee of $700, (2) the petition fee of $750, and (3) a proper statement of unintentional delay. Accordingly, the issue fee is accepted as having been unintentionally delayed.

There is no indication that petitioner has submitted Part B - Fee(s) Transmittal form PTOL-85. Accordingly, if petitioner desires to have the information normally found thereon printed on the patent, the attached form should be completed and returned to Mail Stop Issue Fee, Commissioner for Patents, P O Box 1450, Alexandria, VA 22313-1450, or Fax to (571) 273-2885, within **ONE MONTH** from the mail date of this decision.

Telephone inquiries concerning this decision should be directed to the undersigned at (571) 272-3218.

This application is being referred to Publishing Division for appropriate processing in accordance with this decision on petition.

Frances Hicks
Petitions Examiner
Office of Petitions

ATTACHMENT: Part B - Fee(s) Transmittal

PART B - FEE(S) TRANSMITTAL

Complete and send this form, together with applicable fee(s), to: Mail Mail Stop ISSUE FEE
Commissioner for Patents
P.O. Box 1450
Alexandria, Virginia 22313-1450
or Fax (571)-273-2885

INSTRUCTIONS: This form should be used for transmitting the ISSUE FEE and PUBLICATION FEE (if required). Blocks 1 through 5 should be completed where appropriate. All further correspondence including the Patent, advance orders and notification of maintenance fees will be mailed to the current correspondence address as indicated unless corrected below or directed otherwise in Block 1, by (a) specifying a new correspondence address; and/or (b) indicating a separate "FEE ADDRESS" for maintenance fee notifications.

CURRENT CORRESPONDENCE ADDRESS (Note: Use Block 1 for any change of address)

7590 04/27/2007

David A. Lundy
KRIEG DEVAULT LUNDY LLP
825 Anthony Wayne Bldg.
203 E. Berry St.
Fort Wayne, IN 46802

Note: A certificate of mailing can only be used for domestic mailings of the Fee(s) Transmittal. This certificate cannot be used for any other accompanying papers. Each additional paper, such as an assignment or formal drawing, must have its own certificate of mailing or transmission.

Certificate of Mailing or Transmission
I hereby certify that this Fee(s) Transmittal is being deposited with the United States Postal Service with sufficient postage for first class mail in an envelope addressed to the Mail Stop ISSUE FEE address above, or being facsimile transmitted to the USPTO (571) 273-2885, on the date indicated below.

(Depositor's name)
(Signature)
(Date)

APPLICATION NO.	FILING DATE	FIRST NAMED INVENTOR	ATTORNEY DOCKET NO.	CONFIRMATION NO.
10/899,261	07/26/2004	Marvin F. Miller	KIMA-3	4404

TITLE OF INVENTION: RETRACTABLE SCREEN FOR STRUCTURAL OPENINGS

APPLN. TYPE	SMALL ENTITY	ISSUE FEE DUE	PUBLICATION FEE DUE	PREV. PAID ISSUE FEE	TOTAL FEE(S) DUE	DATE DUE
nonprovisional	YES	$700	$0	$0	$700	07/27/2007

EXAMINER	ART UNIT	CLASS-SUBCLASS
JOHNSON, BLAIR M	3634	160-180000

1. Change of correspondence address or indication of "Fee Address" (37 CFR 1.363).
- ☐ Change of correspondence address (or Change of Correspondence Address form PTO/SB/122) attached.
- ☐ "Fee Address" indication (or "Fee Address" Indication form PTO/SB/47; Rev 03-02 or more recent) attached. Use of a Customer Number is required.

2. For printing on the patent front page, list
(1) the names of up to 3 registered patent attorneys or agents OR, alternatively,
(2) the name of a single firm (having as a member a registered attorney or agent) and the names of up to 2 registered patent attorneys or agents. If no name is listed, no name will be printed.
1 _____
2 _____
3 _____

3. ASSIGNEE NAME AND RESIDENCE DATA TO BE PRINTED ON THE PATENT (print or type)

PLEASE NOTE: Unless an assignee is identified below, no assignee data will appear on the patent. If an assignee is identified below, the document has been filed for recordation as set forth in 37 CFR 3.11. Completion of this form is NOT a substitute for filing an assignment.

(A) NAME OF ASSIGNEE (B) RESIDENCE: (CITY and STATE OR COUNTRY)

Please check the appropriate assignee category or categories (will not be printed on the patent): ☐ Individual ☐ Corporation or other private group entity ☐ Government

4a. The following fee(s) are submitted:
- ☐ Issue Fee
- ☐ Publication Fee (No small entity discount permitted)
- ☐ Advance Order - # of Copies _____

4b. Payment of Fee(s): (Please first reapply any previously paid issue fee shown above)
- ☐ A check is enclosed.
- ☐ Payment by credit card. Form PTO-2038 is attached.
- ☐ The Director is hereby authorized to charge the required fee(s), any deficiency, or credit any overpayment, to Deposit Account Number _____ (enclose an extra copy of this form).

5. Change in Entity Status (from status indicated above)
- ☐ a. Applicant claims SMALL ENTITY status. See 37 CFR 1.27.
- ☐ b. Applicant is no longer claiming SMALL ENTITY status. See 37 CFR 1.27(g)(2).

NOTE: The Issue Fee and Publication Fee (if required) will not be accepted from anyone other than the applicant; a registered attorney or agent; or the assignee or other party in interest as shown by the records of the United States Patent and Trademark Office.

Authorized Signature _____ Date _____

Typed or printed name _____ Registration No. _____

This collection of information is required by 37 CFR 1.311. The information is required to obtain or retain a benefit by the public which is to file (and by the USPTO to process) an application. Confidentiality is governed by 35 U.S.C. 122 and 37 CFR 1.14. This collection is estimated to take 12 minutes to complete, including gathering, preparing, and submitting the completed application form to the USPTO. Time will vary depending upon the individual case. Any comments on the amount of time you require to complete this form and/or suggestions for reducing this burden, should be sent to the Chief Information Officer, U.S. Patent and Trademark Office, U.S. Department of Commerce, P.O. Box 1450, Alexandria, Virginia 22313-1450. DO NOT SEND FEES OR COMPLETED FORMS TO THIS ADDRESS. SEND TO: Commissioner for Patents, P.O. Box 1450, Alexandria, Virginia 22313-1450.

Under the Paperwork Reduction Act of 1995, no persons are required to respond to a collection of information unless it displays a valid OMB control number.

UNITED STATES PATENT AND TRADEMARK OFFICE

Commissioner for Patents
United States Patent and Trademark Office
P.O. Box 1450
Alexandria, VA 22313-1450
www.uspto.gov

Calfee Halter & Griswold, LLP
800 Superior Avenue
Suite 1400
Cleveland, OH 44114

MAILED

MAY 14 2009

OFFICE OF PETITIONS

In re Application of	:	
Harold Harrison	:	
Application No. 10/899,265	:	DECISION ON PETITION
Filed: July 26, 2004	:	TO WITHDRAW
Attorney Docket No.	:	FROM RECORD
	:	

This is a decision on the Request to Withdraw as attorney or agent of record under 37 C.F.R. § 1.36(b), filed February 10, 2006.

The request is **moot because a revocation of power of attorney has been previously filed**.

A review of the file record indicates that the power of attorney to Joan N. Drew and all attorneys/agents of record has been revoked by the assignee of the patent application on February 21, 2006. Accordingly, the request to withdraw under 37 C.F.R. § 1.36(b) is moot.

All future communications from the Office will continue to be directed to the below-listed address until otherwise notified by applicant.

Telephone inquires concerning this decision should be directed to Kimberly Inabinet at 571-272-4618.

Kimberly Inabinet
Petitions Examiner
Office of Petitions

cc: McNess, Wallace & Nurick, LLC
100 Pine Street
P.O. Box 1166
Harrisburg, PA 17108-1166

UNITED STATES PATENT AND TRADEMARK OFFICE

UNITED STATES DEPARTMENT OF COMMERCE
United States Patent and Trademark Office
Address: COMMISSIONER FOR PATENTS
P.O. Box 1450
Alexandria, Virginia 22313-1450
www.uspto.gov

SAP / FINNEGAN, HENDERSON LLP
901 NEW YORK AVENUE, NW
WASHINGTON, DC 20001-4413

Mail Date: 04/28/2010

Applicant	: Roman Bukary	: DECISION ON REQUEST FOR
Patent Number	: 7617177	: RECALCULATION of PATENT
Issue Date	: 11/10/2009	: TERM ADJUSTMENT IN VIEW
Application No	: 10/899,272	: OF WYETH AND NOTICE OF INTENT TO
Filed	: 07/27/2004	: ISSUE CERTIFICATE OF CORRECTION
		:

The Request for Recalculation is **GRANTED** to the extent indicated.

The patent term adjustment has been determined to be **0** days. The USPTO will *sua sponte* issue a certificate of correction reflecting the amount of PTA days determined by the recalculation.

Prior to the issuance of the certificate of correction, the USPTO will afford patentee an opportunity to be heard and request reconsideration. Accordingly, patentee has **one month or thirty (30) days**, whichever is longer, to file a request for reconsideration of this patent term adjustment calculation. See 35 U.S.C. 154(b)(3)(B)(ii) and 37 CFR 1.322(a)(4). No extensions of time will be granted under 37 CFR 1.136.

Patentee should use document code PET.OP if electronically filing a request for reconsideration of this patent term adjustment calculation. The patentee must also include the information required by 37 CFR 1.705(b)(2) and the fee required by 37 CFR 1.18(e). If patentee does not file a timely request for reconsideration of this patent term adjustment calculation including the information required by 37 CFR 1.705(b)(2) and the fee required by 37 CFR 1.18(e), the USPTO will issue a certificate of correction reflecting the PTA determination noted above.

Patentee should be aware that in order to preserve the right to review in the United States District Court for the District of Columbia of the USPTO patent term adjustment determination, patentee must ensure that he or she also take the steps required under 35 U.S.C. 154(b)(4)(A) in a timely manner. Nothing in the request for recalculation should be construed as providing an alternative time frame for commencing a civil action under 35 U.S.C. 154(b)(4)(A).

Any questions concerning this decision should be directed to the Office of Patent Legal Administration at 571-272-7702.

UNITED STATES PATENT AND TRADEMARK OFFICE

Commissioner for Patents
United States Patent and Trademark Office
P.O. Box 1450
Alexandria, VA 22313-1450
www.uspto.gov

Motorola, Inc.
1303 East Algonquin Road
IL01/3rd
Schaumburg, IL 60196

COPY MAILED
JAN 09 2009

In re Application of	:	
Gino Scribano et al.	:	
Application No. 10/899,292	:	DECISION ON PETITION
Filed: July 26, 2004	:	
Attorney Docket No. CE12193R	:	

This is a decision on the petition under the unintentional provisions of 37 CFR 1.137(b), filed August 12, 2008, to revive the above-identified application.

The petition is **GRANTED**.

The application became abandoned for failure to reply in a timely manner to the non-final Office action mailed, September 13, 2007, which set a shortened statutory period for reply of three (3) months. No extensions of time under the provisions of 37 CFR 1.136(a) were obtained. Accordingly, the application became abandoned on December 14, 2007.

The petition satisfies the requirements of 37 CFR 1.137(b) in that petitioner has supplied (1) the reply in the form of an amendment, (2) the petition fee of $1540, and (3) a proper statement of unintentional delay.

Telephone inquiries concerning this decision should be directed to Shelley Clement at (571)272-6052 or in her absence to the undersigned at (571)272-7099.

This application is being referred to Technology Center AU2617 for appropriate action by the Examiner in the normal course of business on the reply received

for David Bucci
Petitions Examiner
Office of Petitions

UNITED STATES PATENT AND TRADEMARK OFFICE

UNITED STATES DEPARTMENT OF COMMERCE
United States Patent and Trademark Office
Address: COMMISSIONER FOR PATENTS
P.O. Box 1450
Alexandria, Virginia 22313-1450
www.uspto.gov

FISH & RICHARDSON P.C.
P.O. BOX 1022
MINNEAPOLIS, MN 55440-1022

Mail Date: 04/20/2010

Applicant	: Takako Takasu	: DECISION ON REQUEST FOR
Patent Number	: 7579419	: RECALCULATION of PATENT
Issue Date	: 08/25/2009	: TERM ADJUSTMENT IN VIEW
Appliction No	: 10/899,296	: OF WYETH AND NOTICE OF INTENT TO
Filed	: 07/27/2004	: ISSUE CERTIFICATE OF CORRECTION
		:

The Request for Recalculation is **GRANTED** to the extent indicated.

The patent term adjustment has been determined to be **941** days. The USPTO will *sua sponte* issue a certificate of correction reflecting the amount of PTA days determined by the recalculation.

Prior to the issuance of the certificate of correction, the USPTO will afford patentee an opportunity to be heard and request reconsideration. Accordingly, patentee has **one month or thirty (30) days**, whichever is longer, to file a request for reconsideration of this patent term adjustment calculation. See 35 U.S.C. 154(b)(3)(B)(ii) and 37 CFR 1.322(a)(4). No extensions of time will be granted under 37 CFR 1.136.

Patentee should use document code PET.OP if electronically filing a request for reconsideration of this patent term adjustment calculation. The patentee must also include the information required by 37 CFR 1.705(b)(2) and the fee required by 37 CFR 1.18(e). If patentee does not file a timely request for reconsideration of this patent term adjustment calculation including the information required by 37 CFR 1.705(b)(2) and the fee required by 37 CFR 1.18(e), the USPTO will issue a certificate of correction reflecting the PTA determination noted above.

Patentee should be aware that in order to preserve the right to review in the United States District Court for the District of Columbia of the USPTO patent term adjustment determination, patentee must ensure that he or she also take the steps required under 35 U.S.C. 154(b)(4)(A) in a timely manner. Nothing in the request for recalculation should be construed as providing an alternative time frame for commencing a civil action under 35 U.S.C. 154(b)(4)(A).

Any questions concerning this decision should be directed to the Office of Patent Legal Administration at 571-272-7702.

UNITED STATES PATENT AND TRADEMARK OFFICE

Commissioner for Patents
United States Patent and Trademark Office
P.O. Box 1450
Alexandria, VA 22313-1450
www.uspto.gov

STERNE, KESSLER, GOLDSTEIN & FOX PLLC
1100 NEW YORK AVENUE, N.W.
WASHINGTON DC 20005

COPY MAILED

MAR 0 8 2005

OFFICE OF PETITIONS

In re Application of Chalfin et al. Application No. 10/899,316 Filed: July 27, 2004 Attorney Docket No. 1312.00 Title: SYSTEM AND METHOD FOR NETWORKED COMPUTER GRAPHICS	DECISION REFUSING STATUS UNDER 37 CFR 1.47(a)

This is in response to the petition filed January 21, 2005, under 37 CFR. §1.47(a).

The petition under 37 CFR. §1.47(a) is **DISMISSED**.

Rule 47 applicant is given TWO MONTHS from the mailing date of this decision to reply, correcting the below-noted deficiencies. Any reply should be entitled "Request for Reconsideration of Petition Under 37 CFR. §1.47(a)," and should only address the deficiencies noted below, except that the reply may include an oath or declaration executed by the non-signing inventor. **Failure to respond will result in abandonment of the application**. Any extensions of time will be governed by 37 CFR. §1.136(a).

The above-identified application was filed on July 27, 2004, without an executed oath or declaration. Accordingly, on September 20, 2004, applicant was mailed a "Notice to File Missing Parts of Nonprovisional Application - Filing Date Granted," requiring for the purposes of this decision an executed oath or declaration in compliance with §1.63, and a surcharge for its late filing. This Notice set an extendable two-month period for reply of November 20, 2004.

In reply, applicant filed a petition, the surcharge for late filing of the declaration, a statement of facts by Michael Bay and a partially executed declaration. To make the reply timely, a two (2) month extension of time was also submitted. However a review of the record shows that petitioner requires a three month extension of time. A timely response should have been filed on January 20, 2005. A certificate of mailing was not provided with the documents. Accordingly deposit account 19-0036 will be charged $1020.00 towards the three month extension of time fee.

A grantable petition under 37 CFR. §1.47(a) requires: (1) proof that the non-signing inventor cannot be reached or refuses to sign the oath or declaration after having been

presented with the application papers (specification, claims and drawings); (2) an acceptable oath or declaration in compliance with 35 U.S.C. §§115 and 116; (3) the petition fee; and (4) a statement of the last known address of the non-signing inventor. The instant petition does not satisfy requirements (1).

As to item (1), where an inventor cannot be located/reached as in the case of inventor Ungar , rule 47 applicant must demonstrate diligent effort was made to find or reach the non-signing inventors. See MPEP 409.03(d). The statements made in the petition and statement of facts do not illustrate "diligent effort" was made to locate the non-signing inventors. Copies of documentary evidence such as internet searches, certified mail return receipts, cover letters of instructions, telegrams, that support a finding that the nonsigning inventor could not be found or reached should be made part of the statement. The steps taken to locate the whereabouts of the nonsigning inventor should be included. It is important that the statement contain facts as opposed to conclusions. Petitioner should present a signed statement of facts from a person that has first hand knowledge of the diligent efforts made to locate the non-signing inventors. If inventor Ungar is located a copy of the application papers (specification, including claims, drawings, and oath or declaration) should be mailed to the inventor's mailing address.

Further, if the inventor Ungar is located and he refuses to execute the application papers, rule 47 applicant will need to provide the mailing address in a newly executed declaration or in an application data sheet pursuant to 37 CFR 1.76.

As to inventor Dunwoody, rule 47 applicant has established he refuses to execute the application papers.

Further correspondence with respect to this matter should be addressed as follows:

By mail:	Mail Stop Petition Commissioner for Patents P.O. Box 1450 Alexandria, VA 22313-1450
By facsimile:	(703) 872-9306
By delivery service: (FedEx, UPS, DHL, etc.)	U.S. Patent and Trademark Office Customer Service Window, Randolph Building 401 Dulany Street Alexandria, VA 22314

Telephone inquiries related to this decision may be directed to the undersigned at (571) 272-3215.

Charlema R. Grant

Charlema R. Grant
Petitions Attorney
Office of Petitions

UNITED STATES PATENT AND TRADEMARK OFFICE

Commissioner for Patents
United States Patent and Trademark Office
P.O. Box 1450
Alexandria, VA 22313-1450
www.uspto.gov

STERNE, KESSLER, GOLDSTEIN & FOX PLLC
1100 NEW YORK AVENUE, N.W.
WASHINGTON DC 20005

COPY MAILED

AUG 2 5 2005

OFFICE OF PETITIONS

In re Application of	:	
Alexander Chalfin, John Craig Dunwoody,	:	DECISION GRANTING STATUS
Alpana Kaulgud and Paul Jeffrey Ungar	:	UNDER 37 CFR 1.47(a)
Application No.10/899,316	:	
Filed: July 27, 2004	:	
Attorney Docket Number: 1312.00	:	
Title of Invention: System and Method for	:	
Networked Computer Graphics	:	

This is in response to the petition under 37 CFR 1.47(a), filed July 7, 2005.

The petition is GRANTED.

Petitioner has shown that non-signing inventor Dunwoody has refused to join in the filing of the above-identified application after having been presented with the application papers. The petition attest a copy of the application was sent to non-signing inventor's last known address. The non-signing inventor's failure to respond to the application mailing sufficiently establishes that they refuse to execute the application papers.

The above-identified application and papers have been reviewed and found in compliance with 37 CFR 1.47(a). This application is hereby accorded Rule 1.47(a) status.

As provided in Rule 1.47(c), this Office will forward notice of this application's filing to the non-signing inventor at the address given in the petition. Notice of the filing of this application will also be published in the Official Gazette.

As to petitioner's request for refund, Petitioner submitted the $450.00 for an extension of time fee within the second month and $200.00 petition fee. The 2nd month extension of time fee was refunded in the amount $450.00 on March 8, 2005 and petitioner was erroneously charged the 3rd month extension of time fee in the amount of $1,020.00. For reasons unknown petitioner was charged an additional $130 petition fee which was also refunded on March 8, 2005. Thus petitioner was refunded a total of $580.00 on March 8, 2005. Petitioner is now entitled to a refund of $570.00.

This application is being forwarded to the Office of Initial Patent Examination for further

processing.

Telephone inquiries related to this decision may be directed to the undersigned at (571) 272-3215.

Charlema R. Grant
Petitions Attorney
Office of Petitions

UNITED STATES PATENT AND TRADEMARK OFFICE

Commissioner for Patents
United States Patent and Trademark Office
P.O. Box 1450
Alexandria, VA 22313-1450
www.uspto.gov

John Craig Dunwoody
16 Ralston Ranch Road
Belmont, California 94002

COPY MAILED

AUG 2 5 2005

OFFICE OF PETITIONS

In re Application of
Alexander Chalfin, John Craig Dunwoody,
Alpana Kaulgud and Paul Jeffrey Ungar
Application No.10/899,316
Filed: July 27, 2004
Attorney Docket Number: 1312.00
Title of Invention: System and Method for
Networked Computer Graphics

: LETTER

Dear Mr. Dunwoody:

You are named as a joint inventor in the above-identified United States patent application filed under the provisions of 35 U.S.C. 116 (United States Code) and 37 C.F.R. § 1.47(a), Rules of Practice in Patent Cases. Should a patent be granted on the application you will be designated therein as a joint inventor.

As a named inventor you are entitled to inspect any paper in the file wrapper of the application, order copies of all or any part thereof (at a prepaid cost as per 37 C.F.R. § 1.19) or make your position of record in the application. Alternatively, you may arrange to do any of the preceding through a registered patent attorney or agent presenting written authorization from you. If you care to join the application, applicant (see below) would presumably assist you. Joining in the application would entail the filing of an appropriate oath or declaration by you pursuant to 37 C.F.R. § 1.63.

Telephone inquiries regarding this communication should be directed to Petitions Attorney Charlema R. Grant at (571) 272-3215. Requests for information regarding your application should be directed to the File Information Unit at (703) 308-2733. Information regarding how to pay for and order a copy of the application, or a specific paper in the application, should be directed to Certification Division at (703) 308-9726 or 1-800-972-6382 (outside the Washington D.C. area).

Charlema R. Grant
Petitions Attorney
Office of Petitions

STERNE, KESSLER, GOLDSTEIN & FOX PLLC
1100 NEW YORK AVENUE, N.W.
WASHINGTON DC 20005
TIMOTHY A. DOYLE

UNITED STATES PATENT AND TRADEMARK OFFICE

Commissioner for Patents
United States Patent and Trademark Office
P.O. Box 1450
Alexandria, VA 22313-1450
www.uspto.gov

MAILED
FROM DIRECTORS OFFICE

OCT 05 2004

TECHNOLOGY CENTER 3600

CRAIG W. RODDY
HALLIBURTON ENERGY SERVICES
P.O. BOX 1431
DUNCAN, OK 73536-0440

In re application of	:	**DECISION ON PETITION**
Jiten Chatterji et al.	:	**TO MAKE SPECIAL**
Application No. 10/899,325	:	**(APPLICANT'S AGE)**
Filed: July 26, 2004	:	
For: FOAMED CEMENT SLURRIES, ADDITIVES, AND METHODS		

This is a decision on the petition submitted on July 26, 2004 under 37 CFR 1.102 (c) to make the above-identified application special under the accelerated examination procedure set forth in MPEP 708.02, Section IV: Applicant's Age.

The petition is **GRANTED**.

An application may be accorded special status upon the filing of a petition providing evidence showing that the applicant is at least 65 years old. Such a showing may be provided by evidence such as a birth certificate or a statement from the applicant.

The evidence submitted with the petition is a signed declaration indicating Mr. Chatterji is at least 65 years of age.

The examiner is directed (1) to make an interference search for possible interfering applications, (2) to promptly examine this application out of turn, and (3) if any interfering application is discovered, to examine such application simultaneously and state in the first official letter of such application that it is being taken out of turn because of a possible interference.

Petitioner is advised that this application will continue to be special, throughout its entire prosecution and pendency, including interference or appeal, if any, only if petitioner makes a prompt ***bona fide*** effort, in response to each Office action, to place the application in condition for allowance, even if it is necessary to conduct an interview with the examiner to accomplish this purpose.

SUMMARY: Petition to Make Special **GRANTED**.

Kenneth J. Dorner
Special Programs Examiner
Technology Center 3600
(703) 308-0866

KJD/slb: 9/28/04

UNITED STATES PATENT AND TRADEMARK OFFICE

Commissioner for Patents
United States Patent and Trademark Office
P.O. Box 1450
Alexandria, VA 22313-1450
www.uspto.gov

COPY MAILED

JUN 18 2008

OFFICE OF PETITIONS

JAMES H. PHILLIPS - MS B-55
BULL INFORMATION SYSTEMS INC.
13430 NORTH BLACK CANYON HIGHWAY
PHOENIX, AZ 85029-1310

In re Application of :
Stefan R. Bohult, et al. :
Application No. 10/899,327 : ON PETITION
Filed: July 26, 2004 :
Attorney Docket No. 52003227 :

This is a decision in response to the petition, filed February 5, 2008, to revive the above-identified application under the provisions of 37 CFR 1.137(b).

The petition is **GRANTED**.

The application became abandoned for a failure to reply in a timely manner to a non-final Office action mailed June 20, 2007. A Notice of Abandonment was mailed on January 18, 2008. In response, on February 5, 2008, the present petition was filed.

The petition satisfies the requirements of 37 CFR 1.137(b) in that petitioner has supplied (1) a proposed reply; (2) the petition fee of $1,540; and (3) an adequate statement of unintentional delay.

This application is being referred to Technology Center AU 2192 for appropriate action by the Examiner in the normal course of business on the reply received February 5, 2008.

Telephone inquiries concerning this decision should be directed to the undersigned at (571) 272-3204. Inquiries relating to further prosecution should be directed to the Technology Center.

Sherry D. Brinkley
Petitions Examiner
Office of Petitions

UNITED STATES PATENT AND TRADEMARK OFFICE

Commissioner for Patents
United States Patent and Trademark Office
P.O. Box 1450
Alexandria, VA 22313-1450
www.uspto.gov

FROST BROWN TODD, LLC
2200 PNC CENTER
201 E. FIFTH STREET
CINCINNATI OH 45202

COPY MAILED

JUL 13 2007

OFFICE OF PETITIONS

In re Application of
ZIMMERMANN, et al.
Application No. 10/899,335
Filed: July 26, 2004
Attorney Docket No. **0103079-0519525**

DECISION ON PETITION
TO WITHDRAW
FROM RECORD

This is a decision on the Request to Withdraw as attorney or agent of record under 37 C.F.R. § 1.36(b), filed January 3, 2007.

The request is **NOT APPROVED** as moot.

A review of the file record indicates that the power of attorney to FROST BROWN TODD LLC has been revoked by the assignee of the patent application on April 11, 2007. Accordingly, the request to withdraw under 37 C.F.R. § 1.36(b) is moot.

All future communications from the Office will continue to be directed to the below-listed address until otherwise notified by applicant.

Telephone inquires concerning this decision should be directed to the undersigned at 571-272-7253.

Monica A. Graves
Petitions Examiner
Office of Petitions

cc: **KENYON & KENYON LLP**
1500 K STREET NW, SUITE 700
WASHINGTON, DC 20005

UNITED STATES PATENT AND TRADEMARK OFFICE

Commissioner for Patents
United States Patent and Trademark Office
P.O. Box 1450
Alexandria, VA 22313-1450
www.uspto.gov

BENTON F. BAUGH
14626 OAK BEND
HOUSTON TX 77079

COPY MAILED

MAY 29 2008

OFFICE OF PETITIONS

In re Application of
Benton F. BAUGH
Application No. 10/899,361
Filed: 7/26/2004
Attorney Docket No. none

DECISION ON PETITION

This is a decision on the petition under the unintentional provisions of 37 CFR 1.137(b), filed 3/31/2008, to revive the above-identified application.

The petition is **GRANTED**.

The two-month period for filing an appeal brief under 37 CFR 41.37 (accompanied by the fee required by 37 CFR 41.20(b)(2)), runs from the date of this decision.

This application became abandoned for failure to timely file a reply within the meaning of 37 CFR 1.113 to the final Office action of 6/20/2007. The proposed reply required for consideration of a petition to revive must be a Notice of Appeal (and appeal fee required by 37 CFR 41.20(b)(2)), an amendment that *prima facie* places the application in condition for allowance, a Request for Continued Examination (RCE) and submission (37 CFR 1.114), or the filing of a continuing application under 37 CFR 1.53(b). See MPEP 711.03(c)(III)(A)(2). A three-month extension of time pursuant to the provisions of 37 CFR 1.136(a) was obtained. Accordingly, the date of abandonment of this application is 12/21/2007.

The petition satisfies the requirements of 37 CFR 1.137(b) in that petitioner has supplied (1) the reply in the form of a Notice of Appeal; (2) the petition fee of $770; and (3) a proper statement of unintentional delay.

Telephone inquiries concerning this decision should be directed to Quyen Leung at (571) 272-6051 or in her absence, the undersigned at (571) 272-7099.

This application is being referred to Technology Center AU 3671 for appropriate action of applicant's pre-appeal brief request for review, filed 12/11/2007 and 3/31/2008, and to await the filing of an appeal brief or for such other appropriate reply as may be submitted to continue prosecution of the application.

David A. Bucci
Petitions Examiner
Office of Petitions

UNITED STATES PATENT AND TRADEMARK OFFICE

Commissioner for Patents
United States Patent and Trademark Office
P.O. Box 1450
Alexandria, VA 22313-1450
www.uspto.gov

TAYLOR & AUST, P.C.
P.O. Box 560
142. S Main Street
Avilla, IN 46710

COPY MAILED

MAR 25 2009

OFFICE OF PETITIONS

In re Application of	:	
Daniel A. Schoch	:	
Application No. 10/899,374	:	DECISION ON PETITION
Filed: July 23, 2004	:	
Attorney Docket No. MMC0003.US	:	

This is a decision on the petition under the unintentional provisions of 37 CFR 1.137(b), filed March 9, 2009, to revive the above-identified application.

The petition is **DISMISSED**.

Any request for reconsideration of this decision must be submitted within **TWO (2) MONTHS** from the mail date of this decision. Extensions of time under 37 CFR 1.136(a) are permitted. The reconsideration request should include a cover letter entitled "Renewed Petition under 37 CFR 1.137(b)." This is **not** a final agency action within the meaning of 5 U.S.C. § 704.

The application became abandoned for failure to file a reply to the final Office action mailed August 1, 2006, which set a statutory period for reply of three months. No extension of time under 37 CFR 1.136 was obtained. Accordingly, the application became abandoned on November 2, 2006.

A grantable petition under 37 CFR 1.137(b) must be accompanied by: (1) the required reply, unless previously filed; (2) the petition fee as set forth in 37 CFR 1.17(m); (3) a statement that the entire delay in filing the required reply from the due date for the reply until the filing of a grantable petition pursuant to 37 CFR 1.137(b) was unintentional; and (4) any terminal disclaimer (and fee as set forth in 37 CFR 1.20(d)) required by 37 CFR 1.137(d). Where there is a question as to whether either the abandonment or the delay in filing a petition under 37 CFR 1.137 was unintentional, the Director may require additional

information. *See* MPEP 711.03(c)(II)(C) and (D). The instant petition lacks item (3).

There are three periods to be considered during the evaluation of a petition under 37 CFR 1.137(b):

(1) the delay in reply that originally resulted in the abandonment;

(2) the delay in filing an initial petition pursuant to 37 CFR 1.137(b) to revive the application; and

(3) the delay in filing a grantable petition pursuant to 37 CFR 1.137(b) to revive the application.

Currently, the delay has not been shown to the satisfaction of the Director to be unintentional for periods (1) and (2).

As to Period (1):

The patent statute at 35 U.S.C. § 41(a)(7) authorizes the Director to revive an "unintentionally abandoned application." The legislative history of Public Law 97-247 reveals that the purpose of 35 U.S.C. § 41(a)(7) is to permit the Office to have more discretion than in 35 U.S.C. §§ 133 or 151 to revive abandoned applications in appropriate circumstances, but places a limit on this discretion, stating that "[u]nder this section a petition accompanied by either a fee of $500 or a fee of $50 **would not be granted where the abandonment** or the failure to pay the fee for issuing the patent **was intentional** as opposed to being unintentional or unavoidable." [emphasis added]. See H.R. Rep. No. 542, 97th Cong., 2d Sess. 6-7 (1982), *reprinted in* 1982 U.S.C.C.A.N. 770-71. The revival of an intentionally abandoned application is antithetical to the meaning and intent of the statute and regulation.

35 U.S.C. § 41(a)(7) authorizes the Director to accept a petition "for the revival of an unintentionally abandoned application for a patent." As amended December 1, 1997, 37 CFR 1.137(b)(3) provides that a petition under 37 CFR 1.137(b) must be accompanied by a statement that the delay was unintentional, but provides that "[t]he Commissioner may require additional information where there is a question whether the delay was unintentional." Where, as here, there is a question whether the initial delay was unintentional, the petitioner must meet the

burden of establishing that the delay was unintentional within the meaning of 35 U.S.C. § 41(a)(7) and 37 CFR 1.137(b). *See* In re Application of G, 11 USPQ2d 1378, 1380 (Comm'r Pats. 1989); 37 CFR 1.137(b). Here, in view of the inordinate delay (over 2 years) in resuming prosecution, there is a question whether the entire delay was unintentional. Petitioner should note that the issue is not whether some of the delay was unintentional by any party; rather, the issue is whether the entire delay has been shown to the satisfaction of the Director to be unintentional.

The question under 37 CFR 1.137(b) for period (1) is whether the delay on the part of the party having the right or authority to reply to avoid abandonment (or not reply) was unintentional. Accordingly, any renewed petition must clearly identify the party having the right to reply to avoid abandonment on November 2, 2006. That party, in turn must explain what effort(s) was made to further reply to the outstanding Office action and, further, why no reply was filed. If no effort was made to further reply, then that party must explain why the delay in this application does not result from a deliberate course of action (or inaction). As Randall J. Knuth, P.C. was the attorney responsible for this application at the time of abandonment, he should explain why this application became abandoned while it was under his control and what efforts he made to reply and with whom this matter was discussed outside of his Office. Copies of any correspondence relating to the filing, or to not filing a further reply to the outstanding Office action are required from the responsible person and whoever else was involved with this application at the time of abandonment. Statements are required from any and all persons and any responsible person(s) having firsthand knowledge of the circumstances surrounding the lack of a reply to the outstanding Office action. As the courts have made clear, it is pointless for the USPTO to revive a long abandoned application without an adequate showing that the delay did not result from a deliberate course of action. *See* Lawman Armor v. Simon, 2005 U.S. Dist. LEXIS 10843, 74 USPQ2d 1633 (DC EMich 2005); Field Hybrids, LLC v. Toyota Motor Corp., 2005 U.S. Dist. LEXIS 1159 (D. Minn Jan. 27, 2005); Lumenyte Int'l Corp. v. Cable Lite Corp., Nos. 96-1011, 96-1077, 1996 U.S. App. LEXIS 16400, 1996 WL 383927 (Fed. Cir. July 9, 1996) (unpublished) (patents held unenforceable due to a finding of inequitable conduct in submitting an inappropriate statement that the abandonment was unintentional).

As to Period (2):

Likewise, where the applicant deliberately chooses not to seek or persist in seeking the revival of an abandoned application, or where the applicant deliberately chooses to delay seeking the revival of an abandoned application, the resulting delay in seeking revival of the abandoned application cannot be considered as "unintentional" within the meaning of 37 CFR 1.137(b). *See* MPEP 711.03(c).

The language of both 35 U.S.C. § 41(a)(7) and 37 CFR 1.137(b) are clear and unambiguous, and, furthermore, without qualification. That is, the delay in filing the reply during prosecution, as well as in filing the petition seeking revival, must have been, without qualification, "unintentional" for the reply to now be accepted on petition. The Office requires that the entire delay be at least unintentional as a prerequisite to revival of an abandoned application to prevent abuse and injury to the public. *See* H.R. Rep. No. 542, 97th Cong., 2d Sess. 7 (1982), reprinted in 1982 U.S.C.C.A.N. 771 ("[i]n order to prevent abuse and injury to the public the Commissioner . . . could require applicants to act promptly after becoming aware of the abandonment"). The December 1997 change to 37 CFR 1.137 did not create any new right to overcome an intentional delay in seeking revival, or in renewing an attempt at seeking revival, of an abandoned application. *See* Changes to Patent Practice and Procedure; Final Rule Notice, 62 Fed. Reg. 53131, 53160 (October 10, 1997), 1203 Off. Gaz. Pat. Office 63, 87 (October 21, 1997), which clearly stated that any protracted delay (here, over 2 years) could trigger, as here, a request for additional information. As the courts have since made clear, a protracted delay in seeking revival, as here, requires a petitioner's detailed explanation seeking to excuse the delay as opposed to USPTO acceptance of a general allegation of unintentional delay. *See* Lawman Armor v. Simon, 2005 U.S. Dist. LEXIS 10843, 74 USPQ2d 1633, at 1637-8 (DC EMich 2005); Field Hybrids, LLC v. Toyota Motor Corp., 2005 U.S. Dist. LEXIS 1159 (D. Minn Jan. 27, 2005) at *21-*23. Statements are required from any and all persons and the responsible person(s) having firsthand knowledge of the circumstances surrounding the protracted delay, after the abandonment date, in seeking revival.

As noted in MPEP 711.03(c)(II), subsection D, in instances in which such petition was not filed within 1 year of the date of abandonment of the application, applicants should include:

(A) the date that the applicant first became aware of the abandonment of the application; and

(B) a showing as to how the delay in discovering the abandoned status of the application occurred despite the exercise of due care or diligence on the part of the applicant.

In either instance, applicant's failure to carry the burden of proof to establish that the "entire" delay was "unavoidable" or "unintentional" may lead to the denial of a petition under 37 CFR 1.137(b), regardless of the circumstances that originally resulted in the abandonment of the application. *See also* New York University v. Autodesk, 2007 U.S. DIST LEXIS, U.S.District LEXIS 50832, *10 -*12 (S.D.N.Y. 2007)(protracted delay in seeking revival undercuts assertion of unintentional delay).

Any renewed petition may be addressed as follows:

By mail: Mail Stop PETITION
Commissioner for Patents
P.O. Box 1450
Alexandria, VA 22313-1450

By hand: U.S. Patent and Trademark Office
Customer Service Window, Mail Stop Petitions
Randolph Building
401 Dulany Street
Alexandria, VA 22314

The centralized facsimile number is (571) 273-8300.

Telephone inquiries concerning this decision should be directed to the undersigned at (571) 272-3226.

Andrea Smith
Petitions Examiner
Office of Petitions

SPE RESPONSE FOR CERTIFICATE OF CORRECTION

Paper No.: _____

DATE : June 9, 2006

TO SPE OF : ART UNIT 1621

SUBJECT : Request for Certificate of Correction for Appl. No.: 10/899419 Patent No.: 7,049,472

Please respond to this request for a certificate of correction within 7 days.

Please review the requested changes/corrections as shown in the **COCIN** document(s) in the IFW application image. No new matter should be introduced, nor should the scope or meaning of the claims be changed.

Please complete the response (see below) and forward the completed response to scanning using document code **COCX**.

Magdalene Talley

Certificates of Correction Branch

703-308-9390 ext. 116

Thank You For Your Assistance

The request for issuing the above-identified correction(s) is hereby:

Note your decision on the appropriate box.

- ☒ **Approved** — All changes apply.
- ☐ **Approved in Part** — Specify below which changes **do not** apply.
- ☐ **Denied** — State the reasons for denial below.

Comments: Has support for the amendment in the specification in Column 2, lines 44-45.

Yvonne Eyke — SPE

1621 — Art Unit

COCX

SPE RESPONSE FOR CERTIFICATE OF CORRECTION

Paper No.: 20090622

DATE : 5-13-09

TO SPE OF : ART UNIT 2612

SUBJECT : Request for Certificate of Correction for Appl. No.: 10/899425 Patent No.: RE. 39,909

Please respond to this request for a certificate of correction within 7 days.

FOR IFW FILES:

Please review the requested changes/corrections as shown in the **COCIN** document(s) in the IFW application image. No new matter should be introduced, nor should the scope or meaning of the claims be changed.

Please complete the response (see below) and forward the completed response to scanning using document code **COCX**.

FOR PAPER FILES:

Please review the requested changes/corrections as shown in the attached certificate of correction. Please complete this form (see below) and forward it with the file to:

Certificates of Correction Branch (CofC)
South Tower - 9A22
Palm Location 7580

C-of-C

Should ~~Reissue~~ be entered?

E. Jones
Certificates of Correction Branch
703-308-9390 ext. _____

Thank You For Your Assistance

The request for issuing the above-identified correction(s) is hereby:
Note your decision on the appropriate box.

- ☒ **Approved** — All changes apply.
- ☐ **Approved in Part** — Specify below which changes **do not** apply.
- ☐ **Denied** — State the reasons for denial below.

Comments: _____

DANIEL WU
SUPERVISORY PATENT EXAMINER

SPE

2612
Art Unit

PTO/SB/44 (09-07)
Approved for use through 08/31/2010. OMB 0651-0033
U.S. Patent and Trademark Office; U.S. DEPARTMENT OF COMMERCE
Under the Paperwork Reduction Act of 1995, no persons are required to respond to a collection of information unless it displays a valid OMB control number.
(Also Form PTO-1050)

UNITED STATES PATENT AND TRADEMARK OFFICE
CERTIFICATE OF CORRECTION

PATENT NO. : RE 39,909

APPLICATION NO.: 10/899,425

ISSUE DATE : November 6, 2007

INVENTOR(S) : John E. Taylor, Jr.

It is certified that an error appears or errors appear in the above-identified patent and that said Letters Patent is hereby corrected as shown below:

Please insert the following just prior to the first line of the specification:

"Notice: More than one reissue application has been filed for the reissue of U.S. Patent No. 6,160,481. The reissue applications are application numbers 10/899,425 (the present application), 10/317,080 (of which the '425 application is a continuation reissue), and 11/806,841 (which is a continuation reissue of the '425 application)."

MAILING ADDRESS OF SENDER (Please do not use customer number below):

Steptoe & Johnson LLP
1330 Connecticut Avenue, NW, Washington, DC 20036

This collection of information is required by 37 CFR 1.322, 1.323, and 1.324. The information is required to obtain or retain a benefit by the public which is to file (and by the USPTO to process) an application. Confidentiality is governed by 35 U.S.C. 122 and 37 CFR 1.14. This collection is estimated to take 1.0 hour to complete, including gathering, preparing, and submitting the completed application form to the USPTO. Time will vary depending upon the individual case. Any comments on the amount of time you require to complete this form and/or suggestions for reducing this burden, should be sent to the Chief Information Officer, U.S. Patent and Trademark Office, U.S. Department of Commerce, P.O. Box 1450, Alexandria, VA 22313-1450. DO NOT SEND FEES OR COMPLETED FORMS TO THIS ADDRESS. **SEND TO: Attention Certificate of Corrections Branch, Commissioner for Patents, P.O. Box 1450, Alexandria, VA 22313-1450.**

If you need assistance in completing the form, call 1-800-PTO-9199 and select option 2.

OIPE
MAY 06 2009
PATENT & TRADEMARK OFFICE

cqc

PATENT

IN THE UNITED STATES PATENT AND TRADEMARK OFFICE

In re Patent of

John E. Taylor, Jr.

Patent No.: RE39,909

Issue Date: November 6, 2007

Application No.: 10/899,425

Title: MONITORING SYSTEM

Attorney Docket: 15446.0003 RC1

Certificate
MAY 08 2009
of Correction

REQUEST FOR CERTIFICATE OF CORRECTION UNDER RULE 323

Commissioner of Patents
P.O. Box 1450
Alexandria, Virginia 22313-1450

ATTN: Certificate of Correction Branch

Sir:

It is respectfully requested that a Certificate of Correction be issued in order to correct the errors specified in the attached Certificate of Correction Form (PTO-1050), which has been completed according to the Notice in 862 O.G. 2.

In accordance with the provisions of Rule 323, the Commissioner is hereby authorized to apply any charges related to this request to Deposit Account No. 19-4293.

Respectfully submitted,

STEPTOE & JOHNSON LLP

Date: May 6, 2009

Scott D. Watkins
Registration No. 36,715
William J. Barrow
Registration No. 62,813

1330 Connecticut Avenue, NW
Washington, DC 20036-1795
Telephone: (202) 429-3000
Facsimile: (202) 429-3902

UNITED STATES PATENT AND TRADEMARK OFFICE

Commissioner for Patents
United States Patent and Trademark Office
P.O. Box 1450
Alexandria, VA 22313-1450
www.uspto.gov

TSUNG-CHIEH CHANG
235 CHUNG-HO BOX 8-24
TAIPEI HSIEN 235 TW TAIWAN

COPY MAILED

JUL 18 2007

OFFICE OF PETITIONS

ON PETITION

In re Application of	:	
Chang, Tsung-Chieh	:	
Application No. 10/899,432	:	
Filed: July 26, 2004	:	
Attorney Docket No. J5P4053-GFP-922516-CIP	:	

This is a decision on the petition under 37 C.F.R. § 1.137(b), filed June 13, 2007, to revive the above-identified application.

The petition is **GRANTED.**

The petition satisfies the conditions for revival pursuant to the provisions of 37 CFR 1.137(b) in that (1) the reply in the form of an Amendment; (2) the petition fee; and (3) the required statement of unintentional delay have been received. Accordingly, the response has been accepted as having been unintentionally delayed.

This matter is being referred to Technology Center 3700 for further examination on the merits.

Telephone inquiries regarding this decision should be directed to the undersigned at (571) 272-3206.

Liana Walsh
Petitions Examiner
Office of Petitions

UNITED STATES PATENT AND TRADEMARK OFFICE

COMMISSIONER FOR PATENTS
UNITED STATES PATENT AND TRADEMARK OFFICE
P.O. BOX 1450
ALEXANDRIA, VA 22313-1450
www.uspto.gov

JJGJR.: 02-05

Paper No: __

COPY MAILED

FEB 09 2005

OFFICE OF PETITIONS

PILLSBURY WINTHROP, LLP
P.O. BOX 10500
MCLEAN VA 22102

In re Application of
Pril :
Application No. 10/899,437 : DECISION ON PETITION
Filing Date: 27 July, 2004 (Deposit)
Attorney Docket No. 081468-0310507 :

This is a decision on the papers filed on 15 December, 2004, considered as a petition to obtain a filing date of 27 July, 2004, under 37 C.F.R. §1.53 for the instant application.

The petition under 37 C.F.R. §1.53 is **DISMISSED**.

BACKGROUND

This nonprovisional application was deposited on 27 July, 2004.

On 18 October, 2004, the Office mailed a "Notice of Incomplete Nonprovisional Application," (the 8 October Notice) and indicated that a filing date had not been granted because the application had been deposited without drawings as required under 35 U.S.C. §113 (first sentence).

The 18 October Notice specified a reply period of two (2) months, and also informed Petitioner that the application would receive the filing date consistent with the submission of required drawings; or that Petitioner might provide evidence that the , or that Petitioner might evidence that either drawings were not necessary for the understanding of the invention or the application as submitted otherwise satisfied the statutory requirements for a filing date.

Petitioner does not appear to have selected any of those alternatives. Instead, Petitioner submitted on 15 December, 2004, four (4) sheets of drawings containing Figs. 1 - 4 as "Substitute drawing sheets." What makes this a curious transaction is that it appears that the application may contain

at least one method or process claim–a condition that Petitioner failed to raise in his filing of 15 December, 2004.

While it is the practice of the Office to treat an application that contains at least one process or method claim as an application for which a drawing is not necessary for the understanding of the invention under 35 U.S.C. §113 (first sentence) (see: MPEP §601.01[1]), it is not clear from the 15 December, 2004, filing by Petitioner that he wishes to obtain a filing date in the absence of the drawings.

Moreover, Petitioner has captioned his 15 December, 2004, filing to include the following: "Filed: July 27, 2004," and, thus, it is not clear that Petitioner wishes to have a filing date later than the presently stated deposit date of 27 July, 2004.

Therefore, Petitioner is given one month (and in no case less than 30 days) to specify his intentions as to the filing date with or without the drawings–and should Petitioner wish to have a 27 July, 2004, deposit date for the drawings Petitioner must evidence such a transaction with a date stamped receipt card (see: MPEP §503[2]).

---

[1] The commentary at MPEP §601.01 provides in pertinent part:

* * *

601.01(f) Applications Filed Without Drawings

35 U.S.C. 111(a)(2)(B) and 35 U.S.C. 111(b)(1)(B) each provide, in part, that an "application shall include . . . a drawing as prescribed by section 113 of this title" and 35 U.S.C. 111(a)(4) and 35 U.S.C. 111(b)(4) each provide, in part, that the "filing date . . . shall be the date on which . . . any required drawing are received in the Patent and Trademark Office." 35 U.S.C. 113 (first sentence) in turn provides that an "applicant shall furnish a drawing where necessary for the understanding of the subject matter sought to be patented.

Applications filed without drawings are initially inspected to determine whether a drawing is referred to in the specification, and if not, whether a drawing is necessary for the understanding of the invention. 35 U.S.C. 113 (first sentence).

It has been USPTO practice to treat an application that contains at least one process or method claim as an application for which a drawing is not necessary for an understanding of the invention under 35 U.S.C. 113 (first sentence). The same practice has been followed in composition applications.

* * *

A nonprovisional application having at least one claim, or a provisional application having at least some disclosure, directed to the subject matter discussed above for which a drawing is usually not considered essential for a filing date, not describing drawing figures in the specification, and filed without drawings will simply be processed for examination, so long as the application contains something that can be construed as a written description. A nonprovisional application having at least one claim, or a provisional application having at least some disclosure, directed to the subject matter discussed above for which a drawing is usually not considered essential for a filing date, describing drawing figure(s) in the specification, but filed without drawings will be treated as an application filed without all of the drawing figures referred to in the specification as discussed in MPEP § 601.01(g), so long as the application contains something that can be construed as a written description. In a situation in which the appropriate Technology Center (TC) determines that drawings are necessary under 35 U.S.C. 113 (first sentence) the filing date issue will be reconsidered by the USPTO.

* * *

[2] MPEP §503 provides in pertinent part:

§503 Application Number and Filing Receipt

* * *

A return postcard should be attached to *each* patent application for which a receipt is desired. It is important that the return postcard itemize all of the components of the application. If the postcard does not itemize each of the components of the application, it will not serve as evidence that any component which was not itemized was received by the United States Patent and Trademark Office (USPTO). It should be recognized that the identification of an application by application number does not necessarily signify that the USPTO has accepted the application as complete (37 C.F.R. §1.53(a)).

* * *

RETURN POSTCARD

Thus, the instant petition matter is **dismissed**, and Petitioner is instructed to specify his request within the terms and alternatives set forth in the 18 October Notice.

Further correspondence with respect to this matter should be addressed as follows:

By mail: Commissioner for Patents
P.O. Box 1450
Alexandria, VA 22313-1450

By FAX: IFW Formal Filings
(703) 872-9306
ATTN.: Office of Petitions

By hand: Mail Stop: Petition
Customer Service Window
Randolph Building
401 Dulany Street
Alexandria, VA 22314

If a receipt of any item (e.g., paper or fee) filed in the USPTO is desired, it may be obtained by enclosing with the paper a self-addressed postcard specifically identifying the item. The USPTO will stamp the receipt date on the postcard and place it in the outgoing mail. A postcard receipt which itemizes and properly identifies the items which are being filed serves as *prima facie* evidence of receipt in the USPTO of all the items listed thereon on the date stamped thereon by the USPTO.

The identifying data on the postcard should be so complete as to clearly identify the item for which receipt is requested. For example, the postcard should identify the applicant's name, application number (if known), confirmation number (if known), filing date, interference number, title of the invention, etc. The postcard should also identify the type of paper being filed, e.g., new application, affidavit, amendment, notice of appeal, appeal brief, drawings, fees, motions, supplemental oath or declaration, petition, etc., and the number of pages being submitted. If a new application is being filed, all parts of the application being submitted should be separately listed on the postcard, e.g., the number of pages of specification (including written description, claims and abstract), number of claims, number of sheets of drawings, number of pages of oath/declaration, number of pages of cover sheet (provisional application).

The postcard receipt will not serve as *prima facie* evidence of receipt of any item which is not adequately itemized on the postcard. For example, merely listing on the postcard "a complete application" or "patent application" will not serve as a proper receipt for each of the required components of an application (e.g., specification (including claims), drawings (if necessary), oath or declaration and the application filing fee) or missing portions (e.g., pages, sheets of drawings) of an application if one of the components or portion of a component is found to be missing by the USPTO. Each separate component should be specifically and properly itemized on the postcard. Furthermore, merely incorporating by reference in the postcard receipt, the items listed in a transmittal letter will not serve as *prima facie* evidence of receipt of those items.

The person receiving the item(s) in the USPTO will check the listing on the postcard against the item(s) being filed to be sure they are properly identified and that all the items listed on the postcard are presently being submitted to the USPTO. If any of the items listed on the postcard are not being submitted to the USPTO, those items will be crossed off and the post-card initialed by the person receiving the items. Upon return of a postcard receipt from the USPTO, the postcard receipt should be promptly reviewed by the person who filed the items to ensure that every item specifically denoted on the postcard was received by the USPTO. If the postcard receipt has been annotated to indicate that a particular item denoted on the postcard was not received by the USPTO, the postcard receipt will not serve as *prima facie* evidence of receipt of that item in the USPTO. (Emphasis supplied.)

Telephone inquiries concerning this decision may be directed to the undersigned at (703)305-9199.

John J. Gillon, Jr.
Senior Attorney
Office of Petitions

UNITED STATES PATENT AND TRADEMARK OFFICE

COMMISSIONER FOR PATENTS
UNITED STATES PATENT AND TRADEMARK OFFICE
P.O. BOX 1450
ALEXANDRIA, VA 22313-1450
www.uspto.gov

JJGJR.: 03-05

Paper No: __

PILLSBURY WINTHROP, LLP
P.O. BOX 10500
MCLEAN VA 22102

COPY MAILED

MAR 3 1 2005

OFFICE OF PETITIONS

In re Application of
Pril
Application No. 10/899,437
Filing Date: 27 July, 2004 (Deposit)
Attorney Docket No. 081468-0310507

DECISION ON PETITION

This is a decision on the papers filed on 15 December, 2004, considered as a petition to obtain a filing date of 27 July, 2004, under 37 C.F.R. §1.53 for the instant application.

The petition under 37 C.F.R. §1.53 is **GRANTED**.

BACKGROUND

This nonprovisional application was deposited on 27 July, 2004.

On 18 October, 2004, the Office mailed a "Notice of Incomplete Nonprovisional Application," (the 8 October Notice) and indicated that a filing date had not been granted because the application had been deposited without drawings as required under 35 U.S.C. §113 (first sentence).

The 18 October Notice specified a reply period of two (2) months, and also informed Petitioner that the application would receive the filing date consistent with the submission of required drawings; or that Petitioner might evidence either that drawings were not necessary for the understanding of the invention or the application as submitted otherwise satisfied the statutory requirements for a filing date.

Rather than selecting one of those alternatives, Petitioner submitted on 15 December, 2004, four (4) sheets of drawings containing Figs. 1 - 4 as "Substitute drawing sheets." Further, Petitioner's 15 December, 2004, filing did not state that he wished to obtain a filing date in the absence of the

drawings. Moreover, the caption of the 15 December, 2004, filing included the following: "Filed: July 27, 2004,"–thus it was not clear that Petitioner wished to have a filing date later than the presently stated deposit date of 27 July, 2004. Therefore, the petition was dismissed on 9 February, 2005, and Petitioner was given one month to clarify his argument(s) and supporting documentation.

With the Petition filed on 7 March, 2005, Petitioner specifically sought a 27 July, 2004, filing date for the application and drawings (Figs. 1 -14), and supported that position with, *inter alia*, a date stamped ("072404") receipt card (see: MPEP §503[1]), which provides, in pertinent part:

* * *

29 No. of Pages Application (Spec + Claim(s) + Abstract
29 No. of Numbered Claims Only
1 No. of Priority Documents
4 No. of Sheets of Drawings (Fig(s) 1 - 4)

* * *

[1] MPEP §503 provides in pertinent part:

§503 Application Number and Filing Receipt

* * *

A return postcard should be attached to *each* patent application for which a receipt is desired. It is important that the return postcard itemize all of the components of the application. If the postcard does not itemize each of the components of the application, it will not serve as evidence that any component which was not itemized was received by the United States Patent and Trademark Office (USPTO). It should be recognized that the identification of an application by application number does not necessarily signify that the USPTO has accepted the application as complete (37 C.F.R. §1.53(a)).

* * *

RETURN POSTCARD

If a receipt of any item (e.g., paper or fee) filed in the USPTO is desired, it may be obtained by enclosing with the paper a self-addressed postcard specifically identifying the item. The USPTO will stamp the receipt date on the postcard and place it in the outgoing mail. A postcard receipt which itemizes and properly identifies the items which are being filed serves as *prima facie* evidence of receipt in the USPTO of all the items listed thereon on the date stamped thereon by the USPTO.

The identifying data on the postcard should be so complete as to clearly identify the item for which receipt is requested. For example, the postcard should identify the applicant's name, application number (if known), confirmation number (if known), filing date, interference number, title of the invention, etc. The postcard should also identify the type of paper being filed, e.g., new application, affidavit, amendment, notice of appeal, appeal brief, drawings, fees, motions, supplemental oath or declaration, petition, etc., and the number of pages being submitted. If a new application is being filed, all parts of the application being submitted should be separately listed on the postcard, e.g., the number of pages of specification (including written description, claims and abstract), number of claims, number of sheets of drawings, number of pages of oath/declaration, number of pages of cover sheet (provisional application).

The postcard receipt will not serve as *prima facie* evidence of receipt of any item which is not adequately itemized on the postcard. For example, merely listing on the postcard "a complete application" or "patent application" will not serve as a proper receipt for each of the required components of an application (e.g., specification (including claims), drawings (if necessary), oath or declaration and the application filing fee) or missing portions (e.g., pages, sheets of drawings) of an application if one of the components or portion of a component is found to be missing by the USPTO. Each separate component should be specifically and properly itemized on the postcard. Furthermore, merely incorporating by reference in the postcard receipt, the items listed in a transmittal letter will not serve as *prima facie* evidence of receipt of those items.

The person receiving the item(s) in the USPTO will check the listing on the postcard against the item(s) being filed to be sure they are properly identified and that all the items listed on the postcard are presently being submitted to the USPTO. If any of the items listed on the postcard are not being submitted to the USPTO, those items will be crossed off and the post-card initialed by the person receiving the items. Upon return of a postcard receipt from the USPTO, the postcard receipt should be promptly reviewed by the person who filed the items to ensure that every item specifically denoted on the postcard was received by the USPTO. If the postcard receipt has been annotated to indicate that a particular item denoted on the postcard was not received by the USPTO, the postcard receipt will not serve as *prima facie* evidence of receipt of that item in the USPTO. (Emphasis supplied.)

Because Petitioner's receipt card adequately itemized the contents of the application on the receipt card, it is concluded that the application, including four (4) sheets of drawings were deposited with the Office on 27 July, 2004, and the drawings subsequently were misplaced in the Office.

Accordingly, the application, as filed, is entitled to a filing date.

The "Notice of Incomplete Nonprovisional Application" mailed on 18 October, 2004, was sent in error and is hereby vacated to the extent that it stated that the application was incomplete.

The petition is **granted** and the petition fee waived.

This application is released to OIPE for further processing with a filing date of 27 July, 2004, for the entire application and in particular for the 4 sheets of drawings, using:

- **the 29 pages of specification (description, claims and abstract) deposited on 27 July, 2004; and**
- **the 4 sheets of drawings (Figs. 1 - 4) deposited on 15 December, 2004; and**

with direction to OIPE to correct Office records and provide to Petitioner a corrected filing receipt setting forth a filing date of 27 July, 2004, and reflecting therein that 29 pages of specification (description, claims and abstract) and 4 sheets of drawings were present on filing.

Telephone inquiries specific to this matter should be directed to the undersigned at 272-3214.

John J. Gillon, Jr.
Senior Attorney
Office of Petitions

UNITED STATES PATENT AND TRADEMARK OFFICE

Commissioner for Patents
United States Patent and Trademark Office
P.O. Box 1450
Alexandria, VA 22313-1450
www.uspto.gov

MBHB
300 South Wacker Drive
Suite 3100
Chicago, Illinois 60606

MAILED

MAY 19 2010

OFFICE OF PETITIONS

In re Patent No. 7,482,366	:
Bayne et al.	: DECISION UPON REMAND AND
Issue Date: January 27, 2009	: RECONSIDERATION OF
Application No. 10/899,458	: PATENT TERM ADJUSTMENT
Filed: July 24, 2004	: AND NOTICE OF INTENT
Attorney Docket No. 06-002-B	: TO ISSUE CERTIFICATE OF
Title: Modulators of LXR	: CORRECTION
	:

This is a decision following remand from the District Court for the District of Columbia regarding the patent term adjustment indicated on the above-identified patent. The Court remanded this matter to the U.S. Patent and Trademark Office for recalculation of the patent term adjustment in accordance with the decision in Wyeth & Elan Pharma Int'l Ltd. v. Kappos, 591 F.3d 1364 (Fed. Cir. 2010).

The patent term adjustment indicated on the above-identified patent has been recalculated as directed by the Court. The term of the above-identified patent is extended or adjusted by one thousand two hundred and sixteen (1216) days.

The application is being forwarded to the Certificates Branch for issuance of a certificate of correction indicating that the term of the above-identified patent is extended or adjusted by one thousand two hundred (1216) days.

Telephone inquiries specific to this matter should be directed to Senior Legal Advisor, Kery A. Fries at (571) 272-7757.

/Kery A. Fries/

Kery A. Fries
Senior Legal Advisor Attorney
Office of Patent Legal Administration
Office of Associate Commissioner
For Patent Examination Policy

Enclosure: Copy of DRAFT Certificate of Correction

UNITED STATES PATENT AND TRADEMARK OFFICE

CERTIFICATE OF CORRECTION

PATENT : 7,482,366 B2

DATED : **January 27, 2009** **DRAFT**

INVENTOR(S) : Bayne et al

It is certified that error appears in the above-identified patent and that said Letters Patent is hereby corrected as shown below:

On the cover page,

[*] Notice: Subject to any disclaimer, the term of this patent is extended or adjusted under 35 USC 154(b) by 687 days

Delete the phrase "by 687 days" and insert – by 1216 days--

Day : Wednesday

PALM INTRANET

Date: 5/12/2010
Time: 09:54:41

PTA Calculations for Application: 10/899458			
Application Filing Date:	07/24/2004	PTO Delay (PTO):	692
Issue Date of Patent:	01/27/2009	Three Years:	0
Pre-Issue Petitions:	0	Applicant Delay (APPL):	5
Post-Issue Petitions:	0	Total PTA (days):	1216
PTO Delay Adjustment:	529		

File Contents History

Number	Date	Contents Description	PTO	APPL	START
70	05/12/2010	ADJUSTMENT OF PTA CALCULATION BY PTO	529		
64.5	01/07/2009	PTA 36 MONTHS			
64	01/27/2009	PATENT ISSUE DATE USED IN PTA CALCULATION			
63	12/19/2008	EXPORT TO FINAL DATA CAPTURE			
62	12/18/2008	DISPATCH TO FDC			
61	12/18/2008	APPLICATION IS CONSIDERED READY FOR ISSUE			
60	12/17/2008	ISSUE FEE PAYMENT VERIFIED			
59	12/17/2008	ISSUE FEE PAYMENT RECEIVED			
58	11/26/2008	FINISHED INITIAL DATA CAPTURE			
57	10/03/2008	SEQUENCE FORWARDED TO PUBS ON TAPE			
56	09/26/2008	EXPORT TO INITIAL DATA CAPTURE			
54	09/18/2008	MAIL NOTICE OF ALLOWANCE			
53	09/16/2008	ISSUE REVISION COMPLETED			
52	09/16/2008	DOCUMENT VERIFICATION			
51	09/16/2008	NOTICE OF ALLOWANCE DATA VERIFICATION COMPLETED			
50	09/16/2008	CASE DOCKETED TO EXAMINER IN GAU			
49	09/15/2008	EXAMINER'S AMENDMENT COMMUNICATION			
48	09/15/2008	NOTICE OF ALLOWABILITY			
47	06/30/2008	DATE FORWARDED TO EXAMINER			
46	05/19/2008	RESPONSE AFTER NON-FINAL ACTION		5	44
45	05/19/2008	REQUEST FOR EXTENSION OF TIME - GRANTED			
44	02/14/2008	MAIL NON-FINAL REJECTION			
43	02/13/2008	NON-FINAL REJECTION			

42	02/03/2006	INFORMATION DISCLOSURE STATEMENT CONSIDERED			
41	07/31/2006	INFORMATION DISCLOSURE STATEMENT CONSIDERED			
40	11/08/2006	INFORMATION DISCLOSURE STATEMENT CONSIDERED			
39	05/07/2007	INFORMATION DISCLOSURE STATEMENT CONSIDERED			
38	12/04/2007	DATE FORWARDED TO EXAMINER			
37	11/16/2007	RESPONSE TO ELECTION / RESTRICTION FILED			
36	11/16/2007	REQUEST FOR EXTENSION OF TIME - GRANTED			
35	08/17/2007	MAIL RESTRICTION REQUIREMENT	692		-1
34	08/16/2007	REQUIREMENT FOR RESTRICTION / ELECTION			
32	08/11/2007	CASE DOCKETED TO EXAMINER IN GAU			
31.7	05/07/2007	ELECTRONIC INFORMATION DISCLOSURE STATEMENT			
31	05/07/2007	INFORMATION DISCLOSURE STATEMENT (IDS) FILED			
30	02/16/2007	CORRESPONDENCE ADDRESS CHANGE			
29	12/19/2006	CORRESPONDENCE ADDRESS CHANGE			
28.7	11/08/2006	ELECTRONIC INFORMATION DISCLOSURE STATEMENT			
28	11/08/2006	INFORMATION DISCLOSURE STATEMENT (IDS) FILED			
27	09/14/2006	CORRESPONDENCE ADDRESS CHANGE			
26	07/31/2006	REFERENCE CAPTURE ON IDS			
25.7	07/31/2006	INFORMATION DISCLOSURE STATEMENT (IDS) FILED			
25	07/31/2006	INFORMATION DISCLOSURE STATEMENT (IDS) FILED			
23.7	02/03/2006	INFORMATION DISCLOSURE STATEMENT (IDS) FILED			
23	02/03/2006	INFORMATION DISCLOSURE STATEMENT (IDS) FILED			
22	09/13/2005	IFW TSS PROCESSING BY TECH CENTER COMPLETE			
21	09/13/2005	CASE DOCKETED TO EXAMINER IN GAU			
20	12/13/2004	PRELIMINARY AMENDMENT			
19	01/04/2005	APPLICATION RETURN FROM OIPE			
18	01/04/2005	APPLICATION RETURN TO OIPE			

17	01/03/2005	APPLICATION DISPATCHED FROM OIPE			
16	01/04/2005	APPLICATION IS NOW COMPLETE			
15	12/13/2004	PAYMENT OF ADDITIONAL FILING FEE/PREEXAM			
14	07/24/2004	CLAIM PRELIMINARY AMENDMENT			
13	12/13/2004	A SET OF SYMBOLS AND PROCEDURES, PROVIDED TO THE PTO ON A SET OF COMPUTER LISTINGS, THAT DESCRIBE IN			
12	12/13/2004	A STATEMENT BY ONE OR MORE INVENTORS SATISFYING THE REQUIREMENT UNDER 35 USC 115, OATH OF THE APPLIC			
11	12/22/2004	CRF IS GOOD TECHNICALLY / ENTERED INTO DATABASE			
10	10/13/2004	NOTICE MAILED--APPLICATION INCOMPLETE--FILING DATE ASSIGNED			
5	09/16/2004	CLEARED BY L&R (LARS)			
4	09/08/2004	REFERRED TO LEVEL 2 (LARS) BY OIPE CSR			
3	09/08/2004	CASE CLASSIFIED BY OIPE			
2	08/16/2004	IFW SCAN & PACR AUTO SECURITY REVIEW			
1	07/24/2004	INITIAL EXAM TEAM NN			

Search Another: Application# Search

EXPLANATION OF PTA CALCULATION

EXPLANATION OF PTE CALCULATION

To go back, right click here and select Back. To go forward, right click here and select Forward. To refresh, right click here and select Refresh.

Back to OASIS | Home page

UNITED STATES PATENT AND TRADEMARK OFFICE

Commissioner for Patents
United States Patent and Trademark Office
P.O. Box 1450
Alexandria, VA 22313-1450
www.uspto.gov

AT&T CORP.
ROOM 2A207
ONE AT&T WAY
BEDMINSTER NJ 07921

COPY MAILED

OCT 1 0 2008

OFFICE OF PETITIONS

In re Application of	:	
Evans et al.	:	
Application No. 10/899,478	:	ON PETITION
Filed: July 26, 2004	:	
Attorney Docket No. 2003-0206A	:	

This is a decision on the petition under 37 C.F.R. § 1.137(b), filed September 12, 2008, to revive the above-identified application.

The petition is **GRANTED**.

The petition satisfies the requirements of 37 CFR 1.137(b) in that petitioner has supplied (1) the reply in the form of the Issue Fee Transmittal with payment of the issue fee, (2) the petition fee, and (3) a proper statement of unintentional delay.

There is no indication that the person signing the instant petition was ever given a power of attorney or authorization of agent to prosecute the above-identified application. If the person signing the instant petition desires to receive future correspondence regarding this application, the appropriate power of attorney or authorization of agent must be submitted. While a courtesy copy of this decision is being mailed to the person signing the instant petition, all future correspondence will be directed solely to the address currently of record until such time as appropriate instructions are received to the contrary.

It is not apparent whether the statement of unintentional delay was signed by a person who would have been in a position of knowing that the entire delay in filing the required reply from the due date for the reply until the filing of a grantable petition pursuant to 37 CFR 1.137(b) was unintentional. Nevertheless, in accordance with 37 CFR 10.18, the statement is accepted as constituting a certification of unintentional delay. However, in the event that petitioner has no knowledge that the delay was unintentional, petitioner must make such an inquiry to ascertain that, in fact, the delay was unintentional. If petitioner discovers that the delay was intentional, petitioner must notify the Office.

Telephone inquiries concerning this decision should be directed to the undersigned at (571) 272-3206.

This matter is being referred to the Office of Data Management for processing into a patent.

Liana Walsh
Petitions Examiner
Office of Petitions

cc: WEINICK & ASSOCIATES, LLC
615 WEST MT. PLEASANT AVENUE
LIVINGSTON, NJ 07039

UNITED STATES PATENT AND TRADEMARK OFFICE

COMMISSIONER FOR PATENTS
UNITED STATES PATENT AND TRADEMARK OFFICE
P.O. BOX 1450
ALEXANDRIA, VA 22313-1450
www.uspto.gov

IBM CORPORATION, T.J. WATSON RESEARCH CENTER
P.O. BOX 218
YORKTOWN HEIGHTS NY 10598

COPY MAILED

APR 14 2008

OFFICE OF PETITIONS

In re Application of
Moskowitz, et al.
Application No. 10/899,489
Filed: July 26, 2004
Attorney Docket No. YOR920040319US1

DECISION ON PETITION

This is a decision on the petition under the unintentional provisions of 37 CFR 1.137(b), filed September 28, 2007, to revive the above-identified application.

The petition is GRANTED.

This application became abandoned January 3, 2007 for failure to timely pay the issue and publication fees, as required by the Notice of Allowance and Fee(s) Due (Notice), mailed October 2, 2006. The Notice set a three month statutory period of time for reply. Notice of Abandonment was mailed February 5, 2007.

The petition satisfies the requirements of 37 CFR 1.137(b) in that petitioner has supplied (1) the reply in the form of payment of the issue fee and the publication fee, (2) the required petition fee; and (3) a proper statement of unintentional delay.

There is no indication that the person signing the petition was ever given a power of attorney to prosecute the application. If the person signing the petition desires to receive future correspondence regarding this application, the appropriate power of attorney documents must be submitted. While a courtesy copy of this decision is being mailed to the person signing the petition, all future correspondence will be directed to the address currently of record until appropriate instructions are received.

Telephone inquiries concerning this decision should be directed to the undersigned at (571) 272-3205.

This application is being referred to Publishing Division for processing into a patent.

Alesia M. Brown
Petitions Attorney
Office of Petitions

CC: JOHN L, ROGITZ
750 B STREET, SUITE 3120
SAN DIEGO, CA 92101

UNITED STATES PATENT AND TRADEMARK OFFICE

Commissioner for Patents
United States Patent and Trademark Office
P.O. Box 1450
Alexandria, VA 22313-1450
www.uspto.gov

ATTN: JEFFREY A. PROEHL
LEONARD & PROEHL, PROF. L.L.C.
SUITE 250
3500 S. FIRST AVE. CIRCLE
SIOUX FALLS SD 57105-5807

COPY MAILED

NOV 0 2 2004

OFFICE OF PETITIONS

In re Application of
Lyndon J. Hurley
Application No. 10/899,501
Filed: October 5, 2004
Attorney Docket No. 24-0137

: DECISION GRANTING
: PETITION

This is a decision on the petition filed on October 5, 2004, requesting that the above-identified application be accorded a filing date of receipt of omitted Figures 13-15, as part of the original disclosure.

On July 26, 2004, applicant filed the above-identified application. However, on September 17, 2004, the Office of Initial Patent Examination mailed a "Notice of Omitted Items," stating that a filing date had been assigned in the application; however, Figures 13-15 described in the specification appeared to be omitted from the application.

In response, on October 5, 2004, applicant filed the present petition to accord a filing date of receipt of the omitted Figures as part of the original disclosure as well as a copy of Figures13-15 and a supplemental declaration. The petition states that applicant hereby petitions under 37 CFR 1.182 to accept the date of submission of the missing drawing Figures as the application filing date.

The petition is **GRANTED**.

The application file will be forwarded to the Office of Initial Patent Examination for reprocessing with a filing date of October 5, 2004, using the twelve (12) sheets of drawings containing Figures 1-12 filed with the original application papers on July 26, 2004, and the three (3) sheets of drawings containing Figures 13-15 filed on October 5, 2004, and an indication in the Office records that fifteen (15) sheets of drawings were present on filing.

Telephone inquiries specific to this matter should be directed to the undersigned Petitions Attorney at (571) 272-3212.

Patricia Faison-Ball

Patricia Faison-Ball
Senior Petitions Attorney
Office of Petitions

UNITED STATES PATENT AND TRADEMARK OFFICE

COMMISSIONER FOR PATENTS
UNITED STATES PATENT AND TRADEMARK OFFICE
P.O. BOX 1450
ALEXANDRIA, VA 22313-1450
www.uspto.gov

MARK BREINHOLT
1576 E. PALO VERDE WAY # 32
SALT LAKE, UT 84121

COPY MAILED

JUL 2 0 2007

OFFICE OF PETITIONS

In re Application of
Mark W. Breinholt
Application No. 10/899,525
Filed: July 27, 2004
Attorney Docket No. None

ON PETITION

This is a decision in response to the petition, filed February 8, 2007, to revive the above-identified application under the provisions of 37 CFR 1.137(b).

The application became abandoned for a failure to reply in a timely manner to a non-final Office action mailed July 1, 2005. A Notice of Abandonment was mailed on February 6, 2006. On February 8, 2007, the present petition was filed.

The petition is found to satisfy the requirements of 37 CFR 1.137(b).

Accordingly, the petition is **GRANTED**.

The application is being referred to Technology Center AU 3711 for consideration of the response filed February 8, 2007.

The application file does not indicate a change of address has been filed in this case, although the address given on the petition differs from the address of record. If appropriate, a change of address should be filed in this case in accordance with MPEP 601.03. A courtesy copy of this decision is being mailed to the address noted on the petition. However, until otherwise instructed, all future correspondence regarding this application will be mailed solely to the address of record.

Telephone inquiries concerning this decision should be directed to the undersigned at (571) 272-3204. Inquiries relating to further prosecution should be directed to the Technology Center.

Sherry D. Brinkley
Petitions Examiner
Office of Petitions

cc: MARK BREINHOLT
11902 BLUFF VIEW DR.
SANDY, UTAH 84092

UNITED STATES PATENT AND TRADEMARK OFFICE

Commissioner for Patents
United States Patent and Trademark Office
P.O. Box 1450
Alexandria, VA 22313-1450
www.uspto.gov

GEORGE L. GREENFIELD
WOLF, GREENFIELD & SACKS, P.C.
600 ATLANTIC AVENUE
BOSTON, MA 02210

COPY MAILED

SEP 20 2007

OFFICE OF PETITIONS

In re Application of	:	
Michael W. Forest et al.	:	
Application No. 10/899,536	:	DECISION ON PETITION
Filed: July 26, 2004	:	TO MAKE SPECIAL UNDER
Attorney Docket No. E0392.70000US01	:	37 CFR 1.102(c)(1)
	:	

This is a decision on the petition under 37 CFR 1.102(c)(1), filed August 2, 2007, to make the above-identified application special based on applicant's age as set forth in M.P.E.P. § 708.02, Section IV.

The petition is **GRANTED**.

A grantable petition to make an application special under 37 CFR 1.102(c)(1) and MPEP § 708.02, Section IV: Applicant's Age must be accompanied by evidence showing that at least one of the applicants is 65 years of age, or more, such as a birth certificate or a statement by applicant. No fee is required

The instant petition includes a declaration by the applicant. Accordingly, the above-identified application has been accorded "special" status.

Telephone inquiries concerning this decision should be directed to Kimberly Inabinet at 571-272-4618.

All other inquiries concerning either the examination or status of the application should be directed to the Technology Center.

The application is being forwarded to the Technology Center Art Unit 1732 for action on the merits commensurate with this decision.

Kimberly Inabinet

Kimberly Inabinet
Petitions Examiner
Office of Petitions

UNITED STATES PATENT AND TRADEMARK OFFICE

Commissioner for Patents
United States Patent and Trademark Office
P.O. Box 1450
Alexandria, VA 22313-1450
www.uspto.gov

KONSTANTINE J. DIAMOND
4010 E. 26TH ST.
LOS ANGELES, CA 90023

COPY MAILED

JUL 14 2008

OFFICE OF PETITIONS

In re Application of :
William P. Apps :
Application No. 10/899,550 : ON PETITION
Filed: July 26, 2004 :
Attorney Docket No. RPC 0570 PUSA :

This is a decision on the petition under the unintentional provisions of 37 CFR 1.137(b), filed March 21, 2008, to revive the above-identified application.

The petition is **GRANTED**.

The application became abandoned for failure to timely file a reply within the meaning of 37 CFR 1.113 to the final Office action of June 6, 2005. The proposed reply required for consideration of a petition to revive must be a Notice of Appeal (and appeal fee required by 37 CFR 41.20(b)(2), an amendment that *prima facie* places the application in condition for allowance, a Request for Continued Examination and submission (37 CFR 1.114), or the filing of a continuing application under 37 CFR 1.53(b). See MPEP 711.03(c)(III)(A)(2). No extension of time pursuant to the provisions of 37 CFR 1.136(a) was obtained. Accordingly, the date of abandonment of this application is September 7, 2005.

The petition satisfies the requirements of 37 CFR 1.137(b) in that petitioner has supplied (1) the reply in the form of a Request for Continued Examination (RCE) and fee of $810 and the submission required by 37 CFR 1.114; (2) the petition fee of $1540; and (3) a proper statement of unintentional delay.

The file does not indicate a change of address has been submitted, although the address given on the petition differs from the address of record. If appropriate, a change of address should be filed in accordance with MPEP 601.03. A courtesy copy of this decision is being mailed to the address given on the petition; however, the Office will mail all future correspondence solely to the address of record.

Telephone inquiries concerning this decision should be directed to the undersigned at (571) 272-3210. This application is being referred to Technology Center AU 3637 for processing of the RCE and for appropriate action by the Examiner in the normal course of business on the amendment submitted in accordance with 37 CFR 1.114.

Irvin Dingle
Petition Examiner
Office of Petitions

cc: John E. Carlson
400 West Maple, Suite 350
Birmingham, MI 48009

UNITED STATES PATENT AND TRADEMARK OFFICE

Commissioner for Patents
United States Patent and Trademark Office
P.O. Box 1450
Alexandria, VA 22313-1450
www.uspto.gov

CHOATE HALL & STEWART LLP
TWO INTERNATIONAL PLACE
BOSTON, MA 02110

COPY MAILED

JUN 11 2008

OFFICE OF PETITIONS

In re Application of :
Michael J. Caplan et al :
Application No. 10/899,551 :
Filed: July 26, 2004 :
Attorney Docket No. 2006517-0016 :

ON PETITION

This is a decision on the petition under the unintentional provisions of 37 CFR 1.137(b), filed February 7, 2008, to revive the above-identified application.

The petition is **GRANTED**.

The application became abandoned for failure to timely file a reply within the meaning of 37 CFR 1.113 to the final Office action of July 27, 2007. The proposed reply required for consideration of a petition to revive must be a Notice of Appeal (and appeal fee required by 37 CFR 41.20(b)(2), an amendment that *prima facie* places the application in condition for allowance, a Request for Continued Examination and submission (37 CFR 1.114), or the filing of a continuing application under 37 CFR 1.53(b). See MPEP 711.03(c)(III)(A)(2). Three-month extension of time pursuant to the provisions of 37 CFR 1.136(a) was obtained. Accordingly, the date of abandonment of this application is January 28, 2008.

The petition satisfies the requirements of 37 CFR 1.137(b) in that petitioner has supplied (1) the reply in the form of a Request for Continued Examination (RCE) and fee of $405 and the submission required by 37 CFR 1.114; (2) the petition fee of $770; and (3) a proper statement of unintentional delay.

Telephone inquiries concerning this decision should be directed to the undersigned at (571) 272-3210.

This application is being referred to Technology Center AU 1644 for processing of the RCE and for appropriate action by the Examiner in the normal course of business on the amendment submitted in accordance with 37 CFR 1.114.

Irvin Dingle
Petition Examiner
Office of Petitions

UNITED STATES PATENT AND TRADEMARK OFFICE

Commissioner for Patents
United States Patent and Trademark Office
P.O. Box 1450
Alexandria, VA 22313-1450
www.uspto.gov

Jaime S. Vargas
751 Upland Road
Redwood City CA 94062

COPY MAILED

NOV 20 2007

OFFICE OF PETITIONS

In re Application of	:	
Jaime S. Vargas	:	
Application No. 10/899,561	:	DECISION ON PETITION
Filed: July 27, 2004	:	
Attorney Docket No. NDNV-002	:	

This is a decision on the petition under the unintentional provisions of 37 CFR 1.137(b), filed April 27, 2007, to revive the above-identified application.

The petition is **DISMISSED**.

Any request for reconsideration of this decision must be submitted within TWO (2) MONTHS from the mail date of this decision. Extensions of time under 37 CFR 1.136(a) are permitted. The reconsideration request should include a cover letter entitled "Renewed Petition under 37 CFR 1.137(b)." This is **not** a final agency action within the meaning of 5 U.S.C. § 704.

The application became abandoned for failure to timely reply within the meaning of 37 CFR 1.113 to the final Office action, mailed June 1, 2006, which set a shortened statutory period for reply of three (3) months. No extensions of time under the provisions of 37 CFR 1.136(a) were obtained. Accordingly, the application became abandoned on September 2, 2006.

A grantable petition under 37 CFR 1.137(b) must be accompanied by: (1) the required reply, unless previously filed; (2) the petition fee as set forth in 37 CFR 1.17(m); (3) a statement that the entire delay in filing the required reply from the due date for the reply until the filing of a grantable petition pursuant to 37 CFR 1.137(b) was unintentional; and (4) any terminal disclaimer (and fee as set forth in 37 CFR 1.20(d)) required by 37 CFR 1.137(d). Where there is a question as to whether either the abandonment or the delay in filing a petition under 37 CFR

1.137 was unintentional, the Director may require additional information. *See* MPEP 711.03(c)(II)(C) and (D).

The present petition fails to satisfy item (1). In this regard, 37 CFR 1.33(b) requires that amendments and other papers must be signed and that any unsigned amendment will not be entered. Accordingly, before revival of this application can be effected, the amendment must be signed.

Further correspondence with respect to this matter should be addressed as follows:

By Mail: Mail Stop PETITION
Commissioner for Patents
P. O. Box 1450
Alexandria, VA 22313-1450

By hand: U. S. Patent and Trademark Office
Customer Service Window, Mail Stop Petitions
Randolph Building
401 Dulany Street
Alexandria, VA 22314

The centralized facsimile number is **(571) 273-8300.**

Correspondence regarding this decision may also be filed through the electronic filing system of the USPTO.

To expedite consideration, petitioner may wish to contact the undersigned regarding the filing of the renewed petition under 37 CFR 1.137(b).

Telephone inquiries concerning this decision should be directed to the undersigned at (571) 272-3218.

Frances Hicks

Frances Hicks
Petitions Examiner
Office of Petitions

UNITED STATES PATENT AND TRADEMARK OFFICE

Commissioner for Patents
United States Patent and Trademark Office
P.O. Box 1450
Alexandria, VA 22313-1450
www.uspto.gov

PATENT DEPT
INTUITIVE SURGICAL, INC
1266 KIFER RD
BUILDING 101
SUNNYVALE CA 94086

COPY MAILED
FEB 0 1 2008
OFFICE OF PETITIONS

In re Application of	:	
Jaime S. Vargas	:	
Application No. 10/899,561	:	ON PETITION
Filed: July: 27, 2004	:	
Attorney Docket No. EDOV-002/US	:	

This is a decision on the renewed petition under 37 CFR 1.137(b), filed December 20, 2007, to revive the above-identified application.

The petition is **DISMISSED**.

Any request for reconsideration of this decision must be submitted within TWO (2) MONTHS from the mail date of this decision. Extensions of time under 37 CFR 1.136(a) are permitted. The reconsideration request should include a cover letter entitled "Renewed Petition under 37 CFR 1.137(b)." This is **not** a final agency action within the meaning of 5 U.S.C. § 704.

The above-identified application became abandoned for failure to submit a proper response to the final Office action mailed June 1, 2006 which set a shortened statutory period for reply of three (3) months. Accordingly, by operation of law, the above-identified application became abandoned on September 2, 2006.

A grantable petition under 37 CFR 1.137(b) must be accompanied by: (1) the required reply, unless previously filed; (2) the petition fee as set forth in 37 CFR 1.17(m); (3) a statement that the entire delay in filing the required reply from the due date for the reply until the filing of a grantable petition pursuant to 37 CFR 1.137(b) was unintentional; and (4) any terminal disclaimer (and fee as set forth in 37 CFR 1.20(d)) required by 37 CFR 1.137(d). Where there is a question as to whether either the abandonment or the delay in filing a petition under 37 CFR 1.137 was unintentional, the Commissioner may require additional information. See MPEP 711.03(c)(II)(C) and (D). The renewed petition lacks items (1) and (3).

The Petition Decision mailed November 20, 2007 notes that item (1) is missing from the petition filed April 27, 2007 in that the amendment included with that petition was unsigned. The renewed petition includes a copy of the petition and amendment filed with the April 27, 2007 petition with an additional signature page which has been signed and dated by the inventor, James S. Vargas dated December 18, 2007. However, Mr. Vargas has assigned his rights to Intuitive Surgical Inc. who has intervened in the prosecution of this application. Therefore Mr. Vargas was not authorized to sign the amendment dated December 18, 2007 and the amendment filed with the instant renewed petition is not acceptable, see 37 CFR 1.33(b). Likewise, the statement of unintentional delay also signed by Mr. Vargas is not acceptable.

Further correspondence with respect to this matter should be addressed as follows:

By Mail: Mail Stop PETITION
Commissioner for Patents
P. O. Box 1450
Alexandria, VA 22313-1450

By hand: U. S. Patent and Trademark Office
Customer Service Window, Mail Stop Petitions
Randolph Building
401 Dulany Street
Alexandria, VA 22314

The centralized facsimile number is **(571) 273-8300.**

Telephone inquiries concerning this decision should be directed to the Carl Friedman at (571) 272-6842.

David Bucci
Petitions Examiner
Office of Petitions

UNITED STATES PATENT AND TRADEMARK OFFICE

Commissioner for Patents
United States Patent and Trademark Office
P.O. Box 1450
Alexandria, VA 22313-1450
www.uspto.gov

PATENT DEPT
INTUITIVE SURGICAL, INC
1266 KIFER RD
BUILDING 101
SUNNYVALE CA 94086

COPY MAILED

APR 30 2008

OFFICE OF PETITIONS

In re Application of :
Jaime S. Vargas :
Application No. 10/899,561 :
Filed: July 27, 2004 :
Attorney Docket No. ENDOV-002/US :

ON PETITION

This is a decision on the second renewed petition under 37 CFR 1.137(b), filed February 13, 2008, to revive the above-identified application.

The petition is **GRANTED**.

The above-identified application became abandoned for failure to timely respond to the final Office action mailed June 1, 2006, which set a shortened statutory period for reply of three (3) months. Accordingly, by operation of law, the above-identified application became abandoned on September 2, 2006.

The petition decision mailed February 1, 2008 dismissed the renewed petition under 37 CFR 1.137(b) filed December 20, 2007, for failure to provide a properly executed request for RCE and a properly executed statement of unintentional delay under 37 CFR 1.137(b)(3).

The instant renewed petition includes a properly signed request for RCE and a properly signed statement of unintentional delay.

The petition satisfies the requirements of 37 CFR 1.137(b) in that petitioner has supplied (1) the reply in the form of a Request for Continued Examination (RCE) and fee of $405, and the submission required by 37 CFR 1.114; (2) the petition fee of $770; and (3) a proper statement of unintentional delay.

Telephone inquiries concerning this decision should be directed to Carl Friedman at (571) 272-6842.

This application is being referred to Technology Center AU 3739 for processing of the RCE and for appropriate action by the Examiner in the normal course of business on the amendment submitted in accordance with 37 CFR 1.114..

for David Bucci
Petitions Examiner
Office of Petitions

UNITED STATES PATENT AND TRADEMARK OFFICE

Commissioner for Patents
United States Patent and Trademark Office
P.O. Box 1450
Alexandria, VA 22313-1450
www.uspto.gov

THOMAS M. FREIBURGER
P. O. BOX 1026
TIBURON, CA 94920

COPY MAILED

MAR 19 2007

OFFICE OF PETITIONS

In re Application of	:	
Joseph Odom	:	
Application No. 10/899,562	:	DECISION ON PETITION
Filed: July 27, 2004	:	UNDER 37 CFR 1.137(b)
Attorney Docket No. 677P	:	

This is a decision on the petition, filed September 11, 2006, which is being treated as a petition under 37 CFR 1.137(b) to revive the instant nonprovisional application for failure to timely notify the U.S. Patent and Trademark (USPTO) of the filing of an application in a foreign country, or under a multinational treaty that requires publication of applications eighteen months after filing. *See* 37 CFR 1.137(f).

The petition is **GRANTED**.

Petitioner states that the instant nonprovisional application is the subject of an application filed in an eighteen-month publication country on July 18, 2005. However, the USPTO was unintentionally not notified of this filing within 45 days subsequent to the filing of the subject application in an eighteen-month publication country.

In view of the above, this application became abandoned pursuant to 35 U.S.C. § 122(b)(2)(B)(iii) and 37 CFR 1.213(c) for failure to timely notify the Office of the filing of an application in a foreign country or under a multilateral international agreement that requires publication of applications 18 months after filing.

A petition to revive an application abandoned pursuant to 35 U.S.C. 122(b)(2)(B)(iii) for failure to notify the USPTO of a foreign filing must be accompanied by:

(1) the required reply which is met by the notification of such filing in a foreign country or under a multinational treaty;
(2) the petition fee as set forth in 37 CFR 1.17(m); and
(3) a statement that the entire delay in filing the required reply from the due date of the reply until the filing of a grantable petition was unintentional.

The instant petition has been found to be in compliance with 37 CFR 1.137(b). Accordingly, the failure to timely notify the USPTO of a foreign or international filing within 45 days after the date of filing of such foreign or international application as provided by 35 U.S.C. § 122(b)(2)(B)(iii) and 37 CFR 1.213(c) is accepted as having been unintentionally delayed.

Telephone inquiries concerning this decision should be directed to the undersigned at (571) 272-3218.

This application is being referred to Publishing Division.

Frances Hicks

Frances Hicks
Petitions Examiner
Office of Petitions

UNITED STATES PATENT AND TRADEMARK OFFICE

Commissioner for Patents
United States Patent and Trademark Office
P.O. Box 1450
Alexandria, VA 22313-1450
www.uspto.gov

NOV 30 2004

MAILED

NOV 30 2004

OFFICE OF THE DIRECTOR
TC 3600

LAWRENCE L. HELWIG
319 Dogwood Avenue
Brookings, SD 57006

In re application of	:	**DECISION ON PETITION**
Lawrence L. Helwig	:	**TO MAKE SPECIAL**
Application No. 10/899,579	:	**(APPLICANT'S AGE)**
Filed: July 27, 2004	:	
For: OFF-THE-GROUND CEMETERY MEMORIALS		

This is a decision on the petition submitted on July 27, 2004, under 37 CFR 1.102 (c) to make the above-identified application special under the accelerated examination procedure set forth in MPEP 708.02, Section IV: Applicant's Age.

The petition is **DISMISSED**.

An application may be accorded special status upon the filing of a petition providing evidence showing that the applicant is at least 65 years old. Such a showing may be provided by evidence such as a birth certificate or a signed statement from the applicant.

Any request for reconsideration must be filled within TWO MONTHS of the date of this decision. Extensions of time under 37 CFR 1.136(a) are permitted. Should petitioner desire reconsideration; he should supplement this petition by a declaration or statement giving the information outlined above.

The application will be returned to the examiner's docket to await treatment on the merits in the normal order of examination.

Steven N. Meyers
Special Programs Examiner
Patent Technology Center 3600
(703) 308-3868

SNM/pav: 11/17/04

UNITED STATES PATENT AND TRADEMARK OFFICE

Commissioner for Patents
United States Patent and Trademark Office
P.O. Box 1450
Alexandria, VA 22313-1450
www.uspto.gov

MAILED
FROM DIRECTORS OFFICE

JAN 21 2005

TECHNOLOGY CENTER 3600

LAWRENCE L. HELWIG
319 Dogwood Avenue
Brookings, SD 57006

In re application of	:	**DECISION ON PETITION**
Lawrence L. Helwig	:	**TO MAKE SPECIAL**
Application No. 10/899,579	:	**(APPLICANT'S AGE)**
Filed: July 27, 2004	:	
For: OFF-THE-GROUND CEMETARY MEMORIALS		

This is a decision on the petition submitted on November 30, 2004, under 37 CFR 1.102 (c) to make the above-identified application special under the accelerated examination procedure set forth in MPEP 708.02, Section IV: Applicant's Age.

The petition is **GRANTED**.

An application may be accorded special status upon the filing of a petition providing evidence showing that the applicant is at least 65 years old. Such a showing may be provided by evidence such as a birth certificate or a statement from the applicant.

The evidence submitted with the petition is a copy of a birth certificate for Mr. Helwig indicating that he is at least 65 years of age.

The examiner is directed (1) to make an interference search for possible interfering applications, (2) to promptly examine this application out of turn, and (3) if any interfering application is discovered, to examine such application simultaneously and state in the first official letter of such application that it is being taken out of turn because of a possible interference.

Petitioner is advised that this application will continue to be special, throughout its entire prosecution and pendency, including interference or appeal, if any, only if petitioner makes a prompt ***bona fide*** effort, in response to each Office action, to place the application in condition for allowance, even if it is necessary to conduct an interview with the examiner to accomplish this purpose.

SUMMARY: Petition to Make Special **GRANTED**.

Randolph A. Reese

Randolph A. Reese
Special Programs Examiner
Patent Technology Center 3600
(703) 308-2121

RAR:pav: 01/13/05

UNITED STATES PATENT AND TRADEMARK OFFICE

Commissioner for Patents
United States Patent and Trademark Office
P.O. Box 1450
Alexandria, VA 22313-1450
www.uspto.gov

ROBERT E. KREBS
THELEN REID & PRIEST LLP
P.O. BOX 640640
SAN JOSE, CA 95164-0640

COPY MAILED

NOV 27 2007

OFFICE OF PETITIONS

In re Application of
Peter KAUFMAN
Application No. 10/899,589
Filed: July 26, 2004
Attorney Docket No. 035485-003

DECISION ON PETITION
TO WITHDRAW
FROM RECORD

This is a decision on the Request to Withdraw as attorney or agent of record under 37 C.F.R. § 1.36(b), filed August 31, 2007.

The request is **DISMISSED** as moot.

A review of the file record indicates that the power of attorney given to Thelen, Reid & Priest , LLP has been revoked by the assignee of the patent application on August 27, 2007. Accordingly, the request to withdraw under 37 C.F.R. § 1.36(b) is moot.

The correspondence address of record has been changed and the new correspondence address is the address indicated below.

Telephone inquires concerning this decision should be directed to Diane Goodwyn at 571-272-6735.

April Wise
Petitions Examiner
Office of Petitions

cc: FRANK V. DEROSA, ESQ.
CHAU & ASSOCIATES, LLC
130 WOODBURY ROAD
WOODBURY, NY 11797

UNITED STATES PATENT AND TRADEMARK OFFICE

Commissioner for Patents
United States Patent and Trademark Office
P.O. Box 1450
Alexandria, VA 22313-1450
www.uspto.gov

KENNETH L. MITCHELL
(WOODLING, KROST AND RUST)
9213 CHILLICOTHE ROAD
KIRTLAND OH 44094

COPY MAILED

FEB 08 2005

OFFICE OF PETITIONS

In re Application of Akihiko Utaki Application No. 10/899,621 Filed: July 27, 2004 Attorney Docket No. 8235	: DECISION GRANTING PETITION

This is a decision on the petition filed December 18, 2004 under 37 CFR 1.10(d), requesting that the above-identified application be accorded a filing date of July 27, 2004 rather than the presently accorded filing date of July 26, 2004.

Petitioner alleges that the application was deposited in Express Mail service on July 27, 2004. Although petitioners have not submitted a copy of the Express Mail customer label, they have provided a copy of a the tracking report printed from the USPS Internet Track & Confirm and database which shows that a mailing bearing Express Mail Label No. EV374927020US (the same Express Mail number found on the itemized transmittal sheet accompanying the original application papers located in the official file) was "Accepted" on July 27, 2004.

In view of the evidence present in the file, it is concluded that the correct date of deposit in Express Mail service is July 27, 2004 and thus is entitled to a filing date of July 27, 2004.

The petition is GRANTED. No petition fee is due and none has been charged.

This matter is being referred to the Office of Initial Patent Examination for a correction of the filing date to July 27, 2004, not July 26, 2004, and for the mailing of a corrected filing receipt.

Telephone inquiries concerning this matter may be directed to the undersigned Petitions Attorney at (571) 272-3212.

Patricia Faison-Ball

Patricia Faison-Ball
Senior Petitions Attorney
Office of Petitions

BEST AVAILABLE COPY

FILE COPY

UNITED STATES PATENT AND TRADEMARK OFFICE

UNITED STATES DEPARTMENT OF COMMERCE
United States Patent and Trademark Office
Address: COMMISSIONER FOR PATENTS
P.O. Box 1450
Alexandria, Virginia 22313-1450
www.uspto.gov

APPL NO.	FILING OR 371 (c) DATE	ART UNIT	FIL FEE REC'D	ATTY.DOCKET NO	DRAWINGS	TOT CLMS	IND CLMS
10/899,621	07/27/2004	3752	770	8235	4	2	1

CONFIRMATION NO. 6113

CORRECTED FILING RECEIPT

OC000000015191991

KENNETH L. MITCHELL
(WOODLING, KROST AND RUST)
9213 CHILLICOTHE ROAD
KIRTLAND, OH 44094

Date Mailed: 02/16/2005

Receipt is acknowledged of this regular Patent Application. It will be considered in its order and you will be notified as to the results of the examination. Be sure to provide the U.S. APPLICATION NUMBER, FILING DATE, NAME OF APPLICANT, and TITLE OF INVENTION when inquiring about this application. Fees transmitted by check or draft are subject to collection. Please verify the accuracy of the data presented on this receipt. **If an error is noted on this Filing Receipt, please write to the Office of Initial Patent Examination's Filing Receipt Corrections, facsimile number 703-746-9195. Please provide a copy of this Filing Receipt with the changes noted thereon. If you received a "Notice to File Missing Parts" for this application, please submit any corrections to this Filing Receipt with your reply to the Notice. When the USPTO processes the reply to the Notice, the USPTO will generate another Filing Receipt incorporating the requested corrections (if appropriate).**

Applicant(s)

Akihiko Utaki, Osaka, JAPAN;

Assignment For Published Patent Application

Tsubakimoto Chain Co.

Power of Attorney:

Charles Rust–18716
Kenneth Mitchell–36873

Domestic Priority data as claimed by applicant

Foreign Applications

JAPAN 2003-320322 09/11/2003

If Required, Foreign Filing License Granted: 09/21/2004

The country code and number of your priority application, to be used for filing abroad under the Paris Convention, is US10/899,621

Projected Publication Date: 03/17/2005

Non-Publication Request: No

Early Publication Request: No

Title

Cable or the like protection and guide device

Preliminary Class

138

LICENSE FOR FOREIGN FILING UNDER
Title 35, United States Code, Section 184
Title 37, Code of Federal Regulations, 5.11 & 5.15

GRANTED

The applicant has been granted a license under 35 U.S.C. 184, if the phrase "IF REQUIRED, FOREIGN FILING LICENSE GRANTED" followed by a date appears on this form. Such licenses are issued in all applications where the conditions for issuance of a license have been met, regardless of whether or not a license may be required as set forth in 37 CFR 5.15. The scope and limitations of this license are set forth in 37 CFR 5.15(a) unless an earlier license has been issued under 37 CFR 5.15(b). The license is subject to revocation upon written notification. The date indicated is the effective date of the license, unless an earlier license of similar scope has been granted under 37 CFR 5.13 or 5.14.

This license is to be retained by the licensee and may be used at any time on or after the effective date thereof unless it is revoked. This license is automatically transferred to any related applications(s) filed under 37 CFR 1.53(d). This license is not retroactive.

The grant of a license does not in any way lessen the responsibility of a licensee for the security of the subject matter as imposed by any Government contract or the provisions of existing laws relating to espionage and the national security or the export of technical data. Licensees should apprise themselves of current regulations especially with respect to certain countries, of other agencies, particularly the Office of Defense Trade Controls, Department of State (with respect to Arms, Munitions and Implements of War (22 CFR 121-128)); the Office of Export Administration, Department of Commerce (15 CFR 370.10 (j)); the Office of Foreign Assets Control, Department of Treasury (31 CFR Parts 500+) and the Department of Energy.

NOT GRANTED

No license under 35 U.S.C. 184 has been granted at this time, if the phrase "IF REQUIRED, FOREIGN FILING LICENSE GRANTED" DOES NOT appear on this form. Applicant may still petition for a license under 37 CFR 5.12, if a license is desired before the expiration of 6 months from the filing date of the application. If 6 months has lapsed from the filing date of this application and the licensee has not received any indication of a secrecy order under 35 U.S.C. 181, the licensee may foreign file the application pursuant to 37 CFR 5.15(b).

UNITED STATES PATENT AND TRADEMARK OFFICE

UNITED STATES DEPARTMENT OF COMMERCE
United States Patent and Trademark Office
Address: COMMISSIONER FOR PATENTS
P.O. Box 1450
Alexandria, Virginia 22313-1450
www.uspto.gov

PERKINS COIE LLP (BOEING)
P.O. BOX 1247
PATENT - SEA
SEATTLE, WA 98111-1247

Mail Date: 04/20/2010

Applicant	: Thomas R. Cundiff	: DECISION ON REQUEST FOR
Patent Number	: 7622066	: RECALCULATION of PATENT
Issue Date	: 11/24/2009	: TERM ADJUSTMENT IN VIEW
Appliction No	: 10/899,660	: OF WYETH AND NOTICE OF INTENT TO
Filed	: 07/26/2004	: ISSUE CERTIFICATE OF CORRECTION
		:

The Request for Recalculation is **GRANTED** to the extent indicated.

The patent term adjustment has been determined to be **1118** days. The USPTO will *sua sponte* issue a certificate of correction reflecting the amount of PTA days determined by the recalculation.

Prior to the issuance of the certificate of correction, the USPTO will afford patentee an opportunity to be heard and request reconsideration. Accordingly, patentee has **one month or thirty (30) days**, whichever is longer, to file a request for reconsideration of this patent term adjustment calculation. See 35 U.S.C. 154(b)(3)(B)(ii) and 37 CFR 1.322(a)(4). No extensions of time will be granted under 37 CFR 1.136.

Patentee should use document code PET.OP if electronically filing a request for reconsideration of this patent term adjustment calculation. The patentee must also include the information required by 37 CFR 1.705(b)(2) and the fee required by 37 CFR 1.18(e). If patentee does not file a timely request for reconsideration of this patent term adjustment calculation including the information required by 37 CFR 1.705(b)(2) and the fee required by 37 CFR 1.18(e), the USPTO will issue a certificate of correction reflecting the PTA determination noted above.

Patentee should be aware that in order to preserve the right to review in the United States District Court for the District of Columbia of the USPTO patent term adjustment determination, patentee must ensure that he or she also take the steps required under 35 U.S.C. 154(b)(4)(A) in a timely manner. Nothing in the request for recalculation should be construed as providing an alternative time frame for commencing a civil action under 35 U.S.C. 154(b)(4)(A).

Any questions concerning this decision should be directed to the Office of Patent Legal Administration at 571-272-7702.

UNITED STATES PATENT AND TRADEMARK OFFICE

UNITED STATES DEPARTMENT OF COMMERCE
United States Patent and Trademark Office
Address: COMMISSIONER FOR PATENTS
P.O. Box 1450
Alexandria, Virginia 22313-1450
www.uspto.gov

PERKINS COIE LLP (BOEING)
P.O. BOX 1247
PATENT - SEA
SEATTLE, WA 98111-1247

Mail Date: 05/17/2010

Applicant : Thomas R. Cundiff
Patent Number : 7622066
Issue Date : 11/24/2009
Application No : 10/899,660
Filed : 07/26/2004

: NOTICE CONCERNING IMPROPER
: CALCULATION OF PATENT TERM
: ADJUSTMENT BASED UPON USPTO
: IMPROPERLY MEASURING REDUCTION
: PERIOD UNDER 37 CFR 1.704(c)(10).

The United States Patent and Trademark Office (USPTO) discovered that in processing the recent recalculation decisions mailed in response to patentee's filed Request for Recalculation of Patent Term Adjustment in view of Wyeth, the USPTO improperly measured the reduction period for reductions under 37 CFR 1.704(c)(10). Pursuant to 37 CFR 1.704(c)(10), patentee's reduction begins on the date of filing the amendment under 37 CFR 1.312 ("1.312 amendment") or other related paper and ends on the date that the Office mails a response to the filing of the 1.312 amendment or other paper. It has been discovered that during the recalculation, the calculation failed to the limit the reduction to the mail date of the response to the 1.312 amendment or other paper. Accordingly, patentee's reductions were greater than warranted.

This notice **VACATES** the previous GRANTED request for recalculation and provides patentee with a revised GRANTED recalculation.

The patent term adjustment has been determined to be **1164** days. The USPTO will *sua sponte* issue a certificate of correction reflecting the amount of patent term adjustment (PTA) days determined by the recalculation.

Prior to the issuance of the certificate of correction, the USPTO will afford patentee an opportunity to be heard and request reconsideration. Accordingly, patentee has **one month or thirty (30) days** from the mail date of this notice, whichever is longer, to file a request for reconsideration of this PTA calculation. See 35 U.S.C. § 154(b)(3)(B)(ii) and 37 CFR 1.322(a)(4).

Patentee should use document code PET.OP if electronically filing a request for reconsideration of this PTA calculation. The patentee must also include the information required by 37 CFR 1.705(b)(2), and the fee required by 37 CFR 1.18(e). If patentee does not file a timely request for reconsideration of this PTA calculation, including the information required by 37 CFR 1.705(b)(2) and the fee required by 37 CFR 1.18(e), the USPTO will issue a certificate of correction reflecting the PTA determination noted above.

Patentee should be aware that in order to preserve the right of review of the USPTO's PTA determination in the United States District Court for the District of Columbia, patentee must ensure that the steps required under 35 U.S.C. § 154 (b)(4) are taken in a timely manner. Nothing in the request for recalculation should be construed as providing an alternative time frame for commencing a civil action under 35 U.S.C. § 154(b)(4).

UNITED STATES PATENT AND TRADEMARK OFFICE

Commissioner for Patents
United States Patent and Trademark Office
P.O. Box 1450
Alexandria, VA 22313-1450
www.uspto.gov

Renner, Kenner, Greive, Bobak, Taylor & Weber
106 S. Main Street
Fourth Floor, First National Tower
Akron, OH 44308

MAILED

SEP 22 2005

Technology Center 2100

In re Application of:
Lev R. FREYDEL, et al.
Application No. 10/899,667
Filed: July 27, 2004
For: DUAL/TRIPLE REDUNDANT COMPUTER SYSTEM

DECISION ON PETITION TO MAKE SPECIAL

This is a decision on the petition under 37 C.F.R. § 1.102(c) and M.P.E.P. § 708.02, Section IV: Applicant's Age, filed July 27, 2004 to make the above-identified application special.

A grantable petition to make special under 37 C.F.R. § 1.102(c) and in accordance with M.P.E.P. § 708.02, Section IV must include a showing, as by a birth certificate or the applicant's statement, that the applicant is sixty five (65) years of age or more. No fee is required for this petition.

The petition includes a statement that the applicant, Lev R. Freydel, is over sixty-five (65) years of age.

Accordingly, the petition is GRANTED. The application is being forwarded to the examiner for expedite prosecution.

For

Vincent N. Trans
Special Program Examiner
Technology Center 2100
Computer Architecture, Software, and Information Security
571-272-3613

UNITED STATES PATENT AND TRADEMARK OFFICE

Commissioner for Patents
United States Patent and Trademark Office
P.O. Box 1450
Alexandria, VA 22313-1450
www.uspto.gov

JAN 25 2005

Nutter McClennen & Fish LLP
World Trade Center West
155 Seaport Boulevard
Boston, MA 02210-2604

In re Application of	: DECISION ON PETITION
Robert E. Simonson	: TO MAKE SPECIAL
Serial No. : 10/899,707	: (INFRINGEMENT)
Filed : July 26, 2004	:
For : Non Cannulated Dilators	:

This is a decision on the petition under C.F.R. § 1.102(d) filed August 30, 2004 to make the above-identified application special. The petition requests that the above-identified application be made special under the procedure set forth in M.P.E.P § 708.02, item II: Infringement.

MPEP 708.02 states that a Petition to Make Special based on Infringement must have the following: (1) the appropriate petition fee under 37 CFR 1.17(h); (2) a statement by the assignee, applicant, or attorney alleging: (A) that there is an infringing device or product actually on the market; (B) that a rigid comparison of the alleged infringing device or product with the claims of the application has been made, and that, in his or her opinion, some of the claims are unquestionably infringed; and (C) that he or she has made a careful and thorough search of the prior art, or has good knowledge of the prior art, and has sent a copy of the references deemed most closely related to the subject matter encompassed by the claims.

The petition filed August 30, 2004 includes all of the requirements above and, therefore, the petition is **GRANTED**.

The examiner is directed (1) to make an interference search for possible interfering applications; (2) to promptly examine this application out of turn; and (3) if any interfering application is discovered, to examine such application simultaneously and state in the first official letter of such application that it is being taken out of turn because of a possible interference.

Petitioner is advised that this application will continue to be special, throughout its entire prosecution and pendency, including interference and appeal, if any, only if petitioner makes a prompt *bona fide* effort, in response to each Office action, to place the application in condition for allowance, even if it is necessary to conduct an interview with the examiner to accomplish this purpose.

Richard A. Bertsch

Richard A. Bertsch, Director
Technology Center 3700
Phone: (571) 272-3750

UNITED STATES PATENT AND TRADEMARK OFFICE

UNITED STATES DEPARTMENT OF COMMERCE
United States Patent and Trademark Office
Address: COMMISSIONER FOR PATENTS
P.O. Box 1450
Alexandria, Virginia 22313-1450
www.uspto.gov

APPLICATION NO.	FILING DATE	FIRST NAMED INVENTOR	ATTORNEY DOCKET NO.	CONFIRMATION NO.
10/899,711	07/26/2004	Gregory B. Hale	058085.010207	6908

46560 7590 06/21/2010
THE WALT DISNEY COMPANY
C/O GREENBERG TRAURIG LLP
The Tabor Center, 1200 17th Street
Suite 2400
Denver, CO 80202

EXAMINER
HARTMAN JR, RONALD D

ART UNIT	PAPER NUMBER
2121	

NOTIFICATION DATE	DELIVERY MODE
06/21/2010	ELECTRONIC

Please find below and/or attached an Office communication concerning this application or proceeding.

The time period for reply, if any, is set in the attached communication.

Notice of the Office communication was sent electronically on above-indicated "Notification Date" to the following e-mail address(es):

santosv@gtlaw.com
DENIPMail@gtlaw.com
clairt@gtlaw.com

UNITED STATES PATENT AND TRADEMARK OFFICE

Commissioner for Patents
United States Patent and Trademark Office
P.O. Box 1450
Alexandria, VA 22313-1450
www.uspto.gov

THE WALT DISNEY COMPANY
C/O GREENBERG TRAURIG LLP
The Tabor Center, 1200 17th Street
Suite 2400
Denver CO 80202

In re Application of:
Gregory B. Hale et al.
Appl. No.: 10/899,711
Filed: July 26, 2004
Attorney Docket: 058085.010207
For: MANAGEMENT OF THE FLOW OF PASSENGERS, BAGGAGE AND CARGO IN RELATION TO TRAVEL FACILITIES

DECISION ON PETITION
UNDER 37 CFR § 1.59

This is a decision on the petition under 37 CFR § 1.59(b), filed on April 10, 2007 to expunge the Information Disclosure Statement (IDS) submitted on April 10, 2007.

The petition is **GRANTED**.

Petitioner requests that the IDS submitted on April 10, 2007 listing two letters identified in the petition be expunged from the record. Petitioner states that the letters listed on the IDS submitted on April 10, 2007 are proprietary to Applicant and the information has not been otherwise made public once received. The petition fee set forth in 37 CFR § 1.17(g) has been paid.

Applicant is required to retain the expunged material(s) for the life of any patent, which issues on the above-identified application.

The expunged materials have been scanned into image; thus, cannot be returned. However, the expunged materials have been closed from public view.

It is noted that the instant application has been published on March 24, 2005. Thus, the IDS submitted on April 10, 2007 may have already been made available to the public and subject to copying by the public. Accordingly, the Office cannot guarantee that the information being closed as a result of this decision was not previously accessed by the public.

Any inquiry concerning this decision should be directed to the undersigned whose telephone number is (571) 272-3719.

/Kakali Chaki/

Kakali Chaki
Quality Assurance Specialist
Technology Center 2100

UNITED STATES PATENT AND TRADEMARK OFFICE

UNITED STATES DEPARTMENT OF COMMERCE
United States Patent and Trademark Office
Address: COMMISSIONER FOR PATENTS
P.O. Box 1450
Alexandria, Virginia 22313-1450
www.uspto.gov

MORGAN LEWIS & BOCKIUS LLP/RAMBUS INC.
2 PALO ALTO SQUARE
3000 EL CAMINO REAL, SUITE 700
PALO ALTO, CA 94306

Mail Date: 04/20/2010

Applicant	: Sudhakar Pamarti	: DECISION ON REQUEST FOR
Patent Number	: 7599390	: RECALCULATION of PATENT
Issue Date	: 10/06/2009	: TERM ADJUSTMENT IN VIEW
Appliction No	: 10/899,720	: OF WYETH AND NOTICE OF INTENT TO
Filed	: 07/21/2004	: ISSUE CERTIFICATE OF CORRECTION
		:

The Request for Recalculation is **GRANTED** to the extent indicated.

The patent term adjustment has been determined to be **1445** days. The USPTO will *sua sponte* issue a certificate of correction reflecting the amount of PTA days determined by the recalculation.

Prior to the issuance of the certificate of correction, the USPTO will afford patentee an opportunity to be heard and request reconsideration. Accordingly, patentee has **one month or thirty (30) days**, whichever is longer, to file a request for reconsideration of this patent term adjustment calculation. See 35 U.S.C. 154(b)(3)(B)(ii) and 37 CFR 1.322(a)(4). No extensions of time will be granted under 37 CFR 1.136.

Patentee should use document code PET.OP if electronically filing a request for reconsideration of this patent term adjustment calculation. The patentee must also include the information required by 37 CFR 1.705(b)(2) and the fee required by 37 CFR 1.18(e). If patentee does not file a timely request for reconsideration of this patent term adjustment calculation including the information required by 37 CFR 1.705(b)(2) and the fee required by 37 CFR 1.18(e), the USPTO will issue a certificate of correction reflecting the PTA determination noted above.

Patentee should be aware that in order to preserve the right to review in the United States District Court for the District of Columbia of the USPTO patent term adjustment determination, patentee must ensure that he or she also take the steps required under 35 U.S.C. 154(b)(4)(A) in a timely manner. Nothing in the request for recalculation should be construed as providing an alternative time frame for commencing a civil action under 35 U.S.C. 154(b)(4)(A).

Any questions concerning this decision should be directed to the Office of Patent Legal Administration at 571-272-7702.

SPE RESPONSE FOR CERTIFICATE OF CORRECTION

Paper No.: _____

DATE : July 27, 2007

TO SPE OF : ART UNIT 3673

SUBJECT : Request for Certificate of Correction for Appl. No./10/899737 patent no.7152930

Please respond to this request for a certificate of correction within 7 days.

Please review the requested changes/corrections as shown in the **COCIN** document(s) in the IFW application image. No new matter should be introduced, nor should the scope or meaning of the claims be changed.

Please complete the response (see below) and forward the completed response to scanning using document code **COCX**.

Magdalene Talley

Certificates of Correction Branch

703-308-9390 ext. 116

Thank You For Your Assistance

The request for issuing the above-identified correction(s) is hereby:

Note your decision on the appropriate box.

- ☐ **Approved** — **All** changes apply.
- ☒ **Approved in Part** — Specify below which changes **do not** apply.
- ☐ **Denied** — State the reasons for denial below.

Comments: The substitution of Drawing Sheet 2 has been denied since the drawing does not have the "prior art" labels.

SPE

3673

Art Unit

UNITED STATES PATENT AND TRADEMARK OFFICE

Commissioner for Patents
United States Patent and Trademark Office
P.O. Box 1450
Alexandria, VA 22313-1450
www.uspto.gov

THE PROCTER & GAMBLE COMPANY
GLOBAL LEGALDEPARTMENT – IP
SYCAMORE BUILDING – 4TH FLOOR
299 EAST SIXTH STREET
CINCINNATI OH 45202

MAILED

JAN 29 2009

OFFICE OF PETITIONS

In re Application of	:	
Baptiste Pommiers et al	:	
Application No. 10/899,745	:	DECISION ON PETITION
Filed: July 27, 2004	:	
Attorney Docket No.CM-2769	:	

This is a decision on the petition under the unintentional provisions of 37 CFR 1.137(b), filed December 9, 2008, to revive the above-identified application.

The petition is **GRANTED**.

The two-month period for filing an appeal brief under 37 CFR 41.37 (accompanied by the fee required by 37 CFR 41.20(b)(2)), runs from the date of this decision.

This application became abandoned for failure to timely file a reply within the meaning of 37 CFR 1.113 to the final Office action of April 25, 2008. The proposed reply required for consideration of a petition to revive must be a Notice of Appeal (and appeal fee required by 37 CFR 41.20(b)(2)), an amendment that *prima facie* places the application in condition for allowance, a Request for Continued Examination (RCE) and submission (37 CFR 1.114), or the filing of a continuing application under 37 CFR 1.53(b). See MPEP 711.03(c)(III)(A)(2). No extensions of time pursuant to the provisions of 37 CFR 1.136(a) were obtained. A notice of abandonment was mailed on November 13, 2008.

The petition satisfies the requirements of 37 CFR 1.137(b) in that petitioner has supplied (1) the reply in the form of a Notice of Appeal; (2) the petition fee of $1,620.00; and (3) a proper statement of unintentional delay.

Telephone inquiries concerning this decision should be directed to the undersigned at (571) 272-3208.

This application is being referred to Technology Center AU 1796 to await the filing of an appeal brief or for such other appropriate reply as may be submitted to continue prosecution of the application.

Karen Creasy
Petitions Examiner
Office of Petitions

UNITED STATES PATENT AND TRADEMARK OFFICE

COMMISSIONER FOR PATENTS
UNITED STATES PATENT AND TRADEMARK OFFICE
P.O. BOX 1450
ALEXANDRIA, VA 22313-1450
www.uspto.gov

Paper No.

Jerad G. Seurer
Wyatt, Tarrant & Combs, LLP
Suite 800
1715 Aaron Brenner Drive
Memphis, TN 38120-4367

COPY MAILED

MAY 1 0 2005

OFFICE OF PETITIONS

In re Application of	:	
Larry Pearson	:	DECISION ON
Application No. 10/899,748	:	PETITION
Filed: July 27, 2004	:	
Atty Docket No. A398242.2PUS	:	
	:	

This is a decision on the PETITION UNDER 37 CFR 1.181, which is being treated as a petition under 37 CFR §1.53(e)(2) to accord the above-identified application a filing date of July 27, 2004.

Application papers in the above-identified application were deposited on July 27, 2004. However, on October 5, 2004, the Initial Patent Examination Division (IPED) mailed a "Notice of Incomplete Nonprovisional Application," notifying applicant that the application papers had not been accorded a filing date because the application was deposited without drawings.

In reply, applicant timely filed the instant petition. Applicant asserts that the present patent application as submitted to the USPTO via the US Postal Service Express Mail service included in the original submission 7 pages of drawings. In support thereof, applicant submitted *inter alia* the front and back of their postcard receipt identifying this application by serial number, itemizing "Drawings (7 pages)" among the enclosures, bearing a United States Patent and Trademark Office

receipt date-stamp of July 27, 2004, and lacking any notation of non-receipt of any item listed. Included with the petition were "true and accurate copies" of the 7 pages of drawings.

A postcard receipt which itemizes and properly identifies the items which are being filed serves as *prima facie* evidence of receipt in the Office of all items listed thereon on the date stamped thereon by the Office. See MPEP 503. Applicant has shown that the application as filed on July 27, 2004 included seven (7) pages of drawings, and thus, is entitled to a filing date of July 27, 2004.

In view thereof, the petition is **GRANTED**.

Given the basis for granting the petition, the petition fee is being refunded to Deposit Account No. 50-2346, as authorized.

The application is being forwarded to the Office of Initial Patent Examination (OIPE) for:

- further processing with a filing date of July 27, 2004, using the application papers received in the Office on that date and the seven (7) sheets of drawings re-supplied on petition filed October 18, 2004;

- indication in Office records that seven (7) sheets of drawings were present on filing.

Applicant will receive appropriate notifications regarding the fees owed, if any, and other information in due course from OIPE.

Telephone inquiries related to this decision should be directed to the undersigned at 571-272-3219.

Nancy Johnson

Nancy Johnson
Senior Petitions Attorney
Office of Petitions

UNITED STATES PATENT AND TRADEMARK OFFICE

Commissioner for Patents
United States Patent and Trademark Office
P.O. Box 1450
Alexandria, VA 22313-1450
www.uspto.gov

WYATT, TARRANT & COMBS, LLP
1715 AARON BRENNER DRIVE
SUITE 800
MEMPHIS TN 38120-4367

MAILED

SEP 10 2009

OFFICE OF PETITIONS

In re Application of	:	
Larry E. Pearson	:	
Application No. 10/899,748	:	DECISION ON PETITION
Filed: July 27, 2004	:	
Attorney Docket No. 398242.2P	:	

This is a decision on the petition under the unintentional provisions of 37 CFR 1.137(b), filed July 29, 2009, to revive the above-identified application.

The petition is **GRANTED**.

This application became abandoned for failure to timely reply to the final Office action mailed December 12, 2008. No extensions of time under the provisions of 37 CFR 1.136(a) were obtained. Accordingly, this application became abandoned on March 13, 2009. A Notice of Abandonment was mailed June 18, 2009.

The petition satisfies the requirements of 37 CFR 1.137(b) in that petitioner has supplied (1) the reply in the form of a Request for Continued Examination (RCE) and fee of $405.00 and the submission required by 37 CFR 1.114; (2) the petition fee of $810.00; and (3) a proper statement of unintentional delay.

Telephone inquiries concerning this decision should be directed to the undersigned at (571) 272-7751.

The file is now being forwarded to Technology Center 1795 for processing of the Request for Continued Examination under 37 CFR 1.114 filed with the instant petition.

Joan Olszewski
Petitions Examiner
Office of Petitions

UNITED STATES PATENT AND TRADEMARK OFFICE

Commissioner for Patents
United States Patent and Trademark Office
P.O. Box 1450
Alexandria, VA 22313-1450
www.uspto.go

COPY MAILED

AUG 08 2006

OFFICE OF PETITIONS

Dilworth & Barrese, LLP
333 Earle Ovington Blvd.
Uniondale, NY 11553

In re Application of
Kim et al.
Application No. 10/899,769
Filed: July 27, 2004
Attorney Docket No. 678-750 DIV(P9969)

DECISION ON PETITION

This is a decision on the petition under 37 CFR 1.181, filed April 10, 2006, to withdraw the holding of abandonment for the above-identified application. The petition was recently forwarded to the Office of Petitions for a decision on the merits. The Office sincerely apologizes for any inconvenience.

On August 5, 2005, the Office mailed a nonfinal Office Action, which set a three-month shortened statutory period for reply. In the absence of a timely filed response, the application was held abandoned on November 6, 2005. A Notice of Abandonment was mailed on March 7, 2006.

In the present petition, the practitioner requested that the Office withdraw the holding of abandonment due to non-receipt of the nonfinal Office Action.

PETITION TO WITHDRAW THE HOLDING OF ABANDONMENT

A review of the record indicates no irregularity in the mailing of the nonfinal Office Action, and in the absence of any irregularity in the mailing, there is a strong presumption that the nonfinal Office Action was properly mailed to the address of record. This presumption may be overcome by a showing that the nonfinal Office action was not in fact received. The showing required to establish non-receipt of an Office communication must include a statement from the practitioner, stating that the practitioner did not receive the Office communication and attesting to the fact that a search of the file jacket and docket records indicates that the Office communication was not received. A copy of the docket record where the non-received Office communication would have been entered had it been received and docketed must be attached to and referenced in practitioner's statement. See MPEP 711.03(c)(I)(A). For example, if a three-month period for reply was set in the non-received Office communication, a copy of the docket report showing all replies docketed for a date three months from the mail date of the non-received Office communication must be submitted as documentary proof of non-receipt of the Office communication. The showing outlined above may not be sufficient if there are circumstances

that point to a conclusion that the Office communication may have been lost after receipt rather than a conclusion that the Office communication was lost in the mail (*e.g.* if the practitioner has a history of not receiving Office communications).

After reviewing the documents submitted on petition, the Office concludes that the showing of record is sufficient to warrant withdrawal of the holding of abandonment. The practitioner for applicants submitted copies of docket records where the nonfinal Office Action would have been entered had it been received and docketed. The practitioner attested to the fact that a search of the file jacket and docket records indicated that the nonfinal Office Action was not received. Accordingly, applicants presented the required showing under 37 CFR 1.181.

The petition under 37 CFR 1.181 is **GRANTED**. No petition fee is required.

Technology Center Art Unit 2133 has been advised of this decision. The matter is being referred to the Technology Center's technical support staff for mailing of a new nonfinal Office Action. The three (3) month shortened statutory time period for responding to the nonfinal Office Action will be set to run from the mailing date of the new nonfinal Office Action.

Telephone inquiries related to this decision may be directed to the undersigned at (571) 272-3211.

Christina Tartera Donnell

Christina Tartera Donnell
Senior Petitions Attorney
Office of Petitions

UNITED STATES PATENT AND TRADEMARK OFFICE

Commissioner for Patents
United States Patent and Trademark Office
P.O. Box 1450
Alexandria, VA 22313-1450
www.uspto.gov

EVAN LAW GROUP LLC
600 WEST JACKSON BLVD., SUITE 625
CHICAGO IL 60661

COPY MAILED

JUN 28 2007

OFFICE OF PETITIONS

In re Application of	:	
PELTON, Walter E.	:	
Application No. 10/899,788	:	DECISION ON PETITION
Filed: July 27, 2004	:	TO WITHDRAW
Attorney Docket No. **AGN01-002-CON-US**	:	FROM RECORD

This is a decision on the Request to Withdraw as attorney or agent of record under 37 C.F.R. § 1.36(b), filed November 01, 2006.

The request is **APPROVED**.

A grantable request to withdraw as attorney/agent of record must be signed by every attorney/agent seeking to withdraw or contain a clear indication that one attorney is signing on behalf of another/others. A request to withdraw will not be approved unless at least 30 (thirty) days would remain between the date of approval and the later of the expiration date of a time to file a response or the expiration date of the maximum time period which can be extended under 37 C.F.R. § 1.136(a).

The request was signed by Paul Rauch on behalf of all attorneys of record who are associated. All attorneys/agents associated have been withdrawn. Applicant is reminded that there is no attorney of record at this time.

The request to change the correspondence of record is not acceptable as the requested correspondence address is not that of: (1) the first named signing inventor; or (2) an intervening assignee of the entire interest under 37 C.F.R 3.71. All future communications from the Office will be directed to the first named signing inventor at the first copied address below until otherwise properly notified by the applicant.

Telephone inquiries concerning this decision should be directed to Tredelle Jackson at 571-272-2783.

Monica A. Graves
Petitions Examiner
Office of Petitions

cc: **WALTER E. PELTON**
3584 LANCELOT COURT
FREMONT, CA 94536

cc: **DUANE MORRIS LLP**
101 WEST BROADWAY
SUITE 900
SAN DIEGO, CA 92101-8285

UNITED STATES PATENT AND TRADEMARK OFFICE

Commissioner for Patents
United States Patent and Trademark Office
P.O. Box 1450
Alexandria, VA 22313-1450
www.uspto.gov

Honigman, Miller, Schwartz & Cohn LLP
350 East Michigan Avenue
Suite 300
Kalamazoo, MI 49007-3800

MAILED

MAR 25 2010

OFFICE OF PETITIONS

In re Patent No. 7,371,727	:
Currie et al.	: DECISION UPON REMAND AND
Issue Date: May 13, 2008	: RECONSIDERATION OF
Application No. 10/899,806	: PATENT TERM ADJUSTMENT
Filed: July 27, 2004	: AND NOTICE OF INTENT
Attorney Docket No. 223355-122533	: TO ISSUE CERTIFICATE OF CORRECTION
Title: METHODS AND COMPOSITIONS FOR THE TREATMENT OF GASTROINTESTINAL DISORDERS	:

This is a decision following remand from the District Court for the District of Columbia regarding the patent term adjustment indicated on the above-identified patent. The Court remanded this matter to the U.S. Patent and Trademark Office for recalculation of the patent term adjustment in accordance with the decision in Wyeth & Elan Pharma Int'l Ltd. v. Kappos, 591 F.3d 1364 (Fed. Cir. 2010).

The patent term adjustment indicated on the above-identified patent has been recalculated as directed by the Court. The term of the above-identified patent is extended or adjusted by seven hundred and two (702) days.

The application is being forwarded to the Certificates Branch for issuance of a certificate of correction indicating that the term of the above-identified patent is extended or adjusted by seven hundred and eleven (702) days.

Telephone inquiries specific to this matter should be directed to Senior Legal Advisor, Kery A. Fries at (571) 272-7757.

/Kery A. Fries/

Kery A. Fries
Senior Legal Advisor Attorney
Office of Patent Legal Administration
Office of Associate Commissioner
For Patent Examination Policy

Enclosure: Copy of DRAFT Certificate of Correction

UNITED STATES PATENT AND TRADEMARK OFFICE

CERTIFICATE OF CORRECTION

PATENT : 7,371,727 B2

DATED : May 13, 2008 **DRAFT**

INVENTOR(S) : Currie et al.

It is certified that error appears in the above-identified patent and that said Letters Patent is hereby corrected as shown below:

On the cover page,

[*] Notice: Subject to any disclaimer, the term of this patent is extended or adjusted under 35 USC 154(b) by 411 days

Delete the phrase "by 411 days" and insert – by 702 days--

Day : Tuesday
Date: 3/23/2010

PALM INTRANET

Time: 17:53:38

PTA Calculations for Application: 10/899806			
Application Filing Date:	07/27/2004	PTO Delay (PTO):	472
Issue Date of Patent:	05/13/2008	Three Years:	0
Pre-Issue Petitions:	0	Applicant Delay (APPL):	61
Post-Issue Petitions:	0	Total PTA (days):	702
PTO Delay Adjustment:	291		

File Contents History

Number	Date	Contents Description	PTO	APPL	START
80	03/23/2010	ADJUSTMENT OF PTA CALCULATION BY PTO	291		
69.5	04/23/2008	PTA 36 MONTHS			
69	05/13/2008	PATENT ISSUE DATE USED IN PTA CALCULATION			
68	04/04/2008	EXPORT TO FINAL DATA CAPTURE			
67	04/03/2008	FINISHED INITIAL DATA CAPTURE			
66	04/03/2008	DISPATCH TO FDC			
65	03/28/2008	APPLICATION IS CONSIDERED READY FOR ISSUE			
64	03/27/2008	ISSUE FEE PAYMENT VERIFIED			
63	03/27/2008	ISSUE FEE PAYMENT RECEIVED			
62	02/06/2008	STATEMENT FILED INDICATING A LOSS OF ENTITLEMENT TO SMALL ENTITY STATUS			
60	01/16/2008	SEQUENCE FORWARDED TO PUBS ON TAPE			
59	01/15/2008	RECEIPT INTO PUBS			
58	01/15/2008	RECEIPT INTO PUBS			
57	01/15/2008	RECEIPT INTO PUBS			
56	12/31/2007	EXPORT TO INITIAL DATA CAPTURE			
55	12/27/2007	MAIL NOTICE OF ALLOWANCE			
54	12/21/2007	ISSUE REVISION COMPLETED			
53	12/21/2007	DOCUMENT VERIFICATION			
52	12/21/2007	NOTICE OF ALLOWANCE DATA VERIFICATION COMPLETED			
51	12/19/2007	NOTICE OF ALLOWABILITY			
50	10/16/2007	DATE FORWARDED TO EXAMINER			
49	10/12/2007	RESPONSE AFTER NON-FINAL ACTION			
48	10/12/2007	TERMINAL DISCLAIMER FEE PAID			

47	10/12/2007	TERMINAL DISCLAIMER FILED			
46	07/13/2007	MAIL NON-FINAL REJECTION			
45	07/09/2007	NON-FINAL REJECTION			
44	01/31/2005	INFORMATION DISCLOSURE STATEMENT CONSIDERED			
43	11/03/2005	INFORMATION DISCLOSURE STATEMENT CONSIDERED			
42	06/13/2007	DATE FORWARDED TO EXAMINER			
41	06/12/2007	RESPONSE TO ELECTION / RESTRICTION FILED		61	38
40	06/12/2007	REQUEST FOR EXTENSION OF TIME - GRANTED			
39	06/12/2007	PRELIMINARY AMENDMENT			
38	01/12/2007	MAIL RESTRICTION REQUIREMENT	472		-1
37	01/08/2007	REQUIREMENT FOR RESTRICTION / ELECTION			
36	11/06/2006	CASE DOCKETED TO EXAMINER IN GAU			
35	11/06/2006	CASE DOCKETED TO EXAMINER IN GAU			
34	06/05/2006	PRELIMINARY AMENDMENT			
33	11/03/2005	REFERENCE CAPTURE ON IDS			
32.7	11/03/2005	INFORMATION DISCLOSURE STATEMENT (IDS) FILED			
32	11/03/2005	INFORMATION DISCLOSURE STATEMENT (IDS) FILED			
31	01/31/2005	REFERENCE CAPTURE ON IDS			
30.7	01/31/2005	INFORMATION DISCLOSURE STATEMENT (IDS) FILED			
30	01/31/2005	INFORMATION DISCLOSURE STATEMENT (IDS) FILED			
29	10/23/2006	IFW TSS PROCESSING BY TECH CENTER COMPLETE			
28	11/09/2005	RULE 47 / 48 CORRECTION OF INVENTORSHIP PAPERS FILED			
27	05/23/2005	NEW OR ADDITIONAL DRAWING FILED			
26	12/17/2004	OATH OR DECLARATION FILED (INCLUDING SUPPLEMENTAL)			
25	12/17/2004	PRELIMINARY AMENDMENT			
24	12/17/2004	NEW OR ADDITIONAL DRAWING FILED			
23	12/17/2004	SUBSTITUTE SPECIFICATION FILED			
22	08/08/2006	APPLICATION DISPATCHED FROM OIPE			
21	08/08/2006	APPLICATION IS NOW COMPLETE			
20	07/24/2006	ADDITIONAL APPLICATION FILING FEES			

19	07/24/2006	CRF DISK HAS BEEN RECEIVED BY PREEXAM / GROUP / PCT			
18	08/03/2006	CRF IS GOOD TECHNICALLY / ENTERED INTO DATABASE			
17	06/15/2006	SEQUENCE ERRORS			
16	06/05/2006	ADDITIONAL APPLICATION FILING FEES			
15	06/05/2006	CRF DISK HAS BEEN RECEIVED BY PREEXAM / GROUP / PCT			
14	06/12/2006	CRF IS FLAWED TECHNICALLY / NOT ENTERED INTO DATABASE			
13	04/12/2006	SEQUENCE ERRORS			
12	11/07/2005	APPLICANT HAS SUBMITTED NEW DRAWINGS TO CORRECT CORRECTED PAPERS PROBLEMS			
10	11/07/2005	A SET OF SYMBOLS AND PROCEDURES, PROVIDED TO THE PTO ON A SET OF COMPUTER LISTINGS, THAT DESCRIBE IN			
9	11/07/2005	A STATEMENT BY ONE OR MORE INVENTORS SATISFYING THE REQUIREMENT UNDER 35 USC 115, OATH OF THE APPLIC			
4	09/08/2004	CLEARED BY OIPE CSR			
3	09/08/2004	CASE CLASSIFIED BY OIPE			
2	08/16/2004	IFW SCAN & PACR AUTO SECURITY REVIEW			
1	07/27/2004	INITIAL EXAM TEAM NN			

Search Another: Application# Search

EXPLANATION OF PTA CALCULATION

EXPLANATION OF PTE CALCULATION

To go back, right click here and select Back. To go forward, right click here and select Forward. To refresh, right click here and select Refresh.

Back to OASIS | Home page

UNITED STATES PATENT AND TRADEMARK OFFICE

Commissioner for Patents
United States Patent and Trademark Office
P.O. Box 1450
Alexandria, VA 22313-1450
www.uspto.gov

COPY MAILED

SEP 25 2006

OFFICE OF PETITIONS

PAUL A LEIPOLD
PATENT LEGAL STAFF
EASTMAN KODAK COMPANY
343 STATE STREET
ROCHESTER NY 14650-2201

In re Application of	:	
Begley, et al.	:	
Application No. 10/899,825	:	DECISION GRANTING PETITION
Filed: July 27, 2004	:	
Attorney Docket No. 87611AEK	:	

This is a decision on the "PETITION TO SUBSTITUTE SPECIFICATION AND ACCORD FILING DATE", filed March 10, 2006, to accord the above-identified application a filing date of July 27, 2004, with the 21 pages of specification and 11 pages of claims (56 total claims) filed on July 27, 2004 as part of the original disclosure.

The petition is **GRANTED**.

Application papers in the above-identified application were filed on July 27, 2004. However, the pages of specification in the application file (including claims and abstract) are identical to those of another of applicants' applications, no. 10/899,919, also filed on July 27, 2004. Applicants contend that the specification as originally filed was mis-scanned or misplaced by the PTO.

A review of application No. 10/899,919 reveals the presence of the specification and claims for the instant application. Accordingly, it is obvious that the Office mis-scanned the instant application into application No. 10/899,919.

As such, the 21 pages of specification and 11 pages of claims (56 total claims) filed on July 27, 2004 will be entered into the application.

Given the basis for granting this petition, the $400 petition fee was not required, and has not been charged.

The application is being forwarded to the Office of Initial Patent Examination (OIPE) for further processing with a filing date of July 27, 2004, using the application papers received in the Office on that date and the 21 pages of substitute and 11 pages of claims (56 total claims) as re-supplied on March 10, 2006, and for indication in Office records that 21 pages of specification and 11 pages of claims (56 total claims) were present on filing.

Telephone inquiries related to this decision should be directed to the undersigned at 571-272-3207.

Cliff Congo
Petitions Attorney
Office of Petitions

UNITED STATES PATENT AND TRADEMARK OFFICE

Commissioner for Patents
United States Patent and Trademark Office
P.O. Box 1450
Alexandria, VA 22313-1450
www.uspto.gov

FISH & RICHARDSON PC
225 FRANKLIN ST
BOSTON MA 02110

COPY MAILED

FEB 1 1 2005

OFFICE OF PETITIONS

In re Application of	:	
Sweet, David E.	:	
Application No. 10/899,837	:	ON PETITION
Filed: July 26, 2004	:	
Attorney Docket No. 04692-036001	:	

This is a notice regarding your request for acceptance of a fee deficiency submission under 37 CFR 1.28. On September 1, 1998, the Court of Appeals for the Federal Circuit held that 37 CFR 1.28(c) is the sole provision governing the time for correction of the erroneous payment of the issue fee as a small entity. **See DH Technology v. Synergystex International, Inc. 154 F.3d 1333, 47 USPQ2d 1865 (Fed. Cir. Sept. 1, 1998).**

The Office no longer investigates or rejects original or reissue applications under 37 CFR 1.56. **1098 Off. Gaz. Pat. Office 502 (January 3, 1989)**. Therefore, nothing in this Notice is intended to imply that an investigation was done.

Your fee deficiency submission under 37 CFR 1.28 is hereby **ACCEPTED**.

Inquiries related to this communication should be directed to the undersigned at (571) 272-3282.

This matter is being referred to Technology Center 3700 for examination on the merits.

Liana Chase
Petitions Examiner
Office of Petitions
Office of the Deputy Commissioner
for Patent Examination Policy

UNITED STATES PATENT AND TRADEMARK OFFICE

Commissioner for Patents
United States Patent and Trademark Office
P.O. Box 1450
Alexandria, VA 22313-1450
www.uspto.gov

COPY MAILED

SEP 27 2007

OFFICE OF PETITIONS

Neustel Law Offices, LTD.
2534 South University Drive
Suite 4
Fargo, ND 58103

In re Application of	:	
Clarence D. Schollmeyer	:	
Application No. 10/899,842	:	DECISION ON PETITION
Filed: July 26, 2004	:	TO WITHDRAW
Attorney Docket No. SCHO-002	:	FROM RECORD
	:	

This is a decision on the Request to Withdraw as attorney or agent of record under 37 C.F.R. § 1.36(b), filed May 24, 2007.

The request is **APPROVED**.

A grantable request to withdraw as attorney/agent of record must be signed by every attorney/agent seeking to withdraw or contain a clear indication that one attorney is signing on behalf of another/others. A request to withdraw will not be approved unless at least 30 (thirty) days would remain between the date of approval and the later of the expiration date of a time to file a response or the expiration date of the maximum time period which can be extended under 37 C.F.R. § 1.136(a).

The request was signed by Michael S. Neustel on behalf of all attorneys of record. All attorneys/agents have been withdrawn. Applicant is reminded that there is no attorney of record at this time.

All future correspondence will be directed to the first named inventor Clarence D. Schollmeyer at the address indicated below.

The application became abandoned for failure to timely pay respond to the Office action mailed March 21, 2007.

Telephone inquiries concerning this decision should be directed to Terri Williams at 571-272-2991.

T. Williams
Terri Williams
Petitions Examiner
Office of Petitions

cc: **Clarence D. Schollmeyer**
790 Highway 22 North
Killdeer, ND 58640

UNITED STATES PATENT AND TRADEMARK OFFICE

UNITED STATES DEPARTMENT OF COMMERCE
United States Patent and Trademark Office
Address: COMMISSIONER FOR PATENTS
P.O. Box 1450
Alexandria, Virginia 22313-1450
www.uspto.gov

APPLICATION NUMBER	FILING OR 371 (c) DATE	FIRST NAMED APPLICANT	ATTY. DOCKET NO./TITLE
10/899,842	07/26/2004	Clarence D. Schollmeyer	SCHO-002

CONFIRMATION NO. 7808

OC000000026030870

65215
NEUSTEL LAW OFFICES, LTD.
2534 SOUTH UNIVERSITY DRIVE
SUITE 4
FARGO, ND 58103

Date Mailed: 09/26/2007

NOTICE REGARDING CHANGE OF POWER OF ATTORNEY

This is in response to the Power of Attorney filed 05/24/2007.

- The withdrawal as attorney in this application has been accepted. Future correspondence will be mailed to the new address of record. 37 CFR 1.33.

Y. Williams

Office of Initial Patent Examination (571) 272-4000, or 1-800-PTO-9199

FORMER ATTORNEY/AGENT COPY

UNITED STATES PATENT AND TRADEMARK OFFICE

Commissioner for Patents
United States Patent and Trademark Office
P.O. Box 1450
Alexandria, VA 22313-1450
www.uspto.gov

JONATHAN M. WALDMAN
WOODCOCK WASHBURN LLP
ONE LIBERTY PLACE – 46TH FLOOR
PHILADELPHIA, PA 19103

COPY MAILED

MAY 16 2006

OFFICE OF PETITIONS

In re Application of	:	
Maria Adamczyk et al	:	
Application No. 10/899,855	:	DECISION ON PETITION
Filed: July 27, 2004	:	TO WITHDRAW
Attorney Docket No. 02152C1 (BLL-0332-C)	:	FROM RECORD
	:	

This is a decision on the Request to Withdraw as attorney or agent of record under 37 C.F.R. § 1.36(b), filed August 9, 2005.

The request is **NOT APPROVED** as moot.

A review of the file record indicates that the power of attorney to Jonathan M. Waldman has been revoked by the assignee of the patent application. Accordingly, the request to withdraw under 37 C.F.R. § 1.36(b) is moot.

There is an outstanding Office action mailed March 29, 2006 that requires a reply from the applicant.

All future communications from the Office will continue to be directed to the below-listed address until otherwise notified by applicant.

Telephone inquires concerning this decision should be directed to Irvin Dingle at 571-272-3210.

Denise Pothier
Petitions Examiner
Office of Petitions

cc: Cantor Colburn LLP – Bellsouth
55 Griffin Road South
Bloomfield, CT 06002