UNITED STATES PATENT AND TRADEMARK OFFICE

Commissioner for Patents
United States Patent and Trademark Office
P.O. Box 1450
Alexandria, VA 22313-1450
www.uspto.gov

FINNEGAN, HENDERSON, FARABOW,
GARRETT & DUNNER, LLP
901 NEW YORK AVENUE, NW
WASHINGTON, DC 20001-4413

COPY MAILED

MAR 17 2008

OFFICE OF PETITIONS

In re Application of	:	
Sebastian Suerbaum, et al.	:	
Application No. 10/926,270	:	DECISION ON PETITION
Filed: August 26, 2004	:	TO WITHDRAW
Attorney Docket No. 02356.0073-03	:	FROM RECORD
	:	

This is a decision on the Request to Withdraw as attorney or agent of record under 37 C.F.R. § 1.36(b) filed September 21, 2007 and September 24, 2007.

The request is **APPROVED**.

A grantable request to withdraw as attorney/agent of record must be signed by every attorney/agent seeking to withdraw or contain a clear indication that one attorney is signing on behalf of another/others. A request to withdraw will not be approved unless at least 30 (thirty) days would remain between the date of approval and the later of the expiration date of a time to file a response or the expiration date of the maximum time period which can be extended under 37 C.F.R. § 1.136(a).

The request was signed by Deborah Katz on behalf of herself.

All other attorney/agents remain of record.

The correspondence address of record remains unchanged.

There is an outstanding Office action mailed November 1, 2007 that requires a reply from the applicant.

Telephone inquiries concerning this decision should be directed to undersigned at 571-272-1642.

April M. Wise
Petitions Examiner
Office of Petitions

UNITED STATES PATENT AND TRADEMARK OFFICE

Commissioner for Patents
United States Patent and Trademark Office
P.O. Box 1450
Alexandria, VA 22313-1450
www.uspto.gov

MAILED
FROM DIRECTORS OFFICE

JAN 21 2005

TECHNOLOGY CENTER 3600

NELSON MULLINS RILEY & SCARBOROUGH LLP
P.O. Box 11070
Columbia, SC 29211

In re application of
Roy E. Kirkland et al
Application No. 10/926,278
Filed: August 25, 2004
For: PLANT STAKE HAVING ADJUSTABLE SUPPORT MEMBERS

DECISION ON PETITION TO MAKE SPECIAL (APPLICANT'S AGE)

This is a decision on the petition submitted on December 23, 2004, under 37 CFR 1.102 (c) to make the above-identified application special under the accelerated examination procedure set forth in MPEP 708.02, Section IV: Applicant's Age.

The petition is **GRANTED**.

An application may be accorded special status upon the filing of a petition providing evidence showing that the applicant is at least 65 years old. Such a showing may be provided by evidence such as a birth certificate or a statement from the applicant.

The evidence submitted with the petition is a declaration signed by Mr. Kirkland, Sr. indicating that he is at least 65 years of age.

The examiner is directed (1) to make an interference search for possible interfering applications, (2) to promptly examine this application out of turn, and (3) if any interfering application is discovered, to examine such application simultaneously and state in the first official letter of such application that it is being taken out of turn because of a possible interference.

Petitioner is advised that this application will continue to be special, throughout its entire prosecution and pendency, including interference or appeal, if any, only if petitioner makes a prompt ***bona fide*** effort, in response to each Office action, to place the application in condition for allowance, even if it is necessary to conduct an interview with the examiner to accomplish this purpose.

SUMMARY: Petition to Make Special **GRANTED**.

Steven N. Meyers
Special Programs Examiner
Patent Technology Center 3600
(703) 308-3868

SNM/pav: 01/10/05

UNITED STATES PATENT AND TRADEMARK OFFICE

Commissioner for Patents
United States Patent and Trademark Office
P.O. Box 1450
Alexandria, VA 22313-1450
www.uspto.gov

SCHWEGMAN, LUNDBERG & WOESSNER / ATMEL
P.O. BOX 2938
MINNEAPOLIS, MN 55402

MAILED

OCT 22 2009

OFFICE OF PETITIONS

In re Application of	:
Emil Lambrache, et al.	:
Application No. 11/926,296	: DECISION ON PETITION
Filed: October 29, 2007	: UNDER 37 CFR 1.78(a)(3)
Attorney Docket No. 2800.009US5	:

This is a decision on the renewed petition under 37 CFR 1.78(a)(3), filed August 24, 2009, to accept an unintentionally delayed claim under 35 U.S.C. § 120 for the benefit of priority to the prior-filed non-provisional applications set forth in the amendment filed with the petition.

The petition is **DISMISSED**.

A petition for acceptance of a claim for late priority under 37 CFR 1.78(a)(3) is only applicable to those applications filed on or after November 29, 2000. Further, the petition is appropriate only after the expiration of the period specified in 37 CFR 1.78(a)(2)(ii). In addition, the petition under 37 CFR 1.78(a)(3) must be accompanied by:

(1) the reference required by 35 U.S.C. § 120 and 37 CFR 1.78(a)(2)(i) of the prior-filed application, unless previously submitted;
(2) the surcharge set forth in § 1.17(t); and
(3) a statement that the entire delay between the date the claim was due under 37 CFR 1.78(a)(2)(ii) and the date the claim was filed was unintentional. The Director may require additional information where there is a question whether the delay was unintentional.

The petition does not satisfy item (1) above.

The amendment filed on petition filed August 24, 2009 is improper as it should read "which claims benefit of Provisional Application No. 60/658,473 filed March 5, 2005". The new amendment filed does not indicate that 11/738,173 claims benefit back to 60/658,473.

If reconsideration of this decision is desired, a renewed petition under 37 CFR § 1.78(a)(3) and an Application Data Sheet or an amendment (complying with the provisions of 37 CFR 1.121 and 37 CFR 1.76(b)(5)) to correct the above matters are required.

A Certificate of Correction to accept a late claim for the benefit of priority to a prior filed non-provisional application after issuance of the application into a patent and to help satisfy the requirements of 37 CFR 1.78(a)(2)(i) along with a renewed petition under 37 CFR 1.78(a)(3).

Further correspondence with respect to this matter should be addressed as follows:

By mail: Mail Stop PETITIONS
Commissioner for Patents
Post Office Box 1450
Alexandria, VA 22313-1450

By hand: Customer Service Window
Mail Stop Petitions
Randolph Building
401 Dulany Street
Alexandria, VA 22314

By fax: (571) 273-8300
ATTN: Office of Petitions

Any questions concerning this matter may be directed to April M. Wise at (571) 272-1642. All other inquiries concerning the examination or status of this application should be directed to the Technology Center.

/dab/
David Bucci
Petitions Examiner
Office of Petitions

UNITED STATES PATENT AND TRADEMARK OFFICE

Commissioner for Patents
United States Patent and Trademark Office
P.O. Box 1450
Alexandria, VA 22313-1450
www.uspto.gov

RADER FISHMAN & GRAUER
LION BUILDING
1233 20TH STREET N.W., SUITE 501
WASHINGTON DC 20036

COPY MAILED
AUG 1 8 2006
OFFICE OF PETITIONS

In re Application of	:	
Masaki Tamura et al	:	
Application No. 10/926,316	:	ON PETITION
Filed: August 26, 2004	:	
Attorney Docket No. SON-3085	:	

This is a decision on the petition, filed August 17, 2006, under 37 CFR 1.313(c)(2) to withdraw the above-identified application from issue after payment of the issue fee.

The petition is **GRANTED**.

The above-identified application is withdrawn from issue for consideration of a submission under 37 CFR 1.114 (request for continued examination). See 37 CFR 1.313(c)(2).

Petitioner is advised that the issue fee paid on July 19, 2006, in the above-identified application cannot be refunded. If, however, the above-identified application is again allowed, petitioner may request that it be applied towards the issue fee required by the new Notice of Allowance.[1]

Telephone inquiries should be directed to the undersigned at (571) 272-3208.

The examiner of Technology Center AU 2873 will consider the request for continued examination under 37 CFR 1.114.

Karen Creasy
Petitions Examiner
Office of Petitions

---

[1] The request to apply the issue fee to the new Notice may be satisfied by completing and returning the new Issue Fee Transmittal Form PTOL-85(b), which includes the following language thereon: "Commissioner for Patents is requested to apply the Issue Fee and Publication Fee (if any) or re-apply any previously paid issue fee to the application identified above." Petitioner is advised that, whether a fee is indicated as being due or not, the Issue Fee Transmittal Form **must** be completed and timely submitted to avoid abandonment. Note the language in bold text on the first page of the Notice of Allowance and Fee(s) Due (PTOL-85).

UNITED STATES PATENT AND TRADEMARK OFFICE

COMMISSIONER FOR PATENTS
UNITED STATES PATENT AND TRADEMARK OFFICE
P.O. BOX 1450
ALEXANDRIA, VA 22313-1450
www.uspto.gov

YOUNG & THOMPSON
745 SOUTH 23RD STREET
2ND FLOOR
ARLINGTON VA 22202

COPY MAILED

JUL 2 0 2005

OFFICE OF PETITIONS

In re Application of	:	
Nathalie Proust	:	
Application No. 10/926,325	:	DECISION ACCORDING STATUS
Filed: August 26, 2004	:	UNDER 37 CFR 1.47(b)
Attorney Docket No. 0513-1124	:	

This decision is in response to the petition filed January 28, 2005 under 37 CFR 1.47(b).

The petition is **GRANTED**.

The above-identified application was filed August 26, 2004 naming Nathalie Proust as the sole inventor but without an executed oath or declaration. On October 28, 2004, a Notice to File Missing Parts was mailed, requiring the basic filing fees, an oath or declaration under 37 CFR 1.63 and the surcharge set forth in 37 CFR 1.16(e). In response, on January 28, 2005, applicant submitted, *inter alia*, the requisite fees and the present petition seeking status under 37 CFR 1.47(b).

A grantable petition under 37 CFR 1.47(b) requires:

> (1) proof that the non-signing inventor cannot be reached or refuses to sign the oath or declaration after having been presented with the application papers specification, claims and drawings); (2) an acceptable oath or declaration in compliance with 35 U.S.C. " 115 and 116; (3) the petition fee; (4) a statement of the last known address of the non-signing inventor; (5) proof of proprietary interest, and (6) proof of irreparable damage.

Petitioner has shown that the non-signing inventor, Nathalie Proust, cannot be reached or located, after diligent effort, to sign the oath or declaration for this application. In addition, petitioner has shown, by declaration of Mr. Jean Pierre Robert, that Nobel Plastiques has a proprietary interest in the above-identified application. Petitioner has submitted the requisite petition fee and the last known address for Ms. Proust. Lastly, petitioner has submitted a declaration in compliance with 37 CFR 1.63 and 1.64 and has demonstrated that such action is necessary to prevent irreparable damage.

The application and papers have been reviewed and found in compliance with 37 CFR 1.47(b). This application is hereby accorded Rule 1.47(b) status.

As provided in Rule 1.47(b), this Office will forward notice of this application's filing to the non-signing inventor at the address given in the Declaration. Notice of the filing of this application will also be published in the Official Gazette.

After this decision is mailed, the above-identified application will be forwarded to the Office of Initial Patent Examination for issuance of a corrected filing receipt. Thereafter the application will be returned to Group Art Unit 3746 for further processing.

Telephone inquiries regarding this communication should be directed to the undersigned at (571) 272-3204.

Sherry D. Brinkley
Petitions Examiner
Office of Petitions
Office of the Deputy Assistant Commissioner
for Patent Policy and Projects

UNITED STATES PATENT AND TRADEMARK OFFICE

COMMISSIONER FOR PATENTS
UNITED STATES PATENT AND TRADEMARK OFFICE
P.O. BOX 1450
ALEXANDRIA, VA 22313-1450
www.uspto.gov

MS. NATHALIE PROUST
30, RUE DE SAINT BRICE
5100 REIMS, FRANCE

COPY MAILED

JUL 2 0 2005

OFFICE OF PETITIONS

In re Application of :
Nathalie Proust :
Application No. 10/926,325 :
Filed: August 26, 2004 :
For: A PRIMING PUMP FOR A CIRCUT :
SUBJECTING SAID PUMPT TO AN OUTLET
PRESSURE GREATER THAN AN INLET :
PRESSURE :

LETTER

Dear Ms. Proust:

You are named as the inventor in the above-identified United States patent application filed under the provisions of 35 U.S.C. 116 (United States Code) and 37 CFR 1.47(b), Rules of Practice in Patent Cases. Should a patent be granted on the application you will be designated therein as the inventor.

As the named inventor you are entitled to inspect any paper in the file wrapper of the application, order copies of all or any part thereof (at a prepaid cost per 37 CFR 1.19) or make your position of record in the application. Alternatively, you may arrange to do any of the preceding through a registered patent attorney or agent presenting written authorization from you. If you care to join the application, counsel of record (see below) would presumably assist you. Joining in the application would entail the filing of an appropriate oath or declaration by you pursuant to 37 CFR 1.63.

Telephone inquiries regarding this communication should be directed to the undersigned at (571) 272-3204. Requests for information regarding your application should be directed to the File Information Unit at (703) 308-2733. Information regarding how to pay for and order a copy of the application, or a specific paper in the application, should be directed to Certification Division at (703) 308-9726 or 1-800-972-6382 (outside the Washington D.C. area).

Sherry D. Brinkley
Petitions Examiner
Office of Petitions

cc: YOUNG & THOMPSON
745 SOUTH 23RD STREET
2ND FLOOR
ARLINGTON, VA 22202

UNITED STATES PATENT AND TRADEMARK OFFICE

Commissioner for Patents
United States Patent and Trademark Office
P.O. Box 1450
Alexandria, VA 22313-1450
www.uspto.gov

Paper No.

DARBY & DARBY P.C.
P.O. BOX 770
Church Street Station
New York NY 10008-0770

MAILED

JUN 22 2009

OFFICE OF PETITIONS

In re Patent No. 7,465,465	:	
Haslam et al.	:	DECISION ON
Issue Date: December 16, 2008	:	REQUEST FOR
Application No. 10/926,330	:	RECONSIDERATION OF
Filed: August 26, 2004	:	PATENT TERM ADJUSTMENT
Attorney Docket No. 20342/1202326	:	
-US2	:	

This is a decision on the "REQUEST FOR PATENT TERM ADJUSTMENT DETERMINATION UNDER 37 CFR 1.705(b)," filed February 13, 2009, requesting that the patent term adjustment determination for the above-identified patent be changed from zero (0) days to forty-four (44) days.

The request for reconsideration of patent term adjustment is **DISMISSED**.

On December 16, 2008, the above-identified application matured into US Patent No. 7,465,465 with a patent term adjustment of 0 days. This request for reconsideration of patent term adjustment was timely filed within two months of the issue date of the patent. See 37 C.F.R. § 1.705(d).

The $200.00 fee set forth in 37 CFR 1.18(e) was preveniently submitted with the filing of November 18, 2008. No additional fees are required.

Patentees request recalculation of the patent term adjustment to include a 283-day period of adjustment pursuant to 37 C.F.R. § 1.703(b). This request for an adjustment of 283 days is a miscalculation. This application was filed under 35 U.S.C.

§ 111(a) on August 26, 2004, and a request for continued examination (RCE) having been filed in this application on June 5, 2008, three years and 284 days later.[1] It follows that *this petition will be construed to contain an assertion of entitlement to an adjustment for 284 days for the Office's failure to issue this patent in 3 years*, along with a period of adjustment due to other examination delays, pursuant to 37 CFR §§ 1.702(a)(1) and (a)(2), of 136 (92 + 44) days.

Under 37 CFR § 1.703(f), Patentees are entitled to a period of patent term adjustment equal to the period of delays based on the grounds set forth in 37 CFR § 1.702 reduced by the period of time equal to the period of time during which Patentees failed to engage in reasonable efforts to conclude prosecution pursuant to 37 CFR § 1.704. In other words, the period of Office delay reduced by the period of applicant delay.

The period of reduction of 359 days for applicant delay is not in dispute.

Patentees do not dispute that the total period of Office delay is the sum of the period of Three Years Delay (284 days) and the period of Examination Delay (136 days) to the extent that these periods of delay are not overlapping. However, Patentees contend that only 16 days of the Three Year Delay period overlaps with the period of examination delay prior to the filing of the RCE. Accordingly, *this petition is being construed as containing an assertion by Patentees that the total period of adjustment for Office delay is 404 days, which is the sum of the period of Three Year Delay (284 days) and the period of Examination Delay (136 days), reduced by the period of overlap (16 days)*.

It follows that *this petition is being construed as containing an assertion that Patentees are entitled to a patent term adjustment of 45 days (284 + 136 reduced by 16 overlap - 359 (applicant delay)*.

The Office agrees that as of the filing of the RCE on June 5, 2008, the application was pending 3 years and 284 days after its

---

[1] Pursuant to 37 C.F.R. § 1.702(b)(5), the term of a patent shall be adjusted if the issuance of the patent was delayed due to the failure of the Office to issue a patent within three years after the date on which the application was filed, but not including "[a]ny delay in the processing of the application by the Office that was requested by the applicant."

filing date. The Office agrees that the actions detailed above were not taken within the specified time frame, and thus, the entry of a period of adjustment of 136 days is correct. At issue is whether Patentees should accrue 284 days of patent term adjustment for the Office taking in excess of three years to issue the patent, as well as 136 days for Office failure to take certain actions within a specified time frame (or examination delay).

The Office contends that the entire 284-day period overlaps. Patentees' calculation of the period of overlap is inconsistent with the Office's interpretation of this provision. 35 U.S.C. 154(b)(2)(A) limits the adjustment of patent term, as follows:

> to the extent that the periods of delay attributable to grounds specified in paragraph (1) overlap, the period of any adjustment granted under this subsection shall not exceed the actual number of days the issuance of the patent was delayed.

Likewise, 37 CFR 1.703(f) provides that:

> To the extent that periods of delay attributable to the grounds specified in §1.702 overlap, the period of adjustment granted under this section shall not exceed the actual number of days the issuance of the patent was delayed.

As explained in *Explanation of 37 CFR 1.703(f) and of the United States Patent and Trademark Office Interpretation of 35 U.S.C. 154(b)(2)(A)*, 69 Fed. Reg. 34283 (June 21, 2004), the Office interprets 35 U.S.C. 154(b)(2)(A) as permitting either patent term adjustment under 35 U.S.C. 154(b)(1)(A)(i)-(iv), or patent term adjustment under 35 U.S.C. 154(b)(1)(B), but not as permitting patent term adjustment under both 35 U.S.C. 154(b)(1)(A)(i)-(iv) and 154(b)(1)(B). Accordingly, the Office implements the overlap provision as follows:

> If an application is entitled to an adjustment under 35 U.S.C. 154(b)(1)(B), the entire period during which the application was pending (except for periods excluded under 35 U.S.C. 154(b)(1)(B)(i)-(iii)), and not just the period beginning three years after the actual filing date of the application, is the period of delay under 35 U.S.C. 154(b)(1)(B) in determining whether periods of delay

> overlap under 35 U.S.C. 154(b)(2)(A). Thus, any days of delay for Office issuance of the patent more than 3 years after the filing date of the application, which overlap with the days of patent term adjustment accorded prior to the issuance of the patent will not result in any additional patent term adjustment. See 35 U.S.C. 154(b)(1)(B), 35 U.S.C. 154(b)(2)(A), and 37 CFR § 1.703(f). See *Changes to Implement Patent Term Adjustment Under Twenty Year Term; Final Rule*, 65 Fed. Reg. 54366 (Sept. 18, 2000). See also *Revision of Patent Term Extension and Patent Term Adjustment Provisions; Final Rule*, 69 Fed. Reg. 21704 (April 22, 2004), 1282 Off. Gaz. Pat. Office 100 (May 18, 2004). See also *Explanation of 37 CFR 1.703(f) and of the United States Patent and Trademark Office Interpretation of 35 U.S.C. 154(b)(2)(A)*, 69 Fed. Reg. 34283 (June 21, 2004).

The current wording of § 1.703(f) was revised in response to the misinterpretation of this provision by a number of Patentees. The rule was slightly revised to more closely track the corresponding language of 35 U.S.C. 154(b)(2)(A). The relevant portion differs only to the extent that the statute refers back to provisions of the statute whereas the rule refers back to sections of the rule. This was not a substantive change to the rule nor did it reflect a change of the Office's interpretation of 35 U.S.C. 154(b)(2)(A). As stated in the *Explanation of 37 CFR 1.703(f) and of the United States Patent and Trademark Office Interpretation of 35 U.S.C. 154(b)(2)(A)*, the Office has consistently taken the position that if an application is entitled to an adjustment under the three-year pendency provision of 35 U.S.C. 154(b)(1)(B), the entire period during which the application was pending before the Office (except for periods excluded under 35 U.S.C. 154(b)(1)(B)(i)-(iii)), and not just the period beginning three years after the actual filing date of the application, is the relevant period under 35 U.S.C. 154(b)(1)(B) in determining whether periods of delay "overlap" under 35 U.S.C. 154(b)(2)(A).

This interpretation is consistent with the statute. Taken together the statute and rule provide that to the extent that periods of delay attributable to grounds specified in 35 U.S.C. 154(b)(1) and in corresponding §1.702 overlap, the period of adjustment granted shall not exceed the actual number of days the issuance of the patent was delayed. The grounds specified in these sections cover the A) guarantee of prompt Patent and

Trademark Office responses, B) guarantee of no more than 3 year application pendency, and C) guarantee or adjustments for delays due to interference, secrecy orders and appeals. A section by section analysis of 35 U.S.C. 154(b)(2)(A) specifically provides that:

> Section 4402 imposes limitations on restoration of term. In general, pursuant to [35 U.S.C.] 154(b)(2)(A)-(C), total adjustments granted for restorations under [35 U.S.C. 154](b)(1) are reduced as follows: (1) To the extent that there are multiple grounds for extending the term of a patent that may exist simultaneously (e.g., delay due to a secrecy order under [35 U.S.C.] 181 and administrative delay under [35 U.S.C.] 154(b)(1)(A)), the term should not be extended for each ground of delay but only for the actual number of days that the issuance of a patent was delayed; See 145 Cong. Rec. S14,718[2]

As such, the period for over 3 year pendency does not overlap only to the extent that the actual dates in the period beginning three years after the date on which the application was filed overlap with the actual dates in the periods for failure of the Office to take action within specified time frames. In other words, consideration of the overlap does not begin three years after the filing date of the application.

In this instance, the relevant period under 35 U.S.C. 154(b)(1)(B) in determining whether periods of delay "overlap" under 35 U.S.C. 154(b)(2)(A) is the entire period during which the application was pending before the Office, August 26, 2004, until the filing of the RCE on June 5, 2008. 136 days of patent term adjustment were accorded prior to the issuance of the patent for the Office failing to respond within a specified time frame during the pendency of the application. All of the 284 days for Office delay in issuing the patent overlap with the adjustment of 136 days attributable to grounds specified in §§ 1.702(a)(1) and (a)(2). 284 days is determined to be the actual number of days that the issuance of the patent was delayed, considering the 284 days over three years to the filing of the RCE.

---

[2] The AIPA is title IV of the Intellectual Property and Communications Omnibus Reform Act of 1999 (S. 1948), which was incorporated and enacted as law as part of Pub. L. 106-113. The Conference Report for H.R. 3194, 106th Cong. 1st Sess. (1999), which resulted in Pub. L. 106-113, does not contain any discussion (other than the incorporated language) of S. 1948. A section-by-section analysis of S. 1948, however, was printed in the Congressional Record at the request of Senator Lott, See 145 Cong. Rec. S14,708-26 (1999)(daily ed. Nov. 17, 1999).

Accordingly, at issuance, the Office properly entered 148 additional days of patent term adjustment for the Office taking in excess of 3 years to issue the patent for a total Office delay of (148 + 136) 284 days.

In view thereof, no adjustment to the patent term will be made.

Telephone inquiries specific to this matter should be directed to Paul Shanoski, Senior Attorney, at (571) 272-3225.

Nancy Johnson
Senior Petitions Attorney
Office of Petitions

STATUTE AND REGULATION

35 U.S.C. § 154(b) as amended by § 4402 of the American Inventors Protection Act of 1999[4] (AIPA) provides that:

> ADJUSTMENT OF PATENT TERM. –
>
> (1) PATENT TERM GUARANTEES. –
>
> (A) GUARANTEE OF PROMPT PATENT AND TRADEMARK OFFICE RESPONSES. – Subject to the limitations under paragraph (2), if the issue of an original patent is delayed due to the failure of the Patent and Trademark Office to –
>
> (i) provide at least one of the notifications under section 132 of this title or a notice of allowance under section 151 of this title not later than 14 months after –
>
> (I) the date on which an application was filed under section 111(a) of this title; or
>
> (II) the date on which an international application fulfilled the requirements of section 371 of this title;
>
> (ii) respond to a reply under section 132, or to an appeal taken under section 134, within 4 months after the date on which the reply was filed or the appeal was taken;
>
> (iii) act on an application within 4 months after the date of a decision by the Board of Patent Appeals and Interferences under section 134 or 135 or a decision by a Federal court under section 141, 145, or 146 in a case in which allowable claims remain in the application; or
>
> (iv) issue a patent within 4 months after the date on which the issue fee was paid under section 151 and all outstanding requirements were satisfied, the term of the patent shall be extended 1 day for each day after the end of the period specified in clause (i), (ii), (iii), or (iv), as the case may be, until the action described in such clause is taken.
>
> (B) GUARANTEE OF NO MORE THAN 3-YEAR APPLICATION PENDENCY. – Subject to the limitations under paragraph (2), if the issue of an original patent is delayed due to the failure of the United States Patent and Trademark Office to issue a patent within 3 years after the actual filing date of the application in the United States, not including –

[4] Public Law 106-113, 113 Stat. 1501, 1501A-557 through 1501A-560 (1999).

(i) any time consumed by continued examination of the application requested by the applicant under section 132(b);

(ii) any time consumed by a proceeding under section 135(a), any time consumed by the imposition of an order under section 181, or any time consumed by appellate review by the Board of Patent Appeals and Interferences or by a Federal court; or

(iii) any delay in the processing of the application by the United States Patent and Trademark Office requested by the applicant except as permitted by paragraph (3)(C), the term of the patent shall be extended 1 day for each day after the end of that 3-year period until the patent is issued.

(C) GUARANTEE OR ADJUSTMENTS FOR DELAYS DUE TO INTERFERENCES, SECRECY ORDERS, AND APPEALS. — Subject to the limitations under paragraph (2), if the issue of an original patent is delayed due to —

(i) a proceeding under section 135(a);

(ii) the imposition of an order under section 181; or

(iii) appellate review by the Board of Patent Appeals and Interferences or by a Federal court in a case in which the patent was issued under a decision in the review reversing an adverse determination of patentability, the term of the patent shall be extended 1 day for each day of the pendency of the proceeding, order, or review, as the case may be.

(2) LIMITATIONS. —

(A) IN GENERAL. — To the extent that periods of delay attributable to grounds specified in paragraph (1) overlap, the period of any adjustment granted under this subsection shall not exceed the actual number of days the issuance of the patent was delayed.

The implementing regulation, 37 CFR § 1.702, provides grounds for adjustment of patent term due to examination delay under the Patent Term Guarantee Act of 1999 (original applications, other than designs, filed on or after May 29, 2000).

(a) Failure to take certain actions within specified time frames. Subject to the provisions of 35 U.S.C. 154(b) and this subpart, the term of an original patent shall be

adjusted if the issuance of the patent was delayed due to the failure of the Office to:

(1) Mail at least one of a notification under 35 U.S.C. 132 or a notice of allowance under 35 U.S.C. 151 not later than fourteen months after the date on which the application was filed under 35 U.S.C. 111(a) or fulfilled the requirements of 35 U.S.C. 371 in an international application;

(2) Respond to a reply under 35 U.S.C. 132 or to an appeal taken under 35 U.S.C. 134 not later than four months after the date on which the reply was filed or the appeal was taken;

(b) Failure to issue a patent within three years of the actual filing date of the application. Subject to the provisions of 35 U.S.C. 154(b) and this subpart, the term of an original patent shall be adjusted if the issuance of the patent was delayed due to the failure of the Office to issue a patent within three years after the date on which the application was filed under 35 U.S.C. 111(a) or the national stage commenced under 35 U.S.C. 371(b) or (f) in an international application, but not including[5]:

In pertinent part, 37 CFR § 1.703 provides for calculation of the periods, as follows:

Period of adjustment of patent term due to examination delay.

(a) The period of adjustment under § 1.702(a) is the sum of the following periods:

(1) The number of days, if any, in the period beginning on the day after the date that is fourteen months after the date on which the application was filed under 35 U.S.C. 111(a) or fulfilled the requirements of 35 U.S.C. 371 and ending on the date of mailing of either an action under 35 U.S.C. 132, or a notice of allowance under 35 U.S.C. 151, whichever occurs first;

(b) The period of adjustment under § 1.702(b) is the number of days, if any, in the period beginning on the day

---

[5] (1) Any time consumed by continued examination of the application under 35 U.S.C. 132(b);

(2) Any time consumed by an interference proceeding under 35 U.S.C. 135(a);

(3) Any time consumed by the imposition of a secrecy order under 35 U.S.C. 181;

(4) Any time consumed by review by the Board of Patent Appeals and Interferences or a Federal court; or

(5) Any delay in the processing of the application by the Office that was requested by the applicant.

> after the date that is three years after the date on which the application was filed under 35 U.S.C. 111(a) or the national stage commenced under 35 U.S.C. 371(b) or (f) in an international application and ending on the date a patent was issued, but not including the sum of the following periods[6]:

37 CFR 1.703(f) provides that:

> The adjustment will run from the expiration date of the patent as set forth in 35 U.S.C. 154(a)(2). To the extent that periods of delay attributable to the grounds specified in §1.702 overlap, the period of adjustment granted under this section shall not exceed the actual number of days the issuance of the patent was delayed. The term of a patent entitled to adjustment under § 1.702 and this section shall be adjusted for the sum of the periods calculated under paragraphs (a) through (e) of this section, to the extent that such periods are not overlapping, less the sum of the periods calculated under § 1.704. The date indicated on any certificate of mailing or transmission under § 1.8 shall not be taken into account in this calculation.

---

[6] (1) The number of days, if any, in the period beginning on the date on which a request for continued examination of the application under 35 U.S.C. 132(b) was filed and ending on the date the patent was issued;

(2)(i) The number of days, if any, in the period beginning on the date an interference was declared or redeclared to involve the application in the interference and ending on the date that the interference was terminated with respect to the application; and (ii) The number of days, if any, in the period beginning on the date prosecution in the application was suspended by the Office due to interference proceedings under 35 U.S.C. 135(a) not involving the application and ending on the date of the termination of the suspension;

(3)(i) The number of days, if any, the application was maintained in a sealed condition under 35 U.S.C. 181; (ii) The number of days, if any, in the period beginning on the date of mailing of an examiner's answer under § 41.39 of this title in the application under secrecy order and ending on the date the secrecy order was removed; (iii) The number of days, if any, in the period beginning on the date applicant was notified that an interference would be declared but for the secrecy order and ending on the date the secrecy order was removed; and (iv) The number of days, if any, in the period beginning on the date of notification under § 5.3(c) of this chapter and ending on the date of mailing of the notice of allowance under 35 U.S.C. 151; and,

(4) The number of days, if any, in the period beginning on the date on which a notice of appeal to the Board of Patent Appeals and Interferences was filed under 35 U.S.C. 134 and § 41.31 of this title and ending on the date of the last decision by the Board of Patent Appeals and Interferences or by a Federal court in an appeal under 35 U.S.C. 141 or a civil action under 35 U.S.C. 145, or on the date of mailing of either an action under 35 U.S.C. 132, or a notice of allowance under 35 U.S.C. 151, whichever occurs first, if the appeal did not result in a decision by the Board of Patent Appeals and Interferences.

UNITED STATES PATENT AND TRADEMARK OFFICE

Commissioner for Patents
United States Patent and Trademark Office
P.O. Box 1450
Alexandria, VA 22313-1450
www.uspto.gov

OCT 11 2005

RICHARD C. LITMAN
LITMAN LAW OFFICES, LTD.
P.O. BOX 15035
ARLINGTON, VA 22215

In re application of Ivan L. Loesch Application No. 10/926,349 Filed: August 26, 2004 For: UNFOLDING MODULAR BUILDING SYSTEM	: : : :	**DECISION ON PETITION TO MAKE SPECIAL (APPLICANT'S AGE)**

This is a decision on the petition submitted on August 26, 2004 under 37 CFR 1.102 (c) to make the above-identified application special under the accelerated examination procedure set forth in MPEP 708.02, Section IV: Applicant's Age.

The petition is **GRANTED**.

An application may be accorded special status upon the filing of a petition providing evidence showing that the applicant is at least 65 years old. Such a showing may be provided by evidence such as a birth certificate or a statement from the applicant.

The evidence submitted with the petition is a declaration signed by Ivan L. Loesch indicating that he is at least 65 years of age.

The examiner is directed (1) to make an interference search for possible interfering applications, (2) to promptly examine this application out of turn, and (3) if any interfering application is discovered, to examine such application simultaneously and state in the first official letter of such application that it is being taken out of turn because of a possible interference.

Petitioner is advised that this application will continue to be special, throughout its entire prosecution and pendency, including interference or appeal, if any, only if petitioner makes a prompt ***bona fide*** effort, in response to each Office action, to place the application in condition for allowance, even if it is necessary to conduct an interview with the examiner to accomplish this purpose.

SUMMARY: Petition to Make Special **GRANTED**.

Randolph A. Reese
Special Programs Examiner
Technology Center 3600
(571) 272-6619

RAR/dcg: 10/7/05

UNITED STATES PATENT AND TRADEMARK OFFICE

UNITED STATES DEPARTMENT OF COMMERCE
United States Patent and Trademark Office
Address: COMMISSIONER FOR PATENTS
P.O. Box 1450
Alexandria, Virginia 22313-1450
www.uspto.gov

Workman Nydegger
1000 Eagle Gate Tower
60 East South Temple
Salt Lake City, UT 84111

Mail Date: 04/21/2010

Applicant	: Sara Haber	: DECISION ON REQUEST FOR
Patent Number	: 7564798	: RECALCULATION of PATENT
Issue Date	: 07/21/2009	: TERM ADJUSTMENT IN VIEW
Appliction No	: 10/926,422	: OF WYETH
Filed	: 08/25/2004	:
		:

The Patentee's Request for Recalculation is **DISMISSED.**

This Request is deemed ineligible for consideration for one or more of the following reasons:

(A). The patent for which PTA recalculation is requested is either a design or reissue application or is a reexamination proceeding;

(B). The patent for which PTA recalculation is requested resulted from a utility or plant application filed under 35 USC 111(a) before May 29, 2000 and no CPA filed in the application on/after May 29, 2000;

(C). The patent for which PTA recalculation is requested resulted from an international application in which the international filing date was before May 29, 2000 and no CPA filed in the application on/after May 29, 2000;

(D). The patent for which PTA recalculation is requested issued on/after March 2, 2010;

(E). The Request for Recalculation was filed more than 180 days after the grant date of the patent and the request was not filed within two months of a dismissal of a request for reconsideration of the of the patent term under 37 CFR 1.705(d);

(F). The Request for Recalculation is not solely limited to USPTO pre-Wyeth interpretation of 35 U.S.C. 154(b)(2)(A);

or

(G). A civil action was filed pursuant to 35 U.S.C. 154(b)(4)(A)concerning the same patent at issue in this request.

Patentee may file a reply to this decision dismissing the Request for Recalculation. Patentee must file such reply within one month or thirty days, whichever is longer, of the mail date of the decision dismissing the Request for Recalculation. No fee is required if patentee is asserting in the reply that the dismissal for ineligibility is improper.

Patentee should use document code PET.OP if electronically filing a reply to this dismissal. If the USPTO finds that the request was improperly deemed ineligible, the USPTO will mail applicant a recalculation determination.

Patentee should be aware that in order to preserve the right to review in the United States District Court for the District of Columbia of the USPTO patent term adjustment determination, patentee must ensure that he or she also take the steps required under 35 U.S.C. 154(b)(4)(A). Nothing in the request for recalculation should be construed as providing an alternative time frame for commencing a civil action under 35 U.S.C. 154 (b)(4)(A).

Any questions concerning this decision should be directed to the Office of Patent Legal Administration at 571-272-7702.

UNITED STATES PATENT AND TRADEMARK OFFICE

Commissioner for Patents
United States Patent and Trademark Office
P.O. Box 1450
Alexandria, VA 22313-1450
www.uspto.gov

COPY MAILED

AUG 16 2006

OFFICE OF PETITIONS

BLAKELY SOKOLOFF TAYLOR & ZAFMAN
12400 WILSHIRE BOULEVARD
SEVENTH FLOOR
LOS ANGELES CA 90025-1030

In re Application of

Alvin H. BURGEMEISTER
Application No. 10/926,436
Filed: August 24, 2004
Attorney Docket No. 7085.P001

DECISION ON PETITION
TO WITHDRAW
FROM RECORD

This is a decision on the Request to Withdraw as attorney or agent of record under 37 C.F.R. § 1.36(b), filed April 21, 2006.

The request is **APPROVED**.

A grantable request to withdraw as attorney/agent of record must be signed by every attorney/agent seeking to withdraw or contain a clear indication that one attorney is signing on behalf of another/others. A request to withdraw will not be approved unless at least 30 (thirty) days would remain between the date of approval and the later of the expiration date of a time to file a response or the expiration date of the maximum time period which can be extended under 37 C.F.R. § 1.136(a).

The request was signed by James Go on behalf of all attorneys of record who are associated with customer No. 08791.

All attorneys/agents associated with the Customer Number 08791 have been withdrawn.

Applicant is reminded that there is no attorney of record at this time.

The request to change the correspondence of record is not acceptable as the requested correspondence address is not that of: (1) the first named signing inventor; or (2) an intervening assignee of the entire interest under 37 C.F.R 3.71. All future communications from the Office will be directed to the sole named signing inventor at the first copied address below until otherwise properly notified by the applicant.

There is an outstanding Office action mailed March 27, 2006 that requires a reply from the applicant.

Telephone inquiries concerning this decision should be directed to Monica A.Graves at 571-272-7253.

Amelia Au
Petitions Examiner
Office of Petitions

cc: Alvin H. Burgemeister
17507 SE 293rd Place
Kent, WA 98042-9462

cc: Law Office of R. Alan Burnett, PS
4104 131st Avneue SE
Bellevue, WA 98006

UNITED STATES PATENT AND TRADEMARK OFFICE

Commissioner for Patents
United States Patent and Trademark Office
P.O. Box 1450
Alexandria, VA 22313-1450
www.uspto.gov

APR 2 4 2009

KATTEN MUCHIN ROSENMAN LLP
575 MADISON AVENUE
NEW YORK NY 10022-2585

In re Application of	:	
Eizou Ishizu et al	:	
Application No: 10/926,444	:	NOTICE OF WITHDRAWAL
Filed: August 25, 2004	:	FROM ISSUE
Title: Method for Forming a Beam of an Array	:	
Antenna and Apparatus Therefor	:	

The above-identified application is withdrawn from issue after payment of the issue fee due to unpatentability of one or more claims. See 37 CFR 1.313(b)(3).

The above-identified application is hereby withdrawn from issue.

The issue fee is refundable upon written request. If, however, the application is again found allowable, the issue fee can be applied toward payment of the issue fee in the amount identified on the new Notice of Allowance and Issue Fee Due upon written request. This request and any balance due must be received on or before the due date noted in the new Notice of Allowance in order to prevent abandonment of the application.

Telephone inquiries should be directed to Thomas Tarcza at (571)272-6979.

The above-identified application is being forwarded to the examiner for prompt appropriate action, including notifying applicant of the new status of this application.

Kathy Matecki

Kathy Matecki, Director
Technology Center 3600

cal

UNITED STATES PATENT AND TRADEMARK OFFICE

UNITED STATES DEPARTMENT OF COMMERCE
United States Patent and Trademark Office
Address: COMMISSIONER FOR PATENTS
P.O. Box 1450
Alexandria, Virginia 22313-1450
www.uspto.gov

MUSKIN & CUSICK LLC
100 West Main Street
SUITE 205
Lansdale, PA 19446

Mail Date: 04/20/2010

Applicant	: Jon H. Muskin	: DECISION ON REQUEST FOR
Patent Number	: 7666080	: RECALCULATION of PATENT
Issue Date	: 02/23/2010	: TERM ADJUSTMENT IN VIEW
Appliction No	: 10/926,456	: OF WYETH AND NOTICE OF INTENT TO
Filed	: 08/26/2004	: ISSUE CERTIFICATE OF CORRECTION
		:

The Request for Recalculation is **GRANTED** to the extent indicated.

The patent term adjustment has been determined to be **16** days. The USPTO will *sua sponte* issue a certificate of correction reflecting the amount of PTA days determined by the recalculation.

Prior to the issuance of the certificate of correction, the USPTO will afford patentee an opportunity to be heard and request reconsideration. Accordingly, patentee has **one month or thirty (30) days**, whichever is longer, to file a request for reconsideration of this patent term adjustment calculation. See 35 U.S.C. 154(b)(3)(B)(ii) and 37 CFR 1.322(a)(4). No extensions of time will be granted under 37 CFR 1.136.

Patentee should use document code PET.OP if electronically filing a request for reconsideration of this patent term adjustment calculation. The patentee must also include the information required by 37 CFR 1.705(b)(2) and the fee required by 37 CFR 1.18(e). If patentee does not file a timely request for reconsideration of this patent term adjustment calculation including the information required by 37 CFR 1.705(b)(2) and the fee required by 37 CFR 1.18(e), the USPTO will issue a certificate of correction reflecting the PTA determination noted above.

Patentee should be aware that in order to preserve the right to review in the United States District Court for the District of Columbia of the USPTO patent term adjustment determination, patentee must ensure that he or she also take the steps required under 35 U.S.C. 154(b)(4)(A) in a timely manner. Nothing in the request for recalculation should be construed as providing an alternative time frame for commencing a civil action under 35 U.S.C. 154(b)(4)(A).

Any questions concerning this decision should be directed to the Office of Patent Legal Administration at 571-272-7702.

UNITED STATES PATENT AND TRADEMARK OFFICE

Commissioner for Patents
United States Patent and Trademark Office
P.O. Box 1450
Alexandria, VA 22313-1450
www.uspto.gov

James V. Tura
31850 S. Woodland
Pepper Pike OH 44124

COPY MAILED
MAR 11 2010

In re Application of :
Maryann B. Meador et al. :
Application No. 10/926,457 :
Filed: August 26, 2004 :
Attorney Docket No. LEW-17, 592-1 :

DECISION ON PETITION

This is a decision on the petition, under 37 CFR 1.137(b) filed on December 22, 2009, to revive the above-identified application.

The petition is **GRANTED**.

This application became abandoned for failure to timely pay the issue and publication fees on or before November 20, 2009, as required by the Notice of Allowance and Fee(s) Due and the Notice of Allowability, mailed August 20, 2009. Accordingly, the date of abandonment of this application is November 21, 2009.

The petition satisfies the requirements of 37 CFR 1.137(b) in that petitioner has supplied (1) the reply in the form of payment of the issue fee of $ 1510 and the publication fee of $300, (2) the petition fee of $1620, and (3) a proper statement of unintentional delay. Accordingly, the issue fee and publication fee are accepted as having been unintentionally delayed.

It is not apparent whether the person signing the statement of unintentional delay was in a position to have firsthand knowledge of the facts and circumstances of the delay at issue. Nevertheless, such statement is being treated as having been made as the result of a reasonable inquiry into the facts and circumstances of such delay. See 37 CFR 10.18(b) and Changes to Patent Practice and Procedure; Final rule Notice, 62 Fed. Reg. 53131, 53178 (October 10, 1997), 1203 Off. Gaz. Pat. Office 63, 103 (October 21, 1997). In the event that such an inquiry has not been made, petitioner must make such an inquiry. If such inquiry results in the discovery that it is not correct that the entire delay in filing the required reply from the due date for the reply until the filing of a grantable petition pursuant of 37 CFR 1.137(b) was unintentional, petitioner must notify the Office.

The file does not indicate a change of address has been submitted, although the address given on the petition differs from the address of record. If appropriate, a change of address should be filed

in accordance with MPEP 601.03. A courtesy copy of this decision is being mailed to the address given on the petition; however, the Office will mail all future correspondence solely to the address of record.

In view of the above, authorization was given on February 24, 2010 to charge the issue fee of $1510, the publication fee of $300, and the petition fee of $1620 to deposit account number 140-116.

Further correspondence with respect to this matter should be addressed as follows:

By mail: Mail Stop Petition
Commissioner for Patents
P.O. Box 1450
Alexandria, VA 22313-1450

By FAX: (571) 273-8300
Attn: Office of Petitions

By hand: Customer Service Window
Mail Stop Petition
Randolph Building
401 Dulany Street
Alexandria, VA 22314

Telephone inquiries concerning this decision should be directed to Tammara Peyton at (571) 272-6052 or in his absence to the undersigned at (571) 272-3217.

The Application is being referred to the Office of Data Management for further processing.

David Bucci
Petitions Examiner
Office of Petitions

Cc:
Robert H. Earp, III
21000 Brookpark Road, M.S. 21-14
Cleveland, Ohio, 44135

SPE RESPONSE FOR CERTIFICATE OF CORRECTION

Paper No.: _____

DATE : August 3, 2007

TO SPE OF : ART UNIT 2891

SUBJECT : Request for Certificate of Correction for Appl. No./10/926471patent no.7235865

Please respond to this request for a certificate of correction within 7 days.

Please review the requested changes/corrections as shown in the **COCIN** document(s) in the IFW application image. No new matter should be introduced, nor should the scope or meaning of the claims be changed.

Please complete the response (see below) and forward the completed response to scanning using document code **COCX**.

Magdalene Talley

Certificates of Correction Branch

703-308-9390 ext. 116

Thank You For Your Assistance

The request for issuing the above-identified correction(s) is hereby:

Note your decision on the appropriate box.

- ☒ **Approved** — **All** changes apply.
- ☐ **Approved in Part** — Specify below which changes **do not** apply.
- ☐ **Denied** — State the reasons for denial below.

Comments: _____

B. WILLIAM BAUMGARTNER
SUPERVISORY PATENT EXAMINER
TECHNOLOGY CENTER

10/12/07 2891

SPE Art Unit

SPE RESPONSE FOR CERTIFICATE OF CORRECTION

Paper No.: _____

DATE : August 22, 2007

TO SPE OF : ART UNIT 3677

SUBJECT : Request for Certificate of Correction for Appl. No. 10/926480 patent no. 7226263

Please respond to this request for a certificate of correction within 7 days.

Please review the requested changes/corrections as shown in the **COCIN** document(s) in the IFW application image. No new matter should be introduced, nor should the scope or meaning of the claims be changed.

Please complete the response (see below) and forward the completed response to scanning using document code **COCX**.

Magdalene Talley

Certificates of Correction Branch

703-308-9390 ext. 116

Thank You For Your Assistance

The request for issuing the above-identified correction(s) is hereby:

Note your decision on the appropriate box.

- ☐ **Approved** — All changes apply.
- ☐ **Approved in Part** — Specify below which changes **do not** apply.
- ☒ **Denied** — State the reasons for denial below.

Comments: "means of" was explicitly deleted in applicant's 8/15/2006 response. It is not required to make the abstract understandable.

SPE

3677
Art Unit

UNITED STATES PATENT AND TRADEMARK OFFICE

Commissioner for Patents
United States Patent and Trademark Office
P.O. Box 1450
Alexandria, VA 22313-1450
www.uspto.gov

Date Mailed : February 29, 2008

Serial no. : 10/926480
Patent No. :7226263 , B2
Patent Issued :June 5, 2007
Inventor(s) : Jorg Schwarzbich
Title :DEVICE FOR CONNECTING COMPONENT PARTS, COMPRISING A BLIND RIVER FASTENER

Re: Request for Certificate of Correction

Consideration has been given your request for the issuance of a certificate of correction for the above-identified patent.

Respecting the alleged error noted in your request, "means of" was explicitly deleted in applicants 8-15-2006 response. It is not required to make the *Abstract* understandable.

In view of the foregoing, your request is hereby denied.

Magdalene Talley
For Cecelia B. Newman, Supervisor
Decision and Certificate
Of Correction Branch
(703)308-9390 ext. 116
Fax (703) 746-4656

Harold V. Stotland
Seyfarth Shaw, LLP
131 South Deraborn-Ste. 2400
Chicago, IL 60603

CBN/mt

UNITED STATES PATENT AND TRADEMARK OFFICE

UNITED STATES DEPARTMENT OF COMMERCE
United States Patent and Trademark Office
Address: COMMISSIONER FOR PATENTS
P.O. Box 1450
Alexandria, Virginia 22313-1450
www.uspto.gov

ROBERTS MLOTKOWSKI SAFRAN & COLE, P.C.
Intellectual Property Department
P.O. Box 10064
MCLEAN, VA 22102-8064

Mail Date: 04/20/2010

Applicant	: Todd D. Gatts	: DECISION ON REQUEST FOR
Patent Number	: 7630330	: RECALCULATION of PATENT
Issue Date	: 12/08/2009	: TERM ADJUSTMENT IN VIEW
Appliction No	: 10/926,495	: OF WYETH AND NOTICE OF INTENT TO
Filed	: 08/26/2004	: ISSUE CERTIFICATE OF CORRECTION
		:

The Request for Recalculation is **GRANTED** to the extent indicated.

The patent term adjustment has been determined to be **1464** days. The USPTO will *sua sponte* issue a certificate of correction reflecting the amount of PTA days determined by the recalculation.

Prior to the issuance of the certificate of correction, the USPTO will afford patentee an opportunity to be heard and request reconsideration. Accordingly, patentee has **one month or thirty (30) days**, whichever is longer, to file a request for reconsideration of this patent term adjustment calculation. See 35 U.S.C. 154(b)(3)(B)(ii) and 37 CFR 1.322(a)(4). No extensions of time will be granted under 37 CFR 1.136.

Patentee should use document code PET.OP if electronically filing a request for reconsideration of this patent term adjustment calculation. The patentee must also include the information required by 37 CFR 1.705(b)(2) and the fee required by 37 CFR 1.18(e). If patentee does not file a timely request for reconsideration of this patent term adjustment calculation including the information required by 37 CFR 1.705(b)(2) and the fee required by 37 CFR 1.18(e), the USPTO will issue a certificate of correction reflecting the PTA determination noted above.

Patentee should be aware that in order to preserve the right to review in the United States District Court for the District of Columbia of the USPTO patent term adjustment determination, patentee must ensure that he or she also take the steps required under 35 U.S.C. 154(b)(4)(A) in a timely manner. Nothing in the request for recalculation should be construed as providing an alternative time frame for commencing a civil action under 35 U.S.C. 154(b)(4)(A).

Any questions concerning this decision should be directed to the Office of Patent Legal Administration at 571-272-7702.

UNITED STATES PATENT AND TRADEMARK OFFICE

Commissioner for Patents
United States Patent and Trademark Office
P.O. Box 1450
Alexandria, VA 22313-1450
www.uspto.gov

MAILED

NOV 09 2009

OFFICE OF PETITIONS

FOLEY & LARDNER LLP
150 EAST GILMAN STREET
P.O. BOX 1497
MADISON, WI 53701-1497

In re Application of	:	
Michael Gillis Kane	:	
Application No. 10/926,521	:	ON APPLICATION FOR
Filed: August 26, 2004	:	PATENT TERM ADJUSTMENT
Atty Docket No.088245-4056	:	

This is in response to the "REQUEST FOR RECONSIDERATION PATENT TERM ADJUSTMENT UNDER 37 C.F.R. § 1.705" filed August 20, 2009. Applicant submits that the patent term adjustment to be indicated on the patent is one thousand one hundred forty (1,140) days, not seven hundred twenty-two (722) days as calculated by the Office as of the mailing of the initial determination of patent term adjustment. Applicant requests this correction solely on the basis that the Office will take in excess of three years to issue this patent.

As the instant application for patent term adjustment requests reconsideration of the patent term adjustment as it relates to the Office's failure to issue the patent within 3 years of the filing date, the application for patent term adjustment under 37 CFR 1.705(b) is **DISMISSED as PREMATURE**.

Knowledge of the actual date the patent issues is required to calculate the amount, if any, of additional patent term patentee is entitled to for Office failure to issue the patent within 3 years. See § 1.702(b). (This is true even where a request for continued examination (RCE) was filed). The computer will not undertake the § 1.702(b) calculation until the actual date of issuance of the patent has been determined. Likewise, the computer will not calculate any further Office delay under § 1.702(a)(4) or applicant delay under § 1.704(c)(10) until the actual date of issuance of the patent has been determined. As such, the Office can not make a determination on the correctness of the patent term adjustment until the patent has issued.

Requesting reconsideration of the patent term adjustment to be indicated on the patent under 37 CFR 1.705(b) based on the initial determination of patent term adjustment and a projected issuance date of the patent (or even the filing date of the request for continued examination) is premature. Accordingly, it is appropriate to dismiss as premature such a request.

Rather than file an application for patent term adjustment under 37 CFR 1.705(b) contesting the 37 CFR 1.702(b) calculation at the time of the mailing of the notice of allowance, applicant is advised that they may wait until the time of the issuance of the patent and file a request for reconsideration of the patent term adjustment pursuant to 37 CFR 1.705(d). As the USPTO does not calculate the amount of time earned pursuant to 37 CFR 1.702(b) until the time of the issuance of the patent, the Office will consider any request for reconsideration of the patent term adjustment due to an error in the calculation of 37 CFR 1.702(b) to be timely if the request for reconsideration is filed within two months of the issuance of the patent. However, as to all other bases for contesting the initial determination of patent term adjustment received with the notice of allowance, applicant must timely file an application for patent term adjustment prior to the payment of the issue fee[1].

It is noted that any period of adjustment will be entered in light of 35 U.S.C. 154(B) GUARANTEE OF NO MORE THAN 3-YEAR APPLICATION PENDENCY, which provides that:

> Subject to the limitations under paragraph (2), if the issue of an original patent is delayed due to the failure of the United States Patent and Trademark Office to issue a patent within 3 years after the actual filing date of the application in the United States, not including –

---

[1] For example, if applicant disputes both the calculation of patent term adjustment under 37 CFR 1.702(a)(1) for Office failure to mail a first Office action or notice of allowance not later than fourteen months after the date on which the application was filed and under 37 CFR 1.702(b) for Office failure to issue a patent within three years of the actual filing date of the application, then applicant must still timely file an application for patent term adjustment prior to the payment of the issue fee to contest the calculation of Office delay in issuing a first Office action or notice of allowance. See 37 CFR 1.705(b) and 35 U.S.C. 154(b)(3)(B). A dispute as to the calculation of the §1.702(a)(1) period raised on request for reconsideration of patent term adjustment under 37 CFR 1.705(d) will be dismissed as untimely filed.

(i) any time consumed by continued examination of the application requested by the applicant under section 132(b);

It is further noted that a Request for Continued Examination (RCE) was filed in this application on March 2, 2009.

The Office acknowledges submission of the $200.00 fee set forth in 37 CFR 1.18(e) for consideration of the application for patent term adjustment under 37 CFR 1.705(b).

Any request for reconsideration of the patent term adjustment indicated on the patent must be timely filed within 2 months after issuance pursuant to 37 CFR 1.705(d) and must include payment of the required fee under 37 CFR 1.18(e).

The Office of Data Management has been advised of this decision. This application is being referred to the Office of Data Management for issuance of the patent.

Telephone inquiries specific to this decision should be directed to Kenya A. McLaughlin, Petitions Attorney, at (571) 272-3222.

Christina Tartera Donnell

Christina Tartera Donnell
Senior Petitions Attorney
Office of Petitions

UNITED STATES PATENT AND TRADEMARK OFFICE

Commissioner for Patents
United States Patent and Trademark Office
P.O. Box 1450
Alexandria, VA 22313-1450
www.uspto.gov

MAILED

MAY 19 2010

OFFICE OF PETITIONS

FOLEY & LARDNER LLP
150 EAST GILMAN STREET
P.O. BOX 1497
MADISON WI 53701-1497

In re Patent No. 7,633,470	:	DECISION ON REQUEST
Michael Gillis Kane	:	FOR
Issue Date: December 15, 2009	:	RECONSIDERATION OF
Application No. 10/926,521	:	PATENT TERM ADJUSTMENT
Filed: August 26, 2004	:	and
Atty Docket No.088245-4056	:	NOTICE OF INTENT TO ISSUE
	:	CERTIFICATE OF CORRECTION

This is a decision on the petition filed on January 5, 2010, which is being treated as a petition under 37 CFR 1.705(d) requesting that the patent term adjustment indicated on the above-identified patent be corrected to indicate that the term of the above-identified patent is extended or adjusted by one thousand, one hundred and forty (1,140) days.

The petition to correct the patent term adjustment indicated on the above-identified patent to indicate that the term of the above-identified patent is extended or adjusted by one thousand, one hundred and thirty-nine (1,139) days is **GRANTED to the extent indicated herein.**

As the period from the filing date of the request for continued examination (RCE) to the issue date of the patent is not included in the "B" delay period, the over three year period begins on August 27, 2007, and ends on March 1, 2009, the day before the RCE was filed, and is 553 days, not 554 days. See 35 U.S.C. 154(b)(1)(B)(i). As such, the patent term adjustment is 393, not 394 days.

The Office will *sua sponte* issue a certificate of correction. Pursuant to 37 CFR 1.322, the Office will not issue a certificate of correction without first providing assignee or patentee an opportunity to be heard. Accordingly, patentees are given **one (1) month or thirty (30) days**, whichever is longer, from the mail date of this decision to respond. No extensions of time will be granted under § 1.136.

Deposit account 19-0741 will be charged $200.00 for the fee under 37 CFR 1.18(e). No additional fees are due.

The application is being forwarded to the Certificates of Corrections Branch for issuance of a certificate of correction. The Office will issue a certificate of correction indicating that the term of the above-identified patent is extended or adjusted by **one thousand, one hundred and thirty-nine (1,139) days**.

Telephone inquiries specific to this matter should be directed to the undersigned at (571) 272-3222.

Kenya A. McLaughlin
Petitions Attorney
Office of Petitions

Enclosure: Copy of DRAFT Certificate of Correction

DRAFT COPY

UNITED STATES PATENT AND TRADEMARK OFFICE

CERTIFICATE OF CORRECTION

PATENT : 7,633,470 B2

DATED : Dec. 15, 2009

INVENTOR(S) : Kane

It is certified that error appears in the above-identified patent and that said Letters Patent is hereby corrected as shown below:

On the cover page,

[*] Notice: Subject to any disclaimer, the term of this patent is extended or adjusted under 35 USC 154(b) by (722) days

Delete the phrase "by 722 days" and insert – by 1139 days--

UNITED STATES PATENT AND TRADEMARK OFFICE

UNITED STATES DEPARTMENT OF COMMERCE
United States Patent and Trademark Office
Address: COMMISSIONER FOR PATENTS
P.O. Box 1450
Alexandria, Virginia 22313-1450
www.uspto.gov

DEAN D. SMALL
THE SMALL PATENT LAW GROUP LLP
225 S. MERAMEC, STE. 725T
ST. LOUIS, MO 63105

Mail Date: 04/20/2010

Applicant	: Erik Normann Steen	: DECISION ON REQUEST FOR
Patent Number	: 7604595	: RECALCULATION of PATENT
Issue Date	: 10/20/2009	: TERM ADJUSTMENT IN VIEW
Appliction No	: 10/926,547	: OF WYETH AND NOTICE OF INTENT TO
Filed	: 08/26/2004	: ISSUE CERTIFICATE OF CORRECTION
		:

The Request for Recalculation is **GRANTED** to the extent indicated.

The patent term adjustment has been determined to be **1455** days. The USPTO will *sua sponte* issue a certificate of correction reflecting the amount of PTA days determined by the recalculation.

Prior to the issuance of the certificate of correction, the USPTO will afford patentee an opportunity to be heard and request reconsideration. Accordingly, patentee has **one month or thirty (30) days**, whichever is longer, to file a request for reconsideration of this patent term adjustment calculation. See 35 U.S.C. 154(b)(3)(B)(ii) and 37 CFR 1.322(a)(4). No extensions of time will be granted under 37 CFR 1.136.

Patentee should use document code PET.OP if electronically filing a request for reconsideration of this patent term adjustment calculation. The patentee must also include the information required by 37 CFR 1.705(b)(2) and the fee required by 37 CFR 1.18(e). If patentee does not file a timely request for reconsideration of this patent term adjustment calculation including the information required by 37 CFR 1.705(b)(2) and the fee required by 37 CFR 1.18(e), the USPTO will issue a certificate of correction reflecting the PTA determination noted above.

Patentee should be aware that in order to preserve the right to review in the United States District Court for the District of Columbia of the USPTO patent term adjustment determination, patentee must ensure that he or she also take the steps required under 35 U.S.C. 154(b)(4)(A) in a timely manner. Nothing in the request for recalculation should be construed as providing an alternative time frame for commencing a civil action under 35 U.S.C. 154(b)(4)(A).

Any questions concerning this decision should be directed to the Office of Patent Legal Administration at 571-272-7702.

UNITED STATES PATENT AND TRADEMARK OFFICE

Commissioner for Patents
United States Patent and Trademark Office
P.O. Box 1450
Alexandria, VA 22313-1450
www.uspto.gov

SCHERING-PLOUGH CORPORATION
PATENT DEPARTMENT (K-6-1, 1990)
2000 GALLOPING HILL ROAD
KENILWORTH, NJ 07033-0530

COPY MAILED

MAY 26 2009

OFFICE OF PETITIONS

In re Application of	:	
Duane A. BURNETT, et al	:	
Application No. 10/926,557	:	ON PETITION
Filed: August 26, 2004	:	
Attorney Docket No. CN06089US01	:	

This is a decision on the petition, filed January 26, 2009, which is being treated as a request under 37 CFR 3.81(b)[1] to correct the assignee's name on the Fee(s) Transmittal form PTOL-85(b) so that the Letters Patent will issue to the assignee.

The request is **DISMISSED**.

Petitioner states that the correct assignee's name is Schering Corporation and Pharmacopeia Drug Discovery, Inc. and that an incorrect assignee's name was included on the Part B - Fee(s) Transmittal form at the time of payment of the issue fee.

A request to correct the Assignee under 37 CFR 3.81(b) should include:

> *After payment of the issue fee:* Any request for issuance of an application in the name of the assignee submitted after the date of payment of the issue fee, and any request for a patent to be corrected to state the name of the assignee, must state that the assignment was submitted for recordation as set forth in § 3.11 before issuance of the patent, and must include a request for a certificate of correction under § 1.323 of this chapter (accompanied by the fee set forth in § 1.20(a)) and the processing fee set forth in § 1.17(i) of this chapter.

The request under 37 CFR 3.81(b) was not accompanied by a request for a certificate of correction (and fee) as required by 3.81(b). *See also* MPEP 1481.01.

---

[1] *See* MPEP 1309, subsection II and Official Gazette of June 22, 2004

The request was not accompanied by a statement that the failure to include the correct assignee name on the PTOL-85B was inadvertent. As petitioner has failed to comply with the provisions of 37 CFR 3.81(b), the request cannot be granted at this time.

Inquiries concerning this decision should be directed to Diane Goodwyn at (571) 272-6735. Any questions concerning issuance of a certificate of correction should be directed to the Certificates of Correction Branch at (571) 272-4200.

Thurman Page
Petitions Examiner
Office of Petitions

UNITED STATES PATENT AND TRADEMARK OFFICE

Commissioner for Patents
United States Patent and Trademark Office
P.O. Box 1450
Alexandria, VA 22313-1450
www.uspto.gov

BLACK LOWE & GRAHAM PLLC
701 FIFTH AVENUE, SUITE 4800
SEATTLE WA 98104

COPY MAILED

MAY 3 1 2005

OFFICE OF PETITIONS

In re Application of
Eichinger, et al.
Application No. 10/926,569
Filed: August 25, 2004
Attorney Docket No. BING-1-1107
For: MULTIFUNCTIONAL CRYO-INSTALLATION APPARATUS AND METHODS

DECISION GRANTING PETITION

This is a decision on the petition under 37 CFR 1.182, filed February 4, 2005, requesting that the Office accept two Powers of Attorney, each signed by less than all of the applicants of the above-referenced patent application.

The petition under 37 CFR 1.182 is **GRANTED**.

MPEP 402.10 states that in order to give or revoke power of attorney without signatures of all applicants or owners, a petition and fee under 37 CFR 1.182 must be filed, giving good and sufficient reasons as to why such papers should be accepted. Two of the four joint inventors have appointed practitioners registered at Customer No. 23351. Two of the four joint inventors have appointed practitioners associated with Customer Number 46020. There appears to be no conflict with this request, as representatives of both groups of joint inventors have filed this petition.

Accordingly, the petition is granted. Dual correspondence will not be undertaken.
A representative of each of the parties appointed must sign all subsequent replies submitted to the Office. See *In re Goldstein*, 16 USPQ2d 1963 (Dep. Assist. Comm'r Pat. 1988).

As agreed to in the petition, all correspondence will be mailed to the address associated with Customer No. 46020.

After the mailing of this decision, the application will be forwarded to Technology Center 1700 for examination in due course.

Telephone inquiries should be directed to the undersigned at (571) 272-3230.

E. Shirene Willis

E. Shirene Willis
Senior Petitions Attorney
Office of Petitions

SPE: D. Bagnell

SPE RESPONSE FOR CERTIFICATE OF CORRECTION

Paper No.: _____

DATE : 10/16/06

TO SPE OF : ART UNIT 3672

SUBJECT : Request for Certificate of Correction for Appl. No.: 10/926,574 Patent No.: 7890014

Please respond to this request for a certificate of correction within 7 days.

Please review the requested changes/corrections as shown in the **COCIN** document(s) in the IFW application image. No new matter should be introduced, nor should the scope or meaning of the claims be changed.

Please complete the response (see below) and forward the completed response to scanning using document code **COCX**.

Lamonte M. Newsome
Certificates of Correction Branch
703-308-9390 ext. 112

Thank You For Your Assistance

The request for issuing the above-identified correction(s) is hereby:

Note your decision on the appropriate box.

- ☑ **Approved** — **All** changes apply.
- ☐ **Approved in Part** — Specify below which changes **do not** apply.
- ☐ **Denied** — State the reasons for denial below.

Comments: _____

DAVID BAGNELL
SUPERVISORY PATENT EXAMINER
TECHNOLOGY CENTER 3600

SPE

3672
Art Unit

UNITED STATES PATENT AND TRADEMARK OFFICE

Commissioner for Patents
United States Patent and Trademark Office
P.O. Box 1450
Alexandria, VA 22313-1450
www.uspto.gov

Patent Law Office of David G. Beck
P.O. Box 1146
Mill Valley, CA 94942

COPY MAILED

MAR 3 1 2008

OFFICE OF PETITIONS

In re Application of	:	
Ross Alan Tessien, et al.	:	
Application No. 10/926,602	:	DECISION ON PETITION
Filed: August 25, 2004	:	TO WITHDRAW
Attorney Docket No. IMP019	:	FROM RECORD
	:	

This is a decision on the Request to Withdraw as attorney or agent of record under 37 C.F.R. § 1.36(b), filed March 20, 2007.

The request is **APPROVED**.

A grantable request to withdraw as attorney/agent of record must be signed by every attorney/agent seeking to withdraw or contain a clear indication that one attorney is signing on behalf of another/others. A request to withdraw will not be approved unless at least 30 (thirty) days would remain between the date of approval and the later of the expiration date of a time to file a response or the expiration date of the maximum time period which can be extended under 37 C.F.R. § 1.136(a).

The request was signed by David G. Beck on behalf of all attorneys of record. All attorneys/agents have been withdrawn. Applicant is reminded that there is no attorney of record at this time.

All future correspondence will be directed to the first named inventor Ross Alan Tessien at the address indicated below.

The application became abandoned for failure to timely respond to the Office action mailed December 12, 2006.

Telephone inquiries concerning this decision should be directed to Terri Williams at 571-272-2991.

T. Williams

Terri Williams
Petitions Examiner
Office of Petitions

cc: **Ross Tessien c/o Impulse Devices, Inc.**
13366 Grass Valley Ave.
Unit H
Grass Valley, CA 95945

UNITED STATES PATENT AND TRADEMARK OFFICE

UNITED STATES DEPARTMENT OF COMMERCE
United States Patent and Trademark Office
Address: COMMISSIONER FOR PATENTS
P.O. Box 1450
Alexandria, Virginia 22313-1450
www.uspto.gov

APPLICATION NUMBER	FILING OR 371(C) DATE	FIRST NAMED APPLICANT	ATTY. DOCKET NO./TITLE
10/926,602	08/25/2004	Ross Alan Tessien	IMP019

CONFIRMATION NO. 3251

POWER OF ATTORNEY NOTICE

45147
PATENT LAW OFFICE OF DAVID G. BECK
P. O. BOX 1146
MILL VALLEY, CA 94942

OC000000029166551

Date Mailed: 03/31/2008

NOTICE REGARDING CHANGE OF POWER OF ATTORNEY

This is in response to the Power of Attorney filed 03/20/2007.

- The withdrawal as attorney in this application has been accepted. Future correspondence will be mailed to the new address of record. 37 CFR 1.33.

/tswilliams/

Office of Initial Patent Examination (571) 272-4000 or 1-800-PTO-9199

UNITED STATES PATENT AND TRADEMARK OFFICE

Commissioner for Patents
United States Patent and Trademark Office
P.O. Box 1450
Alexandria, VA 22313-1450
www.uspto.gov

BAKER BOTTS L.L.P.
PATENT DEPARTMENT
98 SAN JACINTO BLVD., SUITE 1500
AUSTIN TX 78701-4039

COPY MAILED
AUG 1 1 2006
OFFICE OF PETITIONS

In re Application of	:	
Arndt et al.	:	DECISION ON PETITION
Application No. 10/926,605	:	UNDER 37 CFR 1.137(b)
Filed: August 26, 2004	:	
Attorney Docket No. 075760.0101	:	

This is a decision on the petition under 37 CFR 1.137(b), filed March 31, 2006, to revive the above-identified application. The petition was recently forwarded to the Office of Petitions for a decision on the merits. The Office sincerely apologizes for any inconvenience.

The application became abandoned for failure to reply within the meaning of 37 CFR 1.113 in a timely and proper manner to the final Office action mailed August 12, 2005, which set a shortened statutory period for reply of three (3) months. Petitioner obtained an extension of time for response within the second month. Accordingly, the application became abandoned on January 13, 2006.

Petitioner has met the requirements to revive the above-identified application pursuant to 37 CFR 1.137(b). Petitioner submitted the required reply in the form of a Request for Continued Examination and a submission, paid the requisite fees, and made the proper statement of unintentional delay.

The petition is **granted.**

This matter is being referred to Technology Center Art Unit 1762.

Telephone inquiries regarding this decision should be directed to the undersigned at (571) 272-3211.

Christina T. Donnell

Christina Tartera Donnell
Senior Petitions Attorney
Office of Petitions

UNITED STATES PATENT AND TRADEMARK OFFICE

Commissioner for Patents
United States Patent and Trademark Office
P.O. Box 1450
Alexandria, VA 22313-1450
www.uspto.gov

MAILED

APR 2 6 2010

OFFICE OF PETITIONS

STEVEN L. NICHOLS
VAN COTT, BAGLEY, CORNWALL & MCCARTHY
36 SOUTH STATE STREET
SUITE 1900
SALT LAKE CITY, UT 84111

In re Application of	:	
Thomas Poslinski	:	
Application No. 10/926,612	:	DECISION ON PETITION
Filed: August 26, 2004	:	
Attorney Docket No. 40000-0057	:	

This is a decision on the petition, filed February 9, 2010, which is being treated as a petition under 37 CFR 1.181 (no fee) requesting withdrawal of the holding of abandonment in the above-identified application, or in the alternative a petition under the unintentional provisions of 37 CFR 1.137(b) to revive the above identified application.

The petition is **GRANTED**.

This application was held abandoned for failure to timely pay the issue and publication fees on or before January 9, 2010, as required by the Notice of Allowance and Fee(s) Due (Notice), mailed November 9, 2009.

Petitioner asserts that the Notice dated November 9, 2009 was not received.

A review of the written record indicates no irregularity in the mailing of the Notice, and, in the absence of any irregularity, there is a strong presumption that the Notice was properly mailed to the practitioner at the address of record. This presumption may be overcome by a showing that the Notice was not in fact received. In this regard, the showing required to establish the failure to receive the Notice must consist of the following:

1. a statement from practitioner stating that the Notice was not received by the practitioner;
2. a statement from the practitioner attesting to the fact that a search of the file jacket and docket records indicates that the Notice was not received; and

3. a copy of the docket record where the non-received Notice would have been entered and docketed had it been received must be attached to and referenced in the practitioner's statement.

See MPEP § 711.03(c) under subheading "Petition to Withdraw Holding of Abandonment Based on Failure to Receive Office Action," and "Withdrawing the Holding of Abandonment When Office Actions Are Not Received," 1156 Official Gazette 53 (November 16, 1993).
The petition satisfies the above-stated requirements. Accordingly, the application was not abandoned in fact.

In view of the above, the Notice of Abandonment is hereby **vacated** and the holding of abandonment **withdrawn**.

Since petitioner has already satisfied the requirements listed in the Notice of Allowance by providing payment for the Issue and publication fee, this application is being forwarded to the Office of Data Management for further processing in accordance with this decision on petition.

The petition under 37 CFR 1.137(b) is **DISMISSED AS MOOT**.

In view of the granting of the petition filed under 37 CFR 1.181, the petition filed under 37 CFR 1.137(b) is deemed as unnecessary and dismissed as moot.

Telephone inquiries concerning this decision should be directed to April M., Wise at (571) 272-1642. All other inquiries concerning this application should be directed to the Office of Data Management at their hotline 571-272-4200.

This application is being referred to the Office of Data Management for further processing in accordance with this decision on petition

/Carl Friedman/
Carl Friedman
Petitions Examiner
Office of Petitions

UNITED STATES PATENT AND TRADEMARK OFFICE

UNITED STATES DEPARTMENT OF COMMERCE
United States Patent and Trademark Office
Address: COMMISSIONER FOR PATENTS
P.O. Box 1450
Alexandria, Virginia 22313-1450
www.uspto.gov

MCANDREWS HELD & MALLOY, LTD
500 WEST MADISON STREET
SUITE 3400
CHICAGO, IL 60661

Mail Date: 04/28/2010

Applicant	: Gary Heinz	: DECISION ON REQUEST FOR
Patent Number	: 7634764	: RECALCULATION of PATENT
Issue Date	: 12/15/2009	: TERM ADJUSTMENT IN VIEW
Application No	: 10/926,620	: OF WYETH AND NOTICE OF INTENT TO
Filed	: 08/26/2004	: ISSUE CERTIFICATE OF CORRECTION
		:

The Request for Recalculation is **GRANTED** to the extent indicated.

The patent term adjustment has been determined to be **724** days. The USPTO will *sua sponte* issue a certificate of correction reflecting the amount of PTA days determined by the recalculation.

Prior to the issuance of the certificate of correction, the USPTO will afford patentee an opportunity to be heard and request reconsideration. Accordingly, patentee has **one month or thirty (30) days**, whichever is longer, to file a request for reconsideration of this patent term adjustment calculation. See 35 U.S.C. 154(b)(3)(B)(ii) and 37 CFR 1.322(a)(4). No extensions of time will be granted under 37 CFR 1.136.

Patentee should use document code PET.OP if electronically filing a request for reconsideration of this patent term adjustment calculation. The patentee must also include the information required by 37 CFR 1.705(b)(2) and the fee required by 37 CFR 1.18(e). If patentee does not file a timely request for reconsideration of this patent term adjustment calculation including the information required by 37 CFR 1.705(b)(2) and the fee required by 37 CFR 1.18(e), the USPTO will issue a certificate of correction reflecting the PTA determination noted above.

Patentee should be aware that in order to preserve the right to review in the United States District Court for the District of Columbia of the USPTO patent term adjustment determination, patentee must ensure that he or she also take the steps required under 35 U.S.C. 154(b)(4)(A) in a timely manner. Nothing in the request for recalculation should be construed as providing an alternative time frame for commencing a civil action under 35 U.S.C. 154(b)(4)(A).

Any questions concerning this decision should be directed to the Office of Patent Legal Administration at 571-272-7702.

UNITED STATES PATENT AND TRADEMARK OFFICE

UNITED STATES DEPARTMENT OF COMMERCE
United States Patent and Trademark Office
Address: COMMISSIONER FOR PATENTS
P.O. Box 1450
Alexandria, Virginia 22313-1450
www.uspto.gov

EPSON RESEARCH AND DEVELOPMENT INC
INTELLECTUAL PROPERTY DEPT
2580 ORCHARD PARKWAY, SUITE 225
SAN JOSE, CA 95131

Mail Date: 04/20/2010

Applicant	: Ian Clarke	: DECISION ON REQUEST FOR
Patent Number	: 7590275	: RECALCULATION of PATENT
Issue Date	: 09/15/2009	: TERM ADJUSTMENT IN VIEW
Appliction No	: 10/926,658	: OF WYETH AND NOTICE OF INTENT TO
Filed	: 08/26/2004	: ISSUE CERTIFICATE OF CORRECTION
		:

The Request for Recalculation is **GRANTED** to the extent indicated.

The patent term adjustment has been determined to be **782** days. The USPTO will *sua sponte* issue a certificate of correction reflecting the amount of PTA days determined by the recalculation.

Prior to the issuance of the certificate of correction, the USPTO will afford patentee an opportunity to be heard and request reconsideration. Accordingly, patentee has **one month or thirty (30) days**, whichever is longer, to file a request for reconsideration of this patent term adjustment calculation. See 35 U.S.C. 154(b)(3)(B)(ii) and 37 CFR 1.322(a)(4). No extensions of time will be granted under 37 CFR 1.136.

Patentee should use document code PET.OP if electronically filing a request for reconsideration of this patent term adjustment calculation. The patentee must also include the information required by 37 CFR 1.705(b)(2) and the fee required by 37 CFR 1.18(e). If patentee does not file a timely request for reconsideration of this patent term adjustment calculation including the information required by 37 CFR 1.705(b)(2) and the fee required by 37 CFR 1.18(e), the USPTO will issue a certificate of correction reflecting the PTA determination noted above.

Patentee should be aware that in order to preserve the right to review in the United States District Court for the District of Columbia of the USPTO patent term adjustment determination, patentee must ensure that he or she also take the steps required under 35 U.S.C. 154(b)(4)(A) in a timely manner. Nothing in the request for recalculation should be construed as providing an alternative time frame for commencing a civil action under 35 U.S.C. 154(b)(4)(A).

Any questions concerning this decision should be directed to the Office of Patent Legal Administration at 571-272-7702.

UNITED STATES PATENT AND TRADEMARK OFFICE

FEB 20 2007

Commissioner for Patents
United States Patent and Trademark Office
P.O. Box 1450
Alexandria, VA 22313-1450
www.uspto.gov

HOFFMANN-LA ROCHE INC.
PATENT LAW DEPARTMENT
340 KINGSLAND STREET
NUTLEY, NJ 07110

In re Application of	:
Bernd Buettelmann et al	:
Serial No.: 10/926,670	: PETITION DECISION
Filed: August 26, 2004	:
Attorney Docket No.: 21871 US	:

This is in response to the petition under 37 CFR 1.144, filed December 18, 2006, requesting withdrawal of an improper restriction requirement.

BACKGROUND

A review of the file history shows that this application was filed under 35 U.S.C. 111 on August 26, 2004, and contained claims 1-17. In a first Office action, mailed June 6, 2006, the examiner required restriction between the inventions claimed, as follows:

Group I – the instances where R^2 is aryl and X is CH;
Group II – the instances where R^2 is pyridyl and X is CH;
Group III – the instances where R^2 is aryl and X is N;
Group IV – the instances where R^2 is pyridyl and X is N;
Group V – any other compounds not grouped above;
Group VI – Claims 10-12 drawn to processes;
Group VII – Claims 14-17 drawn to multiple uses.

An election of species was also required for whichever group was elected.

The examiner reasoned that the compounds of Groups I-V were based on different heterocyclic nuclei and thus subject to restriction. Groups VI and VII were found distinct as being directed to processes of making and using of the compounds.

Applicants replied on July 10, 2006, electing Group IV and traversing the requirement on the basis that restriction within a claim is improper, especially in a Markush group claim. Applicants discussed In re Weber, cited by the examiner, to refute the examiner's reasons for making a restriction requirement within a claim and also relied on M.P.E.P. 803.02.

The examiner mailed a new Office action to applicants on September 14, 2006, acknowledging the election of Group IV and the species, and the traversal of the requirement. The examiner maintained the requirement based on essentially the same reasoning as in the previous Office action. The requirement was not made Final. The examiner rejected claims 1-3, 6-7 and 13 for obvious double patenting over SN 11/141,547.

This petition was filed on December 18, 2006, traversing the restriction requirement as being in error. Applicants also filed a reply to the Office action which has not yet been considered by the examiner pending decision on this petition.

DISCUSSION

Applicants' petition is directed primarily to the restriction between Groups I-V, directed to the compound claims of formula I as shown:

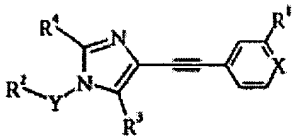

As set forth, the examiner based the restriction requirement of the first four Groups on two variables, X and R^2. X has two values, N and CH; and R_2 has two basic values, aryl and heteroaryl, set forth in the requirement as pyridyl. Group V was added to cover any other heterocycic structures. Both aryl and heteroaryl may be substituted. The examiner did not specifically identify which claims these Groups applied to, but based on the reasoning set forth in the Office action and the claims excluded by Groups VI and VII, it applies to claims 1-9 and 13.

Applicants state that the restriction requirement is not in compliance with established case law and Office procedures. Applicants state that intraclaim restriction is not permitted in view of *In re Weber* and other cases and that the examiner has not followed M.P.E.P. 803.02 which does not permit an examiner created subgenus.

Applicants rely on *In re Weber* for the proposition that restriction within a claim is improper and discuss the reasoning of Weber and the court's conclusion. However applicants misstate the conclusion to some extent. *In re Weber*, and M.P.E.P. 803.02, prohibit restriction between species where there is a stated common use or property and there is a substantial common structure present. In the above structure it is clear that there is a substantial common structure comprised of the imidazole ring and the second ring bonded to it by the ethynyl bridge. The second ring is either benzyl or pyridyl. The existence of the variable second ring permits restriction within the claim with respect to only the benzyl and pyridyl structures. No other restriction is permissible. Thus restriction within a claim is permitted under *In re Weber* where there are multiple common structures, as above, rather than one common structure. Rings having variable members generally lead to this conclusion since a ring structure is generally not divisible or is considered as a single element in determining a common structure.

The examiner alleges in justifying the maintaining of the restriction requirement that the structure covers billions of compounds. Based on the fact that there are only six variables (including X) and the values of the variables are relatively limited, the number of individual compounds encompassed by the structure appears to be more in the thousands than the billions.

In view of the above the restriction requirement is redefined as:

Group I – claims 1-5 and 13 where X is CH;
Group II – claims 1-3, 6-9 and 13 where X is N;
Group III – claims 10-12 directed to processes of making;
Group IV – claims 14-17 directed to processes of using or treating.

Inasmuch as applicants have elected the product claims of previous Group IV which is encompassed by new Group II, Group II is considered elected. Further, claims directed to processes of making or using which encompass all of the limitations of allowed product claims are subject to rejoinder as follows:

The examiner has required restriction between product and process claims. Where applicant elects claims directed to the product, and the product claims are subsequently found allowable, withdrawn process claims that depend from or otherwise require all the limitations of the allowable product claim will be considered for rejoinder. All claims directed to a nonelected process invention must require all the limitations of an allowable product claim for that process invention to be rejoined.

In the event of rejoinder, the requirement for restriction between the product claims and the rejoined process claims will be withdrawn, and the rejoined process claims will be fully examined for patentability in accordance with 37 CFR 1.104. Thus, to be allowable, the rejoined claims must meet all criteria for patentability including the requirements of 35 U.S.C. 101, 102, 103 and 112. Until all claims to the elected product are found allowable, an otherwise proper restriction requirement between product claims and process claims may be maintained. Withdrawn process claims that are not commensurate in scope with an allowable product claim will not be rejoined. See MPEP § 821.04(b). Additionally, in order to retain the right to rejoinder in accordance with the above policy, applicant is advised that the process claims should be amended during prosecution to require the limitations of the product claims. **Failure to do so may result in a loss of the right to rejoinder**. Further, note that the prohibition against double patenting rejections of 35 U.S.C. 121 does not apply where the restriction requirement is withdrawn by the examiner before the patent issues. See MPEP § 804.01.

DECISION

The petition is **GRANTED.**

The application will be forwarded to the examiner for consideration of applicants' reply filed December 18, 2006, and further action not inconsistent with this decision.

Should there be any questions about this decision please contact William R. Dixon, Jr., by letter addressed to Director, TC 1600, at the address listed above, or by telephone at 571-272-0519 or by facsimile sent to the general Office facsimile number, 571-273-8300.

George C. Elliott.
Director, Technology Center 1600

UNITED STATES PATENT AND TRADEMARK OFFICE

Commissioner for Patents
United States Patent and Trademark Office
P.O. Box 1450
Alexandria, VA 22313-1450
www.uspto.gov

AUZVILLE JACKSON, JR.
8652 RIO GRANDE ROAD
RICHMOND VA 23229

MAILED

JAN 25 2010

OFFICE OF PETITIONS

ON PETITION

In re Patent No. 6,951,685
Issue Date: October 4, 2005
Application No. 10/926,681
Filed: August 25, 2004
Attorney Docket No. 1539(ITS)DIV

This is a decision on the petition under 37 CFR 1.378(c), filed November 13, 2009, to accept the unintentionally delayed payment of a maintenance fee for the above-identified patent.

The petition is **GRANTED**.

This patent expired on October 4, 2009, for failure to pay the three and one-half year maintenance fee. Since this petition was submitted within twenty-four months after the six-month grace period provided in 37 CFR 1.362(e), the petition was timely filed under the provisions of 37 CFR 1.378(c).

The maintenance fee is hereby accepted and the above-identified patent is reinstated as of the mail date of this decision.

There is no indication that the person signing the petition was ever given a power of attorney to prosecute the application. If the person signing the petition desires to receive future correspondence regarding this application, the appropriate power of attorney document must be submitted.

The Office acknowledges a credit card payment of $2620. Since the maintenance fee and surcharge total is $2130, the balance of $490 will be refunded to petitioner by Treasury Check within the normal course of business.

Telephone inquiries concerning this decision should be directed to the undersigned at (571) 272-6735.

The patent file is being forwarded to Files Repository.

/DCG/
Diane C. Goodwyn
Petitions Examiner
Office of Petitions

UNITED STATES PATENT AND TRADEMARK OFFICE

Commissioner for Patents
United States Patent and Trademark Office
P.O. Box 1450
Alexandria, VA 22313-1450
www.uspto.gov

BLACKWELL SANDERS PEPER MARTIN LLP
4801 MAIN STREET
SUITE 1000
KANSAS CITY MO 64112

COPY MAILED

SEP 1 1 2006

OFFICE OF PETITIONS

In re Application of	:	
Pierce, et al.	:	
Application No. 10/926,721	:	DECISION ON PETITION
Filed: August 26, 2004	:	TO WITHDRAW
Attorney Docket No. 16967.10002-1.6	:	FROM RECORD
	:	

This is a decision on the Request to Withdraw as attorney or agent of record under 37 C.F.R. § 1.36(b), filed May 12, 2006

The request is **APPROVED**.

A grantable request to withdraw as attorney/agent of record must be signed by every attorney/agent seeking to withdraw or contain a clear indication that one attorney is signing on behalf of another/others. A request to withdraw will not be approved unless at least 30 (thirty) days would remain between the date of approval and the later of the expiration date of a time to file a response or the expiration date of the maximum time period which can be extended under 37 C.F.R. § 1.136(a).

The request was signed by Lara Dickey Lewis on behalf of all attorneys of record who are associated with customer No. 27526.

All attorneys/agents associated with the Customer Number 27526 have been withdrawn.

Applicant is reminded that there is no attorney of record at this time.

All future correspondence will be directed to the first named inventor Keith E. Pierce at the address indicated below.

The request to change the correspondence of record is not acceptable as the requested correspondence address is not that of: (1) the first named signing inventor; or (2) an intervening assignee of the entire interest under 37 C.F.R 3.71. All future communications from the Office will be directed to the first named signing inventor at the first copied address below until otherwise properly notified by the applicant.

In order to request or take action in a patent matter, the assignee must establish its ownership of the patent to the satisfaction of the Director. In this regard, a Statement under 37 CFR 3.73(b) must have either: (i) documentary evidence of a chain of title from the original owner to the assignee (*e.g.*, copy of an executed assignment), and a statement affirming that the documentary evidence of the chain of title from the original owner to the assignee was or concurrently is being submitted for recordation pursuant to § 3.11; or (ii) a statement specifying where documentary evidence of a chain of title from the original owner to the assignee is recorded in the assignment records of the Office (*e.g.*, reel and frame number).

Telephone inquiries concerning this decision should be directed to April Wise at 571-272-1642.

April M. Wise
Petitions Examiner
Office of Petitions

cc: Keith E. Pierce
3850 West 194th Street
Stilwell, KS 66085

cc: ICOP Digital, Inc.
16801West 116th Street
Lenxa, KS 66219

UNITED STATES PATENT AND TRADEMARK OFFICE

Commissioner for Patents
United States Patent and Trademark Office
P.O. Box 1450
Alexandria, VA 22313-1450
www.uspto.gov

Date Mailed : November 5, 2009

Serial no. : 10/926722
Patent No. :7,294,405 B2
Patent Issued :November 13, 2007
Inventor(s) : Paul J. Richter, et al.
Title : ANTIGLARE COATING AND ARTICLES

Re: Request for Certificate of Correction

Consideration has been given your request for the issuance of a certificate of correction for the above identified patent..

Respecting the alleged errors noted in your request, the change to the cover page is not approved because this word cannot be found in the location described.

In view of the foregoing your request in this matter is hereby denied.

A certificate of correction will issue for the remaining errors noted in your request.

Magdalene Talley
For Mary F. Diggs, Supervisor
Decision and Certificate
Of Correction Branch
(571)272-0423

Office of Intellectual Property Counsel
3M Innovative Properties CO.
3M Center-P.O. Box 33427
St. Paul, MN 55133-3427

MD/mt

UNITED STATES PATENT AND TRADEMARK OFFICE

Commissioner for Patents
United States Patent and Trademark Office
P.O. Box 1450
Alexandria, VA 22313-1450
www.uspto.gov

PHILIP S. JOHNSON
JOHNSON & JOHNSON
ONE JOHNSON & JOHNSON PLAZA
NEW BRUNSWICK NJ 08933-7003

COPY MAILED

AUG 3 0 2005

OFFICE OF PETITIONS

In re Application of	:	
Ansell, Scott F.	:	
Application No. 10/926,738	:	ON PETITION
Filed: August 26, 2004	:	
Attorney Docket No. VTN5064	:	

This is a decision on the petition under 37 C.F.R. § 1.137(b), filed July 26, 2005, to revive the above-identified application.

The petition is **GRANTED.**

The above-identified application became abandoned for failure to reply in a timely manner to the Notice to File Missing Parts of Application (Notice) mailed October 22, 2004. The Notice set a period for reply of two (2) months from the mail date of the Notice. No extensions of time under the provisions of 37 CFR 1.136(a) were obtained. Accordingly, the above-identified application became abandoned on December 23, 2004. A Notice of Abandonment was mailed on July 11, 2005.

Petitioner has met the requirements to revive the above-identified application pursuant to 37 CFR 1.137(b).

This matter is being referred to the Office of Initial Patent Examination for further processing.

Telephone inquiries regarding this decision should be directed to the undersigned at (571) 272-3282.

Liana Chase
Petitions Examiner
Office of Petitions
Office of the Deputy Commissioner
for Patent Examination Policy

UNITED STATES PATENT AND TRADEMARK OFFICE

UNITED STATES DEPARTMENT OF COMMERCE
United States Patent and Trademark Office
Address: COMMISSIONER FOR PATENTS
P.O. Box 1450
Alexandria, Virginia 22313-1450
www.uspto.gov

MICHAEL, BEST & FRIEDRICH LLP
100 EAST WISCONSIN AVENUE
SUITE 3300
MILWAUKEE, WI 53202

Mail Date: 04/21/2010

Applicant	: Jonathan A. Zick	: DECISION ON REQUEST FOR
Patent Number	: 7609027	: RECALCULATION of PATENT
Issue Date	: 10/27/2009	: TERM ADJUSTMENT IN VIEW
Appliction No	: 10/926,744	: OF WYETH AND NOTICE OF INTENT TO
Filed	: 08/26/2004	: ISSUE CERTIFICATE OF CORRECTION
		:

The Request for Recalculation is **GRANTED** to the extent indicated.

The patent term adjustment has been determined to be **186** days. The USPTO will *sua sponte* issue a certificate of correction reflecting the amount of PTA days determined by the recalculation.

Prior to the issuance of the certificate of correction, the USPTO will afford patentee an opportunity to be heard and request reconsideration. Accordingly, patentee has **one month or thirty (30) days**, whichever is longer, to file a request for reconsideration of this patent term adjustment calculation. See 35 U.S.C. 154(b)(3)(B)(ii) and 37 CFR 1.322(a)(4). No extensions of time will be granted under 37 CFR 1.136.

Patentee should use document code PET.OP if electronically filing a request for reconsideration of this patent term adjustment calculation. The patentee must also include the information required by 37 CFR 1.705(b)(2) and the fee required by 37 CFR 1.18(e). If patentee does not file a timely request for reconsideration of this patent term adjustment calculation including the information required by 37 CFR 1.705(b)(2) and the fee required by 37 CFR 1.18(e), the USPTO will issue a certificate of correction reflecting the PTA determination noted above.

Patentee should be aware that in order to preserve the right to review in the United States District Court for the District of Columbia of the USPTO patent term adjustment determination, patentee must ensure that he or she also take the steps required under 35 U.S.C. 154(b)(4)(A) in a timely manner. Nothing in the request for recalculation should be construed as providing an alternative time frame for commencing a civil action under 35 U.S.C. 154(b)(4)(A).

Any questions concerning this decision should be directed to the Office of Patent Legal Administration at 571-272-7702.

UNITED STATES PATENT AND TRADEMARK OFFICE

Commissioner for Patents
United States Patent and Trademark Office
P.O. Box 1450
Alexandria, VA 22313-1450
www.uspto.gov

BASF CATALYSTS LLC
100 CAMPUS DRIVE
FLORHAM PARK, NJ 07932

COPY MAILED

OCT 0 9 2008

OFFICE OF PETITIONS

In re Application of
Navin Patel, et. al.
Application No. 10/926,752
Filed: August 26, 2004
Attorney Docket No. 5026

DECISION ON PETITION

This is a decision on the petition under the unintentional provisions of 37 CFR 1.137(b), filed September 24, 2008, to revive the above-identified application.

The petition is **GRANTED**.

The application became abandoned for failure to reply in a timely manner to the Non-Final Rejection mailed, October 17, 2007, which set a shortened statutory period for reply of three (3) months. No extensions of time under the provisions of 37 CFR 1.136 (a) were obtained. Accordingly, the application became abandoned on January 18, 2007.

The petition satisfies the requirements of 37 CFR 1.137(b) in that petitioner has supplied (1) the reply in the form of an Amendment After Non-Final Rejection, (2) the petition fee of $1540, and (3) a proper statement of unintentional delay.

It is not apparent whether the statement of unintentional delay was signed by a person who would have been in a position of knowing that the entire delay in filing the required reply from the due date for the reply until the filing of a grantable petition pursuant to 37 CFR 1.137(b) was unintentional. Nevertheless, in accordance with 37 CFR 10.18, the statement is accepted as constituting a certification of unintentional delay. However, in the event that petitioner has no knowledge that the delay was unintentional, petitioner must make such an inquiry to ascertain that, in fact, the delay was unintentional. If petitioner discovers that the delay was intentional, petitioner must so notify the Office.

Telephone inquiries concerning this decision should be directed to Denise Williams at (571) 272-8930.

This application is being referred to Technology Center AU 1793 for appropriate action by the Examiner in the normal course of business on the reply received.

Brian Brown
Petitions Examiner
Office of Petitions

UNITED STATES PATENT AND TRADEMARK OFFICE

UNITED STATES DEPARTMENT OF COMMERCE
United States Patent and Trademark Office
Address: COMMISSIONER FOR PATENTS
P.O. Box 1450
Alexandria, Virginia 22313-1450
www.uspto.gov

MCANDREWS HELD & MALLOY, LTD
500 WEST MADISON STREET
SUITE 3400
CHICAGO, IL 60661

Mail Date: 05/10/2010

Applicant	: Yue Chen	: DECISION ON REQUEST FOR
Patent Number	: 7653204	: RECALCULATION of PATENT
Issue Date	: 01/26/2010	: TERM ADJUSTMENT IN VIEW
Application No	: 10/926,762	: OF WYETH AND NOTICE OF INTENT TO
Filed	: 08/26/2004	: ISSUE CERTIFICATE OF CORRECTION
		:

The Request for Recalculation is **GRANTED** to the extent indicated.

The patent term adjustment has been determined to be **1553** days. The USPTO will *sua sponte* issue a certificate of correction reflecting the amount of PTA days determined by the recalculation.

Prior to the issuance of the certificate of correction, the USPTO will afford patentee an opportunity to be heard and request reconsideration. Accordingly, patentee has **one month or thirty (30) days**, whichever is longer, to file a request for reconsideration of this patent term adjustment calculation. See 35 U.S.C. 154(b)(3)(B)(ii) and 37 CFR 1.322(a)(4). No extensions of time will be granted under 37 CFR 1.136.

Patentee should use document code PET.OP if electronically filing a request for reconsideration of this patent term adjustment calculation. The patentee must also include the information required by 37 CFR 1.705(b)(2) and the fee required by 37 CFR 1.18(e). If patentee does not file a timely request for reconsideration of this patent term adjustment calculation including the information required by 37 CFR 1.705(b)(2) and the fee required by 37 CFR 1.18(e), the USPTO will issue a certificate of correction reflecting the PTA determination noted above.

Patentee should be aware that in order to preserve the right to review in the United States District Court for the District of Columbia of the USPTO patent term adjustment determination, patentee must ensure that he or she also take the steps required under 35 U.S.C. 154(b)(4)(A) in a timely manner. Nothing in the request for recalculation should be construed as providing an alternative time frame for commencing a civil action under 35 U.S.C. 154(b)(4)(A).

Any questions concerning this decision should be directed to the Office of Patent Legal Administration at 571-272-7702.

UNITED STATES PATENT AND TRADEMARK OFFICE

UNITED STATES DEPARTMENT OF COMMERCE
United States Patent and Trademark Office
Address: COMMISSIONER FOR PATENTS
P.O. Box 1450
Alexandria, Virginia 22313-1450
www.uspto.gov

Warren A. Sklar
Renner, Otto, Boisselle & Sklar, LLP
19th Floor
1621 Euclid Avenue
Cleveland, OH 44115-2191

Mail Date: 04/21/2010

Applicant	: Martin A. Alpert	: DECISION ON REQUEST FOR
Patent Number	: 7604012	: RECALCULATION of PATENT
Issue Date	: 10/20/2009	: TERM ADJUSTMENT IN VIEW
Appliction No	: 10/926,765	: OF WYETH AND NOTICE OF INTENT TO
Filed	: 08/26/2004	: ISSUE CERTIFICATE OF CORRECTION
		:

The Request for Recalculation is **GRANTED** to the extent indicated.

The patent term adjustment has been determined to be **972** days. The USPTO will *sua sponte* issue a certificate of correction reflecting the amount of PTA days determined by the recalculation.

Prior to the issuance of the certificate of correction, the USPTO will afford patentee an opportunity to be heard and request reconsideration. Accordingly, patentee has **one month or thirty (30) days**, whichever is longer, to file a request for reconsideration of this patent term adjustment calculation. See 35 U.S.C. 154(b)(3)(B)(ii) and 37 CFR 1.322(a)(4). No extensions of time will be granted under 37 CFR 1.136.

Patentee should use document code PET.OP if electronically filing a request for reconsideration of this patent term adjustment calculation. The patentee must also include the information required by 37 CFR 1.705(b)(2) and the fee required by 37 CFR 1.18(e). If patentee does not file a timely request for reconsideration of this patent term adjustment calculation including the information required by 37 CFR 1.705(b)(2) and the fee required by 37 CFR 1.18(e), the USPTO will issue a certificate of correction reflecting the PTA determination noted above.

Patentee should be aware that in order to preserve the right to review in the United States District Court for the District of Columbia of the USPTO patent term adjustment determination, patentee must ensure that he or she also take the steps required under 35 U.S.C. 154(b)(4)(A) in a timely manner. Nothing in the request for recalculation should be construed as providing an alternative time frame for commencing a civil action under 35 U.S.C. 154(b)(4)(A).

Any questions concerning this decision should be directed to the Office of Patent Legal Administration at 571-272-7702.

UNITED STATES PATENT AND TRADEMARK OFFICE

Commissioner for Patents
United States Patent and Trademark Office
P.O. Box 1450
Alexandria, VA 22313-1450
www.uspto.gov

HARMAN - BRINKS HOFER CHICAGO
BRINKS, HOFER, GILSON & LIONE
P.O. BOX 10395
CHICAGO, IL 60610

COPY MAILED

JUL 2 7 2009

OFFICE OF PETITIONS

In re Application of :
Philipp Wohrle, et al. :
Application No. 10/926,767 : DECISION ON PETITION
Filed: August 26, 20048 : TO WITHDRAW
Attorney Docket No. 11336-775 (P04017US) : FROM RECORD

This is a decision on the Request to Withdraw as attorney or agent of record under 37 C.F.R. § 1.36(b), filed June 15, 2009.

The request is **NOT APPROVED**.

A grantable request to withdraw as attorney/agent of record must be signed by every attorney/agent seeking to withdraw or contain a clear indication that one attorney is signing on behalf of another/others

The request cannot be approved because the practitioner(s) requesting the withdrawal have not certified that they have (1) given reasonable notice to the client, prior to the expiration of the response period, that the practitioner(s) intend to withdraw from employment; (2) deliver to the client or duly authorized representative of the client papers and property (including funds) to which the client is entitled; and (3) notified the client of any responses that may be due and the time frame within which the client must respond. The failure to do so may subject the practitioner to discipline. It is also noted that false certification may violate a practitioners' duty under 37 CFR 10.23(b)(4) and (b)(5).

All future communications from the Office will continue to be directed to the above-listed address until otherwise notified by applicant.

Telephone inquiries concerning this decision should be directed to undersigned at 571-272-1642.

All other inquiries concerning the examination or status of this application should be directed to the Technology Center.

/AMW/
April M. Wise
Petitions Examiner
Office of Petitions

Attachment: Blank copy of PTOL/SB/83 Form

cc: ROBERT P. HART, ESQ.
HARMAN INTERNATIONAL INDUSTRIES, INCORPORATED
8500 BALBOA BOULEVARD
NORTHRIDGE, CA 91329

UNITED STATES PATENT AND TRADEMARK OFFICE

Commissioner for Patents
United States Patent and Trademark Office
P.O. Box 1450
Alexandria, VA 22313-1450
www.uspto.gov

BACHMAN & LAPOINTE, P.C.
900 CHAPEL STREET
SUITE 1201
NEW HAVEN CT 06510

COPY MAILED

JUL 18 2007

OFFICE OF PETITIONS

In re Application of	:	
Minor et al.	:	
Application No. 10/926,772	:	DECISION ON PETITION
Filed: August 26, 2004	:	
Attorney Docket No. 085.11113-US(04-308)	:	

This is a decision on the petition under the unintentional provisions of 37 CFR 1.137(b), filed May 1, 2007, to revive the above-identified application.

The petition is **GRANTED**.

This application became abandoned for failure to timely pay the issue and publication fees on or before March 28 2007, as required by the Notice of Allowance and Fee(s) Due, mailed December 28 2006. Accordingly, the date of abandonment of this application is March 29, 2007.

The petition satisfies the requirements of 37 CFR 1.137(b) in that petitioner has supplied (1) the reply in the form of payment of the issue fee of $1,400.00 and publication fee of $300.00, (2) the petition fee of $1,500.00; and (3) a proper statement of unintentional delay.

Telephone inquiries concerning this decision should be directed to Christopher Bottorff at (571) 272-6052 or in his absence, the undersigned at (571) 272-7099.

This application is being referred to Publishing Division for processing into a patent.

David Bucci
Petitions Examiner
Office of Petitions

UNITED STATES PATENT AND TRADEMARK OFFICE

Commissioner for Patents
United States Patent and Trademark Office
P.O. Box 1450
Alexandria, VA 22313-1450
www.uspto.gov
DIW Dec-06

LAURENCE A WEINBERGER
882 S. MATLACK ST.
SUITE 103
WEST CHESTER PA 19382

COPY MAILED
DEC 0 8 2006
OFFICE OF PETITIONS

In re Application of	:	
Abrahamian et al.	:	DECISION ON PETITION TO
Application No. 10/926,781	:	WITHDRAW HOLDING OF
Filed: 08/25/2004	:	ABANDONMENT
Attorney Docket No. 3017-71	:	

This is a decision on the petition filed on 30 August, 2006, to withdraw the holding of abandonment in the above-identified application.

The petition is **GRANTED**.

The application was held abandoned for failure to timely reply to the non-final Office action mailed on 21 October, 2005, which set a three (3)-month shorted statutory period for reply. Notice of Abandonment was mailed on 30 June, 2006.

Petitioners assert that the non-final Office action mailed on 21 October, 2005, was never received.

In the absence of any irregularity in the mailing of the final Office action, there is a strong presumption that the final Office action was properly mailed to practitioner at the address of record. This presumption may be overcome by a showing that the final Office action was not in fact received. The showing required to establish the failure to receive an Office communication must include a statement from the practitioner stating that the Office communication was not received by the practitioner and attesting to the fact that a search of the file jacket and docket records indicates that the Office action was not received. A copy of the docket record where the non-received Office action would have been entered had it been received and docketed must be attached to and referenced in practitioner's statement. See "Withdrawing the Holding of Abandonment When Office Actions Are Not Received" 1156 Official Gazette 53 (November 16, 1993) and M.P.E.P. § 711.03(c). The showing

outlined above may not be sufficient if there are circumstances that point to a conclusion that the final Office action may have been lost after receipt rather than a conclusion that the final Office action was lost in the mail.

A review of the record indicates that the Office action was properly mailed to the practitioner of record at the correspondence address of record at the time of mailing. Thus, there was no irregularity in mailing the Office action on the part of the United States Patent and Trademark Office.

In support, the petition includes a statement from the practitioner, Laurence A. Weinberger, stating that the Office communication was not received by the practicioner, and attesting to the fact that a search of the file jacket and counsel's calendaring system indicates that the Office action was not received. A copy of counsel's calendar page where the non-received Office action would have been entered had it been received and docketed is attached.

The petitioner has made a sufficient showing of nonreceipt of the Office action. Accordingly, the Notice of Abandonment is hereby vacated and the holding of abandonment withdrawn.

The petition is **GRANTED.**

It is noted that applicant has filed an amendment in reply to the Office action mailed on 21 October, 2005, with the present petition. As such the Office action will not be remailed.

As no petition fee is due, the fee submitted with the petition will be refunded to counsel.

The application file is being referred to Technology Center Art Unit 2857 for consideration of the reply filed with the present petition.

Telephone inquiries concerning this matter may be directed to the undersigned at (571)272-3231.

DWood

Douglas I. Wood
Senior Petitions Attorney
Office of Petitions

UNITED STATES PATENT AND TRADEMARK OFFICE

Commissioner for Patents
United States Patent and Trademark Office
P.O. Box 1450
Alexandria, VA 22313-1450
www.uspto.gov

SCHWEGMAN, LUNDBERG,
WOESSNER & KLUTH, P.A.
P.O. BOX 2938
MINNEAPOLIS MN 55402

COPY MAILED

JAN 0 5 2007

OFFICE OF PETITIONS

In re Application of	:	
Kinley et al.	:	
Application No. 10/926783	:	DECISION
Filing or 371(c) Date: 08/26/2004	:	ON PETITION
Patent No.: 7101691	:	
Issue Date: 09/05/2006	:	
Attorney Docket No.	:	
1927.001US1	:	

This is a decision on the correspondence entitled "Request Under 37 C.F.R. § 3.81(b)", filed November 6, 2006, requesting a change in the name of the assignee after payment of the issue fee.

The Petition is **granted**.

Telephone inquiries concerning this matter should be directed to the undersigned at (571) 272-3232. Any questions concerning the issuance of the Certificate of Correction should be directed to the Certificate of Correction Branch at (703) 305-8309.

The application is being referred to the Certificate of Corrections Branch for issuance of the requested Certificate of Correction.

Derek L. Woods
Attorney
Office of Petitions

UNITED STATES PATENT AND TRADEMARK OFFICE

Commissioner for Patents
United States Patent and Trademark Office
P.O. Box 1450
Alexandria, VA 22313-1450
www.uspto.gov

SCHWEGMAN, LUNDBERG,
WOESSNER & KLUTH, P.A.
P.O. BOX 2938
MINNEAPOLIS MN 55402

COPY MAILED

JAN 0 5 2007

OFFICE OF PETITIONS

In re Application of	:	
Kinley et al.	:	
Application No. 10/926783	:	DECISION
Filing or 371(c) Date: 08/26/2004	:	ON PETITION
Patent No.: 7101691	:	
Issue Date: 09/05/2006	:	
Attorney Docket No.	:	
1927.001US1	:	

This is a decision on the "Request Under 37 C.F.R. § 1.182 – Expedited Processing of Request Under 3.81(b)", filed December 12, 2006.

This Petition is hereby **granted**.

A Decision on the Petition under 37 CFR 3.81(b) is being mailed on even date herewith.

Telephone inquiries concerning this matter should be directed to the undersigned at (571) 272-3232.

Derek L. Woods
Attorney
Office of Petitions

UNITED STATES PATENT AND TRADEMARK OFFICE

Commissioner for Patents
United States Patent and Trademark Office
P.O. Box 1450
Alexandria, VA 22313-1450
www.uspto.gov

FISH & RICHARDSON, PC
P.O. BOX 1022
MINNEAPOLIS MN 55440-1022

COPY MAILED

JUN 1 1 2007

OFFICE OF PETITIONS

In re Application of	:	
WAUPOTITSCH, Roman et al.	:	
Application No. 10/926,788	:	DECISION ON PETITION
Filed: August 25, 2004	:	TO WITHDRAW
Attorney Docket No. **14873-004001**	:	FROM RECORD
	:	

This is a decision on the Request to Withdraw as attorney or agent of record under 37 C.F.R. § 1.36(b), filed March 19, 2007.

The request is **APPROVED.**

A grantable request to withdraw as attorney/agent of record must be signed by every attorney/agent seeking to withdraw or contain a clear indication that one attorney is signing on behalf of another/others. A request to withdraw will not be approved unless at least 30 (thirty) days would remain between the date of approval and the later of the expiration date of a time to file a response or the expiration date of the maximum time period which can be extended under 37 C.F.R. § 1.136(a).

The request was signed by Scott C. Harris on behalf of all attorneys of record who are associated. All attorneys/agents associated have been withdrawn. Applicant is reminded that there is no attorney of record at this time.

The request to change the correspondence of record is not acceptable as the requested correspondence address is not that of: (1) the first named signing inventor; or (2) an intervening assignee of the entire interest under 37 C.F.R 3.71. All future communications from the Office will be directed to the first named signing inventor at the first copied address below until otherwise properly notified by the applicant.

Telephone inquiries concerning this decision should be directed to Tredelle Jackson at 571-272-2783.

Monica A. Graves
Petitions Examiner
Office of Petitions

cc: **ROMAN WAUPOTITSCH**
82 CANADA DEL RANCHO
SANTA FE, NM 87508

cc: **DAVID WEST**
GEOMETRIX
1590 THE ALAMEDA
SAN JOSE, CA 95126

UNITED STATES PATENT AND TRADEMARK OFFICE

UNITED STATES DEPARTMENT OF COMMERCE
United States Patent and Trademark Office
Address: COMMISSIONER FOR PATENTS
P.O. Box 1450
Alexandria, Virginia 22313-1450
www.uspto.gov

MCANDREWS HELD & MALLOY, LTD
500 WEST MADISON STREET
SUITE 3400
CHICAGO, IL 60661

Mail Date: 05/10/2010

Applicant	: Charles Abraham	: DECISION ON REQUEST FOR
Patent Number	: 7656350	: RECALCULATION of PATENT
Issue Date	: 02/02/2010	: TERM ADJUSTMENT IN VIEW
Application No	: 10/926,792	: OF WYETH AND NOTICE OF INTENT TO
Filed	: 08/26/2004	: ISSUE CERTIFICATE OF CORRECTION
		:

The Request for Recalculation is **GRANTED** to the extent indicated.

The patent term adjustment has been determined to be **212** days. The USPTO will *sua sponte* issue a certificate of correction reflecting the amount of PTA days determined by the recalculation.

Prior to the issuance of the certificate of correction, the USPTO will afford patentee an opportunity to be heard and request reconsideration. Accordingly, patentee has **one month or thirty (30) days**, whichever is longer, to file a request for reconsideration of this patent term adjustment calculation. See 35 U.S.C. 154(b)(3)(B)(ii) and 37 CFR 1.322(a)(4). No extensions of time will be granted under 37 CFR 1.136.

Patentee should use document code PET.OP if electronically filing a request for reconsideration of this patent term adjustment calculation. The patentee must also include the information required by 37 CFR 1.705(b)(2) and the fee required by 37 CFR 1.18(e). If patentee does not file a timely request for reconsideration of this patent term adjustment calculation including the information required by 37 CFR 1.705(b)(2) and the fee required by 37 CFR 1.18(e), the USPTO will issue a certificate of correction reflecting the PTA determination noted above.

Patentee should be aware that in order to preserve the right to review in the United States District Court for the District of Columbia of the USPTO patent term adjustment determination, patentee must ensure that he or she also take the steps required under 35 U.S.C. 154(b)(4)(A) in a timely manner. Nothing in the request for recalculation should be construed as providing an alternative time frame for commencing a civil action under 35 U.S.C. 154(b)(4)(A).

Any questions concerning this decision should be directed to the Office of Patent Legal Administration at 571-272-7702.

UNITED STATES PATENT AND TRADEMARK OFFICE

Commissioner for Patents
United States Patent and Trademark Office
P.O. Box 1450
Alexandria, VA 22313-1450
www.uspto.gov

Bever Hoffman & Harms, LLP
Tri-Valley Office
1432 Concannon Blvd., Bldg. G
Livermore, CA 94550

COPY MAILED

MAY 1 0 2005

OFFICE OF PETITIONS

In re Application of	:	
Zhao and Lindahl	:	DECISION ACCORDING STATUS
Application No. 10/926,795	:	UNDER 37 CFR 1.47(a)
Filed: August 25, 2004	:	
Attorney Docket No. IDT-1710	:	

This is in response to the petition under 37 CFR 1.47(a), filed March 14, 2005.[1]

The petition is granted.

Applicants have shown that Craig A. Lindahl, the non-signing inventor, has refused to join in the filing of the above-identified application after having been presented with the application papers. Specifically, Christopher Novak, attorney for applicants, stated that Mr. Lindahl expressly refused to join the application and to sign the declaration provided to him with a copy of the patent application.

The above-identified application and papers have been reviewed and found in compliance with 37 CFR 1.47(a). This application is hereby accorded Rule 1.47(a) status. As provided in Rule 1.47(c), this Office will forward notice of this application's filing to the non-signing inventor at the address given in the declaration.[2] Notice of the filing of this application will also be published in the Official Gazette.

This matter is being referred to Technology Center Art Unit 2661 for further processing.

---

[1] Applicants obtained a three-month extension of time to reply. Accordingly, the petition is filed timely.

[2] The Office is construing the address provided in the declaration as Mr. Lindahl's last known address. If this is an incorrect interpretation, applicants should contact the undersigned Petitions Attorney.

Telephone inquiries regarding this decision should be directed to the undersigned at (571) 272-3211.

Christina Tartera Donnell

Christina Tartera Donnell
Senior Petitions Attorney
Office of Petitions

UNITED STATES PATENT AND TRADEMARK OFFICE

Commissioner for Patents
United States Patent and Trademark Office
P.O. Box 1450
Alexandria, VA 22313-1450
www.uspto.gov

COPY MAILED

AUG 0 2 2007

OFFICE OF PETITIONS

ROSSI, KIMMS & McDOWELL LLP.
P.O. BOX 826
ASHBURN VA 20146-0826

In re Application of
Katsumichi Ueyanagi, et al.
Application No. 10/926,797
Filed: August 26, 2004
Attorney Docket No. FUJI:316

ON PETITION

This is a decision on the petition under the unintentional provisions of 37 CFR 1.137(b), filed April 9, 2007, to revive the above-identified application.

The petition is **GRANTED**.

The application became abandoned for failure to timely file a reply within the meaning of 37 CFR 1.113 to the final Office action of May 2, 2006. The proposed reply required for consideration of a petition to revive must be a Notice of Appeal (and appeal fee required by 37 CFR 41.20(b)(2), an amendment that *prima facie* places the application in condition for allowance, a Request for Continued Examination and submission (37 CFR 1.114), or the filing of a continuing application under 37 CFR 1.53(b). See MPEP 711.03(c)(II)(A)(2). A three-month extension of time pursuant to the provisions of 37 CFR 1.136(a) was obtained. Accordingly, the date of abandonment of this application is November 3, 2006.

The petition satisfies the requirements of 37 CFR 1.137(b) in that petitioner has supplied (1) the reply in the form of a previously filed Request for Continued Examination (RCE) dated December 5, 2006 (certificate of mail of November 2, 2006) and fee of $790, and the submission required by 37 CFR 1.114; (2) the petition fee of $1500; and (3) a proper statement of unintentional delay.

Telephone inquiries concerning this decision should be directed to the April Wise at (571) 272-1642.

This application is being referred to Technology Center AU 2855 for processing of the RCE and for appropriate action by the Examiner in the normal course of business on the amendment submitted in accordance with 37 CFR 1.114.

Irvin Dingle
Petitions Examiner
Office of Petitions

UNITED STATES PATENT AND TRADEMARK OFFICE

Commissioner for Patents
United States Patent and Trademark Office
P.O. Box 1450
Alexandria, VA 22313-1450
www.uspto.gov

Patent No. : 7,130,500 B2
Ser. No. :10/926,809
Inventor(s) : Wachsman, et. al.
Issued : October 31, 2006
Title : RECONFIGUARABLE OPTICAL ADD-DROP MULTIPLEXER
Docket No. : 15436.247.43.1.1.

Re: Request for Certificate of Correction

Consideration has been given your request for the issuance of a certificate of correction for the above-identified patent under the provisions of Rule(s) 1.322.

The change to column 12, line 7 is not approved. "512" was used to designate an optical input (fig. 10C, column 10 lines 36-37), not an optical signal. '512" designates an optical signal as shown in fig. 10B (note paragraph spanning columns 10-11).

In view of the foregoing, your request in this matter is hereby denied.

A certificate of correction will issue to correct the remaining error noted in your request.

Eva James
For Mary Diggs
Decisions & Certificates
of Correction Branch
(703) **308-9390 ext. 124** or 125

Eric L. Maschoff
Workman Nydegger
1000 Eagle Gate Tower
60 East south Temple
Salt Lake City, Utah 84111

ej

6-10-2010

UNITED STATES DEPARTMENT OF COMMERCE
Patent and Trademark Office
ASSISTANT SECRETARY OF COMMERCE AND
COMMISSIONER OF PATENTS AND TRADEMARKS
Washington, D.C. 20231

Patent No. : 7,130,500 B2
Inventor(s) : Wachsman, et. al.
Issued : October 31, 2006
Application No: 10/926,806

Re. Request for Certificate of Correction

Consideration has been given your request under the provisions of Rule 1.323.
The change to column 12, line 7 is not approved. "512" was used to designate an optical input (fig. 10C, column 10 lines 36-37), not an optical signal. "521" designates an optical signal as shown in fig. 10B (note paragraph spanning columns 10-11).

In view of the foregoing, your request in this matter is hereby denied.

Further correspondence concerning this matter, should be directed to:

U.S. Patent and Trademark Office
Washington, DC 20231
Attn: Decisions & Certificates of Correction Branch

Eva James
For Mary Diggs
Decisions & Certificate
of Correction Branch
(703) 305- 756-1583 or 1580

Eric L. Maschoff, Workman Nydegger
1000 Eagle Gate Tower
60 East South Temple
Salt Lake City, Utah 84111

ej

SPE RESPONSE FOR CERTIFICATE OF CORRECTION

Paper No.:20081021

DATE : October 22, 2008

TO SPE OF : ART UNIT 2874

SUBJECT : Request for Certificate of Correction on Patent No.: 7130500

A response is requested with respect to the accompanying request for a certificate of correction.

Please complete this form and return with file, within **7** days to:
Certificates of Correction Branch - ST (South Tower) 9A22
Palm location **7590** - Tel. No. (703) 305-8309

With respect to the change(s) requested, correcting Office and/or Applicant's errors, should the patent read as shown in the certificate of correction? No new matter should be introduced, nor should the scope or meaning of the claims be changed.

Thank You For Your Assistance **Certificates of Correction Branch**

The request for issuing the above-identified correction(s) is hereby:

Note your decision on the appropriated box.

☐ **Approved** All changes apply.

☒ **Approved in Part** Specify below which changes **do not** apply.

☐ **Denied** State the reasons for denial below.

Comments:

The change to column 12, line 7 is not approved. "512" was used to designate an optical input (fig. 10C, column 10 lines 36-37), not an optical signal. "521" designates an optical signal as shown in fig. 10B (note paragraph spanning columns 10-11).

Ulehaule AU 2874

UNITED STATES PATENT AND TRADEMARK OFFICE

UNITED STATES DEPARTMENT OF COMMERCE
United States Patent and Trademark Office
Address: COMMISSIONER FOR PATENTS
P.O. Box 1450
Alexandria, Virginia 22313-1450
www.uspto.gov

AT&T Legal Department - JW
Attn: Patent Docketing
Room 2A-207
One AT&T Way
Bedminster, NJ 07921

Mail Date: 05/06/2010

Applicant	: Robert R. Bushey	: DECISION ON REQUEST FOR
Patent Number	: 7623632	: RECALCULATION of PATENT
Issue Date	: 11/24/2009	: TERM ADJUSTMENT IN VIEW
Application No	: 10/926,813	: OF WYETH AND NOTICE OF INTENT TO
Filed	: 08/26/2004	: ISSUE CERTIFICATE OF CORRECTION
		:

The Request for Recalculation is **GRANTED** to the extent indicated.

The patent term adjustment has been determined to be **1490** days. The USPTO will *sua sponte* issue a certificate of correction reflecting the amount of PTA days determined by the recalculation.

Prior to the issuance of the certificate of correction, the USPTO will afford patentee an opportunity to be heard and request reconsideration. Accordingly, patentee has **one month or thirty (30) days**, whichever is longer, to file a request for reconsideration of this patent term adjustment calculation. See 35 U.S.C. 154(b)(3)(B)(ii) and 37 CFR 1.322(a)(4). No extensions of time will be granted under 37 CFR 1.136.

Patentee should use document code PET.OP if electronically filing a request for reconsideration of this patent term adjustment calculation. The patentee must also include the information required by 37 CFR 1.705(b)(2) and the fee required by 37 CFR 1.18(e). If patentee does not file a timely request for reconsideration of this patent term adjustment calculation including the information required by 37 CFR 1.705(b)(2) and the fee required by 37 CFR 1.18(e), the USPTO will issue a certificate of correction reflecting the PTA determination noted above.

Patentee should be aware that in order to preserve the right to review in the United States District Court for the District of Columbia of the USPTO patent term adjustment determination, patentee must ensure that he or she also take the steps required under 35 U.S.C. 154(b)(4)(A) in a timely manner. Nothing in the request for recalculation should be construed as providing an alternative time frame for commencing a civil action under 35 U.S.C. 154(b)(4)(A).

Any questions concerning this decision should be directed to the Office of Patent Legal Administration at 571-272-7702.

UNITED STATES PATENT AND TRADEMARK OFFICE

Commissioner for Patents
United States Patent and Trademark Office
P.O. Box 1450
Alexandria, VA 22313-1450
www.uspto.gov

COPY MAILED

MAY 02 2007

OFFICE OF PETITIONS

CHARLES G. CALL
68 HORSE POND ROAD
WEST YARMOUTH MA 02673-2516

In re Application of	:	
Joseph A. Paradiso, et al.	:	
Application No. 10/926,814	:	DECISION ON PETITION
Filed: August 26, 2004	:	
Attorney Docket No. E-24	:	

This is a decision on the petition under the unintentional provisions of 37 CFR 1.137(b), filed December 6, 2006, to revive the above-identified application.

The petition is **GRANTED**.

The application became abandoned for failure to reply in a timely manner to the non-final Office action mailed, May 17, 2006, which set a shortened statutory period for reply of three (3) months. No extensions of time under the provisions of 37 CFR 1.136(a) were obtained. Accordingly, the application became abandoned on August 18, 2006.

The petition satisfies the requirements of 37 CFR 1.137(b) in that petitioner has supplied (1) the reply in the form of an amendment, (2) the petition fee of $1500; and (3) a proper statement of unintentional delay.

Telephone inquiries concerning this decision should be directed to April Wise at 571-272-1642.

This application is being referred to Technology Center AU 2612 for appropriate action by the Examiner in the normal course of business on the reply received December 6, 2006.

Irvin Dingle
Petitions Examiner
Office of Petitions

UNITED STATES PATENT AND TRADEMARK OFFICE

Commissioner for Patents
United States Patent and Trademark Office
P.O. Box 1450
Alexandria, VA 22313-1450
www.uspto.gov

Charles G. Call
20 EAST GOETHE STREET
CH1
CHICAGO IL 60610-2368

COPY MAILED

AUG 2 9 2008

OFFICE OF PETITIONS

In re Application of	:	
Paradiso et al.	:	
Application No. 10/926,814	:	DECISION ON PETITION
Filed: August 26, 2004	:	
Attorney Docket No. E-24	:	

This is a decision on the petition under the unintentional provisions of 37 CFR 1.137(b), filed July 24, 2008, to revive the above-identified application.

The petition is **GRANTED**.

This application became abandoned for failure to timely pay the issue and publication fees on or before December 10, 2007, as required by the Notice of Allowance and Fee(s) Due, mailed September 10, 2007. Accordingly, the date of abandonment of this application is December 11, 2007.

The petition satisfies the requirements of 37 CFR 1.137(b) in that petitioner has supplied (1) the reply in the form of payment of the issue fee of $1440.00 and the publication fee of $300.00, (2) the petition fee of $1540.00; and (3) a proper statement of unintentional delay.

Telephone inquiries concerning this decision should be directed to the undersigned at (571) 272-3215.

This application is being referred to the Office of Data Management for processing into a patent.

Charlema Grant

Charlema Grant
Petitions Attorney
Office of Petitions

UNITED STATES PATENT AND TRADEMARK OFFICE

UNITED STATES DEPARTMENT OF COMMERCE
United States Patent and Trademark Office
Address: COMMISSIONER FOR PATENTS
P.O. Box 1450
Alexandria, Virginia 22313-1450
www.uspto.gov

GARLICK, HARRISON & MARKISON (ALU)
P.O. BOX 160727
AUSTIN, TX 78716-0727

Mail Date: 07/15/2010

Applicant	: Hakki C. Cankaya	: DECISION ON REQUEST FOR
Patent Number	: 7646730	: RECALCULATION of PATENT
Issue Date	: 01/12/2010	: TERM ADJUSTMENT IN VIEW
Application No	: 10/926,818	: OF WYETH AND NOTICE OF INTENT TO
Filed	: 08/26/2004	: ISSUE CERTIFICATE OF CORRECTION
		:

The Request for Recalculation is **GRANTED** to the extent indicated.

The patent term adjustment has been determined to be **1486** days. The USPTO will *sua sponte* issue a certificate of correction reflecting the amount of PTA days determined by the recalculation.

Prior to the issuance of the certificate of correction, the USPTO will afford patentee an opportunity to be heard and request reconsideration. Accordingly, patentee has **one month or thirty (30) days**, whichever is longer, to file a request for reconsideration of this patent term adjustment calculation. See 35 U.S.C. 154(b)(3)(B)(ii) and 37 CFR 1.322(a)(4). No extensions of time will be granted under 37 CFR 1.136.

Patentee should use document code PET.OP if electronically filing a request for reconsideration of this patent term adjustment calculation. The patentee must also include the information required by 37 CFR 1.705(b)(2) and the fee required by 37 CFR 1.18(e). If patentee does not file a timely request for reconsideration of this patent term adjustment calculation including the information required by 37 CFR 1.705(b)(2) and the fee required by 37 CFR 1.18(e), the USPTO will issue a certificate of correction reflecting the PTA determination noted above.

Patentee should be aware that in order to preserve the right to review in the United States District Court for the District of Columbia of the USPTO patent term adjustment determination, patentee must ensure that he or she also take the steps required under 35 U.S.C. 154(b)(4)(A) in a timely manner. Nothing in the request for recalculation should be construed as providing an alternative time frame for commencing a civil action under 35 U.S.C. 154(b)(4)(A).

Any questions concerning this decision should be directed to the Office of Patent Legal Administration at 571-272-7702.

SPE RESPONSE FOR CERTIFICATE OF CORRECTION

Paper No.:20100412

DATE : April 12, 2010

TO SPE OF : ART UNIT 2617

SUBJECT : Request for Certificate of Correction on Patent No.: 7,231,221

A response is requested with respect to the accompanying request for a certificate of correction.

Please complete this form and return with file, within **7** days to:
Certificates of Correction Branch - ST (South Tower) 9A22
Palm location **7590** - Tel. No. (703) 305-8309

With respect to the change(s) requested, correcting Office and/or Applicant's errors, should the patent read as shown in the certificate of correction? No new matter should be introduced, nor should the scope or meaning of the claims be changed.

Thank You For Your Assistance **Certificates of Correction Branch**

The request for issuing the above-identified correction(s) is hereby:

Note your decision on the appropriated box.

☒ **Approved** All changes apply.

☐ **Approved in Part** Specify below which changes **do not** apply.

☐ **Denied** State the reasons for denial below.

Comments:

It appears as though the additional language to patented claim 11 was a result of Office error. The additional language was not in the allowed claim.

/Dwayne Bost/
Supervisory Patent Examiner.Art Unit 2617

UNITED STATES PATENT AND TRADEMARK OFFICE

UNITED STATES DEPARTMENT OF COMMERCE
United States Patent and Trademark Office
Address: COMMISSIONER FOR PATENTS
P.O. Box 1450
Alexandria, Virginia 22313-1450
www.uspto.gov

KENYON & KENYON LLP
RIVERPARK TOWERS, SUITE 600
333 W. SAN CARLOS ST.
SAN JOSE, CA 95110

Mail Date: 04/21/2010

Applicant	: Naoto Matono	: DECISION ON REQUEST FOR
Patent Number	: 7583472	: RECALCULATION of PATENT
Issue Date	: 09/01/2009	: TERM ADJUSTMENT IN VIEW
Appliction No	: 10/926,895	: OF WYETH AND NOTICE OF INTENT TO
Filed	: 08/25/2004	: ISSUE CERTIFICATE OF CORRECTION
		:

The Request for Recalculation is **GRANTED** to the extent indicated.

The patent term adjustment has been determined to be **469** days. The USPTO will *sua sponte* issue a certificate of correction reflecting the amount of PTA days determined by the recalculation.

Prior to the issuance of the certificate of correction, the USPTO will afford patentee an opportunity to be heard and request reconsideration. Accordingly, patentee has **one month or thirty (30) days**, whichever is longer, to file a request for reconsideration of this patent term adjustment calculation. See 35 U.S.C. 154(b)(3)(B)(ii) and 37 CFR 1.322(a)(4). No extensions of time will be granted under 37 CFR 1.136.

Patentee should use document code PET.OP if electronically filing a request for reconsideration of this patent term adjustment calculation. The patentee must also include the information required by 37 CFR 1.705(b)(2) and the fee required by 37 CFR 1.18(e). If patentee does not file a timely request for reconsideration of this patent term adjustment calculation including the information required by 37 CFR 1.705(b)(2) and the fee required by 37 CFR 1.18(e), the USPTO will issue a certificate of correction reflecting the PTA determination noted above.

Patentee should be aware that in order to preserve the right to review in the United States District Court for the District of Columbia of the USPTO patent term adjustment determination, patentee must ensure that he or she also take the steps required under 35 U.S.C. 154(b)(4)(A) in a timely manner. Nothing in the request for recalculation should be construed as providing an alternative time frame for commencing a civil action under 35 U.S.C. 154(b)(4)(A).

Any questions concerning this decision should be directed to the Office of Patent Legal Administration at 571-272-7702.

UNITED STATES PATENT AND TRADEMARK OFFICE

Commissioner for Patents
United States Patent and Trademark Office
P.O. Box 1450
Alexandria, VA 22313-1450
www.uspto.gov

Glenn D. Bellamy
Greenbaum, Doll & McDonald, PLLC
3500 National City Tower
101 South Fifth Street
Louisville, KY 40202

COPY MAILED

MAY 09 2007

OFFICE OF PETITIONS

In re Application of	:	
William R. Nelson	:	
Application No. 10/926,905	:	DECISION ON PETITION
Filed: August 26, 2004	:	TO WITHDRAW
Attorney Docket No. 110993.1	:	FROM RECORD
	:	

This is a decision on the Request to Withdraw as attorney or agent of record under 37 C.F.R § 1.36(b), filed February 21, 2007.

The request is **APPROVED**.

A grantable request to withdraw as attorney/agent of record must be signed by every attorney/agent seeking to withdraw or contain a clear indication that one attorney is signing on behalf of another/others. A request to withdraw will not be approved unless at least 30 (thirty) days would remain between the date of approval and the later of the expiration date of a time to file a response or the expiration date of the maximum time period which can be extended under 37 C.F.R. § 1.136(a).

The request was signed by Glenn D. Bellamy on behalf of all attorneys of record who are associated with customer No. 23828. All attorneys/agents associated with the Customer Number 23828 have been withdrawn.

The correspondence address of record has been changed since it is that of the CEO, of e-FoodSafety.com, an assignee who has properly intervened in this application. It is further noted that there is no attorney of record.

A final rejection was mailed on February 20, 2007. Failure to timely reply will result in the abandonment of this application.

Telephone inquiries concerning this decision should be directed to Kimberly Inabinet at 571-272-4618.

Frances Hicks
Petitions Examiner
Office of Petitions

cc: Mark Taggatz
P.O. Box 580490
North Palm Springs, CA 92258

UNITED STATES PATENT AND TRADEMARK OFFICE

Commissioner for Patents
United States Patent and Trademark Office
P.O. Box 1450
Alexandria, VA 22313-1450
www.uspto.gov

FITZPATRICK CELLA (MARVELL)
30 ROCKEFELLER PLAZA
NEW YORK, NY 10112-3800

MAILED

MAR 13 2009

OFFICE OF PETITIONS

In re Application of	:	
Tal Anker, et al.	:	
Application No. 10/926,946	:	DECISION ON PETITION
Filed: August 27, 2004	:	TO WITHDRAW
Attorney Docket No. MP0442.C1-166157	:	FROM RECORD
	:	

This is a decision on the Request to Withdraw as attorney or agent of record under 37 C.F.R. § 1.36(b), filed October 31, 2008.

The request is **DISMISSED** as moot.

A review of the file record indicates that the power of attorney to Fitzpatrick Cella (Marvell) has been revoked by the assignee of the patent application on November 4, 2008. Accordingly, the request to withdraw under 37 C.F.R. § 1.36(b) is moot.

All future communications from the Office will continue to be directed to the below-listed address until otherwise notified by applicant.

Telephone inquires concerning this decision should be directed to undersigned at 571-272-1642.

/AMW/
April M. Wise
Petitions Examiner
Office of Petitions

cc: MARVELL PATENT DEPARTMENT
C/O KEVIN VIVIAN
5488 MARVELL LANE
SANTA CLARA, CA 95054

UNITED STATES PATENT AND TRADEMARK OFFICE

COMMISSIONER FOR PATENTS
UNITED STATES PATENT AND TRADEMARK OFFICE
P.O. BOX 1450
ALEXANDRIA, VA 22313-1450
WWW.USPTO.GOV

Paper No. None

SUNIL K. AHUJA
27 RIO VISTA DRIVE
ALPINE NJ 07620

COPY MAILED
SEP 1 1 2006
OFFICE OF PETITIONS

In re Application of :
Gurbakhash Singh et al. :
Application No. 10/926,960 : DECISION ON PETITION
Filed: August 27, 2004 : UNDER 37 C.F.R. §1.181
Title: VEHICLE-MOUNTED HYDRO- :
ELECTRIC JACK SYSTEM :

This is a decision on the petition filed on July 25, 2006, pursuant to 37 C.F.R. §1.181, requesting that the holding of abandonment in the above-identified application be withdrawn.

BACKGROUND

The above-identified application became abandoned for failure to reply in a timely manner to the non-final Office action, mailed October 17, 2005, which set a shortened statutory period for reply of three months. No response was received, and no extensions of time under the provisions of 37 C.F.R. §1.136(a) were requested. Accordingly, the above-identified application became abandoned on January 18, 2006. A notice of abandonment was mailed on July 19, 2006.

RELEVANT PORTION OF THE MPEP

MPEP 711.03(c) states, *in pertinent part*:

PETITION TO WITHDRAW HOLDING OF ABANDONMENT BASED ON FAILURE TO RECEIVE OFFICE ACTION

In Delgar v. Schulyer, 172 USPQ 513 (D.D.C. 1971), the court decided that the Office should mail a new Notice of Allowance in view of the evidence presented in support of the contention that the applicant's representative did not receive the original Notice of Allowance. Under the reasoning of

Delgar, an allegation that an Office action was never received may be considered in a petition to withdraw the holding of abandonment. If adequately supported, the Office may grant the petition to withdraw the holding of abandonment and remail the Office action. That is, the reasoning of Delgar is applicable regardless of whether an application is held abandoned for failure to timely pay the issue fee (35 U.S.C. 151) or for failure to prosecute (35 U.S.C. 133).

To minimize costs and burdens to practitioners and the Office, the Office has modified the showing required to establish nonreceipt of an Office action. The showing required to establish nonreceipt of an Office communication must include a statement from the practitioner stating that the Office communication was not received by the practitioner and attesting to the fact that a search of the file jacket and docket records indicates that the Office communication was not received. A copy of the docket record where the nonreceived Office communication would have been entered had it been received and docketed must be attached to and referenced in practitioner's statement. For example, if a three month period for reply was set in the nonreceived Office action, a copy of the docket report showing all replies docketed for a date three months from the mail date of the nonreceived Office action must be submitted as documentary proof of nonreceipt of the Office action. See Notice entitled "Withdrawing the Holding of Abandonment When Office Actions Are Not Received," 1156 O.G. 53 (November 16, 1993).

The showing outlined above may not be sufficient if there are circumstances that point to a conclusion that the Office action may have been lost after receipt rather than a conclusion that the Office action was lost in the mail (e.g., if the practitioner has a history of not receiving Office actions).

Evidence of nonreceipt of an Office communication or action (e.g., Notice of Abandonment or an advisory action) other than that action to which reply was required to avoid abandonment would not warrant withdrawal of the holding of abandonment. Abandonment takes place by operation of law for failure to reply to an Office action or timely pay the issue fee, not by operation of the mailing of a Notice of Abandonment. See Lorenz v. Finkl, 333 F.2d 885, 889-90, 142 USPQ 26, 29-30 (CCPA 1964); Krahn v. Commissioner, 15 USPQ2d 1823, 1824 (E.D. Va 1990); In re Application of Fischer, 6 USPQ2d 1573, 1574 (Comm'r Pat. 1988).

Two additional procedures are available for reviving an application that has become abandoned due to a failure to reply to an Office Action: (1) a petition under 37 CFR 1.137(a) based upon unavoidable delay; and (2) a petition under 37 CFR 1.137(b) based on unintentional delay.

ANALYSIS

The showing in the instant petition is not sufficient to withdraw the holding of abandonment. Petitioner has stated that the Office communication was not received and has included a copy of the docket record where the nonreceived Office communication would have been entered had it been received and docketed. However, Petitioner has failed to attest to the fact that a search of the file jacket and docket records indicates that the Office communication was not received.

As such, Petitioner has not established non-receipt of the communication.

CONCLUSION

As such, the petition must be **DISMISSED**.

Any reply must be submitted within **TWO (2) MONTHS** from the mail date of this decision. Extensions of time under 37 C.F.R. §1.136(a) are permitted. The reply should include a cover letter entitled "Renewed Petition Under 37 C.F.R. 1.181(a)." This is not a final agency action within the meaning of 5 U.S.C 704.

The renewed petition should indicate in a prominent manner that the attorney handling this matter is Paul Shanoski, and may be submitted by mail[1], hand-delivery[2], or facsimile[3].

Telephone inquiries regarding *this decision* should be directed to the undersigned at (571) 272-3225[4]. All other inquiries concerning examination procedures or status of the application should be directed to the Technology Center.

Paul Shanoski
Senior Attorney
Office of Petitions
United States Patent and Trademark Office

---

1 Mail Stop Petition, Commissioner for Patents, United States Patent and Trademark Office, P.O. Box 1450, Alexandria, VA, 22313-1450.
2 Customer Window, Randolph Building, 401 Dulaney Street, Alexandria, VA, 22314.
3 (571) 273-8300- please note this is a central facsimile number.
4 Petitioner will note that all practice before the Office should be in writing, and the action of the Office will be based exclusively on the written record in the Office. See 37 C.F.R. §1.2. As such, Petitioner is reminded that no telephone discussion may be controlling or considered authority for Petitioner's further action(s).

UNITED STATES PATENT AND TRADEMARK OFFICE

COMMISSIONER FOR PATENTS
UNITED STATES PATENT AND TRADEMARK OFFICE
P.O. BOX 1450
ALEXANDRIA, VA 22313-1450
WWW.USPTO.GOV

Paper No. None

COPY MAILED
NOV 21 2006
OFFICE OF PETITIONS

SUNIL K. AHUJA
27 RIO VISTA DRIVE
ALPINE NJ 07620

In re Application of Gurbakhash Singh et al. Application No. 10/926,960 Filed: August 27, 2004 Title: VEHICLE-MOUNTED HYDRO-ELECTRIC JACK SYSTEM	: : : : : :	DECISION ON RENEWED PETITION UNDER 37 C.F.R. §1.181

This is a decision on the renewed petition filed on November 6, 2006, pursuant to 37 C.F.R. §1.181, requesting that the holding of abandonment in the above-identified application be withdrawn.

The above-identified application became abandoned for failure to reply in a timely manner to the non-final Office action, mailed October 17, 2005, which set a shortened statutory period for reply of three months. No response was received, and no extensions of time under the provisions of 37 C.F.R. §1.136(a) were requested. Accordingly, the above-identified application became abandoned on January 18, 2006. A notice of abandonment was mailed on July 19, 2006.

The original petition was filed on July 25, 2006, and was dismissed via the mailing of a decision on September 11, 2006.

In the original petition, Petitioner stated that the Office communication was not received and has included a copy of the docket record where the nonreceived Office communication would have been entered had it been received and docketed.

With this renewed petition, Petitioner has attested to the fact that a search of the file jacket and docket records indicates that the Office communication was not received.

Thus, on renewed petition, Petitioner has established non-receipt of the communication.

Accordingly, the petition under 37 C.F.R. §1.181(a) is **GRANTED**. The holding of abandonment is **WITHDRAWN**.

The Technology Center will be notified of this decision. The Technology Center's support staff will re-mail the non-final action of October 17, 2005, and will set a new period for response.

Telephone inquiries regarding *this decision* should be directed to the undersigned at (571) 272-3225[1]. All other inquiries concerning examination procedures or status of the application should be directed to the Technology Center.

Paul Shanoski
Senior Attorney
Office of Petitions
United States Patent and Trademark Office

---

1 Petitioner will note that all practice before the Office should be in writing, and the action of the Office will be based exclusively on the written record in the Office. See 37 C.F.R. §1.2. As such, Petitioner is reminded that no telephone discussion may be controlling or considered authority for Petitioner's further action(s).

UNITED STATES PATENT AND TRADEMARK OFFICE

Commissioner for Patents
United States Patent and Trademark Office
P.O. Box 1450
Alexandria, VA 22313-1450
www.uspto.gov

ROSENBERG, KLEIN & LEE
3458 ELLICOTT CENTER DRIVE-SUITE 101
ELLICOTT CITY MD 21043

COPY MAILED

OCT 11 2007

OFFICE OF PETITIONS

In re Application of	:	
Wang et al.	:	
Application No. 10/926,970	:	ON PETITION
Filed: 08/27/2004	:	
Attorney Docket No. MR3315-22	:	

This is a decision on the petition under the unintentional provisions of 37 CFR 1.137(b), filed June 12, 2007, to revive the above-identified application.

The petition is **GRANTED**.

The application became abandoned for failure to timely file a reply within the meaning of 37 CFR 1.113 to the final Office action of November 1, 2006. The proposed reply required for consideration of a petition to revive must be a Notice of Appeal (and appeal fee required by 37 CFR 41.20(b)(2), an amendment that *prima facie* places the application in condition for allowance, a Request for Continued Examination and submission (37 CFR 1.114), or the filing of a continuing application under 37 CFR 1.53(b). See MPEP 711.03(c)(III)(A)(2). Petitioner obtained a request for an extension of time for response within the first month pursuant to the provisions of 37 CFR 1.136(a). Accordingly, the application became abandoned on March 2, 2007. A Notice of Abandonment was mailed on June 1, 2007.

The petition satisfies the requirements of 37 CFR 1.137(b) in that petitioner has supplied (1) the reply in the form of a Request for Continued Examination (RCE), the RCE fee and the submission required by 37 CFR 1.114; (2) the petition fee; and (3) a proper statement of unintentional delay.

Telephone inquiries concerning this decision may be directed to the undersigned at (571) 272-3211.

This application is being referred to Technology Center AU 1794 for processing of the RCE and for appropriate action by the Examiner in the normal course of business on the amendment submitted in accordance with 37 CFR 1.114.

Christina Tartera Donnell

Christina Tartera Donnell
Senior Petitions Attorney
Office of Petitions

UNITED STATES PATENT AND TRADEMARK OFFICE

Commissioner for Patents
United States Patent and Trademark Office
P.O. Box 1450
Alexandria, VA 22313-1450
www.uspto.gov

MUIR PATENT CONSULTING, PLLC
9913 Georgetown Pike, Suite 200
P.O. Box 1213
GREAT FALLS VA 22066

MAILED

JUN 21 2010

OFFICE OF PETITIONS

In re Application of	:	
Yido Koo, et al.	:	
Application No. 10/927,012	:	DECISION ON PETITION
Filed: August 27, 2004	:	
Attorney Docket No. GCTS-0052	:	

This is a decision on the petition under the unintentional provisions of 37 CFR 1.137(b), filed May 14, 2010, to revive the above-identified application.

The petition is **GRANTED**.

This application became abandoned for failure to timely pay the issue and publication fees on or before August 22, 2007, as required by the Notice of Allowance and Fee(s) Due, mailed May 22, 2007. Accordingly, the date of abandonment of this application is September 26, 2007.

The petition satisfies the requirements of 37 CFR 1.137(b) in that petitioner has supplied (1) the reply in the form of payment of the issue fee of $700 and the publication fee of $300, (2) the petition fee of $810; and (3) a proper statement of unintentional delay.

Telephone inquiries concerning this decision should be directed to Terri Johnson at (571) 272-2991.

This application is being referred to the Office of Data Management for processing into a patent.

Terri Johnson

Terri Johnson
Petitions Examiner
Office of Petitions

UNITED STATES PATENT AND TRADEMARK OFFICE

Commissioner for Patents
United States Patent and Trademark Office
P.O. Box 1450
Alexandria, VA 22313-1450
www.uspto.gov

COPY MAILED

JUL 14 2006

OFFICE OF PETITIONS

OLIFF & BERRIDGE, PLC
P.O. BOX 19928
ALEXANDRIA VA 22320

In re Application of :
Nobuo Kawasaki et al :
Application No. 10/927,057 : ON PETITION
Filed: August 27, 2004 :
Attorney Docket No. 117018 :

This is a decision on the petition, filed July 13, 2006, under 37 CFR 1.313(c)(2) to withdraw the above-identified application from issue after payment of the issue fee.

The petition is **GRANTED**.

The above-identified application is withdrawn from issue for consideration of a submission under 37 CFR 1.114 (request for continued examination). See 37 CFR 1.313(c)(2).

Petitioner is advised that the issue fee paid on May 25, 2006, in the above-identified application cannot be refunded. If, however, the above-identified application is again allowed, petitioner may request that it be applied towards the issue fee required by the new Notice of Allowance.[1]

Telephone inquiries should be directed to the undersigned at (571) 272-3208.

The examiner of Technology Center AU 2883 will consider the request for continued examination under 37 CFR 1.114.

Karen Creasy

Karen Creasy
Petitions Examiner
Office of Petitions

---

[1] The request to apply the issue fee to the new Notice may be satisfied by completing and returning the new Issue Fee Transmittal Form PTOL-85(b), which includes the following language thereon: "Commissioner for Patents is requested to apply the Issue Fee and Publication Fee (if any) or re-apply any previously paid issue fee to the application identified above." Petitioner is advised that, whether a fee is indicated as being due or not, the Issue Fee Transmittal Form **must** be completed and timely submitted to avoid abandonment. Note the language in bold text on the first page of the Notice of Allowance and Fee(s) Due (PTOL-85).

UNITED STATES PATENT AND TRADEMARK OFFICE

COMMISSIONER FOR PATENTS
UNITED STATES PATENT AND TRADEMARK OFFICE
P.O. BOX 1450
ALEXANDRIA, VA 22313-1450
www.uspto.gov

Paper No. _____

Date : July 14, 2006

TO : Director, Office of Patent Publication

FROM : Office of the Deputy Commissioner for Patent Examination Policy

SUBJECT : Withdrawal from Issue of

COPY MAILED

JUL 14 2006

OFFICE OF PETITIONS

Applicant(s) :Nobuo Kawasaki et al
Application No. :10/927,057
Filed :August 27, 2004

The above-identified application has been assigned Patent No. 7,079,261 and an issue date of July 18, 2006.

It is hereby directed that this application be withdrawn from issue at the request of the applicant.

Do not refund the issue fee.

The following erratum should be published in the Official Gazette if the above-identified application is published in the OG of July 18, 2006:

"All reference to Patent No. 7,079,261 to Nobuo Kawasaki et al of Japan for COEFFICIENT OF LINEAR EXPANSION MEASURING APPARATUS AND COEFFICIENT OF LINEAR EXPANSION MEASURING METHOD appearing in the Official Gazette of July 18, 2006 should be deleted since no patent was granted."

Karen Creasy

Karen Creasy
Petitions Examiner
Office of Petitions
Office of the Deputy Commissioner
for Patent Examination Policy

cc: Paul Harrison, MDW-4B03,(FAX-273-5468)
Deneise Boyd, MDE-3D39 (FAX-273-5124)
Mary Louise McAskill, ST-8C15 (FAX 305-4372)
Niomi Farmer, ST-8C14 (FAX-305-4372)
Mary E. Johnson (Cookie), MDE-7C71 (FAX 273-0038
Duane Davis P/OPC MDE-7D89

UNITED STATES PATENT AND TRADEMARK OFFICE

UNITED STATES DEPARTMENT OF COMMERCE
United States Patent and Trademark Office
Address: COMMISSIONER FOR PATENTS
P.O. Box 1450
Alexandria, Virginia 22313-1450
www.uspto.gov

APPLICATION NO.	FILING DATE	FIRST NAMED INVENTOR	ATTORNEY DOCKET NO.	CONFIRMATION NO.
10/927,099	08/27/2004	Yasuhiro Nonobe	257663US-2DIV	1846

22850 7590 08/13/2009
OBLON, SPIVAK, MCCLELLAND MAIER & NEUSTADT, L.L.P.
1940 DUKE STREET
ALEXANDRIA, VA 22314

EXAMINER
HODGE, ROBERT W

ART UNIT	PAPER NUMBER
1795	

NOTIFICATION DATE	DELIVERY MODE
08/13/2009	ELECTRONIC

Please find below and/or attached an Office communication concerning this application or proceeding.

The time period for reply, if any, is set in the attached communication.

Notice of the Office communication was sent electronically on above-indicated "Notification Date" to the following e-mail address(es):

patentdocket@oblon.com
oblonpat@oblon.com
jgardner@oblon.com

UNITED STATES PATENT AND TRADEMARK OFFICE

Commissioner for Patents
United States Patent and Trademark Office
P.O. Box 1450
Alexandria, VA 22313-1450
www.uspto.gov

wk

Mailed : AUG 13 2009

In re Application of
Nonobe et al.
Serial No. 10/927,099
Filed: August 27, 2004
For: ON-BOARD FUEL CELL SYSTEM AND METHOD OF CONTROLLING THE SAME

DECISION ON PETITION

This is a decision on the PETITION FILED UNDER 37 CFR 1.144 and 1.181 TO WITHDRAW THE RESTRICTION REQUIREMENT made February 5, 2009.

In the restriction mailed on February 5, 2009, the Examiner set forth a two-way requirement.

I. Species 1- Figure 1.

II. Species 2- Figure 4.

Applicants traversed the election requirement and provisionally elected Species 1. Claims 1-6, 12-15 and 21-26 are generic or readable on the elected Species.

Applicant asserts that the Examiner failed to establish a serious or undue burden. Further, the application was examined through final rejection prior to filing of an RCE, and therefore, both Species were purportedly searched. It is noted that in the final office action dated September 24, 2008, claims to both species had already been allowed.

DECISION

No serious burden has been established in examining all claims together and the election of species requirement is manifestly improper in withdrawing claims that were previously examined and allowed.

Accordingly, the petition to withdraw the restriction requirement is **GRANTED.**

/Gregory L Mills/
Gregory L. Mills, Acting Director
Technology Center 1700
Chemical and Materials Engineering

Steven P. Weihrouch
OBLON, SPIVAK, MCCLELLAND MAIER & NEUSTADT, P.C.
1940 DUKE STREET
ALEXANDRIA VA 22314

UNITED STATES PATENT AND TRADEMARK OFFICE

COMMISSIONER FOR PATENTS
UNITED STATES PATENT AND TRADEMARK OFFICE
P.O. BOX 1450
ALEXANDRIA, VA 22313-1450
www.uspto.gov

MAIL

SEP 21 2005

DIRECTOR OFFICE
TECHNOLOGY CENTER 2100

MATTINGLY, STANGER, MALUR & BRUNDIDGE, P.C.
1800 DIAGONAL ROAD
SUITE 370
ALEXANDRIA VA 22314

In re Application of: KUBO, et al.
Application No. 10/927,137
Filed: August 27, 2004
For: A METHOD FOR ACQUIRING SNAPSHOT

DECISION ON PETITION
TO MAKE SPECIAL
(ACCELERATED EXAMINATION)
UNDER M.P.E.P. §708.02 (VIII)

This is a response to the petition filed 10 August 2005 under 37 C.F.R. §1.102(d) and M.P.E.P. §708.02 (VIII): Accelerated Examination, to make the above-identified application special.

The Petition is **GRANTED**.

M.P.E.P. §708.02, Section VIII which sets out the prerequisites for a grantable petition for Accelerated Examination under 37 C.F.R. §1.102(d) states in relevant part:

A new application (one which has not received any examination by the examiner) may be granted special status provided that applicant (and this term includes applicant's attorney or agent) complies with each of the following items:

(a) Submits a petition to make special accompanied by the fee set forth in **37 CFR 1.17(h)**;

(b) Presents all claims directed to a single invention, or if the Office determines that all the claims presented are not obviously directed to a single invention, will make an election without traverse as a prerequisite to the grant of special status;

(c) Submits a statement(s) that a pre-examination search was made, listing the field of search by class and subclass, publication, Chemical Abstracts, foreign patents, etc. The pre-examination search must be directed to the invention as claimed in the application for which special status is requested. A search made by a foreign patent office satisfies this requirement;

(d) Submits one copy each of the references deemed most closely related to the subject matter encompassed by the claims if said references are not already of record; and

(e) Submits a detailed discussion of the references, which discussion points out, with the particularity required by 37 CFR 1.111 (b) and (c), how the claimed subject matter is patentable over the references.

Applicant's submission meets all the criteria set out above. The statement repeated for each reference deemed most closely related in the discussion of each reference on pages 9-15 of the petition is sufficient in distinguishing how the claimed subject matter is patentable over the references. Accordingly, the petition is **GRANTED**.

It is noted that although the statement discussed above has been deemed sufficient, the petition as a whole is potentially confusing. In addition to the statement discussed above, the petition also identifies a first feature of independent claim 1, a second feature of independent claims 2 and 6, a third feature of independent claim 7, a fourth feature of independent claims 8 and 12, and a fifth feature of independent claim 13 and then states that "the prior art does not teach or suggest, at a minimum, the above-described features" (pages 7-8 of the petition). The statement repeated for each reference on pages 9-15 essentially recites a subset of each of the first, second, third, fourth, and fifth features. The petition is potentially confusing since the statement for each reference and the numbered features are of different scope and one could argue that it is not clear whether the statement is intended to distinguish the references or whether the numbered features are intended to distinguish the references. Accordingly, it is suggested that any future petitions be prepared so that there is no such potential confusion. Also, it is suggested that if the identical statement is being made to distinguish each reference from the claims, then the statement should simply be made once in the petition. (E.g., "None of the references disclose . . . .")

The application file is being forwarded to the Examiner of Record for accelerated examination according to the procedures set forth in MPEP § 708.02, Section VIII.

Pinchus M. Laufer
Special Program Examiner
Technology Center 2100
Computer Architecture, Software and Information Security
571-272-3599

ds

UNITED STATES PATENT AND TRADEMARK OFFICE

Commissioner for Patents
United States Patent and Trademark Office
P.O. Box 1450
Alexandria, VA 22313-1450
www.uspto.gov

MATTINGLY, STANGER, MALUR & BRUNDIDGE, P.C.
1800 DIAGONAL ROAD
SUITE 370
ALEXANDRIA VA 22314

COPY MAILED

FEB 0 2 2007

OFFICE OF PETITIONS

Application of	:	
Kubo et al.	:	
Application No. 10/927,137	:	DECISION GRANTING PETITION
Filed: August 27, 2004	:	UNDER 37 CFR 1.55(c)
Attorney Docket No. ASA-1191	:	

This is a decision on the petition under 37 CFR 1.55(c), filed November 6, 2006, for acceptance of an unintentionally delayed claim under 35 U.S.C. § 119(a)-(d) for benefit of the filing date of Japanese Patent Application No. 2004-202564, filed July 9, 2004.

A petition under 37 CFR 1.55(c) to accept an unintentionally delayed claim for priority requires:

(1) The nonprovisional application claiming the benefit of an earlier filing date must be filed on or after November 29, 2000;

(2) the claim submitted with the petition must identify the prior foreign application for which priority is claimed, as well as any foreign application for the same subject matter and having a filing date before that of the application for which priority is claimed, by the application number, country, and the filing date and be included either in an oath or declaration (37 CFR 1.63(c)(2)) or in an Application Data Sheet (37 CFR 1.76(b)(6);

(3) the surcharge as set forth in 37 CFR 1.17(t);

(4) a statement that the entire delay between the date the claim was due under 37 CFR 1.55(a)(1) and the date the claim was filed was unintentional. (The Commissioner may require additional information where there is a question whether the delay was unintentional.); and

(5) the above-identified nonprovisional application must be filed within 12 months of the filing date of the foreign application.

The instant pending nonprovisional application was filed after November 29, 2000, and did not include a reference to the foreign application, for which benefit is now sought, within the later of four months from the actual filing date of the application or sixteen months from the filing date of the prior foreign application. Therefore, since the claim for priority is submitted after the period specified in 37 CFR 1.55(a)(1)(i), this is an appropriate petition under the provisions of 37 CFR 1.55(c).

The above-identified pending nonprovisional application was filed on August 27, 2004, which is after November 29, 2000 and within 12 months of July 9, 2004. On November 6, 2006, an executed oath/declaration was received which identifies the foreign application for which priority is claimed by application number, country and filing date. The required petition fee of $1370.00 was received with the petition. Lastly, petitioner has provided an adequate statement of unintentional delay.

All requirements being met, the petition under 37 CFR 1.55(c) to accept an unintentionally delayed claim for priority under 35 U.S.C. § 119(a)-(d) is **GRANTED**.

A filing receipt accompanies this decision on petition.

This application is being forwarded to Technology Center AU 2185 for examination in due course and for consideration by the examiner of record of the foreign priority claim under 35 U.S.C. § 119(a)-(d).

Any inquiries directly pertaining to this decision may be directed to the undersigned at (571) 272-3206. All other inquiries should be directed to the Technology Center.

Liana Walsh
Petitions Examiner
Office of Petitions

ATTACHMENT: Corrected Filing Receipt

UNITED STATES PATENT AND TRADEMARK OFFICE

UNITED STATES DEPARTMENT OF COMMERCE
United States Patent and Trademark Office
Address: COMMISSIONER FOR PATENTS
P.O. Box 1450
Alexandria, Virginia 22313-1450
www.uspto.gov

APPL NO.	FILING OR 371 (c) DATE	ART UNIT	FIL FEE REC'D	ATTY.DOCKET NO	DRAWINGS	TOT CLMS	IND CLMS
10/927,137	08/27/2004	2185	1244	ASA-1191	15	13	7

CONFIRMATION NO. 3163
CORRECTED FILING RECEIPT
OC000000022262603
OC000000022262603

24956
MATTINGLY, STANGER, MALUR & BRUNDIDGE, P.C.
1800 DIAGONAL ROAD
SUITE 370
ALEXANDRIA, VA 22314

Date Mailed: 01/31/2007

Receipt is acknowledged of this regular Patent Application. It will be considered in its order and you will be notified as to the results of the examination. Be sure to provide the U.S. APPLICATION NUMBER, FILING DATE, NAME OF APPLICANT, and TITLE OF INVENTION when inquiring about this application. Fees transmitted by check or draft are subject to collection. Please verify the accuracy of the data presented on this receipt. **If an error is noted on this Filing Receipt, please mail to the Commissioner for Patents P.O. Box 1450 Alexandria Va 22313-1450. Please provide a copy of this Filing Receipt with the changes noted thereon. If you received a "Notice to File Missing Parts" for this application, please submit any corrections to this Filing Receipt with your reply to the Notice. When the USPTO processes the reply to the Notice, the USPTO will generate another Filing Receipt incorporating the requested corrections (if appropriate).**

Applicant(s)

Kei Kubo, Yokohama, JAPAN;
Koji Sugiyama, Yokohama, JAPAN;

Power of Attorney:

Gene Stockman--21021
John Mattingly--30293
Jeffrey Ketchum--31174
Daniel Stanger--32846
Scott Brickner--34553
Shrinath Malur--34663

Domestic Priority data as claimed by applicant

Foreign Applications

JAPAN 2003-421955 12/19/2003
JAPAN 2004-202564 07/09/2004

If Required, Foreign Filing License Granted: 10/26/2004

The country code and number of your priority application, to be used for filing abroad under the Paris Convention, is US10/927,137

Projected Publication Date: Not Applicable

Non-Publication Request: No

Early Publication Request: No

Title

Method for acquiring snapshot

Preliminary Class

711

PROTECTING YOUR INVENTION OUTSIDE THE UNITED STATES

Since the rights granted by a U.S. patent extend only throughout the territory of the United States and have no effect in a foreign country, an inventor who wishes patent protection in another country must apply for a patent in a specific country or in regional patent offices. Applicants may wish to consider the filing of an international application under the Patent Cooperation Treaty (PCT). An international (PCT) application generally has the same effect as a regular national patent application in each PCT-member country. The PCT process **simplifies** the filing of patent applications on the same invention in member countries, but **does not result** in a grant of "an international patent" and does not eliminate the need of applicants to file additional documents and fees in countries where patent protection is desired.

Almost every country has its own patent law, and a person desiring a patent in a particular country must make an application for patent in that country in accordance with its particular laws. Since the laws of many countries differ in various respects from the patent law of the United States, applicants are advised to seek guidance from specific foreign countries to ensure that patent rights are not lost prematurely.

Applicants also are advised that in the case of inventions made in the United States, the Director of the USPTO must issue a license before applicants can apply for a patent in a foreign country. The filing of a U.S. patent application serves as a request for a foreign filing license. The application's filing receipt contains further information and guidance as to the status of applicant's license for foreign filing.

Applicants may wish to consult the USPTO booklet, "General Information Concerning Patents" (specifically, the section entitled "Treaties and Foreign Patents") for more information on timeframes and deadlines for filing foreign patent applications. The guide is available either by contacting the USPTO Contact Center at 800-786-9199, or it can be viewed on the USPTO website at http://www.uspto.gov/web/offices/pac/doc/general/index.html.

For information on preventing theft of your intellectual property (patents, trademarks and copyrights), you may wish to consult the U.S. Government website, http://www.stopfakes.gov. Part of a Department of Commerce initiative, this website includes self-help "toolkits" giving innovators guidance on how to protect intellectual property in specific countries such as China, Korea and Mexico. For questions regarding patent enforcement issues, applicants may call the U.S. Government hotline at 1-866-999-HALT (1-866-999-4158).

LICENSE FOR FOREIGN FILING UNDER
Title 35, United States Code, Section 184
Title 37, Code of Federal Regulations, 5.11 & 5.15

GRANTED

The applicant has been granted a license under 35 U.S.C. 184, if the phrase "IF REQUIRED, FOREIGN FILING LICENSE GRANTED" followed by a date appears on this form. Such licenses are issued in all applications where

the conditions for issuance of a license have been met, regardless of whether or not a license may be required as set forth in 37 CFR 5.15. The scope and limitations of this license are set forth in 37 CFR 5.15(a) unless an earlier license has been issued under 37 CFR 5.15(b). The license is subject to revocation upon written notification. The date indicated is the effective date of the license, unless an earlier license of similar scope has been granted under 37 CFR 5.13 or 5.14.

This license is to be retained by the licensee and may be used at any time on or after the effective date thereof unless it is revoked. This license is automatically transferred to any related applications(s) filed under 37 CFR 1.53(d). This license is not retroactive.

The grant of a license does not in any way lessen the responsibility of a licensee for the security of the subject matter as imposed by any Government contract or the provisions of existing laws relating to espionage and the national security or the export of technical data. Licensees should apprise themselves of current regulations especially with respect to certain countries, of other agencies, particularly the Office of Defense Trade Controls, Department of State (with respect to Arms, Munitions and Implements of War (22 CFR 121-128)); the Bureau of Industry and Security, Department of Commerce (15 CFR parts 730-774); the Office of Foreign Assets Control, Department of Treasury (31 CFR Parts 500+) and the Department of Energy.

NOT GRANTED

No license under 35 U.S.C. 184 has been granted at this time, if the phrase "IF REQUIRED, FOREIGN FILING LICENSE GRANTED" DOES NOT appear on this form. Applicant may still petition for a license under 37 CFR 5.12, if a license is desired before the expiration of 6 months from the filing date of the application. If 6 months has lapsed from the filing date of this application and the licensee has not received any indication of a secrecy order under 35 U.S.C. 181, the licensee may foreign file the application pursuant to 37 CFR 5.15(b).

UNITED STATES PATENT AND TRADEMARK OFFICE

COMMISSIONER FOR PATENTS
UNITED STATES PATENT AND TRADEMARK OFFICE
P.O. BOX 1450
ALEXANDRIA, VA 22313-1450
www.uspto.gov

MAIL

APR 2 5 2005

DIRECTOR OFFICE
TECHNOLOGY CENTER 2600

Mark J. Thronson
DICKSTEIN SHAPIRO MORIN & OSHINSKY LLP
2101 L Street NW
Washington DC 20037-1526

In re Application of :
HAGIWARA, KEI :
Application No. 10/927,138 :
Filed: August 27, 2004 :
For: **PRE-PIT INFORMATION-DETECTING APPARATUS, OPTICAL-INFORMATION DETECTING APPARATUS, PROGRAM, AND COMPUTER-READABLE INFORMATION-RECORDING MEDIUM** :

DECISION ON PETITION
TO MAKE SPECIAL

This is a decision on the petition filed March 16, 2005 under Manual of Patent Examination Procedure §708.02, VIII requesting accelerated examination.

The petition under Manual of Patent Examination Procedure §708.02, VIII, must:
(1) be filed prior to receiving any examination by the examiner,
(2) be accompanied by the required fee- $130,
(3) the claims should be directed to a single invention (if it is determined that the claims pertain to more than one invention, then applicant will have to make an election without traverse or forfeit accelerated examination status),
(4) state that a pre-examination search was made, and fully discuss the search method employed, such as classes and subclasses searched, publications, Chemical abstracts, patents, etc. A search made by a foreign patent office satisfies this requirement,
(5) be accompanied by a copy of each of the references most closely related to the subject matter encompassed by the claims if said references are not already of record,
(6) fully discuss the references, pointing out with the particularity required by 37 C.F.R. §1.111 (b) and (c), how the claimed subject matter is patentable over the references.

The petitioner meets all the above-listed requirements. Accordingly, the petition is **GRANTED**.

The application will retain its special status throughout its entire prosecution, including any appeal to the Board of Patent Appeals and Interferences, subject only to diligent prosecution by the applicant. The application file is being forwarded to the examiner for appropriate action in due course.

Kenneth A. Wieder
Special Program Examiner
Technology Center 2600
Communications

UNITED STATES PATENT AND TRADEMARK OFFICE

UNITED STATES DEPARTMENT OF COMMERCE
United States Patent and Trademark Office
Address: COMMISSIONER FOR PATENTS
P.O. Box 1450
Alexandria, Virginia 22313-1450
www.uspto.gov

RIDOUT & MAYBEE LLP
225 KING STREET WEST
10TH FLOOR
TORONTO, ON M5V 3M2
CANADA

Mail Date: 04/21/2010

Applicant	: Steven Louis Shafer	: DECISION ON REQUEST FOR
Patent Number	: 7648982	: RECALCULATION of PATENT
Issue Date	: 01/19/2010	: TERM ADJUSTMENT IN VIEW
Appliction No	: 10/927,145	: OF WYETH AND NOTICE OF INTENT TO
Filed	: 08/27/2004	: ISSUE CERTIFICATE OF CORRECTION
		:

The Request for Recalculation is **GRANTED** to the extent indicated.

The patent term adjustment has been determined to be **0** days. The USPTO will *sua sponte* issue a certificate of correction reflecting the amount of PTA days determined by the recalculation.

Prior to the issuance of the certificate of correction, the USPTO will afford patentee an opportunity to be heard and request reconsideration. Accordingly, patentee has **one month or thirty (30) days**, whichever is longer, to file a request for reconsideration of this patent term adjustment calculation. See 35 U.S.C. 154(b)(3)(B)(ii) and 37 CFR 1.322(a)(4). No extensions of time will be granted under 37 CFR 1.136.

Patentee should use document code PET.OP if electronically filing a request for reconsideration of this patent term adjustment calculation. The patentee must also include the information required by 37 CFR 1.705(b)(2) and the fee required by 37 CFR 1.18(e). If patentee does not file a timely request for reconsideration of this patent term adjustment calculation including the information required by 37 CFR 1.705(b)(2) and the fee required by 37 CFR 1.18(e), the USPTO will issue a certificate of correction reflecting the PTA determination noted above.

Patentee should be aware that in order to preserve the right to review in the United States District Court for the District of Columbia of the USPTO patent term adjustment determination, patentee must ensure that he or she also take the steps required under 35 U.S.C. 154(b)(4)(A) in a timely manner. Nothing in the request for recalculation should be construed as providing an alternative time frame for commencing a civil action under 35 U.S.C. 154(b)(4)(A).

Any questions concerning this decision should be directed to the Office of Patent Legal Administration at 571-272-7702.

UNITED STATES PATENT AND TRADEMARK OFFICE

Commissioner for Patents
United States Patent and Trademark Office
P.O. Box 1450
Alexandria, VA 22313-1450
www.uspto.gov

FENWICK & WEST LLP
SILICON VALLEY CENTER
801 CALIFORNIA STREET
MOUNTAIN VIEW CA 94041

COPY MAILED

MAY 17 2007

OFFICE OF PETITIONS

In re Application of	:	
Dave Olson	:	
Application No. 10/927,170	:	DECISION ON PETITION
Filed: August 25, 2004	:	TO WITHDRAW
Attorney Docket No. 23368-09048	:	FROM RECORD
	:	

This is a decision on the Request to Withdraw as attorney or agent of record under 37 C.F.R. § 1.36(b) filed December 12, 2006.

The request is **DISMISSED** as moot.

A review of the file record indicates that the power of attorney to Fenwick & West, LLP has been revoked by the assignee of the patent application on April 10, 2007. Accordingly, the request to withdraw under 37 C.F.R. § 1.36(b) is moot.

All future communications from the Office will continue to be directed to the below-listed address until otherwise notified by applicant.

Telephone inquires concerning this decision should be directed to undersigned at 571-272-1642.

April M. Wise
Petitions Examiner
Office of Petitions

cc: MICHAEL L. HAWKINS
QLOGIC CORPORATION
26650 ALISO VIEJO PARKWAY
ALISO VIEJO, CA 92656

UNITED STATES PATENT AND TRADEMARK OFFICE

UNITED STATES DEPARTMENT OF COMMERCE
United States Patent and Trademark Office
Address: COMMISSIONER FOR PATENTS
P.O. Box 1450
Alexandria, Virginia 22313-1450
www.uspto.gov

APPLICATION NUMBER	FILING OR 371 (c) DATE	FIRST NAMED APPLICANT	ATTY. DOCKET NO./TITLE
10/927,170	08/25/2004	Dave Olson	23368-09048

CONFIRMATION NO. 3127

OC000000023760733

758
FENWICK & WEST LLP
SILICON VALLEY CENTER
801 CALIFORNIA STREET
MOUNTAIN VIEW, CA 94041

Date Mailed: 05/08/2007

NOTICE REGARDING CHANGE OF POWER OF ATTORNEY

This is in response to the Power of Attorney filed 04/10/2007.

- The Power of Attorney to you in this application has been revoked by the assignee who has intervened as provided by 37 CFR 3.71. Future correspondence will be mailed to the new address of record(37 CFR 1.33).

Office of Initial Patent Examination (571) 272-4000, or 1-800-PTO-9199
FORMER ATTORNEY/AGENT COPY

UNITED STATES PATENT AND TRADEMARK OFFICE

Commissioner for Patents
United States Patent and Trademark Office
P.O. Box 1450
Alexandria, VA 22313-1450
www.uspto.gov

FENWICK & WEST LLP
SILICON VALLEY CENTER
801 CALIFORNIA STREET
MOUNTAIN VIEW, CA 94041

COPY MAILED
MAR 3 1 2008

In re Application of	:	
PANIGRAHY, Rina	:	
Application No. 10/927,175	:	DECISION ON PETITION
Filed: August 25, 2004	:	TO WITHDRAW
Attorney Docket No. **03311.0015U4**	:	FROM RECORD
	:	

This is a decision on the Request to Withdraw as attorney or agent of record under 37 C.F.R. § 1.36(b), filed October 12, 2007.

The request is **NOT APPROVED** as moot.

A review of the file record indicates that the power of attorney to **FENWICK & WEST LLP** has been revoked by the assignee of the patent application on January 24, 2008. Accordingly, the request to withdraw under 37 C.F.R. § 1.36(b) is moot.

All future communications from the Office will continue to be directed to the below-listed address until otherwise notified by applicant.

Telephone inquires concerning this decision should be directed to the undersigned at 571-272-7253.

Monica A. Graves
Petitions Examiner
Office of Petitions

cc: **NEEDLE & ROSENBERG, PC**
999 PEACHTREE STREET, SUITE 1000
ATLANTA, GA 30309-3915

UNITED STATES PATENT AND TRADEMARK OFFICE

UNITED STATES DEPARTMENT OF COMMERCE
United States Patent and Trademark Office
Address: COMMISSIONER FOR PATENTS
P.O. Box 1450
Alexandria, Virginia 22313-1450
www.uspto.gov

PATTERSON & SHERIDAN, LLP/CISC
3040 POST OAK BLVD.
SUITE 1500
HOUSTON, TX 77056-6582

Mail Date: 05/20/2010

Applicant	: Rina Panigrahy	: DECISION ON REQUEST FOR
Patent Number	: 7619983	: RECALCULATION of PATENT
Issue Date	: 11/17/2009	: TERM ADJUSTMENT IN VIEW
Application No	: 10/927,175	: OF WYETH AND NOTICE OF INTENT TO
Filed	: 08/25/2004	: ISSUE CERTIFICATE OF CORRECTION
		:

The Request for Recalculation is **GRANTED** to the extent indicated.

The patent term adjustment has been determined to be **1481** days. The USPTO will *sua sponte* issue a certificate of correction reflecting the amount of PTA days determined by the recalculation.

Prior to the issuance of the certificate of correction, the USPTO will afford patentee an opportunity to be heard and request reconsideration. Accordingly, patentee has **one month or thirty (30) days**, whichever is longer, to file a request for reconsideration of this patent term adjustment calculation. See 35 U.S.C. 154(b)(3)(B)(ii) and 37 CFR 1.322(a)(4). No extensions of time will be granted under 37 CFR 1.136.

Patentee should use document code PET.OP if electronically filing a request for reconsideration of this patent term adjustment calculation. The patentee must also include the information required by 37 CFR 1.705(b)(2) and the fee required by 37 CFR 1.18(e). If patentee does not file a timely request for reconsideration of this patent term adjustment calculation including the information required by 37 CFR 1.705(b)(2) and the fee required by 37 CFR 1.18(e), the USPTO will issue a certificate of correction reflecting the PTA determination noted above.

Patentee should be aware that in order to preserve the right to review in the United States District Court for the District of Columbia of the USPTO patent term adjustment determination, patentee must ensure that he or she also take the steps required under 35 U.S.C. 154(b)(4)(A) in a timely manner. Nothing in the request for recalculation should be construed as providing an alternative time frame for commencing a civil action under 35 U.S.C. 154(b)(4)(A).

Any questions concerning this decision should be directed to the Office of Patent Legal Administration at 571-272-7702.

UNITED STATES PATENT AND TRADEMARK OFFICE

Commissioner for Patents
United States Patent and Trademark Office
P.O. Box 1450
Alexandria, VA 22313-1450
www.uspto.gov

MAILED

MAR 1 0 2005

Director's Office
Group 3700

Gerald R. Boss
Troutman Sanders LLP
600 Peachtree Street, NE
Suite 5200
Atlanta, Georgia 30308-2216

In re application of Zinn et al.	:	**DECISION ON PETITION TO MAKE SPECIAL UNDER 37 CFR. 1.102(c)**
Serial Number: 10/927205 Filed: August 26, 2004	:	

For: **STAGNATION POINT REVERSE FLOW COMBUSTOR**

This is a decision on the petition filed on August 26, 2004, under 37 CFR. 1.102(c) to make special the above identified application because of the age/health of the applicant. Since the requirements of the M.P.E.P Section 708.02 IV have been met, the petition will be GRANTED.

The examiner is directed (1) to make an interference search for possible interfering applications, (2) to promptly examine this application out of turn, and (3) if any interfering application is discovered, to examine such application simultaneously and state in the first official letter of such application that it is being taken out of turn because of a possible interference.

Petitioner is advised that this application will continue to be special, throughout its entire prosecution and pendency, including interference or appeal, if any, only is Petitioner makes a prompt bona-fide effort, in response to each Office action, to place the application in condition for allowance, even if it is necessary to conduct an interview with the Examiner to accomplish this purpose.

Summary: Decision on Petition **GRANTED**.

Richard A. Bertsch
Director
Technology Center 3700
(571) 272-3750

rt: 3/9/05

UNITED STATES PATENT AND TRADEMARK OFFICE

Commissioner for Patents
United States Patent and Trademark Office
P.O. Box 1450
Alexandria, VA 22313-1450
www.uspto.gov

MAILED

APR 2 0 2005

Director's Office
Group 3700

George P. Kobler
LANIER FORD SHAVER & PAYNE P.C.
P.O. Box 2087
Huntsvill, AL 35804-2087

In re Application of
Lee Bender
Serial No. : 10/927213
Filed : August 26, 2004
For : **INTAKE AIR PLENUM FOR INTERNAL COMBUSTION ENGINE**

: DECISION ON PETITION
: TO MAKE SPECIAL
: (INFRINGEMENT)

This is a decision on the petition under C.F.R. § 1.102(d) filed April 11, 2005 to make the above-identified application special. The petition requests that the above-identified application be made special under the procedure set forth in M.P.E.P § 708.02, item II: Infringement.

MPEP 708.02 states that a Petition to Make Special based on Infringement must have the following: (1) the appropriate petition fee under 37 CFR 1.17(h); (2) a statement by the assignee, applicant, or attorney alleging: (A) that there is an infringing device or product actually on the market; (B) that a rigid comparison of the alleged infringing device or product with the claims of the application has been made, and that, in his or her opinion, some of the claims are unquestionably infringed; and (C) that he or she has made a careful and thorough search of the prior art, or has good knowledge of the prior art, and has sent a copy of the references deemed most closely related to the subject matter encompassed by the claims.

The petition filed April 11, 2005 includes all of the requirements above and, therefore, the petition is **GRANTED**.

The examiner is directed (1) to make an interference search for possible interfering applications; (2) to promptly examine this application out of turn; and (3) if any interfering application is discovered, to examine such application simultaneously and state in the first official letter of such application that it is being taken out of turn because of a possible interference.

Petitioner is advised that this application will continue to be special, throughout its entire prosecution and pendency, including interference and appeal, if any, only if petitioner makes a prompt *bona fide* effort, in response to each Office action, to place the application in condition for allowance, even if it is necessary to conduct an interview with the examiner to accomplish this purpose.

Richard A. Bertsch

Richard A. Bertsch, Director
Technology Center 3700
Phone: (571) 272-3750
rt/4/19/05

SPE RESPONSE FOR CERTIFICATE OF CORRECTION

Paper No.: _____

DATE : 5-3-06

TO SPE OF : ART UNIT 3747

SUBJECT : Request for Certificate of Correction for Appl. No.: 10/927213 Patent No. 6990941

Please respond to this request for a certificate of correction within 7 days.

Please review the requested changes/corrections as shown in the **COCIN** document(s) in the IFW application image. No new matter should be introduced, nor should the scope or meaning of the claims be changed.

Please check figures

Please complete the response (see below) and forward the completed response to scanning using document code **COCX**.

Certificates of Correction Branch

703-308-9390 ext. _____

Thank You For Your Assistance

The request for issuing the above-identified correction(s) is hereby:

Note your decision on the appropriate box.

- ☒ **Approved** — All changes apply.
- ☐ **Approved in Part** — Specify below which changes **do not** apply.
- ☐ **Denied** — State the reasons for denial below.

Comments: _____

STEPHEN K. CRONIN
SUPERVISORY PATENT EXAMINER

SPE

3747
Art Unit

SPE RESPONSE FOR CERTIFICATE OF CORRECTION

Paper No.: _____

DATE : 5-4-06

TO SPE OF : ART UNIT 3747

SUBJECT : Request for Certificate of Correction for Appl. No.: 10/907213 Patent No.: 6990944

Please respond to this request for a certificate of correction within 7 days.

Please review the requested changes/corrections as shown in the **COCIN** document(s) in the IFW application image. No new matter should be introduced, nor should the scope or meaning of the claims be changed.

Please check figs.

Please complete the response (see below) and forward the completed response to scanning using document code **COCX**.

Certificates of Correction Branch

703-308-9390 ext. _____

Thank You For Your Assistance

The request for issuing the above-identified correction(s) is hereby:

Note your decision on the appropriate box.

- ☒ **Approved** — All changes apply.
- ☐ **Approved in Part** — Specify below which changes **do not** apply.
- ☐ **Denied** — State the reasons for denial below.

Comments: _____

STEPHEN K. CRONIN
SUPERVISORY PATENT EXAMINER

SPE

3747
Art Unit

UNITED STATES PATENT AND TRADEMARK OFFICE

COMMISSIONER FOR PATENTS
UNITED STATES PATENT AND TRADEMARK OFFICE
P.O. BOX 1450
ALEXANDRIA, VA 22313-1450
www.uspto.gov

COPY MAILED

DEC 17 2004

OFFICE OF PETITIONS

Intellectual Property Department
DEWITT ROSS & STEVENS S.C.
8000 Excelsior Drive, Suite 401
Madison WI 53717-1914

In re Application of	: DECISION DISMISSING
Stamatescu et al.	: REQUEST FOR NONPUBLICATION
Application No. 10/927,214	: UNDER 37 CFR 1.213
Filed: August 25, 2004	:
Attorney Docket No. 40725.020	:

This is in response to the paper "Response to October 25, 2004 Notice Regarding Nonpublication Request," filed via facsimile on November 1, 2004, to consider applicant's previously filed Nonpublication Request under 35 U.S.C. 122(b)(2)(B)(i) to be a valid Nonpublication Request in light of the priority claim to AU Application No. 2003904679, filed August 29, 2003.

The request is dismissed.

Applicant argues that the Nonpublication Request filed with the application is a valid Nonpublication Request even in light of the priority claim to AU Application No. 2003904679, because the invention disclosed in Australian application will not be published at eighteen months after filing. Applicant argues that the invention disclosed in the application has not been and will not be the subject of an application filed in another country, or under a multilateral international agreement, that requires publication of applications eighteen months after filing. Applicant argues that the Australian priority application is not being pursued in Australia and thus its publication is not required in Australia or elsewhere.

35 U.S.C. § 122(b)(2)(B) states:

> (i) If an applicant makes a request upon filing, certifying that the invention disclosed in the application has not and will not be the subject of an application filed in another country, or under a multilateral international agreement, that requires publication of applications 18 months after filing, the application shall not be published as provided in paragraph (1).

37 CFR 1.213 implements the provisions of 35 U.S.C. § 122(b)(2)(B).

Accordingly, in order to request nonpublication, applicants must certify that "the invention disclosed in the application has not been and will not be the subject of an application filed in another country, or under a multilateral international agreement that requires publication at eighteen months after filing." This application was filed with a priority claim to a patent application that was filed in Australia, a country that requires publication of patent application of applications 18 months after filing, and a nonpublication request with a certification that the application had not be filed in a country that requires publication 18 months after filing. Due to this inconsistency, the Office has not accepted the Nonpublication Request. The argument that the Request is proper is not persuasive because the statutory language clearly provides that so long as an application has been filed in a country (or under a multilateral agreement) that requires publication 18 months after filing, a Nonpublication Request is not appropriate. Where a patent application is filed and subsequently abandoned or withdrawn and which does not actually publish, such an application still is an application for patent. Accordingly, the statute clearly provides that where applicant has filed such an application for patent in a foreign country, applicant cannot later allege that no such application was filed in a Nonpublication Request.

Any inquiries concerning this decision may be directed to Mark Polutta at (571) 272-7709.

Karin Ferriter
Senior Legal Advisor
Office of Patent Legal Administration
Office of the Deputy Commissioner
for Patent Examination Policy

UNITED STATES PATENT AND TRADEMARK OFFICE

COMMISSIONER FOR PATENTS
UNITED STATES PATENT AND TRADEMARK OFFICE
P.O. BOX 1450
ALEXANDRIA, VA 22313-1450
www.uspto.gov

Christopher M. Goff (27860)
ARMSTRONG TEASDALE LLP
ONE METROPOLITAN SQUARE
SUITE 2600
ST. LOUIS MO 63102

COPY MAILED

MAR 16 2009

OFFICE OF PETITIONS

In re Application	:	
Maione, et al.	:	
Application No. 10/927,224	:	PATENT TERM ADJUSTMENT
Filed: August 25, 2004	:	
Dkt. No.: 27861-59	:	

This is a decision on the "PETITION FOR PATENT TERM ADJUSTMENT PURSUANT TO 37 CFR §1.705(b)," filed January 9, 2009. This matter is being treated as a timely filed application for patent term adjustment under 37 CFR 1.705(b).

The application for patent term adjustment (PTA) under 37 CFR 1.705(b) is **HELD IN ABEYANCE**.

The Determination of Patent Term Adjustment under 35 U.S.C. 154(b) was mailed October 9, 2008. The instant application for PTA was timely filed January 9, 2009 at the time of payment of the issue fee. Applicants argue that applicants are entitled to an additional adjustment of 264 days in accordance with 35 USC 154(b)(1)(B). Applicants contest the adjustment insofar as it relates to the Office's failure to issue the patent within three years of the filing date of the application pursuant to 37 CFR 1.703(b) in view of Wyeth v. Dudas, No. 07-1492 (D.D.C. September 30, 2008).

To the extent that this application for patent term adjustment requests reconsideration of the patent term adjustment as it relates to the Office's failure to issue the patent within 3 years of the filing date, a decision is being **held in abeyance** until after the actual patent date. Knowledge of the actual date the patent issues is ordinarily required to calculate the amount, if any, of additional patent term patentee is entitled to for Office failure to issue the patent within 3 years. See, 37 CFR 1.703(b). It is noted that at the time of this decision, the patent has not issued.

Applicants are given **TWO (2) MONTHS** from the issue date of the patent to file a written request for reconsideration of the patent term adjustment for Office failure to issue the patent within 3 years. A copy of this decision should accompany the request. Applicants may seek such consideration without payment of an additional fee. However, as to all other bases for seeking reconsideration of the patent term adjustment indicated in the patent, all requirements of § 1.705(d) must be met. Requests for reconsideration on other bases must be timely filed and must include payment of the required fee.

With respect to the over 3 year calculation, rather than file the request for reconsideration of Patent Term Adjustment at the time of the mailing of the notice of allowance, applicants are advised that they may wait until the time of the issuance of the patent and file a request for reconsideration of the patent term pursuant to 37 CFR 1.705(d). The USPTO notes that it does not calculate the amount of time earned pursuant to 37 CFR 1.702(b) until the time of the issuance of the patent and accordingly, the Office will consider any request for reconsideration of the patent term adjustment due to an error in the calculation of 37 CFR 1.702(b) to be timely if the request for reconsideration is filed within two months of the issuance of the patent.

Receipt is hereby acknowledged of the required patent term adjustment application fee of $200.00.

The application file is being forwarded to the Office of Data Management for issuance of the patent. The patent term adjustment indicated on the patent (as shown on the Issue Notification mailed about three weeks prior to patent issuance) will include any additional adjustment accrued both for Office delay in issuing the patent more than four months after payment of the issue fee and satisfaction of all outstanding requirements, and for the Office taking in excess of three years to issue the patent (to the extent that the three-year period does not overlap with periods already accorded).

Telephone inquiries specific to this matter should be directed to Petitions Attorney Alesia M. Brown at (571) 272-3205.

Kery Fries

Kery Fries
Senior Legal Advisor
Office of Patent Legal Administration
Office of Deputy Commissioner
for Patent Examination Policy

UNITED STATES PATENT AND TRADEMARK OFFICE

Commissioner for Patents
United States Patent and Trademark Office
P.O. Box 1450
Alexandria, VA 22313-1450
www.uspto.gov

DNAX RESEARCH, INC.
LEGAL DEPARTMENT
901 CALIFORNIA AVENUE
PALO ALTO, CA 94304

COPY MAILED

DEC 15 2005

OFFICE OF PETITIONS

In re Application of :
Pedro A. Reche-Gallardo et al :
Application No. 10/927,228 : ON PETITION
Filed: August 25, 2004 :
Attorney Docket No. DX01341B

This is a decision on the petition, filed December 9, 2005 under 37 CFR 1.313(c)(2) to withdraw the above-identified application from issue after payment of the issue fee.

The petition is **GRANTED**.

The above-identified application is withdrawn from issue for consideration of a submission under 37 CFR 1.114 (request for continued examination). See 37 CFR 1.313(c)(2).

Petitioner is advised that the issue fee paid on November 30, 2005 in the above-identified application cannot be refunded. If, however, the above-identified application is again allowed, petitioner may request that it be applied towards the issue fee required by the new Notice of Allowance.[1]

Telephone inquiries should be directed to Irvin Dingle at (571) 272-3210.

This matter is being referred to Technology Center AU 1646 for processing of the request for continued examination under 37 CFR 1.114 and for consideration of the concurrently filed Information Disclosure Statement.

Irvin Dingle
Petitions Examiner
Office of Petitions

---

[1] The request to apply the issue fee to the new Notice may be satisfied by completing and returning the new Issue Fee Transmittal Form PTOL-85(b), which includes the following language thereon: Commissioner for Patents is requested to apply the Issue Fee and Publication Fee (if any) or re-apply any previously paid issue fee to the application identified above. Petitioner is advised that, whether a fee is indicated as being due or not, the Issue Fee Transmittal Form **must** be completed and timely submitted to avoid abandonment. Note the language in bold text on the first page of the Notice of Allowance and Fee(s) Due (PTOL-85).

UNITED STATES PATENT AND TRADEMARK OFFICE

Commissioner for Patents
United States Patent and Trademark Office
P.O. Box 1450
Alexandria, VA 22313-1450
www.uspto.gov

Paper No.

BANNER & WITCOFF, LTD.
1100 13th STREET, N.W.
SUITE 1200
WASHINGTON DC 20005-4051

COPY MAILED
SEP 25 2008

In re Application of	:	
Koo et al.	:	
Application No. 10/927,233	:	LETTER REGARDING
Filed: August 27, 2004	:	PATENT TERM ADJUSTMENT
Atty Docket No. 003797.01011	:	

This letter is in response to the "MISCELLANEOUS PAPER CONCERNING PATENT TERM ADJUSTMENT" filed August 22, 2008. Pursuant to their duty of good faith and candor to the Office, applicants request review of the initial determination of patent term adjustment of seven hundred (700) days.

The request for review of the initial determination of patent term adjustment (PTA) is **DISMISSED.**

On August 8, 2008, the Office mailed the Determination of Patent Term Adjustment under 35 U.S.C. 154(b) in the above-identified application. The Notice stated that the patent term adjustment to date is 700 days. Applicants disclose that the filing of a request for continued examination (RCE) and information disclosure statement (IDS) after the mailing of the (first) notice of allowance mailed July 1, 2008 do not appear to have been considered in computing the patent term adjustment.

Applicants are incorrect. No reduction is warranted for the filing of the RCE and IDS on July 23, 2008. In lieu of paying the issue fee, applicants filed the RCE and IDS in response to, and within three months of, the mailing of the notice of allowance. As such, the calculation of applicant delay in responding to the notice of allowance mailed July 1, 2008 is based on the date of filing of the RCE and IDS. As these papers

were filed within the three-month period provided for in 37 CFR 1.704(b), there was no applicant delay. Applicants are advised had they paid the issue fee and then withdrew the application from issue to file an RCE and IDS, this would have constituted applicant delay under 37 CFR 1.704(c)(10).

In view thereof, the determination of patent term adjustment at the time of the mailing of the notice of allowance of SEVEN HUNDRED (700) days is correct.

As this letter was submitted as an advisement to the Office of an error in applicants' favor, the Office will not assess the $200.00 fee under 37 CFR 1.18(e). The Office thanks applicants for their good faith and candor in bringing this to the attention of the Office.

The Office of Data Management has been advised of this decision. The application is, thereby, forwarded to the Office of Data Management for issuance of the application. The patent term adjustment indicated on the patent (as shown on the Issue Notification mailed about three weeks prior to patent issuance) will include any additional adjustment accrued both for Office delay in issuing the patent more than four months after payment of the issue fee and satisfaction of all outstanding requirements, and for the Office taking in excess of three years to issue the patent (to the extent that the three-year period does not overlap with periods already accorded).

Telephone inquiries specific to this matter should be directed to the undersigned at (571) 272-3219.

Nancy Johnson
Senior Petitions Attorney
Office of Petitions

UNITED STATES PATENT AND TRADEMARK OFFICE

UNITED STATES DEPARTMENT OF COMMERCE
United States Patent and Trademark Office
Address: COMMISSIONER FOR PATENTS
P.O. Box 1450
Alexandria, Virginia 22313-1450
www.uspto.gov

DORSEY & WHITNEY LLP
INTELLECTUAL PROPERTY DEPARTMENT
Columbia Center
701 Fifth Avenue, Suite 6100
SEATTLE, WA 98104-7043

Mail Date: 04/21/2010

Applicant	: Tyler J. Gomm	: DECISION ON REQUEST FOR
Patent Number	: 7583115	: RECALCULATION of PATENT
Issue Date	: 09/01/2009	: TERM ADJUSTMENT IN VIEW
Appliction No	: 10/927,248	: OF WYETH AND NOTICE OF INTENT TO
Filed	: 08/26/2004	: ISSUE CERTIFICATE OF CORRECTION
		:

The Request for Recalculation is **GRANTED** to the extent indicated.

The patent term adjustment has been determined to be **217** days. The USPTO will *sua sponte* issue a certificate of correction reflecting the amount of PTA days determined by the recalculation.

Prior to the issuance of the certificate of correction, the USPTO will afford patentee an opportunity to be heard and request reconsideration. Accordingly, patentee has **one month or thirty (30) days**, whichever is longer, to file a request for reconsideration of this patent term adjustment calculation. See 35 U.S.C. 154(b)(3)(B)(ii) and 37 CFR 1.322(a)(4). No extensions of time will be granted under 37 CFR 1.136.

Patentee should use document code PET.OP if electronically filing a request for reconsideration of this patent term adjustment calculation. The patentee must also include the information required by 37 CFR 1.705(b)(2) and the fee required by 37 CFR 1.18(e). If patentee does not file a timely request for reconsideration of this patent term adjustment calculation including the information required by 37 CFR 1.705(b)(2) and the fee required by 37 CFR 1.18(e), the USPTO will issue a certificate of correction reflecting the PTA determination noted above.

Patentee should be aware that in order to preserve the right to review in the United States District Court for the District of Columbia of the USPTO patent term adjustment determination, patentee must ensure that he or she also take the steps required under 35 U.S.C. 154(b)(4)(A) in a timely manner. Nothing in the request for recalculation should be construed as providing an alternative time frame for commencing a civil action under 35 U.S.C. 154(b)(4)(A).

Any questions concerning this decision should be directed to the Office of Patent Legal Administration at 571-272-7702.

SPE RESPONSE FOR CERTIFICATE OF CORRECTION

Paper No.: ____

DATE : 3/19/08

TO SPE OF : ART UNIT 2891

SUBJECT : Request for Certificate of Correction for Appl. No.: 10/927258 Patent No: 7256055 B2

A response is requested with respect to a request for a certificate of correction.

With respect to the change(s) requested to correct Office and/or Applicant's errors, should the patent read as shown in the certificate of correction attached herewith or the COCIN document(s), in IFW images for the above-identified patented application? No new matter should be introduced, nor should the scope or meaning of the claims be changed.

If the response is for an IFW, within 7 days, please complete and forward the response, to the employee (named below) via scanning into application images, using document code **COCX**.

If the response is for a paper file wrapper, please complete the response and forward the response with the paper file wrapper, to the employee (named below), within 7 days, to:

Certificates of Correction Branch (CofC)
South Tower - 9A22
Palm Location 7580

VIRGINIA TOLBERT
Certificates of Correction Branch
703-308-9390 ext. 113

Thank You For Your Assistance

The request for issuing the above-identified correction(s) is hereby:
Note your decision on the appropriate box.

- ☒ **Approved** — **All** changes apply.
- ☐ **Approved In Part** — Specify below which changes **do not** apply.
- ☐ **Denied** — State the reasons for denial below.

Comments: _____

D. WILLIAM BAUMEISTER
SUPERVISORY PATENT EXAMINER
TECHNOLOGY CENTER 2800

SPE

2891
Art Unit

UNITED STATES PATENT AND TRADEMARK OFFICE

UNITED STATES DEPARTMENT OF COMMERCE
United States Patent and Trademark Office
Address: COMMISSIONER FOR PATENTS
P.O. Box 1450
Alexandria, Virginia 22313-1450
www.uspto.gov

APPL NO.	FILING OR 371 (c) DATE	ART UNIT	FIL FEE REC'D	ATTY.DOCKET NO	DRAWINGS	TOT CLMS	IND CLMS
10/927,261	08/26/2004	2831	770	SUSU123513	20	20	2

CONFIRMATION NO. 2637

CORRECTED FILING RECEIPT

OC000000014688055

26389
CHRISTENSEN, O'CONNOR, JOHNSON, KINDNESS, PLLC
1420 FIFTH AVENUE
SUITE 2800
SEATTLE, WA 98101-2347

Date Mailed: 12/08/2004

Receipt is acknowledged of this regular Patent Application. It will be considered in its order and you will be notified as to the results of the examination. Be sure to provide the U.S. APPLICATION NUMBER, FILING DATE, NAME OF APPLICANT, and TITLE OF INVENTION when inquiring about this application. Fees transmitted by check or draft are subject to collection. Please verify the accuracy of the data presented on this receipt. **If an error is noted on this Filing Receipt, please write to the Office of Initial Patent Examination's Filing Receipt Corrections, facsimile number 703-746-9195. Please provide a copy of this Filing Receipt with the changes noted thereon. If you received a "Notice to File Missing Parts" for this application, please submit any corrections to this Filing Receipt with your reply to the Notice. When the USPTO processes the reply to the Notice, the USPTO will generate another Filing Receipt incorporating the requested corrections (if appropriate).**

Applicant(s)

Kazuya Masu, Kawasaki-shi, JAPAN;
Kenichi Okada, Fujisawa-shi, JAPAN;
Hiroyuki Ito, Yokohama-shi, JAPAN;

Assignment For Published Patent Application

Semiconductor Technology Academic Research Center

Power of Attorney: The patent practitioners associated with Customer Number **26389**.

Domestic Priority data as claimed by applicant

Foreign Applications

JAPAN 2003-307086 08/29/2003

If Required, Foreign Filing License Granted: 10/21/2004

The country code and number of your priority application, to be used for filing abroad under the Paris Convention, is US10/927,261

Projected Publication Date: 03/17/2005

Non-Publication Request: No

Early Publication Request: No

Title

Parallel wiring and integrated circuit

Preliminary Class

174

LICENSE FOR FOREIGN FILING UNDER
Title 35, United States Code, Section 184
Title 37, Code of Federal Regulations, 5.11 & 5.15

GRANTED

The applicant has been granted a license under 35 U.S.C. 184, if the phrase "IF REQUIRED, FOREIGN FILING LICENSE GRANTED" followed by a date appears on this form. Such licenses are issued in all applications where the conditions for issuance of a license have been met, regardless of whether or not a license may be required as set forth in 37 CFR 5.15. The scope and limitations of this license are set forth in 37 CFR 5.15(a) unless an earlier license has been issued under 37 CFR 5.15(b). The license is subject to revocation upon written notification. The date indicated is the effective date of the license, unless an earlier license of similar scope has been granted under 37 CFR 5.13 or 5.14.

This license is to be retained by the licensee and may be used at any time on or after the effective date thereof unless it is revoked. This license is automatically transferred to any related applications(s) filed under 37 CFR 1.53(d). This license is not retroactive.

The grant of a license does not in any way lessen the responsibility of a licensee for the security of the subject matter as imposed by any Government contract or the provisions of existing laws relating to espionage and the national security or the export of technical data. Licensees should apprise themselves of current regulations especially with respect to certain countries, of other agencies, particularly the Office of Defense Trade Controls, Department of State (with respect to Arms, Munitions and Implements of War (22 CFR 121-128)); the Office of Export Administration, Department of Commerce (15 CFR 370.10 (j)); the Office of Foreign Assets Control, Department of Treasury (31 CFR Parts 500+) and the Department of Energy.

NOT GRANTED

No license under 35 U.S.C. 184 has been granted at this time, if the phrase "IF REQUIRED, FOREIGN FILING LICENSE GRANTED" DOES NOT appear on this form. Applicant may still petition for a license under 37 CFR 5.12, if a license is desired before the expiration of 6 months from the filing date of the application. If 6 months has lapsed from the filing date of this application and the licensee has not received any indication of a secrecy order under 35 U.S.C. 181, the licensee may foreign file the application pursuant to 37 CFR 5.15(b).

UNITED STATES PATENT AND TRADEMARK OFFICE

Commissioner for Patents
United States Patent and Trademark Office
P.O. Box 1450
Alexandria, VA 22313-1450
www.uspto.gov

Valeo, Inc.
Intellectual Property Department
4100 North Atlantic Boulevard
Auburn Hills MI 48326

COPY MAILED
AUG 24 2006
OFFICE OF PETITIONS

In re Application of	:	
Elbourini	:	
Application No. 10/927,264	:	DECISION ON PETITION
Filed: August 26, 2004	:	TO WITHDRAW
Attorney Docket No. RUS118	:	FROM RECORD
	:	

This is a decision on the Request to Withdraw as attorney or agent of record under 37 C.F.R. § 1.36(b), filed January 5, 2006.

The request is **APPROVED**.

A grantable request to withdraw as attorney/agent of record must be signed by every attorney/agent seeking to withdraw or contain a clear indication that one attorney is signing on behalf of another/others. A request to withdraw will not be approved unless at least 30 (thirty) days would remain between the date of approval and the later of the expiration date of a time to file a response or the expiration date of the maximum time period which can be extended under 37 C.F.R. § 1.136(a).

The request was signed by Thomas P. Liniak on behalf of himself.

All other attorneys/agents associated with this application remain of record.

The correspondence address of record remains unchanged.

Telephone inquiries concerning this decision should be directed to April Wise at 571-272-1642.

April M. Wise
Petitions Examiner
Office of Petitions

UNITED STATES PATENT AND TRADEMARK OFFICE

Commissioner for Patents
United States Patent and Trademark Office
P.O. Box 1450
Alexandria, VA 22313-1450
www.uspto.gov

FENWICK & WEST LLP
SILICON VALLEY CENTER
801 CALIFORNIA STREET
MOUNTAIN VIEW, CA 94041

COPY MAILED

APR 07 2008

OFFICE OF PETITIONS

In re Application of	:	
Rina Panigrahy, et al.	:	
Application No. 10/927,290	:	DECISION ON PETITION
Filed: August 25, 2004	:	TO WITHDRAW
Attorney Docket No. 22347-09070	:	FROM RECORD
	:	

This is a decision on the Request to Withdraw as attorney or agent of record under 37 C.F.R. § 1.36(b), filed October 12, 2007.

The request is **DISMISSED** as moot.

A review of the file record indicates that the power of attorney to Fenwick & West, LLP has been revoked by the assignee of the patent application on January 24, 2008. Accordingly, the request to withdraw under 37 C.F.R. § 1.36(b) is moot.

All future communications from the Office will continue to be directed to the below-listed address until otherwise notified by applicant.

Telephone inquires concerning this decision should be directed to undersigned at 571-272-1642.

April M. Wise
Petitions Examiner
Office of Petitions

cc: GREGORY J. KIRSCH
NEEDLE & ROSENBERG, PC
999 PEACHTREE STREET
SUITE 1000
ATLANTA, GA 30309

UNITED STATES PATENT AND TRADEMARK OFFICE

UNITED STATES DEPARTMENT OF COMMERCE
United States Patent and Trademark Office
Address: COMMISSIONER FOR PATENTS
P.O. Box 1450
Alexandria, Virginia 22313-1450
www.uspto.gov

PATTERSON & SHERIDAN, LLP/CISC
3040 POST OAK BLVD.
SUITE 1500
HOUSTON, TX 77056-6582

Mail Date: 06/01/2010

Applicant	: Rina Panigrahy	: DECISION ON REQUEST FOR
Patent Number	: 7623468	: RECALCULATION of PATENT
Issue Date	: 11/24/2009	: TERM ADJUSTMENT IN VIEW
Application No	: 10/927,290	: OF WYETH AND NOTICE OF INTENT TO
Filed	: 08/25/2004	: ISSUE CERTIFICATE OF CORRECTION
		:

The Request for Recalculation is **GRANTED** to the extent indicated.

The patent term adjustment has been determined to be **1474** days. The USPTO will *sua sponte* issue a certificate of correction reflecting the amount of PTA days determined by the recalculation.

Prior to the issuance of the certificate of correction, the USPTO will afford patentee an opportunity to be heard and request reconsideration. Accordingly, patentee has **one month or thirty (30) days**, whichever is longer, to file a request for reconsideration of this patent term adjustment calculation. See 35 U.S.C. 154(b)(3)(B)(ii) and 37 CFR 1.322(a)(4). No extensions of time will be granted under 37 CFR 1.136.

Patentee should use document code PET.OP if electronically filing a request for reconsideration of this patent term adjustment calculation. The patentee must also include the information required by 37 CFR 1.705(b)(2) and the fee required by 37 CFR 1.18(e). If patentee does not file a timely request for reconsideration of this patent term adjustment calculation including the information required by 37 CFR 1.705(b)(2) and the fee required by 37 CFR 1.18(e), the USPTO will issue a certificate of correction reflecting the PTA determination noted above.

Patentee should be aware that in order to preserve the right to review in the United States District Court for the District of Columbia of the USPTO patent term adjustment determination, patentee must ensure that he or she also take the steps required under 35 U.S.C. 154(b)(4)(A) in a timely manner. Nothing in the request for recalculation should be construed as providing an alternative time frame for commencing a civil action under 35 U.S.C. 154(b)(4)(A).

Any questions concerning this decision should be directed to the Office of Patent Legal Administration at 571-272-7702.

UNITED STATES PATENT AND TRADEMARK OFFICE

Commissioner for Patents
United States Patent and Trademark Office
P.O. Box 1450
Alexandria, VA 22313-1450
www.uspto.gov

FLIESLER MEYER, LLP
FOUR EMBARCADERO CENTER
SUITE 400
SAN FRANCISCO CA 94111

COPY MAILED

SEP 2 8 2005

OFFICE OF PETITIONS

In re Application of Beust et al. Application No. 10/927,293 Filed: August 26, 2004 Attorney Docket No. BEAS-01610US2 Title: Systems and Methods for Plain Old Java Object (POJO) Retrieval	DECISION REFUSING STATUS UNDER 37 CFR 1.47(a)

This is in response to the petition filed May 12, 2005, under 37 CFR. §1.47(b). This petition is properly treated as a petition under 37 CFR 1.47(a).

The petition under 37 CFR. §1.47(a) is **DISMISSED**.

Rule 47 applicant is given TWO MONTHS from the mailing date of this decision to reply, correcting the below-noted deficiencies. Any reply should be entitled "Request for Reconsideration of Petition Under 37 CFR. §1.47(a)," and should only address the deficiencies noted below, except that the reply may include an oath or declaration executed by the non-signing inventor. **Failure to respond will result in abandonment of the application**. Any extensions of time will be governed by 37 CFR. §1.136(a).

The above-identified application was filed on August 26, 2004, without an executed oath or declaration. Accordingly, on November 1, 2005, applicant was mailed a "Notice to File Missing Parts of Nonprovisional Application - Filing Date Granted," requiring for the purposes of this decision an executed oath or declaration in compliance with §1.63, and a surcharge for its late filing. This Notice set an extendable two-month period for reply of January 1, 2005. The Notice was subsequently withdrawn and a corrected Notice to file Missing Parts was mailed on July 11, 2005.

In reply, applicant filed a petition, the surcharge for late filing of the declaration, and a partially executed declaration. To make the reply timely, a five (5) month extension of time was also submitted.

A grantable petition under 37 CFR. §1.47(a) requires: (1) proof that the non-signing inventor cannot be reached or refuses to sign the oath or declaration after having been presented with the application papers (specification, claims and drawings); (2) an acceptable oath or declaration in compliance with 35 U.S.C. §§115 and 116; (3) the

petition fee; and (4) a statement of the last known address of the non-signing inventor. The instant petition does not satisfy requirements (1) and (2).

As to item (1), rule 47 applicant has failed to show that inventor Beust was ever presented with a copy of the application papers. Before a refusal can be alleged, applicant must demonstrate a bona fide attempt was made to present a copy of application papers (specification, including claims, drawings, and oath or declaration) to the non-signing inventors. See MPEP 409.03(d). The evidence presented only indicates that the assignment and declaration were the only documents presented. If the application papers were presented, a statement should be provided on renewed petition.

As to item (2) the declaration states that inventor Beust is a U.S. citizen but the petition states that he is a French citizen. Rule 47 applicant should clarify the record. If Beust is a French citizen a newly executed oath or declaration is required. If Beust is a U.S. citizen, a statement to that effect should be provided.

Further correspondence with respect to this matter should be addressed as follows:

By mail:	Mail Stop Petition Commissioner for Patents P.O. Box 1450 Alexandria, VA 22313-1450
By facsimile:	(571) 273-8300
By delivery service: (FedEx, UPS, DHL, etc.)	U.S. Patent and Trademark Office Customer Service Window, Randolph Building 401 Dulany Street Alexandria, VA 22314

Telephone inquiries related to this decision may be directed to the undersigned at (571) 272-3215.

Charlema R. Grant
Petitions Attorney
Office of Petitions

UNITED STATES PATENT AND TRADEMARK OFFICE

Commissioner for Patents
United States Patent and Trademark Office
P.O. Box 1450
Alexandria, VA 22313-1450
www.uspto.gov

JJGJR.: 07-04

Paper No: __

FLIESLER MEYER, LLP
FOUR EMBARCADERO CENTER
SUITE 400
SAN FRANCISCO CA 94111

COPY MAILED

JUL 28 2005

OFFICE OF PETITIONS

In re Application of	:	
Beust, et al.	:	
Application No. 10/927,336	:	ON PETITION
Filed: 26 August, 2004	:	
Attorney Docket No. BEAS-01610US3 SRM/DTX	:	

This is a decision on the papers submitted and considered as a petition filed on 12 May, 2005, under 37 C.F.R. §1.47(a).

For the reasons set forth below, the petition under 37 C.F.R. §1.47(a) is **DISMISSED**.

NOTES:

(1) Any reply must include a renewed petition (and fee) must include a petition under 37 C.F.R. §1.47 and must be submitted within two (2) months from the mail date of this decision. Extensions of time under 37 C.F.R. §1.136(a) are permitted. The reconsideration request should include a cover letter entitled "Petition under 37 C.F.R. §1.47";

(2) Thereafter, there will be no further reconsideration of this matter.

BACKGROUND

The record indicates:

- the instant application was filed on 26 August, 2004, without, *inter alia*, a fully executed oath/declaration;

- on 25 October, 2004, the Office mailed a Notice of Missing Parts indicating, *inter alia*, that a fully executed oath/declaration was required within two months;

- on 12 May, 2005, Petitioner filed the instant petition with, *inter alia*, a statement by Petitioner David T. Xue (Reg. No. 54,554), along with an oath/declaration containing the signature of named co-inventor White (for himself and on behalf of) but without the signature of named non-signing co-inventor Cedric Beust (Mr. Beust), a narration the statement of, and an averment that the oath or declaration was presented to Mr. Beust–however, the transmittal letter speaks only to the oath/declaration and assignment and thus does not demonstrate that the entire application (description, claims, abstract, drawings) was presented to the non-signing inventor Mr. Beust along with the oath or declaration.

ANALYSIS

The regulations at 37 C.F.R. §1.47 provide in pertinent part:

> **§ 1.47 Filing when an inventor refuses to sign or cannot be reached.**
> (a) If a joint inventor refuses to join in an application for patent or cannot be found or reached after diligent effort, the application may be made by the other inventor on behalf of himself or herself and the nonsigning inventor. The oath or declaration in such an application must be accompanied by a petition including proof of the pertinent facts, the fee set forth in § 1.17(h), and the last known address of the nonsigning inventor. The nonsigning inventor may subsequently join in the application by filing an oath or declaration complying with §1.63.
> * * *

The regulations at 37 C.F.R. §1.63 provide in pertinent part:

> **§1.63 Oath or declaration.**
>
> (b) In addition to meeting the requirements of paragraph (a)of this section, the oath or declaration must also:
>
> (1)Identify the application to which it is directed;
>
> (2) State that the person making the oath or declaration has

> the claims, as amended by any amendment specifically referred to in the oath or declaration; and
>
> (3) State that the person making the oath or declaration acknowledges the duty to disclose to the Office all information known to the person to be material to patentability as defined in § 1.56.

When one alleges a refusal of the inventor to sign the application papers, the circumstances of the presentation of the application papers and of the refusal must be specified in a statement of facts by the person who, *inter alia*, presented the inventor with the application papers and/or to whom the refusal was made.

The commentary at MPEP §409.03(d) provides:

> **409.03(d) Proof of Unavailability or Refusal**
>
> INVENTOR CANNOT BE REACHED
>
> Where inability to find or reach a nonsigning inventor "after diligent effort" is the reason for filing under 37 C.F.R. §1.47, a statement of facts should be submitted that fully describes the exact facts which are relied on to establish that a diligent effort was made.
>
> The fact that a nonsigning inventor is on vacation or out of town and is therefore temporarily unavailable to sign the declaration is not an acceptable reason for filing under 37 C.F.R. §1.47.
>
> Furthermore, the fact that an inventor is hospitalized and/or is not conscious is not an acceptable reason for filing under 37 C.F.R. §1.47. 37 C.F.R. §1.43 may be available under these circumstances. See MPEP §409.02. Such a petition under 37 C.F.R. §1.47 will be dismissed as inappropriate.
>
> The statement of facts must be signed, where at all possible, by a person having firsthand knowledge of the facts recited therein. Statements based on hearsay will not normally be accepted. Copies of documentary evidence such as internet searches, certified mail return receipts, cover letters of instructions, telegrams, that support a finding that the nonsigning inventor could not be found or reached should be made part of the statement. The steps taken to locate the whereabouts of the nonsigning inventor should be included statement of facts. It is important that the statement contain facts as opposed to conclusions.

REFUSAL TO JOIN

A refusal by an inventor to sign an oath or declaration when the inventor has not been presented with the application papers does not itself suggest that the inventor is refusing to join the application unless it is clear that the inventor understands exactly what he or she is being asked to sign and refuses to accept the application papers. A copy of the application papers should be sent to the last known address of the nonsigning inventor, or, if the nonsigning inventor is represented by counsel, to the address of the nonsigning inventor's attorney. The fact that an application may contain proprietary information does not relieve the 37 C.F.R. §1.47 applicant of the responsibility to present the application papers to the inventor if the inventor is willing to receive the papers in order to sign the oath or declaration. It is noted that the inventor may obtain a complete copy of the application, unless the inventor has assigned his or her interest in the application, and the assignee has requested that the inventor not be permitted access. See MPEP §106. It is reasonable to require that the inventor be presented with the application papers before a petition under 37 C.F.R. §1.47 is granted since such a procedure ensures that the inventor is apprised of the application to which the oath or declaration is directed. In re Gray, 115 USPQ 80 (Comm'r Pat. 1956).

Where a refusal of the inventor to sign the application papers is alleged, the circumstances of the presentation of the application papers and of the refusal must be specified in a statement of facts by the person who presented the inventor with the application papers and/or to whom the refusal was made. Statements by a party not present when an oral refusal is made will not be accepted.

Proof that a bona fide attempt was made to present a copy of the application papers (specification, including claims, drawings, and oath or declaration) to the nonsigning inventor for signature, but the inventor refused to accept delivery of the papers or expressly stated that the application papers should not be sent, may be sufficient.

When there is an express oral refusal, that fact along with the time and place of the refusal must be stated in the statement of facts. When there is an express written refusal, a copy of the document evidencing that refusal must be made part of the statement of facts. The document may be redacted to remove material not related to the inventor's reasons for refusal.

When it is concluded by the 37 C.F.R. §1.47 applicant that a nonsigning inventor's conduct constitutes a refusal, all facts upon which that conclusion is based should be stated in the statement of facts in support of the petition or directly in the petition. If there is documentary evidence to support facts alleged in the petition or

> in any statement of facts, such evidence should be submitted. Whenever a nonsigning inventor gives a reason for refusing to sign the application oath or declaration, that reason should be stated in the petition.

Thus, not only must a copy of the entire application must be sent to the last known address of the non-signing inventor (or the estate representative) with a request that he/she sign the declaration for the patent application–and evidence of that transmittal submitted–but also a reasonable effort must be made to ascertain a current or last known address, and the petition (with fee) must state over the signature and registration number of the Petitioner the last known address and, if appropriate, evidence of the due diligence effort ascertaining same.

Alternatively, an oath or declaration for the patent application in compliance with 37 C.F.R. §§1.63 and 1.64 must be presented.

(The declaration must set forth the inventor's residence, citizenship and post office address. An oath or declaration in compliance with 37 C.F.R. §§1.63 and 1.64 signed by the Rule 1.47 applicant is required.[1])

CONCLUSION

The record as it stands shows no effort to comply with the regulations and provide a last known address for the non-signing inventors, a showing of a diligent effort to obtain same, or the transmission of the entire application (description, claims, abstract and drawings)–as evidenced by a copy of the transmittal letter describing same. The evidence of these requirements should be submitted with any renewed petition.

Therefore, the instant petition hereby is **dismissed**.

Further correspondence with respect to this matter should be addressed as follows:[2]

---

[1] See: MPEP 409.03(b).

[2] On July 15, 2005, the Central Facsimile (FAX) Number will change from (703) 872-9306 to (571) 273-8300. Faxes sent to the old number will be routed to the new number until September 15, 2005. After September 15, 2005, the old number will no longer be in service and (571) 273-8300 will be the only facsimile number recognized for centralized delivery. (For further information. see: http://www.uspto.gov/web/offices/pac/dapp/opla/preognotice/cfax062005.pdf .)

By mail: Commissioner for Patents[3]
P.O. Box 1450
Alexandria, VA 22313-1450

By FAX: IFW Formal Filings
(571) 273-8300
ATTN.: Office of Petitions

By hand: Mail Stop: Petition
Customer Service Window
Randolph Building
401 Dulany Street
Alexandria, VA 22314

Telephone inquiries regarding this decision should be directed to the undersigned at (571) 272-3214.

John J. Gillon, Jr.
Senior Attorney
Office of Petitions

[3] To determine the appropriate addresses for other subject-specific correspondence, refer to the USPTO Web site at www.uspto.gov.

UNITED STATES PATENT AND TRADEMARK OFFICE

Commissioner for Patents
United States Patent and Trademark Office
P.O. Box 1450
Alexandria, VA 22313-1450
www.uspto.gov

JJGJR.: 05-06

Paper No: __

FLIESLER MEYER, LLP
FOUR EMBARCADERO CENTER
SUITE 400
SAN FRANCISCO CA 94111

COPY MAILED

JUN 0 5 2006

OFFICE OF PETITIONS

In re Application of	:	
Beust, et al.	:	
Application No. 10/927,336	:	ON PETITION
Filed: 26 August, 2004	:	
Attorney Docket No. BEAS-01610US3 SRM/DTX	:	

This is a decision on the papers submitted and considered as a renewed petition filed on 2 November, 2005, under 37 C.F.R. §1.47(a).

The petition under 37 C.F.R. §1.47(a) (so considered from the papers of 2 November, 2005) is **DISMISSED–and the apparent abandonment of the application is noted**.

NOTES:

(1) Any reply must include a renewed petition (and fee) must include a petition under 37 C.F.R. §1.47 and must be submitted within two (2) months from the mail date of this decision. Extensions of time under 37 C.F.R. §1.136(a) are permitted. The reconsideration request should include a cover letter entitled "Petition under 37 C.F.R. §1.47";

(2) Thereafter, there will be no further reconsideration of this matter.

BACKGROUND

The record indicates:

- the instant application was filed on 26 August, 2004, without, *inter alia*, a fully executed oath/declaration;
- on 25 October, 2004, the Office mailed a Notice of Missing Parts indicating, *inter alia*, that a fully executed oath/declaration was required within two months;
- on 12 May, 2005, Petitioner filed the original petition with, *inter alia*, a statement by Petitioner David T. Xue (Reg. No. 54,554), along with an oath/declaration containing the signature of named co-inventor White (for himself and on behalf of) but without the signature of named non-signing co-inventor Cedric Beust (Mr. Beust), a narration the statement of, and an averment that the oath or declaration was presented to Mr. Beust–however, the transmittal letter speaks only to the oath/declaration and assignment and thus does not demonstrate that the entire application (description, claims, abstract, drawings) was presented to the non-signing inventor Mr. Beust along with the oath or declaration, and so the petition was dismissed on 28 July, 2005, and Petitioner was given two months within which to reply;
- the instant papers suggest a possible joinder–and should be so pleaded in the petition–however, the papers were untimely filed and no request and fee for extension of time were in evidence.

Thus, the application appears to have gone abandoned by operation of law after midnight 28 September, 2005.

Petitioner's only alternative to irretrievable abandonment is to file a petition and fee, and the statement/showing alleging unintentional delay under 37 C.F.R. §1.137(b)[1]–along with the proper reply (the renewed petition under 37 C.F.R. §1.147(a) alleging joinder, with evidence thereof).

Petitioner may wish to file such a petition to the Commissioner requesting revival of an application abandoned due to unintentional delay. (See: http://www.uspto.gov/web/offices/pac/mpep/documents/0700_711_03_c.htm#sect711.03c)

A petition to revive on the grounds of unintentional delay must be filed promptly and such petition must be accompanied by the reply (the amendment), the petition fee, and a statement that

[1] The regulations at 37 C.F.R. §1.183 sets forth that waiver of the rules is "subject to such other requirements as may be imposed."

"the entire delay in filing the required reply from the due date for the reply until the filing of a grantable petition was unintentional." (The statement is in the form available online.)

Further correspondence with respect to this matter should be addressed as follows:[2]

By mail: Commissioner for Patents[3]
P.O. Box 1450
Alexandria, VA 22313-1450

By FAX: IFW Formal Filings
(571) 273-8300
ATTN.: Office of Petitions

By hand: Mail Stop: Petition
Customer Service Window
Randolph Building
401 Dulany Street
Alexandria, VA 22314

Telephone inquiries concerning this decision may be directed to the undersigned at (571) 272-3214.

John J. Gillon, Jr.
Senior Attorney
Office of Petitions

[2] On July 15, 2005, the Central Facsimile (FAX) Number changed to (571) 273-8300. The old FAX number no longer is in service and (571) 273-8300 will be the only facsimile number recognized for centralized delivery. (For further information. see: http://www.uspto.gov/web/offices/pac/dapp/opla/preognotice/cfax062005.pdf .)

[3] To determine the appropriate addresses for other subject-specific correspondence, refer to the USPTO Web site at www.uspto.gov.

UNITED STATES PATENT AND TRADEMARK OFFICE

Commissioner for Patents
United States Patent and Trademark Office
P.O. Box 1450
Alexandria, VA 22313-1450
www.uspto.gov

JJGJR.: 01-07

Paper No: __

FLIESLER MEYER, LLP
FOUR EMBARCADERO CENTER
SUITE 400
SAN FRANCISCO CA 94111

COPY MAILED

MAR 0 1 2007

OFFICE OF PETITIONS

In re Application of	:	
Beust, et al.	:	
Application No. 10/927,336	:	ON PETITION
Filed: 26 August, 2004	:	
Attorney Docket No. BEAS-01610US3		

This is a decision on the papers submitted and considered as a renewed petition filed on 28 June, 2006, under 37 C.F.R. §1.47(a).

The Office regrets the delay in addressing this matter, however, the petition was presented to the attorneys in the Office of Petitions only at this writing.

The petition under 37 C.F.R. §1.47(a) is **DISMISSED**.

BACKGROUND

The record indicates:

- the instant application was filed on 26 August, 2004, without, *inter alia*, a fully executed oath/declaration;

- on 25 October, 2004, the Office mailed a Notice of Missing Parts indicating, *inter alia*, that a fully executed oath/declaration was required within two months;

- on 12 May, 2005, Petitioner filed the original petition with, *inter alia*, a statement by Petitioner David T. Xue (Reg. No. 54,554), along with an oath/declaration containing the signature of named co-inventor White (for himself and on behalf of) but without the signature of named non-signing co-inventor Cedric Beust (Mr. Beust), a narration the statement of, and an averment that the oath or declaration was presented to Mr. Beust–however, the transmittal letter speaks only to the oath/declaration and assignment and thus does not demonstrate that the entire application (description, claims, abstract, drawings) was presented to the non-signing inventor Mr. Beust along with the oath or declaration, and so the petition was dismissed on 28 July, 2005, and Petitioner was given two months within which to reply;

- the instant papers suggest joinder in that it now appears that the oath/declaration has been signed by all inventors.

In view of the joinder of the inventors, further consideration under Rule 1.47(a) is not necessary and the petition is considered to be moot. This application does not have any Rule 1.47 status and no such status should appear on the file wrapper. This application need not be returned to this Office for any further consideration under Rule 1.47(a).

CONCLUSION

For the foregoing reasons, the instant petition is **dismissed as moot for joinder**.

This application is being released to OIPE for further processing as necessary before being returned to substantive examination in due course.

While telephone inquiries regarding this decision may be directed to the undersigned at (571) 272-3214, it is noted that all practice before the Office is in writing (see: 37 C.F.R. §1.2[10]) and the proper authority for action on any matter in this regard are the statutes (35 U.S.C.), regulations (37 C.F.R.) and the commentary on policy (MPEP). Therefore, no telephone discussion may be controlling or considered authority for Petitioner's action(s).

John J. Gillon, Jr.
Senior Attorney
Office of Petitions

[10] The regulations at 37 C.F.R. §1.2 provide:

§1.2 Business to be transacted in writing.

All business with the Patent and Trademark Office should be transacted in writing.The personal attendance of applicants or their attorneys or agents at the Patent and Trademark Office is unnecessary. The action of the Patent and Trademark Office will be based exclusively on the written record in the Office. No attention will be paid to any alleged oral promise, stipulation,or understanding in relation to which there is disagreement or doubt.

UNITED STATES PATENT AND TRADEMARK OFFICE

Commissioner for Patents
United States Patent and Trademark Office
P.O. Box 1450
Alexandria, VA 22313-1450
www.uspto.gov

JJGJR.: 01-07

Paper No: __

FLIESLER MEYER, LLP
FOUR EMBARCADERO CENTER
SUITE 400
SAN FRANCISCO CA 94111

COPY MAILED

MAR 0 1 2007

OFFICE OF PETITIONS

In re Application of	:	
Beust, et al.	:	
Application No. 10/927,336	:	ON PETITION
Filed: 26 August, 2004	:	
Attorney Docket No. BEAS-01610US3		

This is a decision on the papers submitted and considered as a renewed petition filed on 28 June, 2006, under 37 C.F.R. §1.137(b).

The Office regrets the delay in addressing this matter, however, the petition was presented to the attorneys in the Office of Petitions only at this writing.

The petition under 37 C.F.R. §1.137(b) is **GRANTED**.

BACKGROUND

The record indicates:

- the instant application was filed on 26 August, 2004, without, *inter alia*, a fully executed oath/declaration;

Application No. 10/927,336

- on 25 October, 2004, the Office mailed a Notice of Missing Parts indicating, *inter alia*, that a fully executed oath/declaration was required within two months;, and on 12 May, 2005, Petitioner filed a petition under 37 C.F.R. §1.47(a), which was dismissed on 28 July, 2005, for failing to satisfy regulatory requirements, and Petitioner was given two (2) months within which to refile to seek relief;

- Petitioner failed to re-petition timely and the Office mailed a Notice of Abandonment on 5 June, 2006;

- on 28 June, 2006, Petitioner submitted the instant petition to revive, a renewed petition under 37 C.F.R. §1.47(a) and papers suggesting joinder.

Petitioners always are reminded of the burden of those registered to practice *and* all others who make representations before the Office, *inter alia*, to inquire into the underlying facts of representations made to the Office.[1]

---

[1] See supplement of 17 June, 1999. The Patent and Trademark Office is relying on petitioner's duty of candor and good faith and accepting a statement made by Petitioner. See Changes to Patent Practice and Procedure, 62 Fed. Reg. at 53160 and 53178, 1203 Off. Gaz. Pat. Office at 88 and 103 (responses to comments 64 and 109)(applicant obligated under 37 C.F.R. §10.18 to inquire into the underlying facts and circumstances when providing statements to the Patent and Trademark Office).

Specifically, the regulations at 37 C.F.R. §10.18 provide:

§ 10.18 Signature and certificate for correspondence filed in the Patent and Trademark Office.
(a) For all documents filed in the Office in patent, trademark, and other non-patent matters, except for correspondence that is required to be signed by the applicant or party, each piece of correspondence filed by a practitioner in the Patent and Trademark Office must bear a signature by such practitioner complying with the provisions of §1.4(d), §1.4(e), or § 2.193(c)(1) of this chapter.
(b) By presenting to the Office (whether by signing, filing, submitting, or later advocating) any paper, the party presenting such paper, whether a practitioner or non-practitioner, is certifying that—

(1) All statements made therein of the party's own knowledge are true, all statements made therein on information and belief are believed to be true, and all statements made therein are made with the knowledge that whoever, in any matter within the jurisdiction of the Patent and Trademark Office, knowingly and willfully falsifies, conceals, or covers up by any trick, scheme, or device a material fact, or makes any false, fictitious or fraudulent statements or representations, or makes or uses any false writing or document knowing the same to contain any false, fictitious or fraudulent statement or entry, shall be subject to the penalties set forth under 18 U.S.C. 1001, and that violations of this paragraph may jeopardize the validity of the application or document, or the validity or enforceability of any patent, trademark registration, or certificate resulting therefrom; and

(2) To the best of the party's knowledge, information and belief, formed after an inquiry reasonable under the circumstances, that —

(i) The paper is not being presented for any improper purpose, such as to harass someone or to cause unnecessary delay or needless increase in the cost of prosecution before the Office;

(ii) The claims and other legal contentions therein are warranted by existing law or by a nonfrivolous argument for the extension, modification, or reversal of existing law or the establishment of new law;

(iii) The allegations and other factual contentions have evidentiary support or, if specifically so identified, are likely to have evidentiary support after a reasonable opportunity for further investigation or discovery; and

(iv) The denials of factual contentions are warranted on the evidence, or if specifically so identified, are reasonably based on a lack of information or belief.

(c) Violations of paragraph (b)(1) of this section by a practitioner or non-practitioner may jeopardize the validity of the application or document, or the validity or enforceability of any patent, trademark registration, or certificate resulting therefrom. Violations of any of paragraphs (b)(2)(i) through (iv) of this section are, after notice and reasonable opportunity to respond, subject to such sanctions as deemed appropriate by the Commissioner, or the Commissioner's designee, which may include, but are not limited to, any combination of —

(1) Holding certain facts to have been established;

STATUTES, REGULATIONS AND ANALYSIS

Congress has authorized the Commissioner to "revive an application if the delay is shown to the satisfaction of the Commissioner to have been "unavoidable." 35 U.S.C. §133 (1994).[2]

The regulations at 37 C.F.R. §1.137(a) and (b) set forth the requirements for a petitioner to revive a previously unavoidably or unintentionally, respectively, abandoned application under this congressional grant of authority. The language of 35 U.S.C. §133 and 37 C.F.R. §1.137(a) is clear, unambiguous, and without qualification: the delay in tendering the reply to the outstanding Office action, as well as filing the first petition seeking revival, must have been unavoidable for the reply now to be accepted on petition.[3]

Delays in responding properly raise the question whether delays are unavoidable.[4] Where there is a question whether the delay was unavoidable, Petitioners must meet the burden of establishing that the delay was unavoidable within the meaning of 35 U.S.C. §133 and 37 C.F.R. §1.137(a).[5] And the Petitioner must be diligent in attending to the matter.[6] Failure to do so does not constitute the care required under Pratt, and so cannot satisfy the test for diligence and due care.

(By contrast, unintentional delays are those that do not satisfy the very strict statutory and

---

(2) Returning papers;
(3) Precluding a party from filing a paper, or presenting or contesting an issue;
(4) Imposing a monetary sanction;
(5) Requiring a terminal disclaimer for the period of the delay; or
(6) Terminating the proceedings in the Patent and Trademark Office.

(d) Any practitioner violating the provisions of this section may also be subject to disciplinary action. See § 10.23(c)(15).
[Added 50 FR 5175, Feb. 6, 1985, effective Mar. 8, 1985; para. (a) revised, 58 FR 54494, Oct. 22, 1993, effective Nov. 22, 1993; paras. (a) & (b) revised, paras. (c) & (d) added, 62 FR 53131, Oct. 10, 1997, effective Dec. 1, 1997; para. (a) revised, 69 FR 56481, Sept. 21, 2004, effective Oct. 21, 2004]

[2] 35 U.S.C. §133 provides:
35 U.S.C. §133 Time for prosecuting application.
Upon failure of the applicant to prosecute the application within six months after any action therein, of which notice has been given or mailed to the applicant, or within such shorter time, not less than thirty days, as fixed by the Commissioner in such action, the application shall be regarded as abandoned by the parties thereto, unless it be shown to the satisfaction of the Commissioner that such delay was unavoidable.

[3] Therefore, by example, an unavoidable delay in the payment of the Filing Fee might occur if a reply is shipped by the US Postal Service, but due to catastrophic accident, the delivery is not made.

[4] See: *Changes to Patent Practice and Procedure*; *Final Rule Notice*, 62 *Fed. Reg.* at 53158-59 (October 10, 1997), 1203 *Off. Gaz. Pat. Office* at 86-87 (October 21, 1997).

[5] See: In re Application of G, 11 USPQ2d 1378, 1380 (Comm'r Pats. 1989).

[6] See: Diligence in Filing Petitions to Revive and Petitions to Withdraw the Holding of Abandonment, 1124 Off. Gaz. Pat. Office 33 (March 19, 1991). It was and is Petitioner's burden to exercise diligence in seeking either to have the holding of abandonment withdrawn or the application revived. See 1124 Off. Gaz. Pat. Office supra.

regulatory requirements of unavoidable delay, and also, by definition, are not intentional.[7]))

Allegations as to
Unintentional Delay

The requirements for a grantable petition under 37 C.F.R. §1.137(b) are the petition and fee, a statement/showing of unintentional delay, a proper reply, and–where appropriate--a terminal disclaimer and fee.

Petitioner appear to have satisfied the requirements under the regulation.

CONCLUSION

The petition as considered under 37 C.F.R. §1.137(b) is **granted**.

The application is released to OIPE for further processing in due course.

While telephone inquiries regarding this decision may be directed to the undersigned at (571) 272-3214, it is noted that all practice before the Office is in writing (see: 37 C.F.R. §1.2[8]) and the proper authority for action on any matter in this regard are the statutes (35 U.S.C.), regulations (37 C.F.R.) and the commentary on policy (MPEP). Therefore, no telephone discussion may be controlling or considered authority for Petitioner's action(s).

John J. Gillon, Jr.
Senior Attorney
Office of Petitions

---

[7] Therefore, by example, an unintentional delay in the reply might occur if the reply and transmittal form are to be prepared for shipment by the US Postal Service, but other pressing matters distract one's attention and the mail is not timely deposited for shipment.

[8] The regulations at 37 C.F.R. §1.2 provide:
§1.2 Business to be transacted in writing.
All business with the Patent and Trademark Office should be transacted in writing.The personal attendance of applicants or their attorneys or agents at the Patent and Trademark Office is unnecessary. The action of the Patent and Trademark Office will be based exclusively on the written record in the Office. No attention will be paid to any alleged oral promise, stipulation,or understanding in relation to which there is disagreement or doubt.

SPE RESPONSE FOR CERTIFICATE OF CORRECTION

DATE : 8/4/09

Paper No.: —

TO SPE OF : ART UNIT 2192

SUBJECT : Request for Certificate of Correction for Appl. No.: 10/927336 Patent No.: 7546579 B2

Please respond to this request for a certificate of correction within 7 days.

FOR IFW FILES:

Please review the requested changes/corrections as shown in the **COCIN** document(s) in the IFW application image. No new matter should be introduced, nor should the scope or meaning of the claims be changed.

Please complete the response (see below) and forward the completed response to scanning using document code **COCX**.

FOR PAPER FILES:

Please review the requested changes/corrections as shown in the attached certificate of correction. Please complete this form (see below) and forward it with the file to:

Certificates of Correction Branch (C of C)
Randolph Square 9D62-B
Palm Location 7580

Virginia Tolbert
Certificates of Correction Branch
703-756-1591

Thank You For Your Assistance

The request for issuing the above-identified correction(s) is hereby:
Note your decision on the appropriate box.

- ☒ **Approved** — All changes apply.
- ☐ **Approved in Part** — Specify below which changes **do not** apply.
- ☐ **Denied** — State the reasons for denial below.

Comments: _____

TUAN DAM
SUPERVISORY PATENT EXAMINER

SPE

2192
Art Unit

SPE RESPONSE FOR CERTIFICATE OF CORRECTION

DATE : 5/11/10

Paper No.: —

TO SPE OF : ART UNIT 2192

SUBJECT : Request for Certificate of Correction for Appl. No.: 10/927336 Patent No.: 7546579 B2

Please respond to this request for a certificate of correction within 7 days.

FOR IFW FILES:

Please review the requested changes/corrections as shown in the **COCIN** document(s) in the IFW application image. No new matter should be introduced, nor should the scope or meaning of the claims be changed.

Please complete the response (see below) and forward the completed response to scanning using document code **COCX**.

FOR PAPER FILES:

Please review the requested changes/corrections as shown in the attached certificate of correction. Please complete this form (see below) and forward it with the file to:

Certificates of Correction Branch (CofC)
Randolph Square – 9D10-A
Palm Location 7580

Virginia Tolbert
Certificates of Correction Branch
571-272-0460

Thank You For Your Assistance

The request for issuing the above-identified correction(s) is hereby:
Note your decision on the appropriate box.

- ☑ **Approved** — All changes apply.
- ☐ **Approved in Part** — Specify below which changes **do not** apply.
- ☐ **Denied** — State the reasons for denial below.

Comments: _____

TUAN DAM
SUPERVISORY PATENT EXAMINER 5/24/10

UNITED STATES PATENT AND TRADEMARK OFFICE

Commissioner for Patents
United States Patent and Trademark Office
P.O. Box 1450
Alexandria, VA 22313-1450
www.uspto.gov

KOLISCH HARTWELL, P.C.
520 SW YAMHILL STREET, Suite 200
PORTLAND, OR 97204

COPY MAILED

MAR 0 6 2008

OFFICE OF PETITIONS

ON PETITION

In re Application of :
Richard R. Heuser :
Application No. 10/927,340 :
Filed: August 25, 2004 :
Attorney Docket No. HEU 310 :

This is a decision on the petition, filed March 5, 2008, under 37 CFR 1.313(c)(2) to withdraw the above-identified application from issue after payment of the issue fee. This is also a decision on the petition under 37 CFR 1.78(a)(6), filed March 5, 2008, to accept an unintentionally delayed claim under 35 U.S.C. §119(e) for the benefit of the prior-filed provisional application set forth in the concurrently filed amendment

The petition under 37 CFR 1.313(c)(2) is **GRANTED**.

The above-identified application is withdrawn from issue for consideration of a submission under 37 CFR 1.114 (request for continued examination). See 37 CFR 1.313(c)(2).

Petitioner is advised that the issue fee paid on March 5, 2008, in the above-identified application cannot be refunded. If, however, the above-identified application is again allowed, petitioner may request that it be applied towards the issue fee required by the new Notice of Allowance.[1]

As to the petition under 37 CFR 1.78(a)(6):

A petition under 37 CFR 1.78(a)(6) is only applicable to those applications filed on or after November 29, 2000. Further, the petition is appropriate only after expiration of the period specified in 37 CFR 1.78(a)(5)(ii) and must be filed during the pendency of the nonprovisional application. In addition, the petition must be accompanied by:

(1) the reference required by 35 U.S.C. § 119(e) and 37 CFR 1.78(a)(5)(i) to the prior-filed application, unless previously submitted;

(2) the surcharge set forth in § 1.17(t); and

[1] *The request to apply the issue fee to the new Notice may be satisfied by completing and returning the new Part B - Fee(s) Transmittal Form (along with any balance due at the time of submission). Petitioner is advised that the Issue Fee Transmittal Form must be completed and timely submitted to avoid abandonment of the application.*

(3) a statement that the entire delay between the date the claim was due under 37 CFR 1.78(a)(5)(ii) and the date the claim was filed was unintentional. The Director may require additional information where there is a question whether the delay was unintentional.

Additionally, the instant nonprovisional application must be pending at the time of filing of the reference to the prior-filed provisional application as required by 37 CFR 1.78(a)(5)(ii). Further, the nonprovisional application claiming the benefit of the prior-filed provisional application must have been filed within twelve months of the filing date of the prior-filed provisional application.

All of the above requirements having been satisfied, the late claim for priority under 35 U.S.C. § 119(e) is accepted as being unintentionally delayed.

The granting of the petition to accept the delayed benefit claim to the prior-filed application under 37 CFR 1.78(a)(6) should not be construed as meaning that this application is entitled to the benefit of the filing date of the prior-filed application. In order for this application to be entitled to the benefit of the prior-filed application, all other requirements under 35 U.S.C. §119(e) and 37 CFR 1.78(a)(4) and (a)(5) must be met. Similarly, the fact that the corrected Filing Receipt accompanying this decision on petition includes the prior-filed application should not be construed as meaning that applicant is entitled to the claim for benefit of priority to the prior-filed application noted thereon. Accordingly, the examiner will, in due course, consider this benefit claim and determine whether the application is entitled to the benefit of the earlier filing date.

A corrected Filing Receipt, which includes the priority claim to the prior-filed provisional application, accompanies this decision on petition.

Any inquiries concerning this decision may be directed to the undersigned at (571) 272-3204. All other inquiries concerning either the examination procedures or status of the application should be directed to the Technology Center.

The application is being forwarded to Technology Center AU 3736 for further processing of the RCE under 37 CFR 1.114 filed March 6, 2008, including consideration by the examiner of the claim under 35 U.S.C. §119(e) for the benefit of priority to the prior-filed provisional application.

Sherry D. Brinkley
Petitions Examiner
Office of Petitions

ATTACHMENT: Corrected Filing Receipt

UNITED STATES PATENT AND TRADEMARK OFFICE

UNITED STATES DEPARTMENT OF COMMERCE
United States Patent and Trademark Office
Address: COMMISSIONER FOR PATENTS
P.O. Box 1450
Alexandria, Virginia 22313-1450
www.uspto.gov

APPLICATION NUMBER	FILING or 371(c) DATE	GRP ART UNIT	FIL FEE REC'D	ATTY.DOCKET.NO	TOT CLAIMS	IND CLAIMS
10/927,340	08/25/2004	3736	879	HEU 310	14	6

CONFIRMATION NO. 9776

CORRECTED FILING RECEIPT

23581
KOLISCH HARTWELL, P.C.
520 SW YAMHILL STREET, Suite 200
PORTLAND, OR 97204

OC000000028694731

Date Mailed: 03/07/2008

Receipt is acknowledged of this non-provisional patent application. The application will be taken up for examination in due course. Applicant will be notified as to the results of the examination. Any correspondence concerning the application must include the following identification information: the U.S. APPLICATION NUMBER, FILING DATE, NAME OF APPLICANT, and TITLE OF INVENTION. Fees transmitted by check or draft are subject to collection. Please verify the accuracy of the data presented on this receipt. **If an error is noted on this Filing Receipt, please write to the Office of Initial Patent Examination's Filing Receipt Corrections. Please provide a copy of this Filing Receipt with the changes noted thereon. If you received a "Notice to File Missing Parts" for this application, please submit any corrections to this Filing Receipt with your reply to the Notice. When the USPTO processes the reply to the Notice, the USPTO will generate another Filing Receipt incorporating the requested corrections**

Applicant(s)

Richard R. Heuser, Phoenix, AZ;

Power of Attorney: The patent practitioners associated with Customer Number 23581

Domestic Priority data as claimed by applicant

This appln claims benefit of 60/498,427 08/27/2003

Foreign Applications

If Required, Foreign Filing License Granted: 10/22/2004

The country code and number of your priority application, to be used for filing abroad under the Paris Convention, is **US 10/927,340**

Projected Publication Date: Not Applicable

Non-Publication Request: No

Early Publication Request: No
**** SMALL ENTITY ****

Title

CATHETER GUIDEWIRE SYSTEM USING CONCENTRIC WIRES

Preliminary Class

600

PROTECTING YOUR INVENTION OUTSIDE THE UNITED STATES

Since the rights granted by a U.S. patent extend only throughout the territory of the United States and have no effect in a foreign country, an inventor who wishes patent protection in another country must apply for a patent in a specific country or in regional patent offices. Applicants may wish to consider the filing of an international application under the Patent Cooperation Treaty (PCT). An international (PCT) application generally has the same effect as a regular national patent application in each PCT-member country. The PCT process **simplifies** the filing of patent applications on the same invention in member countries, but **does not result** in a grant of "an international patent" and does not eliminate the need of applicants to file additional documents and fees in countries where patent protection is desired.

Almost every country has its own patent law, and a person desiring a patent in a particular country must make an application for patent in that country in accordance with its particular laws. Since the laws of many countries differ in various respects from the patent law of the United States, applicants are advised to seek guidance from specific foreign countries to ensure that patent rights are not lost prematurely.

Applicants also are advised that in the case of inventions made in the United States, the Director of the USPTO must issue a license before applicants can apply for a patent in a foreign country. The filing of a U.S. patent application serves as a request for a foreign filing license. The application's filing receipt contains further information and guidance as to the status of applicant's license for foreign filing.

Applicants may wish to consult the USPTO booklet, "General Information Concerning Patents" (specifically, the section entitled "Treaties and Foreign Patents") for more information on timeframes and deadlines for filing foreign patent applications. The guide is available either by contacting the USPTO Contact Center at 800-786-9199, or it can be viewed on the USPTO website at http://www.uspto.gov/web/offices/pac/doc/general/index.html.

For information on preventing theft of your intellectual property (patents, trademarks and copyrights), you may wish to consult the U.S. Government website, http://www.stopfakes.gov. Part of a Department of Commerce initiative, this website includes self-help "toolkits" giving innovators guidance on how to protect intellectual property in specific countries such as China, Korea and Mexico. For questions regarding patent enforcement issues, applicants may call the U.S. Government hotline at 1-866-999-HALT (1-866-999-4158).

LICENSE FOR FOREIGN FILING UNDER

Title 35, United States Code, Section 184

Title 37, Code of Federal Regulations, 5.11 & 5.15

GRANTED

The applicant has been granted a license under 35 U.S.C. 184, if the phrase "IF REQUIRED, FOREIGN FILING LICENSE GRANTED" followed by a date appears on this form. Such licenses are issued in all applications where the conditions for issuance of a license have been met, regardless of whether or not a license may be required as

set forth in 37 CFR 5.15. The scope and limitations of this license are set forth in 37 CFR 5.15(a) unless an earlier license has been issued under 37 CFR 5.15(b). The license is subject to revocation upon written notification. The date indicated is the effective date of the license, unless an earlier license of similar scope has been granted under 37 CFR 5.13 or 5.14.

This license is to be retained by the licensee and may be used at any time on or after the effective date thereof unless it is revoked. This license is automatically transferred to any related applications(s) filed under 37 CFR 1.53(d). This license is not retroactive.

The grant of a license does not in any way lessen the responsibility of a licensee for the security of the subject matter as imposed by any Government contract or the provisions of existing laws relating to espionage and the national security or the export of technical data. Licensees should apprise themselves of current regulations especially with respect to certain countries, of other agencies, particularly the Office of Defense Trade Controls, Department of State (with respect to Arms, Munitions and Implements of War (22 CFR 121-128)); the Bureau of Industry and Security, Department of Commerce (15 CFR parts 730-774); the Office of Foreign AssetsControl, Department of Treasury (31 CFR Parts 500+) and the Department of Energy.

NOT GRANTED

No license under 35 U.S.C. 184 has been granted at this time, if the phrase "IF REQUIRED, FOREIGN FILING LICENSE GRANTED" DOES NOT appear on this form. Applicant may still petition for a license under 37 CFR 5.12, if a license is desired before the expiration of 6 months from the filing date of the application. If 6 months has lapsed from the filing date of this application and the licensee has not received any indication of a secrecy order under 35 U.S.C. 181, the licensee may foreign file the application pursuant to 37 CFR 5.15(b).

UNITED STATES PATENT AND TRADEMARK OFFICE

Commissioner for Patents
United States Patent and Trademark Office
P.O. Box 1450
Alexandria, VA 22313-1450
www.uspto.gov

ALSTON & BIRD LLP
BANK OF AMERICA PLAZA
101 SOUTH TRYON ST
SUITE 4000
CHARLOTTE NC 28280-4000

COPY MAILED
JUL 21 2005
OFFICE OF PETITIONS

In re Application of	:	
Hunter, et al.	:	
Application No. 10/927,429	:	DECISION REFUSING
Filing Date: August 25, 2004	:	STATUS UNDER § 1.47(a)
Attorney Docket No. 046125/282162	:	

This is in response to the "PETITION UNDER 37 C.F.R. §1.47(a) TO ACCEPT DECLARATION WITHOUT SIGNATURE OF INVENTOR REFUSING TO SIGN DECLARATION IN RESPONSE TO NOTICE TO FILE MISSING PARTS," filed June 6, 2005, which is being treated as a petition under 37 CFR 1.47(a).[1]

The petition under 37 CFR 1.47(a) is **DISMISSED**.

Rule 47 applicant is given TWO MONTHS from the mailing date of this decision to reply, correcting the below-noted deficiencies. Any reply should be entitled "Request for Reconsideration of Petition Under 37 CFR 1.47(a)," and should only address the deficiencies noted below, except that the reply may include an oath or declaration executed by the non-signing inventors. **Failure to respond will result in abandonment of the application.** Any extensions of time will be governed by 37 CFR 1.136(a).

---

[1] A petition under 37 CFR 1.47(b) is only applicable when **all** of the inventors refuse to execute the application for patent.

The above-identified application was filed on August 25, 2004, without an executed oath or declaration. Accordingly, a Notice to File Missing Parts of Nonprovisional Application was mailed on December 6, 2004. This Notice set an extendable period for reply of two months for applicants to submit the statutory basic filing fee, an executed oath or declaration, and a surcharge for their late filing. On June 6, 2005, applicants filed the instant petition, made timely by obtaining a four month extension of time. Accompanying the petition was a declaration executed by inventors Ned Moritz Hunter, Mark Allan Thomson, Monique Ennis, Jianbo Stancil, and Linda Postenrieder, but with the signature block for inventor Nandu Nandakumar left blank.

A grantable petition under 37 CFR 1.47(a) requires: (1) proof that the non-signing inventor(s) cannot be reached or refuses to sign the oath or declaration after having been presented with the application papers (specification, claims and drawings); (2) an acceptable oath or declaration in compliance with 37 CFR 1.63; (3) the petition fee; and (4) a statement of the last known address of the non-signing inventor(s). The instant petition does not satisfy requirement (1).

As to requirement (1), there has been no showing that inventor Nandakumar was presented with the application papers (specification, claims, drawings, oath or declaration). Rather, the petition only establishes that Nandakumar was forwarded a copy of the declaration. Regarding this, the Manual of Patent Examining Procedure states:

> A refusal by an inventor to sign an oath or declaration when the inventor has not been presented with the application papers does not itself suggest that the inventor is refusing to join the application unless it is clear that the inventor understands exactly what he or she is being asked to sign and refuses to accept the application papers.
>
> It is reasonable to require that the inventor be presented with the application papers before a petition under 37 CFR 1.47 is granted since such a procedure ensures that the inventor is apprised of the application to which the oath or declaration is directed. In re Gray, 115 U.S.P.Q. 80 Comm'r Pat. 1956).

Proof that a *bona fide* attempt was made to present a copy of the application papers (specification, including claims, drawings, and oath or declaration) to the nonsigning inventor for signature, but the inventor refused to accept delivery of the

papers or expressly stated that the application papers should not be sent, may be sufficient.[2] If Nandakumar was in fact presented with the application papers, that fact can simply be stated on the record upon the filing of a renewed petition.

Further correspondence with respect to this matter should be addressed as follows:

By mail: Mail Stop Petitions
Commissioner for Patents
P.O. Box 1450
Alexandria VA 22313-1450

By FAX: (571)273-8300
Attn: Office of Petitions

Telephone inquiries concerning this decision may be directed to the undersigned at (571)272-3207.

Cliff Congo
Petitions Attorney
Office of Petitions

[2] MPEP 409.03(d).

UNITED STATES PATENT AND TRADEMARK OFFICE

Commissioner for Patents
United States Patent and Trademark Office
P.O. Box 1450
Alexandria, VA 22313-1450
www.uspto.gov

ALSTON & BIRD LLP
BANK OF AMERICA PLAZA
101 SOUTH TRYON ST
SUITE 4000
CHARLOTTE NC 28280-4000

COPY MAILED

NOV 14 2005

OFFICE OF PETITIONS

In re Application of	:	
Hunter, et al.	:	
Application No. 10/927,429	:	DECISION ACCORDING
Filing Date: August 25, 2004	:	STATUS UNDER § 1.47(a)
Attorney Docket No. 046125/282162	:	

This is in response to the "REQUEST FOR RECONSIDERATION OF PETITION UNDER 37 C.F.R. 1.47(a)", filed September 15, 2005.

The petition under 37 CFR 1.47(a) is **GRANTED**.

The above-identified application was filed on August 25, 2004, without an executed oath or declaration. Accordingly, a Notice to File Missing Parts of Nonprovisional Application was mailed on December 6, 2004. This Notice set an extendable period for reply of two months for applicants to submit the statutory basic filing fee, an executed oath or declaration, and a surcharge for their late filing.

On June 6, 2005, applicants filed a petition under 37 CFR 1.47(a), made timely by obtaining a four month extension of time. Accompanying the petition was a declaration executed by inventors Ned Moritz Hunter, Mark Allan Thomson, Monique Ennis, Jianbo Stancil, and Linda Postenrieder, but with the signature block for inventor Nandu Nandakumar left blank.

However, the petition was dismissed in a decision mailed on July 21, 2005. Petitioner had not demonstrated that inventor Kandakumar was presented with the application papers (specification, claims, drawings, oath or declaration). Rather, petitioner only established that Nandakumar was forwarded a copy of the declaration.

With the instant petition, petitioner has overcome the objection set forth in the decision mailed July 21, 2005. Accordingly, the above-identified application is hereby accorded Rule 1.47(a) status.

As provided in 37 CFR 1.47(c), this Office will forward notice of this application's filing to the non-signing inventor at the address given in the petition. Notice of the filing of this application will also be published in the Official Gazette.

The application file is being forwarded to Group Art Unit 3623 for examination in due course.

Telephone inquiries concerning this decision may be directed to the undersigned at (571)272-3207.

Cliff Congo
Petitions Attorney
Office of Petitions

UNITED STATES PATENT AND TRADEMARK OFFICE

Commissioner for Patents
United States Patent and Trademark Office
P.O. Box 1450
Alexandria, VA 22313-1450
www.uspto.gov

NANDU NANDAKUMAR
1050 CROWN POINTE PARKWAY
SUITE 1405
ATLANTA GA 30338

COPY MAILED

NOV 14 2005

OFFICE OF PETITIONS

In re Application of :
Ned Moritz Hunter, Mark Alan Thomson, :
Nandu Nandakumar, Monique Ennis, :
Jianbo Stancil, Linda Postenrieder :
Application No. 10/927,429 :
Filed: August 25, 2004
Title: System for Assisting User with Task Involving Form, and Related Apparatuses, Methods, and Computer-Readable Media

LETTER

Dear Mr. Nandakumar:

You are named as a joint inventor in the above-identified United States patent application filed under the provisions of 35 USC 116 (United States Code) and 37 CFR 1.47(a), Rules of Practice in Patent Cases. Should a patent be granted on the application you will be designated therein as a joint inventor.

As a named inventor you are entitled to inspect any paper in the file wrapper of the application, order copies of all or any part thereof (at a prepaid cost per 37 CFR 1.19) or make your position of record in the application. Alternatively, you may arrange to do any of the preceding through a registered patent attorney or agent presenting written authorization from you. If you care to join the application, agent of record (see below) would presumably assist you. Joining in the application would entail the filing of an appropriate oath or declaration by you pursuant to 37 CFR 1.63.

Telephone inquiries regarding this communication should be directed to Petitions Attorney Cliff Congo at (571)272-3207. Requests for information regarding your application should be directed to the File Information Unit at (703) 308-2733. Information regarding how to pay for and order a copy of the application, or a specific paper in the application, should be directed to the Certification Division at (703) 308-9726 or 1-800-972-6382 (outside the Washington D.C. area).

Cliff Congo
Petitions Attorney
Office of Petitions

Jon M. Jurgovan
Alston & Bird LLP
Bank of America Building
101 South Tryon St
Suite 4000
Charlotte, NC 28280
404-881-7000

UNITED STATES PATENT AND TRADEMARK OFFICE

COMMISSIONER FOR PATENTS
UNITED STATES PATENT AND TRADEMARK OFFICE
P.O. BOX 1450
ALEXANDRIA, VA 22313-1450
www.uspto.gov

CHARLES HAUFF, ESQ.
SNELL AND WILMER L.L.P.
ONE ARIZONA CENTER
PHOENIX AZ 85004-2202

COPY MAILED

NOV 17 2005

OFFICE OF PETITIONS

In re Application of	:	
Coppinger et al.	:	
Application No. 10/927,430	:	DECISION ON PETITION
Filed: 25 August, 2004	:	
Atty Docket No. 64196.00020	:	

This is a decision on the petition under 37 CFR 1.78(a)(6), filed 11 October, 2005, to accept an unintentionally delayed claim under 35 U.S.C. §119(e) for the benefit of the prior-filed provisional application set forth in the amendment filed on 11 October, 2004.

The petition is **GRANTED**.

A petition under 37 CFR 1.78(a)(6) is only applicable to those applications filed on or after November 29, 2000. Further, the petition is appropriate only after expiration of the period specified in 37 CFR 1.78(a)(5)(ii) and must be filed during the pendency of the nonprovisional application. In addition, the petition must be accompanied by:

> **(1)** the reference required by 35 U.S.C. § 119(e) and 37 CFR 1.78(a)(5)(i) to the prior-filed application, unless previously submitted;
> **(2)** the surcharge set forth in § 1.17(t); and
> **(3)** a statement that the entire delay between the date the claim was due under 37 CFR 1.78(a)(5)(ii) and the date the claim was filed was unintentional. The Commissioner may require additional information where there is a question whether the delay was unintentional.

The instant nonprovisional application was filed after November 29, 2000, and the claim herein for the benefit of priority to the prior-filed provisional application is submitted after expiration

of the period specified in 37 CFR 1.78(a)(5)(ii). Therefore, this is a proper petition under 37 CFR 1.78(a)(6).

The petition complies with the requirements for a grantable petition under 37 CFR 1.78(a)(6) in that (1) a reference to the prior-filed provisional application has been included in an amendment to the first sentence of the specification following the title, as provided by 37 CFR 1.78(a)(5)(iii); (2) the surcharge fee required by 37 CFR 1.17(t) has been submitted; and (3) the petition contains a proper statement of unintentional delay. Accordingly, having found that the instant petition for acceptance of an unintentionally delayed claim for the benefit of priority under 35 U.S.C. § 119(e) to the prior-filed provisional application satisfies the conditions of 37 CFR 1.78(a)(6), the petition is granted.

The granting of the petition to accept the delayed benefit claim to the prior-filed application under 37 CFR 1.78(a)(6) should not be construed as meaning that the instant application is entitled to the benefit of the filing date of the prior-filed application. In order for the instant application to be entitled to the benefit of the prior-filed application, all other requirements under 35 U.S.C. §119(e) and 37 CFR 1.78(a)(4) and (a)(5) must be met. Similarly, the fact that the corrected Filing Receipt accompanying this decision on petition includes the prior-filed application should not be construed as meaning that applicant is entitled to the claim for benefit of priority to the prior-filed application noted thereon. Accordingly, the examiner will, in due course, consider this benefit claim and determine whether the instant application is entitled to the benefit of the earlier filing date.

A corrected Filing Receipt, which includes the priority claim to the prior-filed provisional application, accompanies this decision on petition.

The address in the petition is different than the correspondence address. A courtesy copy of this decision is being mailed to the address listed

Any inquiries concerning this decision may be directed to Senior Petitions Attorney Douglas I. Wood at (571) 272-3231. All other inquiries concerning either the examination procedures or status of the application should be directed to the Technology Center.

The application is being forwarded to Technology Center AU 2153 for appropriate action on the amendment submitted 11 October, 2005, including consideration by the examiner of the claim under 35 U.S.C. §119(e) for the benefit of priority to prior-filed provisional Application No. 60/181,416.

Frances Hicks

Frances M. Hicks
Lead Paralegal
Office of Petitions
Office of the Deputy Commissioner
for Patent Examination Policy

ATTACHMENT: Corrected Filing Receipt

SPE RESPONSE FOR CERTIFICATE OF CORRECTION

Paper No.: _____

DATE : 06/17/09

TO SPE OF : ART UNIT 1643

SUBJECT : Request for Certificate of Correction for Appl. No.: 10/927,433 Patent No.: 7,256004

Please respond to this request for a certificate of correction within 7 days.

FOR IFW FILES:

Please review the requested changes/corrections as shown in the **COCIN** document(s) in the IFW application image. No new matter should be introduced, nor should the scope or meaning of the claims be changed.

Please complete the response (see below) and forward the completed response to scanning using document code **COCX**.

FOR PAPER FILES:

Please review the requested changes/corrections as shown in the attached certificate of correction. Please complete this form (see below) and forward it with the file to:

Certificates of Correction Branch (CofC)

Randolph Square
Palm Location 7580

Should the changes be made **Valerie Jackson** **Certificates of Correction Branch**

703-756-1573

Thank You For Your Assistance

The request for issuing the above-identified correction(s) is hereby:
Note your decision on the appropriate box.

XApproved	**All** changes apply.
Approved in Part	Specify below which changes **do not** apply.
Denied	State the reasons for denial below.

Comments:

SPE RESPONSE FOR CERTIFICATE OF CORRECTION

/Larry R. Helms/ SPE AU 1643 6/17/09

SPE Art Unit

SPE RESPONSE FOR CERTIFICATE OF CORRECTION

Paper No.: X

DATE : **February 26, 2008**

TO SPE OF : ART UNIT **2826**

SUBJECT : Request for Certificate of Correction for Appl. No.: **10/927434** Patent No.: **7109551 B2**

A response is requested with respect to a request for a certificate of correction.

With respect to the change(s) requested to correct Office and/or Applicant's errors, should the patent read as shown in the certificate of correction attached herewith or the COCIN document(s), in IFW images for the above-identified patented application? No new matter should be introduced, nor should the scope or meaning of the claims be changed.

If the response is for an IFW within 7 days, please complete and forward the response to the employee (named below) via scanning into application images using document code COCX.

DO NOT SENT TO ATTORNEY

If the response is for a paper file wrapper, please complete the response and forward the response with the paper file wrapper, to the employee (named below), within **7** days, to:

Certificates of Correction Branch (CofC)
South Tower - 9A22
Palm Location 7580

Return of the Director's SPE response to 571-270-8001

LAMONTE NEWSOME
Certificates of Correction Branch
703-308-9390 ext. 112

Thank You For Your Assistance

The request for issuing the above-identified correction(s) is hereby:
Note your decision on the appropriate box.

☒ **Approved**	**All** changes apply.
☐ **Approved in Part**	Specify below which changes **do not** apply.
☐ **Denied**	State the reasons for denial below.

Comments: _____

_____

_____

_____

_____

/Sue Purvis/	2826
SPE	**Art Unit**

PAGE 2/2 * RCVD AT 2/28/2008 12:15:22 PM [Eastern Standard Time] * SVR:USPTO-EFXRF-6/0 * DNIS:2709990 * CSID:USPTO * DURATION (mm-ss):00-00

UNITED STATES PATENT AND TRADEMARK OFFICE

COMMISSIONER FOR PATENTS
UNITED STATES PATENT AND TRADEMARK OFFICE
P.O. BOX 1450
ALEXANDRIA, VA 22313-1450
www.uspto.gov

MAIL

APR 2 5 2005

DIRECTOR OFFICE
TECHNOLOGY CENTER 2600

Mark J. Thronson
DICKSTEIN SHAPIRO MORIN & OSHINSKY LLP
2101 L Street NW
Washington DC 20037-1526

In re Application of :
WATABE, TERUYASU :
Application No. 10/927,440 :
Filed: August 27, 2004 :
For: **OPTICAL INFORMATION RECORDING APPARATUS, INFORMATION PROCESSING APPARATUS, OPTICAL INFORMATION RECORDING MEDIUM, OPTICAL INFORMATION RECORDING METHOD, AND COMPUTER-READABLE STORAGE MEDIUM** :

DECISION ON PETITION
TO MAKE SPECIAL

This is a decision on the petition filed March 8, 2005 under Manual of Patent Examination Procedure §708.02, VIII requesting accelerated examination.

The petition under Manual of Patent Examination Procedure §708.02, VIII, must:
(1) be filed prior to receiving any examination by the examiner,
(2) be accompanied by the required fee- $130,
(3) the claims should be directed to a single invention (if it is determined that the claims pertain to more than one invention, then applicant will have to make an election without traverse or forfeit accelerated examination status),
(4) state that a pre-examination search was made, and fully discuss the search method employed, such as classes and subclasses searched, publications, Chemical abstracts, patents, etc. A search made by a foreign patent office satisfies this requirement,
(5) be accompanied by a copy of each of the references most closely related to the subject matter encompassed by the claims if said references are not already of record,
(6) fully discuss the references, pointing out with the particularity required by 37 C.F.R. §1.111 (b) and (c), how the claimed subject matter is patentable over the references.

The petitioner meets all the above-listed requirements. Accordingly, the petition is **GRANTED**.

The application will retain its special status throughout its entire prosecution, including any appeal to the Board of Patent Appeals and Interferences, subject only to diligent prosecution by the applicant. The application file is being forwarded to the examiner for appropriate action in due course.

Kenneth A. Wieder
Special Program Examiner
Technology Center 2600
Communications

UNITED STATES PATENT AND TRADEMARK OFFICE

Commissioner for Patents
United States Patent and Trademark Office
P.O. Box 1450
Alexandria, VA 22313-1450
www.uspto.gov

APPLIED MATERIALS, INC.
PATENT COUNSEL
Legal Affairs Department
P.O.BOX 450A
Santa Clara CA 95052

COPY MAILED

MAR 0 2 2005

OFFICE OF PETITIONS

In re Application of	:	
Steven Verhaverbeke	:	
Application No. 10/927,442	:	ON PETITION
Deposited: August 26, 2004	:	
Attorney Docket No.:008906	:	
US Title of Invention: SEMICONDUCTOR PROCESSING USING ENERGIZED HYDROGEN GAS AND IN COMBINATION WITH WET CLEANING	:	

This is a decision on the Petition for Filing Date filed January 14, 2005 (certificate of mailing January 10, 2005), requesting that the above-identified application be accorded the filing date of August 26, 2004.

Application papers in the above-identified application were deposited on August 26, 2004. However, on November 9, 2004, the Office of Initial Patent Examination mailed a "Notice of Incomplete Nonprovisional Application", notifying applicants that the application papers had not been accorded a filing date because the application was deposited without drawings.[1]

In response, 9 sheets of drawings, including figures 1-14 and the present petition were filed on January 14, 2005. The petition contends that the application as filed included 9 sheets of drawings and were described in the original filed specification. In support, the petition is accompanied by a declaration from Emma Koh and a copy of applicant's postcard receipt which acknowledges receipt in the office of " drawings 9 pages informal" on August 26, 2004.

---

[1] See 35 U.S.C. 111(a)(4)

Applicant's postcard receipt is prima facie[2] evidence that drawings were received on August 26, 2004, but no drawings are present in the file. Hence, it is clear that the papers for this application were mishandled by the Office. Therefore, it is concluded that 9 sheets of drawings, including figures 1-14, were received on August 26, 2004, as shown in counsel's file, and later misplaced in the Office.

The petition is Granted. The $130.00 submitted towards the current petition fee of $400.00 will be refunded to deposit account 50-1074.

Since the original drawings cannot be located in the Office, the copy of the drawings supplied on January 14, 2005, will be used for processing and examination purposes.

The application will be returned to the Office of Initial Patent Examination for further processing with a **filing date of August 26, 2004**, using the 9 sheets of drawings supplied on January 14, 2005.

Telephone inquiries related to this decision may be directed to the undersigned at (571) 272-3215.

Charlema R. Grant

Charlema R. Grant
Petitions Attorney
Office of Petitions

---

[2]A postcard receipt which itemizes and properly identifies the items which are being filed serves as prima facie evidence of receipt in the office of all items listed thereon. See MPEP 503.

UNITED STATES PATENT AND TRADEMARK OFFICE

Commissioner for Patents
United States Patent and Trademark Office
P.O. Box 1450
Alexandria, VA 22313-1450
www.uspto.gov

APPLIED MATERIALS, INC.
PATENT COUNSEL
LEGAL AFFAIRS DEPARTMENT
P.O. BOX 450A
SANTA CLARA CA 95052

COPY MAILED

JUN 23 2008

OFFICE OF PETITIONS

In re Application of	:	
Steven Verhaverbeke	:	
Application No. 10/927,442	:	DECISION GRANTING PETITION
Filed: August 26, 2004	:	UNDER 37 CFR 1.137(b)
Attorney Docket No. 008906	:	

This is a decision on the petition under 37 CFR 1.137(b), filed September 27, 2007, to revive the above-identified application.

The petition is **GRANTED**.

The petition satisfies the conditions for revival pursuant to the provisions of 37 CFR 1.137(b) in that (1) the reply in the form of an amendment; (2) the petition fee; and (3) the required statement of unintentional delay have been received. Accordingly, the reply to the Nonfinal Rejection mailed February 23, 2007, is accepted as having been unintentionally delayed.

Telephone inquiries concerning this decision should be directed to the undersigned at (571) 272-3208.

This matter is being referred to Technology Center AU 2812 to consider the reply received September 27, 2007.

Karen Creasy

Karen Creasy
Petitions Examiner
Office of Petitions

UNITED STATES PATENT AND TRADEMARK OFFICE

Commissioner for Patents
United States Patent and Trademark Office
P.O. Box 1450
Alexandria, VA 22313-1450
www.uspto.gov

TROJAN LAW OFFICES
9250 WILSHIRE BLVD
SUITE 325
BEVERLY HILLS CA 90212

COPY MAILED

JAN 0 4 2005

OFFICE OF PETITIONS

In re Application of :
Gary M. Zelman :
Application No. 10/927,455 :
Filed: August 26, 2004 :
Attorney Docket No. 04-08-2309 :

ON PETITION

This is a decision on the petition filed under 37 CFR 1.10, on November 18, 2004, requesting a filing date of August 26, 2004 for the above identified application. The petition is treated under 37 CFR 1.53.

Application papers in the above-identified application were filed on August 26, 2004. However, on November 2, 2004, the Office of Initial Patent Examination mailed a "Notice of Incomplete Nonprovisional Application," notifying applicant that the application had not been accorded a filing date because the application had been filed without drawings.

In response, the instant petition, under 37 CFR 1.10, with a date-stamped postcard receipt itemized was filed to show that twenty-four (24) sheets of drawings containing Figures 1-47, were filed on August 26, 2004.

Additionally, petitioner submits a copy of the Express Mail label as proof that the application as filed was complete, and argues under 37 CFR 1.10 that the application should be accorded a filing date of August 26, 2004. The Express Mail label however is not persuasive evidence of the receipt of the drawings on August 26, 2004. Where there is a dispute as to the *contents* of correspondence submitted to the Office an applicant may not rely upon the provisions of 37 CFR 1.10 to establish what documents and or fees were filed in the Office with such correspondence. Reliance on an express mail label is only appropriate where the correspondence was sent by Express Mail but nothing was received by the Office.

The postcard receipt however, corroborates petitioners assertion that the application as filed on August 26, 2004 was complete and the true copies of the application satisfies the requirements as set out in the Notice mailed November 2, 2004.

In view of the foregoing, the petition is **GRANTED**.

Given the basis for granting the petition, the petition fee filed with the petition on October 4, 2004 in the amount of $130.00 will be credited to deposit account no. 50-0703.

This application is being forwarded to the Office of Initial Patent Examination (OIPE) for further processing with a filing date of August 26, 2004, using the application papers received in the Office on that date and the papers submitted on petition November 18, 2004. Applicant will receive appropriate notifications regarding the fees owed, if any, and other information in due course from OIPE.

Telephone inquiries regarding this decision should be directed to the undersigned Petitions Attorney at (571) 272-3212.

Patricia Faison-Ball

Patricia Faison-Ball
Senior Petitions Attorney
Office of Petitions

UNITED STATES PATENT AND TRADEMARK OFFICE

UNITED STATES DEPARTMENT OF COMMERCE
United States Patent and Trademark Office
Address: COMMISSIONER FOR PATENTS
P.O. Box 1450
Alexandria, Virginia 22313-1450
www.uspto.gov

SAP / FINNEGAN, HENDERSON LLP
901 NEW YORK AVENUE, NW
WASHINGTON, DC 20001-4413

Mail Date: 04/28/2010

Applicant	: Horst Werner	: DECISION ON REQUEST FOR
Patent Number	: 7617185	: RECALCULATION of PATENT
Issue Date	: 11/10/2009	: TERM ADJUSTMENT IN VIEW
Application No	: 10/927,458	: OF WYETH AND NOTICE OF INTENT TO
Filed	: 08/27/2004	: ISSUE CERTIFICATE OF CORRECTION
		:

The Request for Recalculation is **GRANTED** to the extent indicated.

The patent term adjustment has been determined to be **345** days. The USPTO will *sua sponte* issue a certificate of correction reflecting the amount of PTA days determined by the recalculation.

Prior to the issuance of the certificate of correction, the USPTO will afford patentee an opportunity to be heard and request reconsideration. Accordingly, patentee has **one month or thirty (30) days**, whichever is longer, to file a request for reconsideration of this patent term adjustment calculation. See 35 U.S.C. 154(b)(3)(B)(ii) and 37 CFR 1.322(a)(4). No extensions of time will be granted under 37 CFR 1.136.

Patentee should use document code PET.OP if electronically filing a request for reconsideration of this patent term adjustment calculation. The patentee must also include the information required by 37 CFR 1.705(b)(2) and the fee required by 37 CFR 1.18(e). If patentee does not file a timely request for reconsideration of this patent term adjustment calculation including the information required by 37 CFR 1.705(b)(2) and the fee required by 37 CFR 1.18(e), the USPTO will issue a certificate of correction reflecting the PTA determination noted above.

Patentee should be aware that in order to preserve the right to review in the United States District Court for the District of Columbia of the USPTO patent term adjustment determination, patentee must ensure that he or she also take the steps required under 35 U.S.C. 154(b)(4)(A) in a timely manner. Nothing in the request for recalculation should be construed as providing an alternative time frame for commencing a civil action under 35 U.S.C. 154(b)(4)(A).

Any questions concerning this decision should be directed to the Office of Patent Legal Administration at 571-272-7702.

UNITED STATES PATENT AND TRADEMARK OFFICE

Commissioner for Patents
United States Patent and Trademark Office
P.O. Box 1450
Alexandria, VA 22313-1450
www.uspto.gov

BLACK LOWE & GRAHAM, PLLC
701 FIFTH AVENUE
SUITE 4800
SEATTLE WA 98104

COPY MAILED

APR 0 7 2008

OFFICE OF PETITIONS

In re Application of	:	
Daniel **Alberts** et al.	:	
Application No. 10/927,464	:	DECISION ON PETITION
Filed: August 26, 2004	:	
Attorney Docket No. ORMO-1-1004	:	

This is a decision on the petition under the unintentional provisions of 37 CFR 1.137(b), filed December 17, 2007, to revive the above-identified application.

The petition is **GRANTED**.

This application became abandoned for failure to reply in a timely manner to the Non-final Office action mailed May 02, 2007, which set a shortened statutory period for reply of three (3) months. No extension of time under the provisions of 37 CFR 1.136(a) was obtained. Accordingly, the above-identified application became abandoned on August 03, 2007.

The petition satisfies the requirements of 37 CFR 1.137(b) in that petitioner has supplied (1) the reply in the form of an amendment; (2) the petition fee of $770.00 and (3) a proper statement of unintentional delay. Accordingly, the reply to the Non-final Office action of December 17, 2007 is accepted as having been unintentionally delayed.

Telephone inquiries concerning this decision should be directed to Thuy Pardo at (571) 272-6052 or in her absence, the undersigned at (571)272-7099.

This application is being referred to Technology Center AU 3724 for appropriate action by the Examiner in the normal course of business on the reply received

for David A. Bucci
Petitions Examiner
Office of Petitions

SPE RESPONSE FOR CERTIFICATE OF CORRECTION

BEST AVAILABLE COPY

Paper No.: _____

DATE : 1/23/2007

TO SPE OF : ART UNIT 2800 (2819)

SUBJECT : Request for Certificate of Correction on Patent No.: 6,985,012

A response is requested with respect to the accompanying request for a certificate of correction.

Please complete this form and return with file *(PFW), within 7 days to:
Certificates of Correction Branch – 2900 South Tower ste.9A43A
Palm location **7580** or forward *(IFW) to scanning using document code **COCX**.

*ok to make changes to claim 3 as req. in Cof C ?

Ernest C. White, LIE (703) 308-9390x122
Certificates of Correction Branch

Thank You For Your Assistance

The request for issuing the above-identified correction(s) is hereby:
Note your decision on the appropriate box.

- ☑ **Approved** — All changes apply.
- ☐ **Approved in Part** — Specify below which changes do not apply.
- ☐ **Denied** — State the reasons for denial below.

Comments:

Richard Parrie
SPE

2819
Art Unit

PTOL-306 (REV. 7/03)

U.S. DEPARTMENT OF COMMERCE Patent and Trademark Office

UNITED STATES PATENT AND TRADEMARK OFFICE

Commissioner for Patents
United States Patent and Trademark Office
P.O. Box 1450
Alexandria, VA 22313-1450
www.uspto.gov

Stephen A. Soffen
Dickstein Shapiro LLP
1825 Eye Street, NW
Washington, DC 20006-5403

MAILED

JAN 29 2007

Technology Center 2100

In re Application of: Virgil V. Wilkins et al.
Application No. 10/927479
Filed: 27 August 2004
For: HIGH SPEED I/O CONTROLLER HAVING SEPARATE CONTROL AND DATA PATHS

DECISION ON PETITION TO MAKE SPECIAL (ACCELERATED EXAMINATION) UNDER M.P.E.P. §708.02 (VIII)

This is a decision on the petition filed 24 August 2006, under 37 C.F.R. 102(d) and M.P.E.P. § 708.02(VIII): Accelerated Examination, to make the above-identified application special.

The Petition is **DISMISSED**.

M.P.E.P. § 708.02, Section VIII which sets out the prerequisites for a grantable petition for Accelerated Examination under 37 C.F.R. § 102(d) states in relevant part:

A new application (one which has not received any examination by the examiner) may be granted special status provided that applicant (and this term includes applicant's attorney or agent) complies with each of the following items:

(a) Submits a petition to make special accompanied by the fee set forth in 37 CFR 1.17(h);

(b) Presents all claims directed to a single invention, or if the Office determines that all the claims presented are not obviously directed to a single invention, will make an election without traverse as a prerequisite to the grant of special status;

(c) Submits a statement(s) that a pre-examination search was made, listing the field of search by class and subclass, publication, Chemical Abstracts, foreign patents, etc. The pre-examination search must be directed to the invention as claimed in the application for which special status is requested. A search made by a foreign patent office satisfies this requirement;

(d) Submits one copy each of the references deemed most closely related to the subject matter encompassed by the claims if said references are not already of record; and

(e) Submits a detailed discussion of the references, which discussion points out, with the particularity required by 37 CFR 1.111 (b) and (c), how the claimed subject matter is patentable over the references.

In this case, the petition filed 24 August 2006 fails to adequately meet the requirements (b), (c), & (e) as set forth supra.

With respect to requirement (b), the petition fails to state unequivocally "all claims are directed to a single invention or if the Office determines that all the claims presented are not obviously directed to a single invention, will make an election without traverse as a prerequisite to the grant of special status".

With respect to requirement (c), the listing of the field of search by **class and subclass must be** directed to **the invention as claimed** in the application for which special status is requested. The instant claims are drawn to an I/O Controller and a method of operating an I/O Controller. A required search for the claimed subject matter in class 710 (ELECTRICAL COMPUTERS AND DIGITAL DATA PROCESSING SYSTEMS: INPUT/OUTPUT) subclasses 036 (Input/Output access regulation) should have been included.

With respect to requirement (e), a complete detailed discussion of the references has not been provided with the necessary specificity required under 37 CFR 1.111 (b) and (c). Applicant must provide a "detailed discussion of the references, which discussion points out, with the particularity required by 37 CFR 1.111 (b) and (c), how the claimed subject matter is patentable over the references". The petition filed 24 August 2006, however, provides only a terse summary of the claimed invention and then asserts that none of the references teach Applicant's claimed features. Petitioner merely alludes to the references in broad terms, and fails to furnish the "detailed discussion of the references, which discussion points out how the claimed subject matter is patentable over the references." Reference is made to Petitioner's cursory treatment of the references, with a statement for each of the cited references, with respect to independent claim 9, that the cited prior art "...does not disclose a dedicated control information link and a dedicated data link. Additionally, with respect to claim 1 (the other independent claim in the application), it is noted that a mere allegation that "claim 1 includes limitations comparable to the above cited limitations of claim 9" does not satisfy the requirements of 37 CFR 1.111 (b) and (c). Claim 1 does not contain the claim language discussed above with respect to claim 9. Specifically, Petitioner should ensure that the above discussion is directed to how the language of ***each of*** the independent claims is specifically distinguishable and patentable from the references provided in requirement (d) above. In the discussion of the references, Petitioner is required to point out (substantively detail) the prior art elements and associations germane to the claims to fully flesh-out the comparison between the referenced prior art and Applicant's claimed features.

Petition to Make Special **DISMISSED**.

Petitioner is given one opportunity to perfect the petition. Any request for reconsideration must be filed within TWO MONTHS of the mail date of this decision.

Until the renewed petition is submitted, the application will be returned to the examiner's docket to await treatment on the merits in the normal order of examination.

Mano Padmanabhan
Quality Assurance Specialists, Technology Center 2100, Work Group 2180
Computer Architecture, Software and Information Security
571-272-4210

MAILED

JUN 15 2007

TECHNOLOGY CENTER 2100

UNITED STATES PATENT AND TRADEMARK OFFICE

Commissioner for Patents
United States Patent and Trademark Office
P.O. Box 1450
Alexandria, VA 22313-1450
www.uspto.gov

Stephen A. Soffen
Dickstein Shapiro LLP
1825 Eye Street, NW
Washington, DC 20006-5403

In re Application of: Virgil V. Wilkins et al.
Application No. 10/927479
Filed: 27 August 2004
For: HIGH SPEED I/O CONTROLLER HAVING SEPARATE CONTROL AND DATA PATHS

DECISION ON PETITION TO MAKE SPECIAL (ACCELERATED EXAMINATION) UNDER M.P.E.P. §708.02 (VIII)

This is a decision on the petition filed 24 August 2006, and the request for reconsideration of adverse decision filed March 29, 2007, under 37 C.F.R. 102(d) and M.P.E.P. § 708.02(VIII): Accelerated Examination, to make the above-identified application special.

The Petition is **GRANTED**.

M.P.E.P. § 708.02, Section VIII which sets out the prerequisites for a grantable petition for Accelerated Examination under 37 C.F.R. § 102(d) states in relevant part:

A new application (one which has not received any examination by the examiner) may be granted special status provided that applicant (and this term includes applicant's attorney or agent) complies with each of the following items:

(a) Submits a petition to make special accompanied by the fee set forth in 37 CFR 1.17(h);

(b) Presents all claims directed to a single invention, or if the Office determines that all the claims presented are not obviously directed to a single invention, will make an election without traverse as a prerequisite to the grant of special status;

(c) Submits a statement(s) that a pre-examination search was made, listing the field of search by class and subclass, publication, Chemical Abstracts, foreign patents, etc. The pre-examination search must be directed to the invention as claimed in the application for which special status is requested. A search made by a foreign patent office satisfies this requirement;

(d) Submits one copy each of the references deemed most closely related to the subject matter encompassed by the claims if said references are not already of record; and

(e) Submits a detailed discussion of the references, which discussion points out, with the particularity required by 37 CFR 1.111 (b) and (c), how the claimed subject matter is patentable over the references.

Applicant's submission meets all the criteria set out above, accordingly, the Petition is **GRANTED**.

The application file is being forwarded to the Examiner of Record for accelerated examination according to the procedures set forth in M.P.E.P. §708.02, Section VIII.

Any inquiry concerning this decision should be directed to Mano Padmanabhan whose telephone number is (571) 272-4210.

Mano Padmanabhan
Quality Assurance Specialists, Technology Center 2100, Work Group 2180
Computer Architecture, Software and Information Security
571-272-4210

UNITED STATES PATENT AND TRADEMARK OFFICE

Commissioner for Patents
United States Patent and Trademark Office
P.O. Box 1450
Alexandria, VA 22313-1450
www.uspto.gov

COPY MAILED

AUG 27 2009

OFFICE OF PETITIONS

FOLEY & LARDNER LLP
150 EAST GILMAN STREET
P.O. BOX 1497
MADISON WI 53701-1497

In re Patent No. 7,525,938	:	
Hurtta	:	DECISION ON
Issue Date: April 28, 2009	:	REQUEST FOR RECONSIDERATION
Application No. 10/927,482	:	OF
Filed: August 27, 2004	:	PATENT TERM ADJUSTMENT
Attorney Docket No. 088245-1068	:	

This is in response to the "REQUEST FOR RECONSIDERATION OF PATENT TERM ADJUSTMENT UNDER 37 C.F.R.§1.705," filed June 19, 2009, requesting that the patent term adjustment determination for the above-identified patent be changed from eight hundred thirty-one (831) days to one thousand two hundred seventy-nine(1,279) days.

Patentee requests that the decision on this request for reconsideration of patent term adjustment be deferred or delayed until a final decision has been rendered in *Wyeth v. Dudas*. There is no specific regulatory provision for requesting that a petition under 37 CFR 1.705(d) be held in abeyance.

The request for reconsideration is granted to the extent that the determination has been reconsidered; however, the request for reconsideration of patent term adjustment is **DISMISSED** with respect to making any change in the patent adjustment determination under 35 U.S.C. § 154(b) of 831 days.

On April 28, 2009, the above-identified application matured into U.S. Patent No. 7,525,938 with a patent term adjustment of 831 days. This request for reconsideration of patent term adjustment (including the required fee) was timely filed within two months of the issue date of the patent. See 1.705(d).

Patentee requests recalculation of the patent term adjustment based on the decision in *Wyeth v. Dudas*, 580 F. Supp. 2d 138, 88 U.S.P.Q. 2d 1538 (D.D.C. 2008). Patentee asserts that pursuant to *Wyeth*, a PTO delay under §154(b)(1)(A) overlaps with a delay under §154(b)(1)(B) only if the delays "occur on the same day." Patentee maintains that a portion of the period of adjustment due to the Three Year Delay by the Office, pursuant to 37 CFR § 1.703(b), 448 of the 610 days, and the period of adjustment due to examination delay, pursuant to 37 CFR §1.702(a), of 831 days do not overlap as these periods do not occur on the same day.

Patentee argues that the period of adjustment due to the Three Year Delay by the Office, pursuant to 37 CFR § 1.703(b), is 610 days. This 610 day period is calculated based on the application having been filed under 35 U.S.C. §111 on August 27, 2004, and the patent having not issued until April 28, 2009, three years and 610 days later. Patentee asserts that in addition to this 610 day period, he is entitled to a period of adjustment due to examination delay, pursuant to 37 CFR §1.702(a) of 831 days for the failure by the Office to mail at least one of a notification under 35 U.S.C. 132 not later than fourteen months after the date on which the application was filed under 35 U.S.C. 111(a), pursuant to § 1.702(a)(1).

Under 37 CFR § 1.703(f), patentee is entitled to a period of patent term adjustment equal to the period of delays based on the grounds set forth in 37 CFR §1.702 reduced by the period of time equal to the period of time during which applicant failed to engage in reasonable efforts to conclude prosecution pursuant to 37 CFR §1.704. In other words, the period of Office delay reduced by the period of applicant delay. The period of reduction of 0 days for applicant delay is not in dispute. Patentee asserts that the total period of Office delay is the sum of the period of Three Years Delay (610 days) and the period of Examination Delay (831 days) to the extent that these periods of delay are not overlapping.

Patentee contends that only 162 days of the period of delay of 831 days for the Office's failure to mail at least one of a notification under 35 U.S.C. 132 not later than fourteen months after the date on which the application was filed (October 28, 2005 to February 5, 2008) overlap with the Three Year Delay period (August 28, 2007 to April 28, 2009). Patentee asserts that this overlapping period is the 162 days running from August 28, 2007 to February 5, 2008.

Accordingly, patentee submits that the total period of Office Delay is 1,279 days, which is the sum of the period of Three Year Delay (610 days) and the period of Examination Delay (831 days), reduced by the period of overlap (162 days).

As such, patentee asserts entitlement to a patent term adjustment of 1,279 days (610 +831 reduced by 162 overlap -0 for applicant delay).

The Office agrees that the patent issued 3 years and 610 days after its filing date. The Office agrees that the action detailed above was not taken within the specified time frame, and thus, the entry of period of adjustment of 831 days is correct. At issue is whether patentee should accrue 448 (adjusted for overlap, per patentee's calculations) days of patent term adjustment for the Office taking in excess of three years to issue the patent, as well as, 831 days for Office failure to take a certain action within a specified time frame (or examination delay).

The Office contends that the full 610 period of Three Year Delay overlaps with the 831 days accorded during the pendency of the application. Patentee's interpretation of the period of overlap has been considered and found to be incorrect. Patentee's calculation of the period of overlap is inconsistent with the Office's interpretation of this provision. 35 U.S.C. 154(b)(2)(A) limits the adjustment of patent term, as follows:

> to the extent that the periods of delay attributable to grounds specified in paragraph (1) overlap, the period of any adjustment granted under this subsection shall not exceed the actual number of days the issuance of the patent was delayed.

Likewise, 37 CFR 1.703(f) provides that:

> To the extent that periods of delay attributable to the grounds specified in §1.702 overlap, the period of adjustment granted under this section shall not exceed the actual number of days the issuance of the patent was delayed.

As explained in *Explanation of 37 CFR 1.703(f) and of the United States Patent and Trademark Office Interpretation of 35 U.S.C.*

154(b)(2)(A), 69 Fed. Reg. 34283 (June 21, 2004), the Office interprets 35 U.S.C. 154(b)(2)(A) as permitting either patent term adjustment under 35 U.S.C. 154(b)(1)(A)(i)-(iv), or patent term adjustment under 35 U.S.C. 154(b)(1)(B), but not as permitting patent term adjustment under both 35 U.S.C. 154(b)(1)(A)(i)-(iv) and 154(b)(1)(B). Accordingly, the Office implements the overlap provision as follows:

> If an application is entitled to an adjustment under 35 U.S.C. 154(b)(1)(B), the entire period during which the application was pending (except for periods excluded under 35 U.S.C. 154(b)(1)(B)(i)-(iii)), and not just the period beginning three years after the actual filing date of the application, is the period of delay under 35 U.S.C. 154(b)(1)(B) in determining whether periods of delay overlap under 35 U.S.C. 154(b)(2)(A). Thus, any days of delay for Office issuance of the patent more than 3 years after the filing date of the application, which overlap with the days of patent term adjustment accorded prior to the issuance of the patent will not result in any additional patent term adjustment. See 35 U.S.C. 154(b)(1)(B), 35 U.S.C. 154(b)(2)(A), and 37 CFR § 1.703(f). See *Changes to Implement Patent Term Adjustment Under Twenty Year Term; Final Rule*, 65 Fed. Reg. 54366 (Sept. 18, 2000). See also *Revision of Patent Term Extension and Patent Term Adjustment Provisions; Final Rule*, 69 Fed. Reg. 21704 (April 22, 2004), 1282 Off. Gaz. Pat. Office 100 (May 18, 2004). See also *Explanation of 37 CFR 1.703(f) and of the United States Patent and Trademark Office Interpretation of 35 U.S.C. 154(b)(2)(A)*, 69 Fed. Reg. 34283 (June 21, 2004).

The current wording of § 1.703(f) was revised in response to the misinterpretation of this provision by a number of applicants. The rule was slightly revised to more closely track the corresponding language of 35 U.S.C. 154(b)(2)(A). The relevant portion differs only to the extent that the statute refers back to provisions of the statute whereas the rule refers back to sections of the rule. This was not a substantive change to the rule nor did it reflect a change of the Office's interpretation of 35 U.S.C. 154(b)(2)(A). As stated in the *Explanation of 37 CFR 1.703(f) and of the United States Patent and Trademark Office Interpretation of 35 U.S.C. 154(b)(2)(A)*, the Office has consistently taken the position that if an application is entitled to an adjustment under the three-year pendency

provision of 35 U.S.C. 154(b)(1)(B), the entire period during which the application was pending before the Office (except for periods excluded under 35 U.S.C. 154(b)(1)(B)(i)-(iii)), and not just the period beginning three years after the actual filing date of the application, is the relevant period under 35 U.S.C. 154(b)(1)(B) in determining whether periods of delay "overlap" under 35 U.S.C. 154(b)(2)(A).

This interpretation is consistent with the statute. Taken together the statute and rule provide that to the extent that periods of delay attributable to grounds specified in 35 U.S.C. 154(b)(1) and in corresponding §1.702 overlap, the period of adjustment granted shall not exceed the actual number of days the issuance of the patent was delayed. The grounds specified in these sections cover the A) guarantee of prompt Patent and Trademark Office responses, B) guarantee of no more than 3 year application pendency, and C) guarantee or adjustments for delays due to interference, secrecy orders and appeals. A section by section analysis of 35 U.S.C. 154(b)(2)(A) specifically provides that:

> Section 4402 imposes limitations on restoration of term. In general, pursuant to [35 U.S.C.] 154(b)(2)(A)-(C), total adjustments granted for restorations under [35 U.S.C. 154](b)(1) are reduced as follows: (1) To the extent that there are multiple grounds for extending the term of a patent that may exist simultaneously (e.g., delay due to a secrecy order under [35 U.S.C.] 181 and administrative delay under [35 U.S.C.] 154(b)(1)(A)), the term should not be extended for each ground of delay but only for the actual number of days that the issuance of a patent was delayed; See 145 Cong. Rec. S14,718[1]

As such, the period for over 3 year pendency does not overlap only to the extent that the actual dates in the period beginning three years after the date on which the application was filed overlap with the actual dates in the periods for failure of the Office to take action within specified time frames. In other words, consideration of the overlap does not begin three years after the filing date of the application. Treating the relevant

---

[1] The AIPA is title IV of the Intellectual Property and Communications Omnibus Reform Act of 1999 (S. 1948), which was incorporated and enacted as law as part of Pub. L. 106-113. The Conference Report for H.R. 3194, 106th Cong. 1st Sess. (1999), which resulted in Pub. L. 106-113, does not contain any discussion (other than the incorporated language) of S. 1948. A section-by-section analysis of S. 1948, however, was printed in the Congressional Record at the request of Senator Lott, See 145 Cong. Rec. S14,708-26 (1999)(daily ed. Nov. 17, 1999).

period as starting on August 28, 2007, the date that is 3 years after the actual filing date of the application, is incorrect.

In this instance, the relevant period under 35 U.S.C. 154(b)(1)(B) in determining whether periods of delay "overlap" under 35 U.S.C. 154(b)(2)(A) is the entire period during which the application was pending before the Office, August 27, 2004 to April 28, 2009. (There were no periods excluded under 35 U.S.C. 154(b)(1)(B)(i)-(iii)). 831 days of patent term adjustment were accorded prior to the issuance of the patent for the Office failing to respond within a specified time frame during the pendency of the application. The 610 days for Office delay in issuing the patent overlaps with the 831 accorded during the pendency of the application. During that time, the issuance of the patent was delayed by 831 days, not 831 + 448 days. The Office took 14 months and 831 days to issue a first Office action. Otherwise, the Office took all actions set forth in 37 C.F.R. § 1.702(a) within the prescribed timeframes. Nonetheless, given the initial 831 days of Office delay and the time allowed within the timeframes for processing and examination, and applicant delays, the patent issued, three years and 610 days after its filing date. Accordingly, 0 days of patent term adjustment was properly entered for the Three Year Delay period, since the period of delay of 610 days attributable to the delay in the issuance of the patent completely overlaps with the adjustment of 831 days attributable to ground specified in § 1.702(a)(1).

Accordingly, at issuance, the Office properly entered 0 additional days of patent term adjustment for the Office taking in excess of 3 years to issue the patent for a total Office delay of 831 days.

In view thereof, the revised determination of patent term adjustment at the time of the issuance of the patent remains 831 days.

The Office acknowledges submission of the $200.00 fee set forth in 37 CFR 1.18(e). No additional fees are required.

Telephone inquiries specific to this matter should be directed to Shirene Willis Brantley, Senior Petitions Attorney, at (571) 272-3230.

Nancy Johnson
Senior Petitions Attorney
Office of the Deputy Commissioner
for Patent Examination Policy

UNITED STATES PATENT AND TRADEMARK OFFICE

Commissioner for Patents
United States Patent and Trademark Office
P.O. Box 1450
Alexandria, VA 22313-1450
www.uspto.gov

MAILED

APR 23 2010

OFFICE OF PETITIONS

FOLEY & LARDNER LLP
150 EAST GILMAN STREET
P.O. BOX 1497
MADISON WI 53701-1497

In re Patent of Hurtta	:	DECISION ON REQUEST
Patent No. 7,525,938	:	FOR
Issue Date: April 28, 2009	:	RECONSIDERATION OF
Application No. 10/927,482	:	PATENT TERM ADJUSTMENT
Filed: August 27, 2004	:	and
Attorney Docket No. 088245-1068	:	NOTICE OF INTENT TO ISSUE
	:	CERTIFICATE OF CORRECTION

This is a decision on the renewed petition filed on October 21, 2009, which is being treated as a petition under 37 CFR 1.705(d) requesting that the patent term adjustment indicated on the above-identified patent be corrected to indicate that the term of the above-identified patent is extended or adjusted by one thousand two hundred seventy-nine (1,279) days.

The petition to correct the patent term adjustment indicated on the above-identified patent to indicate that the term of the above-identified patent is extended or adjusted by one thousand two hundred seventy-nine (1,279) days is **GRANTED**.

The Office acknowledges the previous submission of the $200.00 fee set forth in 37 CFR 1.18(e) on June 19, 2009. No additional fees are required.

The application is being forwarded to the Certificates of Correction Branch for issuance of a certificate of correction. The Office will issue a certificate of correction indicating that the term of the above-identified patent is extended or adjusted by **one thousand two hundred seventy-nine (1,279)** days.

Telephone inquiries specific to this decision should be directed to the undersigned at (571) 272-3230.

Shirene Willis Brantley

Shirene Willis Brantley
Senior Petitions Attorney
Office of Petitions

Enclosure: Copy of DRAFT Certificate of Correction

UNITED STATES PATENT AND TRADEMARK OFFICE

CERTIFICATE OF CORRECTION

PATENT : 7,525,938 B2

DATED : April 28, 2009

INVENTOR(S) : Hurtta

It is certified that error appears in the above-identified patent and that said Letters Patent is hereby corrected as shown below:

On the cover page,

[*] Notice: Subject to any disclaimer, the term of this patent is extended or adjusted under 35 U.S.C. 154(b) by (831) days

Delete the phrase "by 831 days" and insert – by 1,279 days--

UNITED STATES PATENT AND TRADEMARK OFFICE

Commissioner for Patents
United States Patent and Trademark Office
P.O. Box 1450
Alexandria, VA 22313-1450
www.uspto.gov

MORRISON & FOERSTER LLP
1650 TYSONS BOULEVARD
SUITE 400
MCLEAN, VA 22102

COPY MAILED

JUL 09 2007

OFFICE OF PETITIONS

In re Application of
Martin BROX, et al
Application No. 10/927,497
Filed: August 27, 2004
Attorney Docket No. 543822008800

DECISION ON PETITION
TO WITHDRAW
FROM RECORD

This is a decision on the Request to Withdraw as attorney or agent of record under 37 C.F.R. § 1.36(b), filed May 2, 2007.

The request is **APPROVED**.

A grantable request to withdraw as attorney/agent of record must be signed by every attorney/agent seeking to withdraw or contain a clear indication that one attorney is signing on behalf of another/others. A request to withdraw will not be approved unless at least 30 (thirty) days would remain between the date of approval and the later of the expiration date of a time to file a response or the expiration date of the maximum time period which can be extended under 37 C.F.R. § 1.136(a).

The request was signed by Deborah S. Gladstein on behalf of all attorneys of record who are associated with customer No. 25227.

All attorneys/agents associated with Customer Number 25227 have been withdrawn.

Applicant is reminded that there is no attorney of record at this time.

The request to change the correspondence of record is not acceptable as the requested correspondence address is not that of: (1) the first named signing inventor; or (2) an intervening assignee of the entire interest under 37 C.F.R 3.71. All future communications from the Office will be directed to the first named signing inventor at the first copied address below until otherwise properly notified by the applicant.

In order to request or take action in a patent matter, the assignee must establish its ownership of the patent to the satisfaction of the Director. In this regard, a Statement under 37 CFR 3.73(b) must have either: (i) documentary evidence of a chain of title from the original owner to the assignee (*e.g.*, copy of an executed assignment), and a statement affirming that the documentary evidence of the chain of title from the original owner to the assignee was or concurrently is being submitted for recordation pursuant to § 3.11; or (ii) a statement specifying where documentary evidence of a chain of title from the original owner to the assignee is recorded in the assignment records of the Office (*e.g.*, reel and frame number).

There are no Office actions pending at the present time.

Telephone inquiries concerning this decision should be directed to Diane Goodwyn at 571-272-6735.

April Wise
Petitions Examiner
Office of Petitions

cc: MARTIN BROX
KLARASTR. 15
MUNICH, 80636
GERMANY

cc: SLATER & MATSIL L.L.P.
17950 PRESTON ROAD,
SUITE 1000
DALLAS, TX 75252

UNITED STATES PATENT AND TRADEMARK OFFICE

UNITED STATES DEPARTMENT OF COMMERCE
United States Patent and Trademark Office
Address: COMMISSIONER FOR PATENTS
P.O. Box 1450
Alexandria, Virginia 22313-1450
www.uspto.gov

APPLICATION NUMBER	FILING OR 371 (c) DATE	FIRST NAMED APPLICANT	ATTY. DOCKET NO./TITLE
10/927,497	08/27/2004	Martin Brox	543822008800

CONFIRMATION NO. 1045

OC000000024352435

25227
MORRISON & FOERSTER LLP
1650 TYSONS BOULEVARD
SUITE 400
MCLEAN, VA 22102

Date Mailed: 06/14/2007

NOTICE REGARDING CHANGE OF POWER OF ATTORNEY

This is in response to the Power of Attorney filed 05/02/2007.

- The withdrawal as attorney in this application has been accepted. Future correspondence will be mailed to the new address of record. 37 CFR 1.33.

Diane Goodwyn
Office of Initial Patent Examination (571) 272-4000, or 1-800-PTO-9199
FORMER ATTORNEY/AGENT COPY

UNITED STATES PATENT AND TRADEMARK OFFICE

Commissioner for Patents
United States Patent and Trademark Office
P.O. Box 1450
Alexandria, VA 22313-1450
www.uspto.gov

COPY MAILED

OCT 10 2008

OFFICE OF PETITIONS

JUNEAU PARTNERS
PO BOX 2516
ALEXANDRIA VA 22301

In re Application of	:	
Jose L. Hernandez-Rebollar	:	
Application No. 10/927,508	:	ON PETITION
Filed: August 27, 2004	:	
Attorney Docket No. GWU-JHR-001	:	

This is a decision on the petition under 37 CFR 1.137(b), filed September 19, 2008, to revive the above-identified application.

The petition under 37 CFR 1.137(b) is **GRANTED**.

The above-identified application became abandoned for failure to timely file a response to the non-final Office action mailed December 10, 2007. This Office action set a shortened statutory period for reply of three (3) months. No reply having been received, the application became abandoned on March 11, 2008. A Notice of Abandonment was mailed on July 28, 2008.

With the instant petition, applicant paid the petition fee, made the proper statement of unintentional delay, and submitted the required reply in the form of an Amendment.

The matter is being forwarded to Group Art Unit 2626 for consideration of the Amendment filed September 19, 2008.

Telephone inquiries concerning this decision should be directed to the undersigned at (571)272-3207.

Cliff Congo
Petitions Attorney
Office of Petitions

UNITED STATES PATENT AND TRADEMARK OFFICE

COMMISSIONER FOR PATENTS
UNITED STATES PATENT AND TRADEMARK OFFICE
P.O. BOX 1450
ALEXANDRIA, VA 22313-1450
www.uspto.gov

BOZICEVIC, FIELD & FRANCIS LLP
1900 UNIVERSITY AVENUE
SUITE 200
EAST PALO ALTO, CA 94303

COPY MAILED

AUG 09 2005

OFFICE OF PETITIONS

In re Application of	:
Balwani, et al.	: DECISION REFUSING STATUS
Application No. 10/927,518	: UNDER 37 CFR 1.47(a)
Filed: August 26, 2004	:
Atty. Dkt. No.: AERX-092CIP	:
For: COMPOSITIONS METHODS AND	:
SYSTEMS FOR PULMONARY DELIVERY	:
OF RECOMBINANT HUMAN INTERFERON	:
ALPHA-2B	:

This decision is in response to the petition under 37 CFR 1.47(a), filed May 20, 2005.

The petition is **GRANTED**.

Petitioners have shown that inventor Gul P. Balwani has refused to sign the declaration after having been presented with the application papers.

Thus, the above-identified application and papers have been reviewed and found in compliance with 37 CFR 1.47(a). This application is hereby accorded Rule 1.47(a) status.

As provided in Rule 1.47(c), this Office will forward notice of this application's filing to the non-signing inventor at the address given in the petition. Notice of the filing of this application will also be published in the Official Gazette.

After this decision is mailed, the above-identified application will be returned to the Office of Initial Patent Examination for further processing.

Telephone inquiries concerning this matter may be directed to the undersigned at (571) 272-3205.

Alesia M. Brown
Petitions Attorney
Office of Petitions

UNITED STATES PATENT AND TRADEMARK OFFICE

JUL 19 2007

Commissioner for Patents
United States Patent and Trademark Office
P.O. Box 1450
Alexandria, VA 22313-1450
www.uspto.gov

B.J. Sadoff
NIXON & VANDERHYE P.C.
901 NORHT GLEBE RD, 11TH FLOOR
ARLINGTON, VA 22203-1808

In re Application of	:
SABLON, E. et al.	:
Serial No.: 10/927,520	:Decision on Petition
Filed : August 27, 2004	:
Attorney Docket No.: 2551-157	:

This letter is in response to the Petition under 37 C.F.R. 1.181 filed on February 26, 2007 requesting withdrawal of the restriction requirement. The delay in acting upon this petition is regretted.

BACKGROUND

On July 26, 2006, the examiner mailed a restriction requirement in which the original claims 43-93 were divided into 21 groups and required selection of a clade; one sequence from SEQ ID NO: 1, 2, 8, 10, 16. Claims 55-57, 66-67, 83, 91 were identified as linking claims.

On August 28, 2006, Applicants elected Group 1, Claims 43, 44, 81, 85, 89, 55-57, 66-67, 83 and 91 and SEQ ID NO: 9. The response traversed the restriction requirement.

On November 24, 2006 the examiner considered the traversal, made the restriction requirement FINAL and mailed to applicants a non-final Office action, in which Group 1 (Claims 43, 44, 81, 85, 89, 55-57, 66, 67, 83, 91) and SEQ ID NO: 9 were searched and examined on the merits.

On February 26, 2007, applicants filed this petition to request that the Office withdraw the restriction requirement and a response to the action mailed November 24, 2006.

DISCUSSION

The petition and file history have been carefully considered.

Consideration of Independent and Distinct Inventions

35 U.S.C. 121.sets forth the appropriate means for restriction which permits,

> "If two or more independent and distinct inventions are claimed in one application, the Director may require the application to be restricted to one of the inventions."

MPEP 802.01 helps define the terms independent and distinct.

> The term "independent" (i.e., unrelated) means that there is no disclosed relationship between the two or more inventions claimed, that is, they are unconnected in design, operation, and effect. Related inventions are distinct if the inventions as claimed are not connected in at least one of design, operation, or effect (e.g., can be made by, or used in, a materially different process) and wherein at least one invention is PATENTABLE (novel and nonobvious) OVER THE OTHER (though they may each be unpatentable over the prior art).

The MPEP also provides guidance in 806.01, stating

> "In passing upon questions of double patenting and restriction, it is the claimed subject matter that is considered and such claimed subject matter must be compared in order to determine the question of distinctness or independence."

Finally, "Where the claims of an application define the same essential characteristics of a single disclosed embodiment of an invention, restriction there between should never be required. This is because the claims are not directed to distinct inventions; rather they are different definitions of the same disclosed subject matter, varying in breadth or scope of definition" (see MPEP 806.06).

An alignment of SEQ ID NO: 9 and 10 is provided below. There is a single mismatch between the two sequences.

```
Score =  427 bits (222),  Expect = 9e-117
 Identities = 238/239 (99%), Gaps = 0/239 (0%)
 Strand=Plus/Plus

Query  1    TTTCTAGCCATGGCGTTAGTATGAGTGTCGTACAGCCTCCAGGACCCCCCCTCCCGGGAG  60
            ||||||||||||||||||||||||||||||||||||||||||||||||||||||||||||
Sbjct  1    TTTCTAGCCATGGCGTTAGTATGAGTGTCGTACAGCCTCCAGGACCCCCCCTCCCGGGAG  60

Query  61   AGCCATAGTGGTCTGCGGAACCGGTGAGTACACCGGAATTGCCGGGAAGACTGGGTCCTT  120
            ||||||||||||||||||||||||||||||||||||||||||||||||||||||||||||
Sbjct  61   AGCCATAGTGGTCTGCGGAACCGGTGAGTACACCGGAATTGCCGGGAAGACTGGGTCCTT  120

Query  121  TCTTGGATAAACCCACTCTATGCCCGGAGATTTGGGCGTGCCCCCGCGAGACTGCTAGCC  180
            |||||||| |||||||||||||||||||||||||||||||||||||||||||||||||||
Sbjct  121  TCTTGGATTAACCCACTCTATGCCCGGAGATTTGGGCGTGCCCCCGCGAGACTGCTAGCC  180

Query  181  GAGTAGTGTTGGGTCGCGAAAGGCCTTGTGGTACTGCCTGATAGGGTGCTTGCGAGTGA  239
            |||||||||||||||||||||||||||||||||||||||||||||||||||||||||||
Sbjct  181  GAGTAGTGTTGGGTCGCGAAAGGCCTTGTGGTACTGCCTGATAGGGTGCTTGCGAGTGA  239
```

The petition asserts that Groups I, II, III, IV, V, VI, VII, VIII, IX, X and XI are not independent and distinct inventions. This argument has been reviewed and deemed convincing. Group II is directed to an oligonucleotide comprising at least 8 contiguous nucleotides of an HCV nucleic acid according to Claim 43. An oligonucleotide comprising at least 8 contiguous nucleotides would encompass all 239 nucleotides of SEQ ID NO: 9. Thus, Group I and II are not distinct.

Similarly, Group III is drawn to a primer of at least 8 contiguous nucleotides from SEQ ID NO: 9. This open claim language encompasses the oligonucleotides of Groups I and II. Thus, Group I and II and III overlap in scope and are not distinct. Embodiments found within Groups IV-XI are similarly encompassed within Group I.

Groups I-XI are all drawn to oligonucleotides which can be used to detect HCV and therefore they are related in operation and effect. For this reason, the oligonucleotides of Groups I-XI are not independent inventions.

As correctly pointed out by the petition, the inventions of Groups I-XI are not independent and they are not distinct. Claims in one group overlap in scope with Claims in another group set forth in the requirement for restriction. Thus, the groups set forth in the requirement for restriction are not independent of each other and they are not patentably distinct from each other.

The requirement for restriction between Groups I-XI has been withdrawn.

Similarly, as argued by the response (page 2 of Petition), Groups XII and XIII overlap in scope and are not patentably distinct from each other. The proteins of Groups XII and XIII (Claims 51-54, 71-72, 80-82, 86, 90) have been rejoined.

The petition asserts Groups XIV, XV, XVI, XVII, XIX, XX and XXI are not independent and they are not distinct from each other. This argument has been reviewed and is deemed persuasive in part.

Claims 58-65 were placed in Groups XIV and XV, but they are all directed to a method for detecting the presence of HCV using an oligonucleotide probe (Classified in 435/6). However, Claims 68-69, 70, 75-78 were placed in Groups XVI, XVII, XVIII, XIX, XX, but they are all are drawn to a method of detecting HCV using proteins and antibodies (classified in 435/7.1). Thus, Groups of XIV and XV have been rejoined with each other. Also, the methods of Groups XVI, XVII, XIX, XX (Claims 68-70, 75-78) have been rejoined with each other. However the restriction requirement between (XIV/XV) and (XVI, XVII, XIX, XX) is maintained because for detecting HCV using nucleic acid oligonucleotide and methods for detecting HCV using antibodies are patentably distinct from each other. The methods rely on different regents for detection. Moreover, a search for nucleic acid methods is not coextensive with a search for antibody methods and vice versa.

The requirement for restriction erroneously indicated that claims 55-57, 66-67, 83, 91 were linking claims. This is not correct because claims 55-57, 66-67, 83, 91 are not linking claims. If claim 55, for example, were allowable, it would not indicate that the linked inventions, as

claimed, were allowable. The claims directed to the linked inventions are broader in scope that the so-called linking claims. Linking claims must be broader in scope than and encompass the elected and linked inventions.

With respect to the request for rejoinder of sequences of SEQ ID NO: 1, 2, 9, 10 and 16, the restriction requirement between SEQ ID No 9 and 10 has been withdrawn because SEQ ID NO: 9 and 10 are over 99% similar and the scope of the claims requiring at least 8 contiguous nucleotides is overlapping between the two groups.

With respect to the request for rejoinder of sequences of SEQ ID NO: 1, 2, 16, an alignment of the other 3 sequences did not yield any significant similarity. The requirement for restriction between SEQ ID NO 1, 2 and 16 is maintained.

The examiner has required restriction between product and process claims. Where applicant elects claims directed to the product, and the product claims are subsequently found allowable, withdrawn process claims that depend from or otherwise require all the limitations of the allowable product claim will be considered for rejoinder. All claims directed to a nonelected process invention must require all the limitations of an allowable product claim for that process invention to be rejoined.

In the event of rejoinder, the requirement for restriction between the product claims and the rejoined process claims will be withdrawn, and the rejoined process claims will be fully examined for patentability in accordance with 37 CFR 1.104. Thus, to be allowable, the rejoined claims must meet all criteria for patentability including the requirements of 35 U.S.C. 101, 102, 103 and 112. Until all claims to the elected product are found allowable, an otherwise proper restriction requirement between product claims and process claims may be maintained. Withdrawn process claims that are not commensurate in scope with an allowable product claim will not be rejoined. See MPEP § 821.04(b). Additionally, in order to retain the right to rejoinder in accordance with the above policy, applicant is advised that the process claims should be amended during prosecution to require the limitations of the product claims. Failure to do so may result in a loss of the right to rejoinder. Further, note that the prohibition against double patenting rejections of 35 U.S.C. 121 does not apply where the restriction requirement is withdrawn by the examiner before the patent issues. See MPEP § 804.01.

DECISION

The petition is **GRANTED–IN-PART** for the reasons set forth above.

To recap a revised grouping is appropriate:

> Revised Group I, Claims 43-50, 55-57, 66, 67, 81, 83, 85, 87, 93, drawn to nucleic acids, vectors and host cells and methods of culturing host cells to produce nucleic acids, Classified in 536/23.1.

Revised Group II, Claims 51-54, 71-72, 80-82, 86, 90, drawn to proteins, classified in 530/350.

Revised Group III, Claims 58-65, drawn to methods for detecting HCV using nucleic acid oligonucleotides, classified in 435/6.

Revised Group IV, Claims 68-70, 75-78, drawn to methods for detecting HCV using antibodies, classified in 435/7.1.

Revised Group V, Claims 73-74, 79, 84, 88, 92, drawn to antibodies, classified in 530/387.1.

Applicant has elected and received an examination on the merits for Group I, SEQ ID No 9.

Groups II, III, IV, V, VI, VII, VIII, IX, X and XI, Claims 45-50, are rejoined with Group I, Claims 43, 44, 81, 85, 89, 55-57, 66, 67, 83, 91, already under examination, and said claims will be examined together.

SEQ ID No 9 rejoined with SEQ ID No 10.

The restriction requirement between elected SEQ ID No 9/10 and each of non-elected SEQ ID Nos 1, 2 and 16 is maintained.

The application will be forwarded to the examiner for consideration of the papers filed 26 February 2007 and for preparation of a non-final Office action consistent with this decision.

Any request for reconsideration must be filed within two (2) months of the mailing date of this decision.

Should there be any questions about this decision, please contact Special Program Examiner Julie Burke, by letter addressed to Director, Technology Center 1600, at the address listed above, or by telephone at 571-272-1600 or by facsimile sent to the general Office facsimile number, 571-273-8300.

John LeGuyader
Director, Technology Center 1600
jb/jg

UNITED STATES PATENT AND TRADEMARK OFFICE

COMMISSIONER FOR PATENTS
UNITED STATES PATENT AND TRADEMARK OFFICE
P.O. BOX 1450
ALEXANDRIA, VA 22313-1450
www.uspto.gov
DIW Aug-07

FISH & NEAVE IP GROUP
ROPES & GRAY LLP
1211 AVENUE OF THE AMERICAS
NEW YORK NY 10036-8704

COPY MAILED

AUG 3 1 2007

OFFICE OF PETITIONS

In re Application of	:	
Todd Blake	:	
Application No. 10/927582	:	ON PETITION
Filed: 08/26/2004	:	
For: SCHEDULE SYSTEM WITH	:	
ENHANCED RECORDING CAPABILITY	:	

This is a decision on the petition to withdraw the holding of abandonment filed on 3 August, 2007. This is also a decision on the petition to revive the above-identified application under 37 CFR 1.137(b),[1] filed on 29 August, 2007, and the petition for expedited consideration under 37 CFR 1.182, filed on 29 August, 2007.

---

[1] Effective December 1, 1997, the provisions of 37 CFR 1.137(b) now provide that where the delay in reply was unintentional, a petition may be filed to revive an abandoned application or a lapsed patent pursuant to 37 CFR 1.137(b). A grantable petition filed under the provisions of 37 CFR 1.137(b) must be accompanied by:

(1) the required reply, unless previously filed. In a nonprovisional application abandoned for failure to prosecute, the required reply may be met by the filing of a continuing application. In a nonprovisional utility or plant application filed on or after June 8, 1995, and abandoned for failure to prosecute, the required reply may also be met by the filing of a request for continuing examination in compliance with § 1.114. In an application or patent, abandoned or lapsed for failure to pay the issue fee or any portion thereof, the required reply must be the payment of the issue fee or any outstanding balance thereof. In an application, abandoned for failure to pay the publication fee, the required reply must include payment of the publication fee.

(2) the petition fee as set forth in 37 CFR 1.17(m);

(3) a statement that the entire delay in filing the required reply from the due date for the reply until the filing of a grantable petition pursuant to 37 CFR 1.137(b) was unintentional. The Commissioner may required additional information where there is a question whether the delay was unintentional; and

(4) any terminal disclaimer (and fee as set forth in 37 CFR 1.20(d)) required pursuant to 37 CFR 1.137(c)).

The petition to withdraw the holding of abandonment is **DISMISSED AS MOOT.**

The petition for expedited consideration is **GRANTED.**

The petition under 37 CFR 1.137(b) is **GRANTED.**

On 26 August, 2004, the above-identified application was filed. On 25 January, 2007, a final Office action was mailed, setting a three (3) month shortened statutory period for reply. No extensions of the period for reply in accordance with 37 CFR 1.136(a) were filed. Accordingly, the application became abandoned on 26 April, 2007, for failure to timely respond to the Office action mailed on 25 January, 2007. Notice of Abandonment was mailed on 13 August, 2007.

PETITION TO WITHDRAW THE HOLDING OF ABANDONMENT.

A petition to withdraw the holding of abandonment was filed on 3 August, 2007. On 29 August, 2007, however, petitioner filed a "REQUEST TO WITHDRAW PETITION FILED UNDER 37 C.F.R. § 1.181 AND PETITION UNDER 37 C.F.R. 1.182 FOR EXPEDITED CONSIDERATION OF PETITION TO REVIVE UNDER 37 C.F.R. § 1.137(b)," requesting that the petition under 37 CFR 1.181 to withdraw the holding of abandonment be withdrawn.

Accordingly, in view of petitioner's request to withdraw the petition, the petition to withdraw the holding of abandonment is **dismissed as moot.**

As no fee is required for a petition to withdraw the holding of abandonment, the $130.00 fee paid with the petition will be credited to counsel's deposit account.

PETITION UNDER 37 CFR 1.137(b).

The petition is accompanied by a Notice of Appeal and fee as the required reply.

The Notice of Appeal filed 29 August, 2007, has been entered and made of record. Accordingly, the two (2)-month period for filing the Appeal Brief, in triplicate, accompanied by the fee required by law, runs from the date of this decision.

Receipt of the power of attorney and change of correspondence address filed on 29 August, 2007, is acknowledged.

The application will be referred to Technology Center Art Unit 2621 for further processing.

Telephone inquiries related to this decision should be directed to the undersigned at 571-272-3231.

DWood

Douglas I. Wood
Senior Petitions Attorney
Office of Petitions

UNITED STATES PATENT AND TRADEMARK OFFICE

Commissioner for Patents
United States Patent and Trademark Office
P.O. Box 1450
Alexandria, VA 22313-1450
www.uspto.gov

Fenwick & West LLP
Silicon Valley Center
801 California Street
Mountain View, CA 94041

COPY MAILED

FEB 2 0 2008

OFFICE OF PETITIONS

In re Application of	:	
Rina Panigrahy et al.	:	
Application No. 10/927,602	:	DECISION ON PETITION
Filed: August 25, 2004	:	TO WITHDRAW
Attorney Docket No. 03311.0015U3	:	FROM RECORD
	:	

This is a decision on the Request to Withdraw as attorney or agent of record under 37 C.F.R. § 1.36(b), filed October 12, 2007.

The request is **NOT APPROVED** as moot.

A review of the file record indicates that the power of attorney to Fenwick & West LLP has been revoked by the assignee of the patent application on January 24, 2008. Accordingly, the request to withdraw under 37 C.F.R. § 1.36(b) is moot.

All future communications from the Office will continue to be directed to the below-listed address until otherwise notified by applicant.

Telephone inquires concerning this decision should be directed to Terri Williams at 571-272-2991.

T. Williams
Terri Williams
Petitions Examiner
Office of Petitions

cc: **Needle & Rosenberg, P.C.**
Suite 1000
999 Peachtree Street
Atlanta, GA 30309-3915

UNITED STATES PATENT AND TRADEMARK OFFICE

COMMISSIONER FOR PATENTS
UNITED STATES PATENT AND TRADEMARK OFFICE
P.O. BOX 1450
ALEXANDRIA, VA 22313-1450
www.uspto.gov

WEATHERLY KERVEN & SEIGEL LLC
115 PERIMETER CENTER PLACE
SUITE 1082
ATLANTA, GA 30346-1245

COPY MAILED
SEP 29 2006
OFFICE OF PETITIONS

In re Application of	:
Richard J. Gordon, et al.	:
Application No. 10/927,630	: DECISION ON PETITION
Filed: August 26, 2004	: UNDER 37 CFR 1.78(a)(3)
Attorney Docket No. CO11.P001U5	:

This is a decision on the petition under 37 CFR 1.78(a)(3), filed September 18, 2006, to accept an unintentionally delayed claim under 35 U.S.C. § 120 for the benefit of priority to the prior-filed nonprovisional application set forth in the amendment filed with the petition.

The petition is **GRANTED**.

A petition for acceptance of a claim for late priority under 37 CFR 1.78(a)(3) is only applicable to those applications filed on or after November 29, 2000. Further, the petition is appropriate only after the expiration of the period specified in 37 CFR 1.78(a)(2)(ii). In addition, the petition under 37 CFR 1.78(a)(3) must be accompanied by:

(1) the reference required by 35 U.S.C. § 120 and 37 CFR 1.78(a)(2)(i) of the prior-filed application, unless previously submitted;
(2) the surcharge set forth in § 1.17(t); and
(3) a statement that the entire delay between the date the claim was due under 37 CFR 1.78(a)(2)(ii) and the date the claim was filed was unintentional. The Director may require additional information where there is a question whether the delay was unintentional.

All of the above requirements having been satisfied, the late claim for priority under 35 U.S.C. § 120 is accepted as being unintentionally delayed.

The granting of the petition to accept the delayed benefit claim to the prior-filed application under 37 CFR 1.78(a)(3) should not be construed as meaning that this application is entitled to the benefit of the prior-filed application. In order for this application to be entitled to the benefit of the prior-filed application, all other requirements under 35 U.S.C. § 120 and 37

CFR 1.78(a)(1) and (a)(2) must be met. Similarly, the fact that the corrected Filing Receipt accompanying this decision on petition includes the prior-filed application should not be construed as meaning that applicant is entitled to the claim for benefit of priority to the prior-filed application noted thereon. Accordingly, the examiner will, in due course, consider this benefit claim and determine whether the application is entitled to the benefit of the earlier filing date.

A corrected Filing Receipt, which includes the priority claim to the prior-filed nonprovisional applications, accompanies this decision on petition.

Any inquiries concerning this decision may be directed to Sherry D. Brinkley at (571) 272-3204. All other inquiries concerning either the examination procedures or status of the application should be directed to the Technology Center.

This application is being forwarded to Technology Center Art Unit 2625 for consideration by the examiner of applicant's entitlement to claim benefit of priority under 35 U.S.C. § 120 to the prior-filed application.

Sherry D. Brinkley
Petitions Examiner
Office of Petitions

Frances M. Hicks
Lead, Petitions Examiner
Office of Petitions

ATTACHMENT: Corrected Filing Receipt

UNITED STATES PATENT AND TRADEMARK OFFICE

UNITED STATES DEPARTMENT OF COMMERCE
United States Patent and Trademark Office
Address: COMMISSIONER FOR PATENTS
P.O. Box 1450
Alexandria, Virginia 22313-1450
www.uspto.gov

APPL NO.	FILING OR 371 (c) DATE	ART UNIT	FIL FEE REC'D	ATTY.DOCKET NO	DRAWINGS	TOT CLMS	IND CLMS
10/927,630	08/26/2004	2625	2070	CO11.POO1U5	10	1	1

CONFIRMATION NO. 2882

CORRECTED FILING RECEIPT

OC000000020610469

35564
WEATHERLY KERVEN & SEIGEL LLC
115 PERIMETER CENTER PLACE
SUITE 1082
ATLANTA, GA 30346-1245

Date Mailed: 09/27/2006

Receipt is acknowledged of this regular Patent Application. It will be considered in its order and you will be notified as to the results of the examination. Be sure to provide the U.S. APPLICATION NUMBER, FILING DATE, NAME OF APPLICANT, and TITLE OF INVENTION when inquiring about this application. Fees transmitted by check or draft are subject to collection. Please verify the accuracy of the data presented on this receipt. **If an error is noted on this Filing Receipt, please mail to the Commissioner for Patents P.O. Box 1450 Alexandria Va 22313-1450. Please provide a copy of this Filing Receipt with the changes noted thereon. If you received a "Notice to File Missing Parts" for this application, please submit any corrections to this Filing Receipt with your reply to the Notice. When the USPTO processes the reply to the Notice, the USPTO will generate another Filing Receipt incorporating the requested corrections (if appropriate).**

Applicant(s)

Richard J. Gordon, Los Angeles, CA;
James R. Kennedy, Tucson, AZ;

Assignment For Published Patent Application

Audiofax IP LLC

Power of Attorney: The patent practitioners associated with Customer Number **35564**.

Domestic Priority data as claimed by applicant

This application is a CON of 09/717,996 11/21/2000 PAT 6,785,021
which is a CON of 09/686,306 10/11/2000 PAT 6,643,034
which is a CON of 08/780,690 01/08/1997 ABN
which is a CON of 08/395,062 02/27/1995 ABN
which is a CON of 08/371,842 01/12/1995 PAT 5,459,584
which is a CON of 08/166,701 12/14/1993 ABN
which is a CON of 07/955,833 10/02/1992 PAT 5,291,302
which is a CON of 07/654,181 02/12/1991 ABN
which is a CIP of 07/248,798 09/22/1988 PAT 4,994,926

Foreign Applications

If Required, Foreign Filing License Granted: 10/27/2004

The country code and number of your priority application, to be used for filing abroad under the Paris Convention, is US10/927,630

Projected Publication Date: Not Applicable

Non-Publication Request: No

Early Publication Request: No

Title

FACSIMILE TELECOMMUNICATIONS SYSTEM AND METHOD

Preliminary Class

358

PROTECTING YOUR INVENTION OUTSIDE THE UNITED STATES

Since the rights granted by a U.S. patent extend only throughout the territory of the United States and have no effect in a foreign country, an inventor who wishes patent protection in another country must apply for a patent in a specific country or in regional patent offices. Applicants may wish to consider the filing of an international application under the Patent Cooperation Treaty (PCT). An international (PCT) application generally has the same effect as a regular national patent application in each PCT-member country. The PCT process **simplifies** the filing of patent applications on the same invention in member countries, but **does not result** in a grant of "an international patent" and does not eliminate the need of applicants to file additional documents and fees in countries where patent protection is desired.

Almost every country has its own patent law, and a person desiring a patent in a particular country must make an application for patent in that country in accordance with its particular laws. Since the laws of many countries differ in various respects from the patent law of the United States, applicants are advised to seek guidance from specific foreign countries to ensure that patent rights are not lost prematurely.

Applicants also are advised that in the case of inventions made in the United States, the Director of the USPTO must issue a license before applicants can apply for a patent in a foreign country. The filing of a U.S. patent application serves as a request for a foreign filing license. The application's filing receipt contains further information and guidance as to the status of applicant's license for foreign filing.

Applicants may wish to consult the USPTO booklet, "General Information Concerning Patents" (specifically, the section entitled "Treaties and Foreign Patents") for more information on timeframes and deadlines for filing foreign patent applications. The guide is available either by contacting the USPTO Contact Center at 800-786-9199, or it can be viewed on the USPTO website at http://www.uspto.gov/web/offices/pac/doc/general/index.html.

For information on preventing theft of your intellectual property (patents, trademarks and copyrights), you may wish to consult the U.S. Government website, http://www.stopfakes.gov. Part of a Department of Commerce initiative, this website includes self-help "toolkits" giving innovators guidance on how to protect intellectual property in specific countries such as China, Korea and Mexico. For questions regarding patent enforcement issues, applicants may call the U.S. Government hotline at 1-866-999-HALT (1-866-999-4158).

LICENSE FOR FOREIGN FILING UNDER
Title 35, United States Code, Section 184
Title 37, Code of Federal Regulations, 5.11 & 5.15

GRANTED

The applicant has been granted a license under 35 U.S.C. 184, if the phrase "IF REQUIRED, FOREIGN FILING

LICENSE GRANTED" followed by a date appears on this form. Such licenses are issued in all applications where the conditions for issuance of a license have been met, regardless of whether or not a license may be required as set forth in 37 CFR 5.15. The scope and limitations of this license are set forth in 37 CFR 5.15(a) unless an earlier license has been issued under 37 CFR 5.15(b). The license is subject to revocation upon written notification. The date indicated is the effective date of the license, unless an earlier license of similar scope has been granted under 37 CFR 5.13 or 5.14.

This license is to be retained by the licensee and may be used at any time on or after the effective date thereof unless it is revoked. This license is automatically transferred to any related applications(s) filed under 37 CFR 1.53(d). This license is not retroactive.

The grant of a license does not in any way lessen the responsibility of a licensee for the security of the subject matter as imposed by any Government contract or the provisions of existing laws relating to espionage and the national security or the export of technical data. Licensees should apprise themselves of current regulations especially with respect to certain countries, of other agencies, particularly the Office of Defense Trade Controls, Department of State (with respect to Arms, Munitions and Implements of War (22 CFR 121-128)); the Bureau of Industry and Security, Department of Commerce (15 CFR parts 730-774); the Office of Foreign Assets Control, Department of Treasury (31 CFR Parts 500+) and the Department of Energy.

NOT GRANTED

No license under 35 U.S.C. 184 has been granted at this time, if the phrase "IF REQUIRED, FOREIGN FILING LICENSE GRANTED" DOES NOT appear on this form. Applicant may still petition for a license under 37 CFR 5.12, if a license is desired before the expiration of 6 months from the filing date of the application. If 6 months has lapsed from the filing date of this application and the licensee has not received any indication of a secrecy order under 35 U.S.C. 181, the licensee may foreign file the application pursuant to 37 CFR 5.15(b).

UNITED STATES PATENT AND TRADEMARK OFFICE

Commissioner for Patents
United States Patent and Trademark Office
P.O. Box 1450
Alexandria, VA 22313-1450
www.uspto.gov

FOLEY AND LARDNER LLP
SUITE 500
3000 K STREET NW
WASHINGTON, DC 20007

COPY MAILED

DEC 18 2007

OFFICE OF PETITIONS

In re Application of	:	
Ranjan Perera, et al.	:	
Application No. 10/927,641	:	DECISION ON PETITION
Filed: August 27, 2004	:	TO WITHDRAW
Attorney Docket No. 044463-0292	:	FROM RECORD
	:	

This is a decision on the Request to Withdraw as attorney or agent of record under 37 C.F.R. § 1.36(b) filed August 3, 2007.

The request is **APPROVED**.

A grantable request to withdraw as attorney/agent of record must be signed by every attorney/agent seeking to withdraw or contain a clear indication that one attorney is signing on behalf of another/others. A request to withdraw will not be approved unless at least 30 (thirty) days would remain between the date of approval and the later of the expiration date of a time to file a response or the expiration date of the maximum time period which can be extended under 37 C.F.R. § 1.136(a).

The request was signed by Richard C. Peet on behalf of all attorneys of record who are associated with customer No. 22428.

All attorneys/agents associated with the Customer Number 22428 have been withdrawn.

Applicant is reminded that there is no attorney of record at this time.

The request to change the correspondence of record is not acceptable as the requested correspondence address is not that of: (1) the first named signing inventor; or (2) an intervening assignee of the entire interest under 37 C.F.R 3.71. All future communications from the Office will be directed to the first named signing inventor at the first copied address below until otherwise properly notified by the applicant.

In order to request or take action in a patent matter, the assignee must establish its ownership of the patent to the satisfaction of the Director. In this regard, a Statement under 37 CFR 3.73(b) must have either: (i) documentary evidence of a chain of title from the original owner to the assignee (*e.g.*, copy of an executed assignment), and a statement affirming that the documentary evidence of the chain of title from the original owner to the assignee was or concurrently is being submitted for recordation pursuant to § 3.11; or (ii) a statement specifying where documentary evidence of a chain of title from the original owner to the assignee is recorded in the assignment records of the Office (*e.g.*, reel and frame number).

There is an outstanding Office action mailed November 27, 2007 that requires a reply from the applicant.

Telephone inquiries concerning this decision should be directed to undersigned at 571-272-1642.

April M. Wise
Petitions Examiner
Office of Petitions

cc: RANJAN PERERA
1909 B ALGA ROAD
CARLSBAD, CA 92009

cc: JAYME HULEATT
COOLEY GODWARD & KRONISH
1200 19TH STREET NW
5TH FLOOR
WASHINGTON, DC 20036

UNITED STATES PATENT AND TRADEMARK OFFICE

UNITED STATES DEPARTMENT OF COMMERCE
United States Patent and Trademark Office
Address: COMMISSIONER FOR PATENTS
P.O. Box 1450
Alexandria, Virginia 22313-1450
www.uspto.gov

APPLICATION NUMBER	FILING OR 371(C) DATE	FIRST NAMED APPLICANT	ATTY. DOCKET NO./TITLE
10/927,641	08/27/2004	Ranjan Perera	044463-0292

CONFIRMATION NO. 4409

POWER OF ATTORNEY NOTICE

22428
FOLEY AND LARDNER LLP
SUITE 500
3000 K STREET NW
WASHINGTON, DC 20007

OC000000027316500

Date Mailed: 12/17/2007

NOTICE REGARDING CHANGE OF POWER OF ATTORNEY

This is in response to the Power of Attorney filed 08/03/2007.

- The withdrawal as attorney in this application has been accepted. Future correspondence will be mailed to the new address of record. 37 CFR 1.33.

/amwise/

Office of Initial Patent Examination (571) 272-4000 or 1-800-PTO-9199

UNITED STATES PATENT AND TRADEMARK OFFICE

Commissioner for Patents
United States Patent and Trademark Office
P.O. Box 1450
Alexandria, VA 22313-1450
www.uspto.gov

VENTURE PACIFIC LAW, PC
5201 GREAT AMERICA PARKWAY, SUITE 270
SANTA CLARA CA 95054

MAILED

JUN 11 2009

OFFICE OF PETITIONS

In re Application of	:	
Chuanfu Wang	:	
Application No. 10/927,670	:	DECISION ON PETITION
Filed: August 26, 2004	:	
Attorney Docket No. BYD-US2003-012	:	

This is a decision on the petition under the unintentional provisions of 37 CFR 1.137(b), filed April 20, 2009, to revive the above-identified application.

The petition is **DISMISSED**.

Any request for reconsideration of this decision must be submitted within TWO (2) MONTHS from the mail date of this decision. Extensions of time under 37 CFR 1.136(a) are permitted. The reconsideration request should include a cover letter entitled "Renewed Petition under 37 CFR 1.137(b)." This is **not** a final agency action within the meaning of 5 U.S.C. § 704.

The application became abandoned for failure to reply in a timely manner to the Restriction Requirement mailed June 22, 2006, which set a shortened statutory period for reply of one (1) month or thirty (30) days (whichever is later). No extensions of time under the provisions of 37 CFR 1.136(a) were obtained. Accordingly, the application became abandoned on July 23, 2006. A Notice of Abandonment was mailed January 19, 2007.

It is noted that Mr. Emil Chang, while not a proper Power of Attorney, has handled prosecution of the above-identified application since its filing. The Oath or Declaration filed August 26, 2004 appoints the customer number 33139 as the correspondence address only, no power of attorney has been appointed in the above-identified application. However, Mr. Chang is recognized as the attorney handling the prosecution of the above-identified application from the time of filing on August 26, 2004.

A grantable petition under 37 CFR 1.137(b) must be accompanied by: (1) the required reply, unless previously filed; (2) the petition fee as set forth in 37 CFR 1.17(m); (3) a statement that the entire delay in filing the required reply from the due date for the reply until the filing of a grantable petition pursuant to 37 CFR 1.137(b) was unintentional; and (4) any terminal disclaimer (and fee as set forth in 37 CFR 1.20(d)) required by 37 CFR 1.137(d). Where there is a question as to whether either the abandonment or the delay in filing a petition under 37 CFR 1.137 was unintentional, the Director may require additional information. *See* MPEP 711.03(c)(II)(C) and (D). The instant petition lacks item (3).

There are three periods to be considered during the evaluation of a petition under 37 CFR 1.137(b):

(1) the delay in reply that originally resulted in the abandonment;
(2) the delay in filing an initial petition pursuant to 37 CFR 1.137(b) to revive the application; and
(3) the delay in filing a grantable petition pursuant to 37 CFR 1.137(b) to revive the application.

Currently, the delay has not been shown to the satisfaction of the Director to be unintentional for periods (1) and (2).

As to Period (1):

The patent statute at 35 U.S.C. § 41(a)(7) authorizes the Director to revive an "unintentionally abandoned application." The legislative history of Public Law 97-247 reveals that the purpose of 35 U.S.C. § 41(a)(7) is to permit the Office to have more discretion than in 35 U.S.C. §§ 133 or 151 to revive abandoned applications in appropriate circumstances, but places a limit on this discretion, stating that "[u]nder this section a petition accompanied by either a fee of $500 or a fee of $50 **would not be granted where the abandonment** or the failure to pay the fee for issuing the patent **was intentional** as opposed to being unintentional or unavoidable." [emphasis added]. See H.R. Rep. No. 542, 97th Cong., 2d Sess. 6-7 (1982), *reprinted in* 1982 U.S.C.C.A.N. 770-71. The revival of an intentionally abandoned application is antithetical to the meaning and intent of the statute and regulation.

35 U.S.C. § 41(a)(7) authorizes the Director to accept a petition "for the revival of an unintentionally abandoned application for a patent." As amended December 1, 1997, 37 CFR 1.137(b)(3) provides that a petition under 37 CFR 1.137(b) must be accompanied by a statement that the delay was unintentional, but provides that "[t]he Commissioner may require additional information where there is a question whether the delay was unintentional." Where, as here, there is a question whether the initial delay was unintentional, the petitioner must meet the burden of establishing that the delay was unintentional within the meaning of 35 U.S.C. § 41(a)(7) and 37 CFR 1.137(b). *See* In re Application of G, 11 USPQ2d 1378, 1380 (Comm'r Pats. 1989); 37 CFR 1.137(b). Here, in view of the inordinate delay (almost three years) in resuming prosecution, there is a question whether the entire delay was unintentional. Petitioner should note that the issue is not whether some of the delay was unintentional by any party; rather, the issue is whether the entire delay has been shown to the satisfaction of the Director to be unintentional.

The question under 37 CFR 1.137(b) for period (1) is whether the delay on the part of the party prosecuting and handling the application, to reply to avoid abandonment (or not reply) was unintentional. Accordingly, any renewed petition must clearly identify the party handling the prosecution of the application to reply to avoid abandonment on July 23, 2006. That party, in turn must explain what effort(s) was made to further reply to the outstanding Office action and, further, why no reply was filed. If no effort was made to further reply, then that party must explain why the delay in this application does not result from a deliberate course of action (or inaction). Likewise, as Mr. Chang was handling prosecution at the time of abandonment, he should explain why this application became abandoned while it was under his handling of the application and what efforts were made to further reply of itself and with whom this matter was discussed outside of the practice of Mr. Chang. Copies of any correspondence relating to the filing, or to not filing a further reply to the outstanding Office action are required from responsible person(s), Mr. Chang and whoever else was involved with this application at the time of abandonment. Statements are required from any and all persons then at the practice of Mr. Chang, and the responsible person(s) having firsthand knowledge of the circumstances surrounding the lack of a reply to the outstanding Office action. As the courts have made clear, it is pointless for the USPTO to revive a long abandoned application without an adequate showing that the delay did not result from a deliberate course of action. *See* Lawman Armor v. Simon, 2005 U.S. Dist. LEXIS 10843, 74 USPQ2d 1633 (DC EMich 2005); Field Hybrids, LLC v. Toyota Motor Corp., 2005 U.S. Dist. LEXIS 1159 (D. Minn Jan. 27, 2005); Lumenyte Int'l Corp. v. Cable Lite Corp., Nos. 96-1011, 96-1077, 1996 U.S. App. LEXIS 16400, 1996 WL 383927 (Fed. Cir. July 9, 1996) (unpublished) (patents held unenforceable due to a finding of inequitable conduct in submitting an inappropriate statement that the abandonment was unintentional).

As to Period (2):

Likewise, where the applicant deliberately chooses not to seek or persist in seeking the revival of an abandoned application, or where the applicant deliberately chooses to delay seeking the revival of an abandoned application, the resulting delay in seeking revival of the abandoned application cannot be considered as "unintentional" within the meaning of 37 CFR 1.137(b). *See* MPEP 711.03(c).

The language of both 35 U.S.C. § 41(a)(7) and 37 CFR 1.137(b) are clear and unambiguous, and, furthermore, without qualification. That is, the delay in filing the reply during prosecution, as well as in filing the petition seeking revival, must have been, without qualification, "unintentional" for the reply to now be accepted on petition. The Office requires that the entire

delay be at least unintentional as a prerequisite to revival of an abandoned application to prevent abuse and injury to the public. *See* H.R. Rep. No. 542, 97th Cong., 2d Sess. 7 (1982), reprinted in 1982 U.S.C.C.A.N. 771 ("[i]n order to prevent abuse and injury to the public the Commissioner . . . could require applicants to act promptly after becoming aware of the abandonment"). The December 1997 change to 37 CFR 1.137 did not create any new right to overcome an intentional delay in seeking revival, or in renewing an attempt at seeking revival, of an abandoned application. *See* Changes to Patent Practice and Procedure; Final Rule Notice, 62 Fed. Reg. 53131, 53160 (October 10, 1997), 1203 Off. Gaz. Pat. Office 63, 87 (October 21, 1997), which clearly stated that any protracted delay (here, almost three years) could trigger, as here, a request for additional information. As the courts have since made clear, a protracted delay in seeking revival, as here, requires a petitioner's detailed explanation seeking to excuse the delay as opposed to USPTO acceptance of a general allegation of unintentional delay. *See* Lawman Armor v. Simon, 2005 U.S. Dist. LEXIS 10843, 74 USPQ2d 1633, at 1637-8 (DC EMich 2005); Field Hybrids, LLC v. Toyota Motor Corp., 2005 U.S. Dist. LEXIS 1159 (D. Minn Jan. 27, 2005) at *21-*23. Statements are required from any and all persons then at the practice of Mr. Chang and the responsible person(s) having firsthand knowledge of the circumstances surrounding the protracted delay, after the abandonment date, in seeking revival. Including, but not limited to, Emil Chang.

As noted in MPEP 711.03(c)(II), subsection D, in instances in which such petition was not filed within 1 year of the date of abandonment of the application, applicants should include:

> (A) the date that the applicant first became aware of the abandonment of the application; and
> (B) a showing as to how the delay in discovering the abandoned status of the application occurred despite the exercise of due care or diligence on the part of the applicant.

In either instance, applicant's failure to carry the burden of proof to establish that the "entire" delay was "unavoidable" or "unintentional" may lead to the denial of a petition under 37 CFR 1.137(b), regardless of the circumstances that originally resulted in the abandonment of the application. *See also* New York University v. Autodesk, 2007 U.S. DIST LEXIS, U.S. District LEXIS 50832, *10 -*12 (S.D.N.Y. 2007)(protracted delay in seeking revival undercuts assertion of unintentional delay).

Any renewed petition may be addressed as follows:

By Mail:
Mail Stop PETITION
Commissioner for Patents
P. O. Box 1450
Alexandria, VA 22313-1450

By hand:
U. S. Patent and Trademark Office
Customer Service Window, Mail Stop Petitions
Randolph Building
401 Dulany Street
Alexandria, VA 22314

The centralized facsimile number is **(571) 273-8300.**

Correspondence regarding this decision may also be filed through the electronic filing system of the USPTO.

To expedite consideration, petitioner may wish to contact the undersigned regarding the filing of the renewed petition under 37 CFR 1.137(b).

Telephone inquiries concerning this decision should be directed to Joan Olszewski at (571) 272-7751.

/Liana Walsh/
Liana Walsh
Petitions Examiner
Office of Petitions

UNITED STATES PATENT AND TRADEMARK OFFICE

Commissioner for Patents
United States Patent and Trademark Office
P.O. Box 1450
Alexandria, VA 22313-1450
www.uspto.gov

VENTURE PACIFIC LAW, PC
5201 GREAT AMERICA PARKWAY, SUITE 270
SANTA CLARA CA 95054

COPY MAILED

OCT 0 7 2009

OFFICE OF PETITIONS

In re Application of	:	
Chuanfu Wang	:	
Application No. 10/927,670	:	DECISION ON PETITION
Filed: August 26, 2004	:	
Attorney Docket No. BYD-US2003-012	:	

This is a decision on the renewed petition under the unintentional provisions of 37 CFR 1.137(b), filed September 10, 2009, to revive the above-identified application.

The petition is **GRANTED**.

The application became abandoned for failure to reply in a timely manner to the Restriction Requirement mailed June 22, 2006, which set a shortened statutory period for reply of one (1) month or thirty (30) days (whichever is later). No extensions of time under the provisions of 37 CFR 1.136(a) were obtained. Accordingly, the application became abandoned on July 23, 2006. A Notice of Abandonment was mailed January 19, 2007.

The petition satisfies the requirements of 37 CFR 1.137(b) in that petitioner has supplied (1) the reply in the form of a response to the Restriction Requirement (previously filed April 20, 2009), (2) the petition fee of $1,620.00 (previously paid April 20, 2009) and (3) a proper statement of unintentional delay.

Telephone inquiries concerning this decision should be directed to the undersigned at (571)272-7751.

This application is being referred to Technology Center AU 1745 for appropriate action by the Examiner in the normal course of business on the reply previously submitted April 20, 2009.

Joan Olszewski

Joan Olszewski
Petitions Examiner
Office of Petitions

UNITED STATES PATENT AND TRADEMARK OFFICE

Commissioner for Patents
United States Patent and Trademark Office
P.O. Box 1450
Alexandria, VA 22313-1450
www.uspto.gov

STEPHEN L. KING
4642 OYSTER BAY ROAD NW
OLYMPIA, WA 98502

COPY MAILED

OCT 31 2006

OFFICE OF PETITIONS

In re Application of
Edmund J. Kelly
Application No. 10/927,681
Filed: August 27, 2004
Attorney Docket No. Orion1

DECISION ON PETITION
TO WITHDRAW
FROM RECORD

This is a decision on the Request to Withdraw as attorney or agent of record under 37 C.F.R. § 1.36(b), filed July 21, 2006.

The request is **NOT APPROVED**.

A grantable request to withdraw as attorney/agent of record must be signed by every attorney/agent seeking to withdraw or contain a clear indication that one attorney is signing on behalf of another/others. A request to withdraw will not be approved unless at least 30 (thirty) days would remain between the date of approval and the later of the expiration date of a time to file a response or the expiration date of the maximum time period which can be extended under 37 C.F.R. § 1.136(a).

The Office cannot approve the request at this time since the reasons provided do not meet any of the conditions under the mandatory or permissive categories enumerated in 37 CFR 10.40. Section 10.40 of Title 37 of the Code of Federal Regulation states, "[a] practitioner shall not withdraw from employment in a proceeding before the Office without permission from the Office[.]" More specifically, 37 CFR 10.40 states, "[i]f paragraph (b) of this section is not applicable, a practitioner may not request permission to withdraw in matter pending before the Office unless such request or such withdrawal is" for one the permissive reasons listed in 37 CFR 10.40(c). The reasons set forth in the request, "requested by assignee of the invention", does not meet any the conditions set forth in 37 CFR 10.40.

In order to request or take action in a patent matter, the assignee must establish its ownership of the patent to the satisfaction of the Director. In this regard, a Statement under 37 CFR 3.73(b) must have either: (i) documentary evidence of a chain of title from the original owner to the assignee (*e.g.*, copy of an executed assignment), and a statement affirming that the documentary evidence of the chain of title from the original owner to the assignee was or concurrently is being

submitted for recordation pursuant to § 3.11; or (ii) a statement specifying where documentary evidence of a chain of title from the original owner to the assignee is recorded in the assignment records of the Office (*e.g.*, reel and frame number).

All future communications from the Office will continue to be directed to the above-listed address until otherwise notified by applicant.

Telephone inquiries concerning this decision should be directed to April Wise 571-272-1642.

April M. Wise
Petitions Examiner
Office of Petitions

CC: ALBERT S. PENILLA, ESQ.
MARTINE PENILLA & GENCARELLA, LLP
710 LAKEWAY DRIVE
SUITE 200
SUNNYVALE, CA 94085

UNITED STATES PATENT AND TRADEMARK OFFICE

Commissioner for Patents
United States Patent and Trademark Office
P.O. Box 1450
Alexandria, VA 22313-1450
www.uspto.gov

QUARLES & BRADY, LLP
411 E. WISCONSIN AVENUE
SUITE 2040
MILWAUKEE, WI 53202-4497

COPY MAILED

NOV 14 2005

OFFICE OF PETITIONS

In re Application of	:	
Steven J. Benda	:	
Application No. 10/927,686	:	ON PETITION
Filed: August 27, 2004	:	
Attorney Docket No. 180825.00018	:	

This is a decision on the petition under 37 CFR 1.137(b), filed July 19, 2005, to revive the above-identified application.

The petition is **GRANTED**.

The application became abandoned for failure to respond to the Notice to File Corrected Application Papers mailed October 27, 2004.

The petition satisfies the requirements of 37 CFR 1.137(b) in that petitioner has supplied (1) the reply in the form of corrected drawings; (2) the petition fee of $1,500; and (3) an adequate statement of unintentional delay.

The application file is being referred to the Office of Initial Patent Examination for further processing.

Telephone inquiries concerning this decision should be directed to the undersigned at (571) 272-3226.

Andrea Smith
Petitions Examiner
Office of Petitions

UNITED STATES PATENT AND TRADEMARK OFFICE

Commissioner for Patents
United States Patent and Trademark Office
P.O. Box 1450
Alexandria, VA 22313-1450
www.uspto.gov

PEARNE & GORDON LLP
1801 EAST 9TH STREET
SUITE 1200
CLEVELAND OH 44114-3108

COPY MAILED
SEP 27 2006
OFFICE OF PETITIONS

In re Application of
Kricorissian et al.
Application No. 10/927,694
Filed: August 27, 2004
Title of Invention: Optical Image Reader

: DECISION ON PETITION

This is a decision on the petition under 37 CFR 1.48 and 1.183, filed March 20, 2006, to waive the rules of 37 CFR 1.48 (a)(2) to accept the executed declaration and a petition filed under 37 CFR 1.47.

The petition under 37 CFR 1.183 is **Granted**.
The petition under 37 CFR 1.48(a)(2) is **Granted.**

Petition Under 37 CFR 1.48

A grantable petition under 37 CFR 1.48 (a) requires: (1) a request to correct the inventorship that sets forth the desired inventorship change; (2) a statement from each person being added as an inventor and from each person being deleted as an inventor that the error in inventorship occurred without deceptive intention on his or her part; (3) an oath or declaration by the actual inventor or inventors as required by §1.63 or as permitted by §§ 1.42, 1.43 or §1.47; (4) the processing fee set forth in §1.17(i); and (5) if an assignment has been executed by any of the original named inventors, the written consent of the assignee.

The requirements of 37 CFR 1.48 have been met with the filing of a grantable petition under 37 CFR 1.183.

Petition Under 37 CFR 1.183

Suspension of the rules under 37 CFR 1.183 may be granted in an "extraordinary situation, when justice requires." The facts presented on the record adequately establishes an extraordinary situation. Petitioner has established inventor Kricorissian has refused to locate to reexecute the supplemental declaration. Further petitioner has

provided a statement from the assignee of record. Accordingly the petition is granted.

Telephone inquiries related to this decision may be directed to the undersigned at (571) 272-3215.

Charlema R. Grant
Petition Attorney
Office of Petitions

UNITED STATES PATENT AND TRADEMARK OFFICE

UNITED STATES DEPARTMENT OF COMMERCE
United States Patent and Trademark Office
Address: COMMISSIONER FOR PATENTS
P.O. Box 1450
Alexandria, Virginia 22313-1450
www.uspto.gov

MARK D. SARALINO (GENERAL)
RENNER, OTTO, BOISSELLE & SKLAR, LLP
1621 EUCLID AVENUE, NINETEENTH FLOOR
CLEVELAND, OH 44115-2191

Mail Date: 04/21/2010

Applicant	: Jonathan Mather	: DECISION ON REQUEST FOR
Patent Number	: 7580186	: RECALCULATION of PATENT
Issue Date	: 08/25/2009	: TERM ADJUSTMENT IN VIEW
Appliction No	: 10/927,724	: OF WYETH AND NOTICE OF INTENT TO
Filed	: 08/27/2004	: ISSUE CERTIFICATE OF CORRECTION
		:

The Request for Recalculation is **GRANTED** to the extent indicated.

The patent term adjustment has been determined to be **163** days. The USPTO will *sua sponte* issue a certificate of correction reflecting the amount of PTA days determined by the recalculation.

Prior to the issuance of the certificate of correction, the USPTO will afford patentee an opportunity to be heard and request reconsideration. Accordingly, patentee has **one month or thirty (30) days**, whichever is longer, to file a request for reconsideration of this patent term adjustment calculation. See 35 U.S.C. 154(b)(3)(B)(ii) and 37 CFR 1.322(a)(4). No extensions of time will be granted under 37 CFR 1.136.

Patentee should use document code PET.OP if electronically filing a request for reconsideration of this patent term adjustment calculation. The patentee must also include the information required by 37 CFR 1.705(b)(2) and the fee required by 37 CFR 1.18(e). If patentee does not file a timely request for reconsideration of this patent term adjustment calculation including the information required by 37 CFR 1.705(b)(2) and the fee required by 37 CFR 1.18(e), the USPTO will issue a certificate of correction reflecting the PTA determination noted above.

Patentee should be aware that in order to preserve the right to review in the United States District Court for the District of Columbia of the USPTO patent term adjustment determination, patentee must ensure that he or she also take the steps required under 35 U.S.C. 154(b)(4)(A) in a timely manner. Nothing in the request for recalculation should be construed as providing an alternative time frame for commencing a civil action under 35 U.S.C. 154(b)(4)(A).

Any questions concerning this decision should be directed to the Office of Patent Legal Administration at 571-272-7702.

UNITED STATES PATENT AND TRADEMARK OFFICE

Commissioner for Patents
United States Patent and Trademark Office
P.O. Box 1450
Alexandria, VA 22313-1450
www.uspto.gov

COPY MAILED

OCT 1 5 2008

OFFICE OF PETITIONS

AMIN HALLIHAN, LLC
444 NORTH ORLEANS STREET
SUITE 400
CHICAGO, IL 60654

In re Application of
Brian Paul Cortes, et al.
Application No. 10/927,727
Filed: August 27, 2004
Attorney Docket No. None

ON PETITION

This is a decision in response to the petition, filed July 6, 2008, to revive the above-identified application under the provisions of 37 CFR 1.137(b).

The petition is **GRANTED**.

The application became abandoned for a failure to reply in a timely manner to a non-final Office action mailed September 31, 2007, which set a shortened statutory period for reply of three (3) months. No extension of time under the provisions of 37 CFR 1.136(a) was obtained. Accordingly, the application became abandoned on December 1, 2007. A Notice of Abandonment was mailed on March 17, 2008. In response, on July 6, 2008, the present petition was filed.

There is no indication that the person signing the instant petition was ever given a power of attorney or authorization of agent to prosecute the above-identified application. However, in accordance with 37 CFR 1.34(a), the signature of Janine A. Moderson appearing on the petition shall constitute a representation to the United States Patent and Trademark Office that she is authorized to represent the particular party on whose behalf he acts.

The petition satisfies the requirements of 37 CFR 1.137(b) in that petitioner has supplied (1) the reply in the form of amendment; (2) the petition fee of $770; and (3) an adequate statement of unintentional delay[1].

The application is being referred to Technology Center AU 1655 for appropriate action by the Examiner in the normal course of business on the reply received July 6, 2008.

[1] 37 CFR 1.137(b)(3) requires a statement that the entire delay in filing the required reply from the due date for the reply until the filing of a grantable petition pursuant to 37 CFR 1.137(b) was unintentional. While the statement is not made by an attorney of record, such statement is being treated as having been made as the result of a reasonable inquiry into the facts and circumstances of such delay. See 37 CFR 10.18(b) and Changes to Patent Practice and Procedure; Final Rule Notice, 62 Fed. Reg. 53131, 53178 (October 10, 1997), 1203 Off. Gaz. Pat. Office 63, 103 (October 21, 1997). In the event that such an inquiry has not been made, petitioner must make such an inquiry. If such inquiry results in the discovery that it is not correct that the entire delay in filing the required reply from the due date for the reply until the filing of a grantable petition pursuant to 37 CFR 1.137(b) was unintentional, petitioner must notify the Office.

Telephone inquiries concerning this decision should be directed to the undersigned at (571) 272-3204. Inquiries relating to further prosecution should be directed to the Technology Center.

Sherry D. Brinkley
Petitions Examiner
Office of Petitions

UNITED STATES PATENT AND TRADEMARK OFFICE

Commissioner for Patents
United States Patent and Trademark Office
P.O. Box 1450
Alexandria, VA 22313-1450
www.uspto.gov

ECKERT SEAMANS CHERIN & MELLOTT
600 GRANT STREET
44TH FLOOR
PITTSBURGH PA 15219

COPY MAILED

JUL 30 2008

In re Application of	:	
Brown et al.	:	
Application No. 10/927,733	:	ON PETITION
Filed: August 27, 2004	:	
Attorney Docket No. 111935-00012	:	

This is a decision on the petition under 37 C.F.R. § 1.137(b), filed March 7, 2008, to revive the above-identified application. In view of the allegation in the petition of USPTO error, the petition will be considered under 37 CFR 1.181 requesting the withdrawal of the holding of abandonment in the above-identified application.

The petition under 37 C.F.R. § 1.181 is **DISMISSED**.

The above-identified application became abandoned for failure to timely file a reply to the outstanding final Office action mailed June 4, 2007. A one-month extension of time was submitted on October 1, 2007. Accordingly, the above-identified application became abandoned on October 5, 2007. A Notice of Abandonment was mailed on February 28, 2008.

In the instant petition, petitioner states, "In the Notice of Abandonment, it is indicated that the Examiner acknowledges that he is at fault for the abandonment because he told Applicants that he would withdraw the finality of the final rejection and send out a non-final office action because the after final amendment was entered and the prior art no longer read upon Applicants' invention." Further, "the Examiner states that, to satisfy Applicants' petition to revive requirements, he has written the note in the Notice of Abandonment, which note states 'that it was the fault of the Examiner and thus the PTO (and not their own) that this application went inadvertently [i.e., unintentionally] abandoned.'"

At this time, a proper reply has not been submitted in response to the final Office action. Even in view of the Examiner stating that he would withdraw the final Office action in favor of issuing a non-final Office action, it is still the Petitioner's responsibility to keep the case pending (see 35 U.S.C. 133 and 37 CFR 1.135(b)).

35 U.S.C. 133 Time for prosecuting application.

Upon failure of the applicant to prosecute the application within six months after any action therein, of which notice has been given or mailed to the applicant, or within such shorter time, not less than thirty days, as fixed by the Director in such action, the application shall be regarded as abandoned by the parties thereto, unless it be shown to the satisfaction of the Director that such delay was unavoidable.

37 CFR 1.135 (b) states:

> (b)Prosecution of an application to save it from abandonment pursuant to paragraph (a) of this section must include such complete and proper reply as the condition of the application may require. The admission of, or refusal to admit, any amendment after final rejection or any amendment not responsive to the last action, or any related proceedings, will not operate to save the application from abandonment.

Further, petitioner may not rely upon the oral representations of Office personal. See 37 CFR 1.2 below.

§ 1.2 Business to be transacted in writing.

All business with the Patent and Trademark Office should be transacted in writing. The personal attendance of applicants or their attorneys or agents at the Patent and Trademark Office is unnecessary. The action of the Patent and Trademark Office will be based exclusively on the written record in the Office. **No attention will be paid to any alleged oral promise, stipulation, or understanding in relation to which there is disagreement or doubt**.

Petitioner may wish to file a Petition under 37 CFR 1.137 with a proper response to the Office action. A proper reply to a final rejection under 37 CFR 1.113 may be: (1) an amendment, which places the application in condition for allowance; (2) a Notice of Appeal (with appeal fee); or (3) a Request for Continued Examination (RCE) in compliance with 37 CFR 1.114. Petitioner must submit one of the above documents in order to revive the above-identified application.

Further correspondence with respect to this matter should be addressed as follows:

By mail:	Mail Stop PETITIONS Commissioner for Patents Post Office Box 1450 Alexandria, VA 22313-1450
By hand:	Customer Window located at: U.S. Patent and Trademark Office Customer Service Window Randolph Building 401 Dulany Street Alexandria, VA 22314
By fax:	(571) 273-8300 ATTN: Office of Petitions

Telephone inquiries should be directed to the undersigned at (571) 272-3206.

Liana Walsh

Liana Walsh
Petitions Examiner
Office of Petitions

UNITED STATES PATENT AND TRADEMARK OFFICE

Commissioner for Patents
United States Patent and Trademark Office
P.O. Box 1450
Alexandria, VA 22313-1450
www.uspto.gov

ECKERT SEAMANS CHERIN & MELLOTT
600 GRANT STREET
44TH FLOOR
PITTSBURGH PA 15219

COPY MAILED

OCT 17 2008

OFFICE OF PETITIONS

In re Application of	:	
Brown et al.	:	
Application No. 10/927,733	:	ON PETITION
Filed: August 27, 2004	:	
Attorney Docket No. 111935-00012	:	

This is a decision on the petition under 37 C.F.R. § 1.137(b), filed September 30, 2008, to revive the above-identified application.

The petition is **GRANTED**.

The petition satisfies the requirements of 37 CFR 1.137(b) in that petitioner has supplied (1) the reply in the form of a Request for Continued Examination (RCE) and an Amendment, (2) the petition fee, and (3) a proper statement of unintentional delay.

Telephone inquiries concerning this decision should be directed to the undersigned at (571) 272-3206.

This matter is being referred to Technology Center AU 1793 for processing of the Request for Continued Examination under 37 CFR 1.114 filed with the instant petition.

Liana Walsh
Petitions Examiner
Office of Petitions

UNITED STATES PATENT AND TRADEMARK OFFICE

Commissioner for Patents
United States Patent and Trademark Office
P.O. Box 1450
Alexandria, VA 22313-1450
www.uspto.gov

CARTER J. WHITE LEGAL DEPARTMENT
M-I L.L.C.
5950 NORTH COURSE DRIVE
HOUSTON TX 77072

COPY MAILED

APR 1 0 2007

OFFICE OF PETITIONS

In re Application of	:	
Johnson, Eric K. Jr.	:	
Application No. 10/927,736	:	ON PETITION
Filed: August 27, 2004	:	
Attorney Docket No. PA02018US	:	

This is a decision on the petition under 37 C.F.R. § 1.137(b), filed February 22, 2007, to revive the above-identified application.

The petition is **GRANTED.**

The petition satisfies the conditions for revival pursuant to the provisions of 37 CFR 1.137(b) in that (1) the reply in the form of a Request for Continued Examination (RCE) and a submission under 37 CFR 1.114; (2) the petition fee; and (3) the required statement of unintentional delay have been received. Accordingly, the response has been accepted as having been unintentionally delayed.

This matter is being referred to Technology Center 3600 for processing of the Request for Continued Examination under 37 CFR 1.114 filed with the instant petition.

Telephone inquiries regarding this decision should be directed to the undersigned at (571) 272-3206.

Liana Walsh
Petitions Examiner
Office of Petitions

UNITED STATES PATENT AND TRADEMARK OFFICE

Commissioner for Patents
United States Patent and Trademark Office
P.O. Box 1450
Alexandria, VA 22313-1450
www.uspto.gov

DORSEY & WHITNEY LLP
US BANK CENTER
1420 FIFTH AVENUE
SUITE 3400
SEATTLE WA 98101-4010

COPY MAILED

AUG 1 8 2008

OFFICE OF PETITIONS

In re Application of	:	
Ik Tai YEOM et al.	:	
Application No. 10/927,741	:	DECISION ON PETITION
Filed: August 27, 2004	:	
Attorney Docket No. **34787/US/ENB (469356-12)**	:	

This is a decision on the petition under the unintentional provisions of 37 CFR 1.137(b), filed March 16, 2008, to revive the above-identified application.

The petition is **GRANTED**.

The application became abandoned for failure to reply in a timely manner to the non-final Office action mailed, March 17, 2008, which set a shortened statutory period for reply of three (3) months. No extensions of time under the provisions of 37 CFR 1.136(a) were obtained. Accordingly, the application became abandoned on June 28, 2007.

The petition satisfies the requirements of 37 CFR 1.137(b) in that petitioner has supplied (1) the reply in the form of an amendment, (2) the petition fee of $1540, and (3) a proper statement of unintentional delay. Accordingly, the reply to the non-final Office action of March 27, 2007 is accepted as having been unintentionally delayed.

Telephone inquiries concerning this decision should be directed to Tredelle Jackson at (571) 272-2783.

This application is being referred to Technology Center AU 1797 for appropriate action on the concurrently filed amendment.

Ramesh Krishnamurthy

Ramesh Krishnamurthy
Petitions Examiner
Office of Petitions

34787/US/ENB
469356-12
PN0024522.01/US

THE UNITED STATES PATENT AND TRADEMARK OFFICE

In re Application of: Ik Tai YEOM, *et al.*	Group Art Unit: 1724
Serial No.: 10/927,741	Examiner: BARRY, Chester T.
Filed: August 27, 2004	Confirmation No.: 2975
For: Activated Sludge Process And Apparatus With High Biomass Concentration Using A Downflow Sludge Blanket Filtration	Date: March 17, 2008

PETITION FOR REVIVAL OF AN APPLICATION ABANDONED UNINTENTIONALLY UNDER 37 CFR § 1.137(b)

Mail Stop Petitions
Commissioner for Patents
P.O. Box 1450
Alexandria, Virginia 22313-1450

Sir:

The referenced patent application become abandoned due to Applicant's failure to timely file a proper reply to the Office Action mailed March 27, 2007.

The entire delay in filing the required response from the due date for the response until the filing of a grantable petition pursuant to 37 C.F.R. §1.137(b) was unintentional. Accordingly, Applicants hereby petition for revival of the above-identified application for patent due to the unintentional abandonment of the application under 37 CFR § 1.137(b).

Authorization to charge our Deposit Account is attached with this submission in the amount of $1,540 to pay the fee for filing a petition to revive unintentionally abandoned application ($1,540 – Large Entity - 37 CFR §1.17(m)).

Respectfully submitted,
DORSEY & WHITNEY LLP

Edward N. Bachand
Reg. No. 37,085

Customer No.: 75149
US Bank Centre
1420 Fifth Avenue, Suite 3400
Seattle, WA 98101-4010
Telephone No.: (650) 857-1717
Facsimile No.: (650) 857-1288
4821-9864-5762\1

RAM Fee History Query

Revenue Accounting and Management

Name/Number: 10927741 Total Records Found: 3

Start Date: Any Date End Date: Any Date

Accounting Date	Sequence Num.	Fee Type	Fee Code	Fee Amount	Mailroom Date	Payment Method
03/18/2008	00005383	4	1453	$1,540.00	03/17/2008	DA 502319
03/08/2007	00000091	1	1251	$120.00	03/08/2007	CK
08/30/2004	00000129	1	1001	$770.00	08/27/2004	CK

UNITED STATES PATENT AND TRADEMARK OFFICE

Commissioner for Patents
United States Patent and Trademark Office
P.O. Box 1450
Alexandria, VA 22313-1450
www.uspto.gov

JUL - 8 2005

In re Application of	:	
Rex F. Darlington	:	DECISION ON PETITION
Application No. 10/927,764	:	
Filed: August 27, 2004	:	
For: COMPOUND ARCHERY BOW	:	

This is a decision on the petition to make special filed on January 7, 2005. The petition is submitted pursuant to the practice established in MPEP § 708.02(II) "Infringement." The $130.00 petition fee has been received.

The petition is granted.

A review of the petition shows that petitioners have satisfied all of the requirements of the above-cited MPEP section. Accordingly, the examiner will treat this application as special throughout its prosecution. Prior to the first action on the merits, the examiner will conduct a rigorous search for potentially interfering applications. The interference search will be brought up to date prior to each successive action.

The Supervisory Patent Examiner of Patent Examining Art Unit 3714 will be notified of this decision, and will inform the assigned examiner to take action not inconsistent there with this decision.

PETITION GRANTED.

Richard A. Bertsch

Richard A. Bertsch, Director
Technology Center 3700

Robert C. Collins
Reising, Ethington, Barnes, Kisselle, PC
P.O. Box 4390
Troy, MI 48099-4390

UNITED STATES PATENT AND TRADEMARK OFFICE

Commissioner for Patents
United States Patent and Trademark Office
P.O. Box 1450
Alexandria, VA 22313-1450
www.uspto.gov

ROBERT C. COLLINS
REISING, ETHINGTON, BARNES,KISSELLE,LEARMAN, ET AL
P.O. BOX 4390
TROY MI 48099

COPY MAILED

NOV 1 6 2009

OFFICE OF PETITIONS

In re Patent No. 6,990,970	:	
Issue Date: January 31, 2006	:	
Application No. 10/927,764	:	NOTICE
Filed: August 27, 2004	:	
Attorney Docket No. CPS7U	:	

This is a notice regarding your request for acceptance of a fee deficiency submission under 37 CFR 1.28. On September 1, 1998, the Court of Appeals for the Federal Circuit held that 37 CFR 1.28(c) is the sole provision governing the time for correction of the erroneous payment of the issue fee as a small entity. **See DH Technology v. Synergystex International, Inc. 154 F.3d 1333, 47 USPQ2d 1865 (Fed. Cir. Sept. 1, 1998).**

The Office no longer investigates or rejects original or reissue applications under 37 CFR 1.56. **1098 Off. Gaz. Pat. Office 502 (January 3, 1989)**. Therefore, nothing in this Notice is intended to imply that an investigation was done.

Your fee deficiency submission under 37 CFR 1.28 is hereby **ACCEPTED**.

This patent is no longer entitled to small entity status. Accordingly, all future fees paid in this patent must be paid at the large entity rate.

Liana Walsh
Petitions Examiner
Office of Petitions

UNITED STATES DEPARTMENT OF COMMERCE
Patent and Trademark Office
ASSISTANT SECRETARY OF COMMERCE AND
COMMISSIONER OF PATENTS AND TRADEMARKS
P.O. BOX 1450
Alexandria, Va 22313- 1450
www.uspto.gov.

DATE: November 30, 2009
Patent No: 7368251
Applicant: Toshio
Issued: 05/06/08

Request for consideration of Certificate of Correction:

Consideration has been given for your request for the certificate of correction for the above-identified patent under the provisions of Rules 1.322/1.323.

Respecting the alleged errors in the sequence listing are printed in accordance with the record. The Examiner stated the sequence listing filed on 08/03/04 has been rejected by STIC (CRFD). Therefore, no correction(s) are in order here under United States Codes (U.S.C.) 254 Code of Federal Regulation (C.F.R.) 1.322/1.323.

In view of the foregoing, in this matter your request is hereby denied.

RoChaun Johnson for
Mary Diggs, Supervisor
Decisions and Certificates of Correction
(571) 272-0740

BOZICEVIC, FIELD & FRANCIS LLP
1900 UNIVERSITY AVENUE SUITE 200
EAST PALO ALTO, CALIFORNIA 94303

SPE RESPONSE FOR CERTIFICATE OF CORRECTION

Paper No.: _____

DATE : 01/19/10

TO SPE OF : ART UNIT 1649

SUBJECT : Request for Certificate of Correction for Appl. No 10/927766.: 7368251

Please respond to this request for a certificate of correction within 7 days.

FOR IFW FILES:

Please review the requested changes/corrections as shown in the **COCIN** document(s) in the IFW application image. No new matter should be introduced, nor should the scope or meaning of the claims be changed.

Please complete the response (see below) and forward the completed response to scanning using document code **COCX**.

FOR PAPER FILES:

Please review the requested changes/corrections as shown in the attached certificate of correction. Please complete this form (see below) and forward it with the file to:

Certificates of Correction Branch (CofC)

Should the change(s) Be made?

RoChaun Johnson
Certificates of Correction Branch
571 272-0470

Thank You For Your Assistance

The request for issuing the above-identified correction(s) is hereby:
Note your decision on the appropriate box.

- ☐ **Approved** — **All** changes apply.
- ☐ **Approved in Part** — Specify below which changes **do not** apply.
- ☒ **Denied** — State the reasons for denial below.

Comments: Revised Sequence listing as filed on 01/05/2010 fails to comply with requirements of 37 CFR § 1.821 - 1.825 because the submission is not accompanied by a statement that the content of the paper and CRF is the same and does not include new matter.

Jeffrey Stucker — **SPE**

1649 — **Art Unit**

UNITED STATES PATENT AND TRADEMARK OFFICE

Commissioner for Patents
United States Patent and Trademark Office
P.O. Box 1450
Alexandria, VA 22313-1450
www.uspto.gov

DORSEY & WHITNEY, LLP
INTELLECTUAL PROPERTY DEPARTMENT
370 SEVENTEENTH STREET
SUITE 4700
DENVER CO 80202-5647

COPY MAILED

DEC 0 9 2004

OFFICE OF PETITIONS

In re Application of	:	
Matthew T. Jarman et al	:	
Application No. 10/927,769	:	NOTICE
Filed: August 26, 2004	:	
Attorney Docket No. 34667/US/2	:	

This is a notice regarding your request for acceptance of a fee deficiency submission under 37 CFR 1.28. On September 1, 1998, the Court of Appeals for the Federal Circuit held that 37 CFR 1.28(c) is the sole provision governing the time for correction of the erroneous payment of the issue fee as a small entity. **See DH Technology v. Synergystex International, Inc. 154 F.3d 1333, 47 USPQ2d 1865 (Fed. Cir. Sept. 1, 1998).**

The Office no longer investigates or rejects original or reissue applications under 37 CFR 1.56. **1098 Off. Gaz. Pat. Office 502 (January 3, 1989)**. Therefore, nothing in this Notice is intended to imply that an investigation was done.

Your fee deficiency submission under 37 CFR 1.28 is hereby **ACCEPTED**.

Inquiries related to this communication should be directed to Wan Laymon at (571) 272-3220.

This matter is being referred to the Office of Initial Patent Examination.

Wan Laymon

Wan Laymon
Petitions Examiner
Office of Petitions
Office of the Deputy Commissioner
for Patent Examination Policy

UNITED STATES PATENT AND TRADEMARK OFFICE

Commissioner for Patents
United States Patent and Trademark Office
P.O. Box 1450
Alexandria, VA 22313-1450
www.uspto.gov

OSHA LIANG L.L.P.
TWO HOUSTON CENTER
909 FANNIN, SUITE 3500
HOUSTON TX 77010

COPY MAILED

DEC 07 2009

OFFICE OF PETITIONS

In re Application of	:	
Pilarski et al.	:	
Application No. 10/927,774	:	DECISION ON PETITION
Filed: August 30, 2004	:	
Attorney Docket No. 17522/005001	:	

This is a decision on the petition under the unintentional provisions of 37 CFR 1.137(b), filed October 8, 2009, to revive the above-identified application.

The petition is **GRANTED**.

The application became abandoned for failure to reply in a timely manner to the non-final Office action mailed February 13, 2008, which set a shortened statutory period for reply of three (3) months. No extensions of time under the provisions of 37 CFR 1.136(a) were obtained. Accordingly, the application became abandoned on May 14, 2008. A Notice of Abandonment was mailed October 14, 2008.

The petition satisfies the requirements of 37 CFR 1.137(b) in that petitioner has supplied (1) the reply in the form of an Amendment, (2) the petition fee of $810.00, and (3) an adequate statement of unintentional delay.

It is not apparent whether the statement of unintentional delay was signed by a person who would have been in a position of knowing that the **entire** delay in filing the required reply from the due date for the reply until the filing of a grantable petition pursuant to 37 CFR 1.137(b) was unintentional. Nevertheless, in accordance with 37 CFR 10.18, the statement is accepted as constituting a certification of unintentional delay. However, in the event that petitioner has no knowledge that the delay was unintentional, petitioner must make such an inquiry to ascertain that, in fact, the delay was unintentional. If petitioner discovers that the delay was intentional, petitioner must notify the Office.

Telephone inquiries concerning this decision should be directed to the undersigned at (571) 272-7751.

This application is being referred to Technology Center AU 1623 for appropriate action by the Examiner in the normal course of business on the reply received.

Joan Olszewski
Petitions Examiner
Office of Petitions

UNITED STATES PATENT AND TRADEMARK OFFICE

Commissioner for Patents
United States Patent and Trademark Office
P.O. Box 1450
Alexandria, VA 22313-1450
www.uspto.gov
DIW Jun-05

TIMOTHY J. OYER, PH.D.
WOLF, GREENFIELD & SACKS, P.C.
600 ATLANTIC AVENUE
BOSTON MA 02210-2206

COPY MAILED

JUN 2 0 2005

OFFICE OF PETITIONS

In re Application of	:	
Bamdad and Shendelman	:	
Application No. 10/927,780	:	DECISION REFUSING STATUS
Filed: 27 August, 2004	:	UNDER 37 CFR 1.47(a)
Atty Docket No. M1015.70055US02	:	

This is a decision on the petition under 37 CFR 1.47(a), filed on 26 May, 2005.

The petition is **DISMISSED**.

Rule 47 applicant is given TWO MONTHS from the mailing date of this decision to reply, correcting the below-noted deficiencies. Any reply should be entitled "Request for Reconsideration of Petition Under 37 CFR 1.47(a)," and should only address the deficiencies noted below, except that the reply may include an oath or declaration executed by the non-signing inventor. **FAILURE TO RESPOND WILL RESULT IN ABANDONMENT OF THE APPLICATION.** Extensions of time may be obtained in accordance with 37 CFR 1.136(a).

The above-identified application was filed on 27 August, 2004, without an executed oath or declaration. Accordingly, on 25 October, 2004, Initial Patent Examination Division mailed a Notice to File Missing Parts of Nonprovisional Application, requiring the statutory basic filing fee, an executed oath or declaration, additional claim fees, and a surcharge for their late filing. A two (2) month period for reply was set.

In response, on 26 May, 2005 (certificate of mailing date 24 May, 2005), a petition under 37 CFR 1.47(a), the present petition, authorization to charge any required fees and the late filing surcharge were filed. A five (5) month extension of time was also filed, along with a declaration naming Cynthia C. Bamdad and Shoshana Bamded Shendelman as joint inventors and signed by joint

inventor Bamdad on behalf of herself and non-signing joint inventor Shendelman.

Petitioners assert that the declaration was sent to joint inventor Shendelman's last known address, but she refused to sign and return it.

A grantable petition under 37 CFR 1.47(a) requires:

(1) proof that the non-signing inventor cannot be reached or located, notwithstanding diligent effort, or refuses to sign the oath or declaration after having been presented with the application papers (specification, claims and drawings);

(2) an acceptable oath or declaration in compliance with 35 U.S.C. §§ 115 and 116;

(3) the petition fee;

(4) a surcharge of $130 or $65 (small entity) if the petition and/or declaration is not filed at the time of filing the application, and

(5) a statement of the last known address of the non-signing inventor.

The petition lacks item (1).

In regards to item (1), petitioners have not shown that joint inventor Erickson was sent or presented with a copy of the application as filed (specification, including claims, drawings, if any, and the declaration).[1]

Petitioners may show proof that a copy of the application was sent or given to the non-signing inventor for review by providing a copy of the cover letter transmitting the application papers (specification, including claims, drawings, if any, and the declaration) to the non-signing inventor or details given in an affidavit or declaration of facts by a person having first-hand knowledge of the details.

Likewise, before a *bona fide* refusal to sign the declaration can be alleged, petitioners must show that a copy of the application was sent or given to the inventor. If the inventor refuses in writing, petitioners must submit a copy of that written refusal with any renewed petition. If the refusal was made orally to a person, then that person must provide details of the refusal in an affidavit or declaration of fact.

---

[1] MPEP 409.03(d).

Further correspondence with respect to this matter should be addressed as follows:

By mail: Mail Stop Petition
Commissioner for Patents
P.O. Box 1450
Alexandria, VA 22313-1450

By FAX: (703) 872-9306
Attn: Office of Petitions

By hand: Customer Service Window
Mail Stop Petition
Randolph Building
401 Dulany Street
Alexandria, VA 22314

Telephone inquiries related to this decision should be directed to the undersigned at 571-272-3231.

Douglas I. Wood
Senior Petitions Attorney
Office of Petitions

UNITED STATES PATENT AND TRADEMARK OFFICE

Commissioner for Patents
United States Patent and Trademark Office
P.O. Box 1450
Alexandria, VA 22313-1450
www.uspto.gov
DIW Jan-06

JHK LAW
P.O. BOX 1078
LA CANADA, CA 91012-1078

COPY MAILED

JAN 27 2006

OFFICE OF PETITIONS

In re Application of	:	
Bamdad and Shendelman	:	
Application No. 10/927,780	:	DECISION ACCORDING STATUS
Filed: 27 August, 2004	:	UNDER 37 CFR 1.47(a)
Atty Docket No. M1015.70055US02	:	

This is a decision on the renewed petition under 37 CFR 1.47(a), filed on 20 December, 2005.

The petition is **GRANTED**.

Petitioners have shown that the non-signing inventor, Shoshana Bamdad Shendelman, has refused to review the sign the declaration after having been sent a copy of the application via her counsel. Specifically, petitioners have shown that a copy of the application was sent to Shendelman's attorney, Robert DiLibero, but that the non-signing inventor has failed to sign and return the declaration naming her as a joint inventor along with Cynthia C. Bamdad.

The above-identified application and papers have been reviewed and found in compliance with 37 CFR 1.47(a). This application is hereby accorded Rule 1.47(a) status.

As provided in Rule 1.47(c), this Office will forward notice of this application's filing to the non-signing inventor at the address given in the Declaration. Notice of the filing of this application will also be published in the *Official Gazette*.

The revocation and power of attorney filed on 20 December, 2005, has been accepted. All correspondence will be mailed to the address located therein.

The application is being referred to Technology Center Art Unit 1641 for examination in due course.

Telephone inquiries related to this decision should be directed to the undersigned at 571-272-3231.

D Wood

Douglas I. Wood
Senior Petitions Attorney
Office of Petitions

Encl: Notice Regarding Change of Power of Attorney
Notice of Acceptance of Power of Attorney

UNITED STATES PATENT AND TRADEMARK OFFICE

Commissioner for Patents
United States Patent and Trademark Office
P.O. Box 1450
Alexandria, VA 22313-1450
www.uspto.gov
DIW Jan-06

Shoshana Bamdad Shendelman
275 West 96th Street, Apt. 18F
New York NY 100251

COPY MAILED

JAN 27 2006

OFFICE OF PETITIONS

In re Application of
Bamdad et al.
Application No. 10/927,780
Filed: 27 August, 2004
For: TANDEM SIGNALING ASSAY

Dear Ms. Shendelman:

You are named as a joint inventor in the above identified United States patent application, filed under the provisions of 35 U.S.C. 116 (United States Code), and 37 CFR 1.47(a), Rules of Practice in Patent Cases. Should a patent be granted on the application you will be designated therein as a joint inventor.

As a named inventor you are entitled to inspect any paper in the file wrapper of the application, order copies of all or any part thereof (at a prepaid cost per 37 CFR 1.19) or make your position of record in the application. Alternatively, you may arrange to do any of the preceding through a registered patent attorney or agent presenting written authorization from you. If you care to join the application, counsel of record (see below) would presumably assist you. Joining in the application would entail the filing of an appropriate oath or declaration by you pursuant to 37 CFR 1.63.

Telephone inquiries regarding this communication should be directed to the undersigned at 571/272-3231. Requests for information regarding your application should be directed to the File Information Unit at 703/308-2733. Information regarding how to pay for and order a copy of the application, or a specific paper in the application, should be directed to Certification Division at 571/272-3150 or 1-800-972-6382 (outside the Washington D.C. area).

D Wood

Douglas I. Wood
Senior Petitions Attorney
Office of Petitions

JHK LAW
P.O. BOX 1078
LA CANADA CA 91012-1078

UNITED STATES PATENT AND TRADEMARK OFFICE

Commissioner for Patents
United States Patent and Trademark Office
P.O. Box 1450
Alexandria, VA 22313-1450
www.uspto.gov

JHK LAW
P.O. BOX 1078
LA CANADA CA 91012-1078

COPY MAILED

APR 1 7 2008

OFFICE OF PETITIONS

In re Application of :
Cynthia C. **Bamdad** et al. :
Application No. 10/927,780 : DECISION ON PETITION
Filed: August 27, 2004 :
Attorney Docket No.
M1015.70055US02

This is a decision on the petition under the unintentional provisions of 37 CFR 1.137(b), filed December 27, 2007, to revive the above-identified application.

The petition is **GRANTED**.

This application became abandoned for failure to file an Appeal brief within the statutory period for reply of two (2) months after the Notice of Appeal of November 06, 2006. No extension of time under the provisions of 37 CFR 1.136(a) for filing the Appeal Brief was obtained. Accordingly, the above-identified application became abandoned on January 07, 2007.

The petition satisfies the requirements of 37 CFR 1.137(b) in that petitioner has supplied (1) the reply in the form of an amendment, Request for Continued Examination (RCE), and the $405.00 filing fee; (2) the petition fee of $770.00, and (3) a proper statement of unintentional delay. Accordingly, the reply to the final Office Action of January 07, 2007 is accepted as having been unintentionally delayed.

An extension of time under 37 CFR 1.136 must be filed prior to the expiration of the maximum extendable period for reply. *See* In re Application of S., 8 USPQ2d 1630, 1631 (Comm'r Pats. 1988). Since $820.00 extension of time fee submitted with the petition on December 27, 2007 was subsequent to the maximum extendable period for reply, this fee is unnecessary and will be credited to petitioner's deposit account number 50-2486.

Telephone inquiries concerning this decision should be directed to Thuy Pardo at (571) 272-6052 or in her absence, the undersigned at (571)272-7099.

This application is being referred to Technology Center AU 1641 for appropriate action by the Examiner in the normal course of business on the reply received

for David A. Bucci
Petitions Examiner
Office of Petitions

UNITED STATES PATENT AND TRADEMARK OFFICE

UNITED STATES DEPARTMENT OF COMMERCE
United States Patent and Trademark Office
Address: COMMISSIONER FOR PATENTS
P.O. Box 1450
Alexandria, Virginia 22313-1450
www.uspto.gov

APPL NO.	FILING OR 371 (c) DATE	ART UNIT	FIL FEE REC'D	ATTY.DOCKET NO	DRAWINGS	TOT CLMS	IND CLMS
10/927,781	08/27/2004	2614	0.00	08228/045001	13	10	2

CONFIRMATION NO. 2804

CORRECTED FILING RECEIPT

OC000000015655347

Jonathan P. Osha
Osha & May L.L.P.
Suite 2800
1221 McKinney St.
Houston, TX 77010

Date Mailed: 04/05/2005

Receipt is acknowledged of this regular Patent Application. It will be considered in its order and you will be notified as to the results of the examination. Be sure to provide the U.S. APPLICATION NUMBER, FILING DATE, NAME OF APPLICANT, and TITLE OF INVENTION when inquiring about this application. Fees transmitted by check or draft are subject to collection. Please verify the accuracy of the data presented on this receipt. **If an error is noted on this Filing Receipt, please mail to the Commissioner for Patents P.O. Box 1450 Alexandria Va 22313-1450. Please provide a copy of this Filing Receipt with the changes noted thereon. If you received a "Notice to File Missing Parts" for this application, please submit any corrections to this Filing Receipt with your reply to the Notice. When the USPTO processes the reply to the Notice, the USPTO will generate another Filing Receipt incorporating the requested corrections (if appropriate).**

Applicant(s)

Junichi Kawada, Gunma-ken, JAPAN;

Power of Attorney: None

Domestic Priority data as claimed by applicant

Foreign Applications

JAPAN 2003-303532 08/27/2003

If Required, Foreign Filing License Granted: 03/09/2005

The country code and number of your priority application, to be used for filing abroad under the Paris Convention, is US10/927,781

Projected Publication Date: To Be Determined - pending completion of Missing Parts

Non-Publication Request: No

Early Publication Request: No

Title

BEST AVAILABLE COPY

Video signal processor and video display device

Preliminary Class

348

LICENSE FOR FOREIGN FILING UNDER
Title 35, United States Code, Section 184
Title 37, Code of Federal Regulations, 5.11 & 5.15

GRANTED

The applicant has been granted a license under 35 U.S.C. 184, if the phrase "IF REQUIRED, FOREIGN FILING LICENSE GRANTED" followed by a date appears on this form. Such licenses are issued in all applications where the conditions for issuance of a license have been met, regardless of whether or not a license may be required as set forth in 37 CFR 5.15. The scope and limitations of this license are set forth in 37 CFR 5.15(a) unless an earlier license has been issued under 37 CFR 5.15(b). The license is subject to revocation upon written notification. The date indicated is the effective date of the license, unless an earlier license of similar scope has been granted under 37 CFR 5.13 or 5.14.

This license is to be retained by the licensee and may be used at any time on or after the effective date thereof unless it is revoked. This license is automatically transferred to any related applications(s) filed under 37 CFR 1.53(d). This license is not retroactive.

The grant of a license does not in any way lessen the responsibility of a licensee for the security of the subject matter as imposed by any Government contract or the provisions of existing laws relating to espionage and the national security or the export of technical data. Licensees should apprise themselves of current regulations especially with respect to certain countries, of other agencies, particularly the Office of Defense Trade Controls, Department of State (with respect to Arms, Munitions and Implements of War (22 CFR 121-128)); the Office of Export Administration, Department of Commerce (15 CFR 370.10 (j)); the Office of Foreign Assets Control, Department of Treasury (31 CFR Parts 500+) and the Department of Energy.

NOT GRANTED

No license under 35 U.S.C. 184 has been granted at this time, if the phrase "IF REQUIRED, FOREIGN FILING LICENSE GRANTED" DOES NOT appear on this form. Applicant may still petition for a license under 37 CFR 5.12, if a license is desired before the expiration of 6 months from the filing date of the application. If 6 months has lapsed from the filing date of this application and the licensee has not received any indication of a secrecy order under 35 U.S.C. 181, the licensee may foreign file the application pursuant to 37 CFR 5.15(b).

UNITED STATES PATENT AND TRADEMARK OFFICE

Commissioner for Patents
United States Patent and Trademark Office
P.O. Box 1450
Alexandria, VA 22313-1450
www.uspto.gov
DIW May-05

FULBRIGHT & JAWORSKI L.L.P.
600 CONGRESS AVE.
SUITE 2400
AUSTIN TX 78701

COPY MAILED

MAY 0 3 2005

OFFICE OF PETITIONS

In re Application of	:	
McNeish, Popp, Brown, Leiby,	:	DECISION REFUSING STATUS
Cerul, and Berger	:	UNDER 37 CFR 1.47(a)
Application No. 10/927,782	:	
Filed: 27 August, 2004	:	
Atty Docket No. BAES:035USC1	:	

This is in response to the petition under 37 CFR 1.47(a) filed on 4 April, 2005.

The petition is **DISMISSED**.

Rule 47 applicant is given TWO MONTHS from the mailing date of this decision to reply, correcting the below-noted deficiencies. Any reply should be entitled "Request for Reconsideration of Petition Under 37 CFR 1.47(a)," and should only address the deficiencies noted below, except that the reply may include an oath or declaration executed by the non-signing inventor. **FAILURE TO RESPOND WILL RESULT IN ABANDONMENT OF THE APPLICATION.** Extensions of time may be obtained in accordance with 37 CFR 1.136(a).

The above-identified application was filed on 27 August, 2004, without an executed oath or declaration. Accordingly, on 1 November, 2004, Initial Patent Examination Division mailed a Notice to File Missing Parts of Nonprovisional Application, requiring an executed oath or declaration, the statutory basic filing fee, additional claim fee(s) and a surcharge for their late filing. A two (2) month period for reply was set.

In response, on 4 April, 2005 (certificate of mailing date 1 April, 2005), a petition under 37 CFR 1.47(a), and a three (3) month extension of time and fee were filed. The statutory basic

filing fee and additional claim fees were also submitted, along with a declaration naming Allister McNeish, Edmund Popp, Mark Brown, Mark W. Leiby, James J. Cerul, and Harvey L. Berger as joint inventors and signed by joint inventors McNeish, Popp, and Brown on behalf of themselves and joint inventors Leiby, Cerul, and Berger.

Petitioners assert that a copy of the application was sent to counsel for Sono-Tek Corporation, the assignee of prior application No. 10/084,293, of which the present application is a continuation.

A grantable petition under 37 CFR 1.47(a) requires:

(1) proof that the non-signing inventor cannot be reached or located, notwithstanding diligent effort, or refuses to sign the oath or declaration after having been presented with the application papers (specification, claims and drawings);

(2) an acceptable oath or declaration in compliance with 35 U.S.C. §§ 115 and 116;

(3) the petition fee;

(4) a surcharge of $130 or $65 (small entity) if the petition and/or declaration is not filed at the time of filing the application, and

(5) a statement of the last known address of the non-signing inventors.

The petition lacks item (1).

In regards to item (1), petitioners have not shown that the non-signing inventors were sent or presented with a copy of the application as filed (specification, including claims, drawings, if any, and the declaration).[1] It is noted that while an assignment from the non-signing inventors to Sono-Tek Corporation has been recorded in the prior-filed application, there is no showing that the non-signing inventors appointed any representative of Sono-Tek as their attorney in reference to the present application. In any event, a showing must be provided that a copy of the application (specification, including the claims, drawings, if any, and the declaration) was provided to each of the non-signing inventors or his attorney, asking that the inventor review the application papers and sign and return the declaration.

---

[1] MPEP 409.03(d).

Petitioners may show proof that a copy of the application was sent or given to the non-signing inventor for review by providing a copy of the cover letter transmitting the application papers (specification, including claims, drawings, if any, and the declaration) to the non-signing inventor or details given in an affidavit or declaration of facts by a person having first-hand knowledge of the details.

Likewise, before a *bona fide* refusal to sign the declaration can be alleged, petitioners must show that a copy of the application was sent or given to the inventor. If the inventor refuses in writing, petitioners must submit a copy of that written refusal with any renewed petition. If the refusal was made orally to a person, then that person must provide details of the refusal in an affidavit or declaration of fact.

Further correspondence with respect to this matter should be addressed as follows:

By mail: Mail Stop Petition
Commissioner for Patents
P.O. Box 1450
Alexandria, VA 22313-1450

By FAX: (703) 872-9306
Attn: Office of Petitions

By hand: Customer Service Window
Mail Stop Petition
Randolph Building
401 Dulany Street
Alexandria, VA 22314

Telephone inquiries related to this decision should be directed to the undersigned at 571-272-3231.

D Wood

Douglas I. Wood
Senior Petitions Attorney
Office of Petitions

UNITED STATES PATENT AND TRADEMARK OFFICE

Commissioner for Patents
United States Patent and Trademark Office
P.O. Box 1450
Alexandria, VA 22313-1450
www.uspto.gov
DIW Aug-05

FULBRIGHT & JAWORSKI L.L.P.
600 CONGRESS AVE.
SUITE 2400
AUSTIN TX 78701

COPY MAILED

AUG 2 4 2005

OFFICE OF PETITIONS

In re Application of	:
McNeish, Popp, Brown, Leiby,	: DECISION ACCORDING STATUS
Cerul, and Berger	: UNDER 37 CFR 1.47(a)
Application No. 10/927,782	:
Filed: 27 August, 2004	:
Atty Docket No. BAES:035USC1	:

This is in response to the renewed petition under 37 CFR 1.47(a) filed on 5 August, 2005 (certificate of mailing date 3 August, 2005).

The petition is **GRANTED**.

Petitioners have shown that the non-signing inventors, Mark W. Leiby, James J. Cerul, and Harvey L. Berger, have refused to review the sign the declaration after having been sent a copy of the application via their counsel. Specifically, petitioners have shown, via the statement of registered patent attorney Mark T. Garrett, that a copy of the application papers were sent to counsel for the the non-signing inventors, but that the non-signing inventors' attorney told him during a telephone call that the inventors would not be signing and returning the declaration naming them as joint inventors along with Allister McNeish, Edmund Popp, and Mark Brown.

The above-identified application and papers have been reviewed and found in compliance with 37 CFR 1.47(a). This application is hereby accorded Rule 1.47(a) status.

As provided in Rule 1.47(c), this Office will forward notice of this application's filing to the non-signing inventor at the address given in the Declaration. Notice of the filing of this application will also be published in the *Official Gazette*.

The application is being referred to Technology Center Art Unit 1762 for examination in due course.

Telephone inquiries related to this decision should be directed to the undersigned at 571-272-3231.

D Wood

Douglas I. Wood
Senior Petitions Attorney
Office of Petitions

UNITED STATES PATENT AND TRADEMARK OFFICE

Commissioner for Patents
United States Patent and Trademark Office
P.O. Box 1450
Alexandria, VA 22313-1450
www.uspto.gov
DIW Aug-05

James J. Cerul
45 Birch Street, Apt. 5E
Kingston NY 12401

COPY MAILED

AUG 2 4 2005

OFFICE OF PETITIONS

In re Application of
McNeish et al.
Application No. 10/927,782
Filed: 27 August, 2004
For: PROCESS FOR COATING THREE-DIMENSIONAL SUBSTRATES WITH THIN ORGANIC FILMS AND PRODUCTS

Dear Mr. Cerul:

You are named as a joint inventor in the above identified United States patent application, filed under the provisions of 35 U.S.C. 116 (United States Code), and 37 CFR 1.47(a), Rules of Practice in Patent Cases. Should a patent be granted on the application you will be designated therein as a joint inventor.

As a named inventor you are entitled to inspect any paper in the file wrapper of the application, order copies of all or any part thereof (at a prepaid cost per 37 CFR 1.19) or make your position of record in the application. Alternatively, you may arrange to do any of the preceding through a registered patent attorney or agent presenting written authorization from you. If you care to join the application, counsel of record (see below) would presumably assist you. Joining in the application would entail the filing of an appropriate oath or declaration by you pursuant to 37 CFR 1.63.

Telephone inquiries regarding this communication should be directed to the undersigned at 571/272-3231. Requests for information regarding your application should be directed to the File Information Unit at 703/308-2733. Information regarding how to pay for and order a copy of the application, or a specific paper in the application, should be directed to Certification Division at 703/308-9726 or 1-800-972-6382 (outside the Washington D.C. area).

Douglas I. Wood
Senior Petitions Attorney
Office of Petitions

FULBRIGHT AND JAWORSKI
600 CONGRESS AVENUE
SUITE 2400
AUSTIN TX 78701

UNITED STATES PATENT AND TRADEMARK OFFICE

Commissioner for Patents
United States Patent and Trademark Office
P.O. Box 1450
Alexandria, VA 22313-1450
www.uspto.gov
DIW Aug-05

Mark W. Leiby
235 Crum Elbow Road
Hyde Park, NY 12538

COPY MAILED

AUG 24 2005

OFFICE OF PETITIONS

In re Application of
McNeish et al.
Application No. 10/927,782
Filed: 27 August, 2004
For: PROCESS FOR COATING THREE-DIMENSIONAL SUBSTRATES WITH THIN ORGANIC FILMS AND PRODUCTS

Dear Mr. Leiby:

You are named as a joint inventor in the above identified United States patent application, filed under the provisions of 35 U.S.C. 116 (United States Code), and 37 CFR 1.47(a), Rules of Practice in Patent Cases. Should a patent be granted on the application you will be designated therein as a joint inventor.

As a named inventor you are entitled to inspect any paper in the file wrapper of the application, order copies of all or any part thereof (at a prepaid cost per 37 CFR 1.19) or make your position of record in the application. Alternatively, you may arrange to do any of the preceding through a registered patent attorney or agent presenting written authorization from you. If you care to join the application, counsel of record (see below) would presumably assist you. Joining in the application would entail the filing of an appropriate oath or declaration by you pursuant to 37 CFR 1.63.

Telephone inquiries regarding this communication should be directed to the undersigned at 571/272-3231. Requests for information regarding your application should be directed to the File Information Unit at 703/308-2733. Information regarding how to pay for and order a copy of the application, or a specific paper in the application, should be directed to Certification Division at 703/308-9726 or 1-800-972-6382 (outside the Washington D.C. area).

D Wood

Douglas I. Wood
Senior Petitions Attorney
Office of Petitions

FULBRIGHT AND JAWORSKI
600 CONGRESS AVENUE
SUITE 2400
AUSTIN TX 78701

UNITED STATES PATENT AND TRADEMARK OFFICE

Commissioner for Patents
United States Patent and Trademark Office
P.O. Box 1450
Alexandria, VA 22313-1450
www.uspto.gov
DIW Aug-05

Harvey L. Berger
Partridge Hill Road
Hyde Park NY 12538

COPY MAILED

AUG 2 4 2005

OFFICE OF PETITIONS

In re Application of
McNeish et al.
Application No. 10/927,782
Filed: 27 August, 2004
For: PROCESS FOR COATING THREE-DIMENSIONAL SUBSTRATES WITH THIN ORGANIC FILMS AND PRODUCTS

Dear Mr. Berger:

You are named as a joint inventor in the above identified United States patent application, filed under the provisions of 35 U.S.C. 116 (United States Code), and 37 CFR 1.47(a), Rules of Practice in Patent Cases. Should a patent be granted on the application you will be designated therein as a joint inventor.

As a named inventor you are entitled to inspect any paper in the file wrapper of the application, order copies of all or any part thereof (at a prepaid cost per 37 CFR 1.19) or make your position of record in the application. Alternatively, you may arrange to do any of the preceding through a registered patent attorney or agent presenting written authorization from you. If you care to join the application, counsel of record (see below) would presumably assist you. Joining in the application would entail the filing of an appropriate oath or declaration by you pursuant to 37 CFR 1.63.

Telephone inquiries regarding this communication should be directed to the undersigned at 571/272-3231. Requests for information regarding your application should be directed to the File Information Unit at 703/308-2733. Information regarding how to pay for and order a copy of the application, or a specific paper in the application, should be directed to Certification Division at 703/308-9726 or 1-800-972-6382 (outside the Washington D.C. area).

Douglas I. Wood
Senior Petitions Attorney
Office of Petitions

FULBRIGHT AND JAWORSKI
600 CONGRESS AVENUE
SUITE 2400
AUSTIN TX 78701

UNITED STATES PATENT AND TRADEMARK OFFICE

Commissioner for Patents
United States Patent and Trademark Office
P.O. Box 1450
Alexandria, VA 22313-1450
www.uspto.gov

Stolowitz Ford Cowger LLP
621 SW Morrison St
Suite 600
Portland, OR 97205

COPY MAILED
AUG 15 2008

In re Application of Seigneurbieux :
Application No. 10/927,801 : Decision on Petition
Filing Date: August 26, 2004 :
Attorney Docket No. 8559-0005 :

This is a decision on the petition under 37 CFR 1.137(b), filed May 19, 2008, to revive the above-identified application.

The petition is **granted**.

The Office mailed a Notice of Allowance and Notice of Allowability on September 20, 2007. The Notice of Allowance required the submission of the issue fee. The Notice of Allowability required the submission of a substitute oath or declaration. The Notices set forth a three-month time period for reply.

The Office did not receive a reply to the September 20, 2007 Notices. As a result, the application became abandoned December 21, 2007. A Notice of Abandonment was mailed January 16, 2008.

The instant petition requests revival of the application.

A grantable petition under 37 CFR 1.137(b) must be accompanied by:

(1) the reply required to the outstanding Office action or notice, unless previously filed,
(2) the petition fee,
(3) a statement that the entire delay in filing the required reply from the due date for the reply until the filing of a grantable petition pursuant to 37 CFR 1.137(b) was unintentional, and
(4) a terminal disclaimer and fee if the application was filed on or before June 8, 1995 or if the application is a design application.

As to item (1), petitioner has submitted a reply to the Notice of Allowance in the form of the issue fee.

Petitioner has not supplied a reply to the Notice of Allowability. The Notice of Allowability stated a substitute oath or declaration is necessary. The Notice indicated the attached examiner's amendment included the reason a substitute oath or declaration was filed. The examiner's amendment does not include any reference to a need for a substitute oath or declaration. On August 13, 2008, in response to an inquiry from the undersigned, the current examiner of record indicated a substitute oath or declaration is not necessary and the box on the Notice of Allowability was inadvertently checked. Therefore, the petition may be granted despite the absence of a substitute oath or declaration.

As to item (3) on the prior page, the petition is signed by Attorney Graciela Cowger. Attorney Cowger was not an attorney or agent of record at the time the application became abandoned. Therefore, it appears Attorney Cowger may not have been in a position to have firsthand or direct knowledge of the facts and circumstances of the delay. Nevertheless, the statement by Attorney Cowger that the entire delay was unintentional is being treated as having been made as the result of a reasonable inquiry into the facts and circumstances of such delay.[1] In the event that such an inquiry has not been made, petitioner must make such an inquiry. If such inquiry results in the discovery that a portion of the delay from the due date for the reply until the filing of a grantable petition pursuant to 37 CFR 1.137(b) was unintentional, petitioner must notify the Office.

A review of the record indicates petitioner has met the requirements to revive the above-identified application pursuant to 37 CFR 1.137(b). The petition is granted and the application is revived.

The Office of Data Management, Patent Publication Branch, will be informed of the instant decision and will issue the application as a patent in due course.

Telephone inquiries regarding this communication should be directed to Petitions Attorney Steven Brantley at (571) 272-3203.

Charles Steven Brantley
Senior Petitions Attorney
Office of Petitions

[1] See Changes to Patent Practice and Procedure, 62 *Fed. Reg.* at 53160 and 53178; 1203 *Off. Gaz. Pat. Office* at 88 and 103 (responses to comments 64 and 109) (applicant obligated under 37 CFR 10.18 to inquire into the underlying facts and circumstances when providing the statement required by 37 CFR 1.137(b) to the Patent and Trademark Office).

UNITED STATES PATENT AND TRADEMARK OFFICE

Commissioner for Patents
United States Patent and Trademark Office
P.O. Box 1450
Alexandria, VA 22313-1450
www.uspto.gov

Paper No.

Charles G. Call
215 WEST HURON ST.
UNIT 2
CHICAGO IL 60610-3331

COPY MAILED

APR 28 2008

OFFICE OF PETITIONS

In re Application of :
Yael Maguire :
Application No. 10/927,808 :
Filed: August 27, 2004 :
Attorney Docket No. E-27 :

DECISION ON PETITION

This is a decision on the PETITION FOR REVIVAL OF AN APPLICATION FOR PATENT ABANDONED UNINTENTIONALLY UNDER 37 CFR 1.137(b) filed March 13, 2008.

The petition is **GRANTED**.

The above-identified application became abandoned for failure to file a reply to the non-final Office action mailed June 28, 2006. This Office action set a shortened statutory period for reply of three (3) months, with extensions of time obtainable under § 1.136(a). No reply timely filed and no extension of time obtained, the application became abandoned effective September 29, 2006. A courtesy Notice of Abandonment was mailed on January 13, 2007.

The petition includes the required reply, the required statement of unintentional delay and payment of the petition fee set forth in 37 CFR § 1.17(m). No terminal disclaimer is required.

Technology Center AU 2859 has been advised of this decision. The application is, thereby, forwarded to the examiner for consideration of the amendment submitted on petition filed March 13, 2008.

Telephone inquiries specific to this decision should be directed to the undersigned at (571) 272-3219.

Nancy Johnson
Senior Petitions Attorney
Office of Petitions

UNITED STATES PATENT AND TRADEMARK OFFICE

Commissioner for Patents
United States Patent and Trademark Office
P.O. Box 1450
Alexandria, VA 22313-1450
www.uspto.gov

Paper No.

Charles G. Call
215 WEST HURON ST.
UNIT 2
CHICAGO IL 60610-3331

COPY MAILED

JAN 13 2009

OFFICE OF PETITIONS

In re Application of	:	
Yael Maguire	:	ON PETITION
Application No. 10/927,808	:	
Filed: August 27, 2004	:	
Attorney Docket No. E-27	:	

This is in response to the signed copy of PETITION FOR REVIVAL OF AN APPLICATION FOR PATENT ABANDONED UNINTENTIONALLY UNDER 37 CFR 1.137(b) filed March 13, 2008, resubmitted on January 8, 2009.

The petition is **GRANTED**.

The above-identified application became abandoned effective September 29, 2006 for failure to file a reply to the non-final Office action mailed June 28, 2006. A courtesy Notice of Abandonment was mailed on January 13, 2007. By decision mailed April 28, 2008, the petition to revive under 37 CFR 1.137(b) filed March 13, 2008 was granted.

However, upon subsequent review of the petition, it was discovered that the petition filed March 13, 2008 was not signed. (The transmittal and the accompanying amendment were signed). The undersigned then telephoned the attorney of record and requested submission of a signed copy of the petition. Pursuant to that request, a signed copy of the petition originally filed on March 13, 2008 was promptly filed on January 8, 2009.

This decision ratifies the decision of April 28, 2008, granting the petition to revive. Applicants have met all requirements for revival of this application.

A Notice of Allowance was mailed in this application on November 26, 2008. The Office of Data Management has been advised of this decision. The application is, thereby, forwarded to the Office of Data Management to await applicants' response to the Notice of Allowance and Notice of Allowability.

Telephone inquiries specific to this decision should be directed to the undersigned at (571) 272-3219.

Nancy Johnson
Senior Petitions Attorney
Office of Petitions

UNITED STATES PATENT AND TRADEMARK OFFICE

Commissioner for Patents
United States Patent and Trademark Office
P.O. Box 1450
Alexandria, VA 22313-1450
www.uspto.gov

CHARLES G CALL
20 EAST GOETH ST CH1
CHICAGO IL 60610

COPY MAILED

MAY 26 2009

OFFICE OF PETITIONS

In re Application of	:	
Maguire, et al.	:	
Application No. 10/927,808	:	DECISION ON
Filed: August 27, 2004	:	PETITION
Attorney Docket No. E-27	:	

This is in response to the petition to revive under 37 CFR 1.137(b), filed April 24, 2009.

The petition under 37 CFR 1.137(b) is **GRANTED**.

The above application became abandoned for failure to timely reply to the Notice of Drawing Inconsistency with Specification, mailed December 29, 2008. This Notice set a non-extendable period for reply of one month. No reply having been received, the application became abandoned on January 30, 2009. The Office mailed a Notice of Abandonment on March 26, 2009.

With the instant petition, applicants paid the petition fee, submitted the required reply in the form of an amendment to the specification, and made the proper statement of unintentional delay.

Receipt of the issue and publication fee, submitted in response to the Notice of Allowance mailed November 26, 2008, is acknowledged.

The matter is being forwarded to the Office of Data Management for processing into a patent.

Telephone inquiries related to this decision should be directed to the undersigned at 571-272-3207.

Cliff Congo
Petitions Attorney
Office of Petitions

UNITED STATES PATENT AND TRADEMARK OFFICE

Commissioner for Patents
United States Patent and Trademark Office
P.O. Box 1450
Alexandria, VA 22313-1450
www.uspto.gov

KENYON & KENYON LLP
ONE BROADWAY
NEW YORK NY 10004

COPY MAILED
FEB 26 2010

In re Application of	:	
Endo et al.	:	
Application No. 10/927819	:	DECISION
Filing or 371(c) Date: 08/27/2004	:	ON PETITION
Patent No.: 7526368	:	
Issue Date: 04/28/2009	:	
Attorney Docket Number: 00476/129	:	

This is a decision on the Petition Inder 37 CFR 1.182, filed May 29, 2009, to correct the name of the assignee on the front page of the above-identified patent, and to correct an additional errors, by way of a Certificate of Correction. The delay in treating this petition is regretted.

The Petition is **granted to the extent indicated herein**.

The petition was accompanied by a certificate of correction as required by 3.81(b), and the certificate of correction and processing fee. Further, Office assignment records reflect that TOYOTA JIDOSHA KABUSHIKI KAISHA, and AISIN SEKI KABUSHIKI KAISHA, are the assignees of record. As the request complies with the provisions of 37 CFR 3.81(b), it would be appropriate for a certificate of correction to correct the name of the assignee on the front page of the above-identified patent, to be processed.

Telephone inquiries concerning this matter should be directed to the undersigned at (571) 272-3232. Any questions concerning the issuance of the Certificate of Correction should be directed to the Certificate of Correction Branch at (571) 272-4200.

This matter is being referred to the Certificates of Correction Branch for correction of the name of the assignee(s) and for consideration of the additional errors that were included on the Certificate of Correction filed with the present petition on May 29, 2009.

/Derek L. Woods/
Derek L. Woods
Attorney
Office of Petitions

UNITED STATES PATENT AND TRADEMARK OFFICE

UNITED STATES DEPARTMENT OF COMMERCE
United States Patent and Trademark Office
Address: COMMISSIONER FOR PATENTS
P.O. Box 1450
Alexandria, Virginia 22313-1450
www.uspto.gov

KLARQUIST SPARKMAN, LLP
121 SW SALMON STREET
SUITE 1600
PORTLAND, OR 97204

Mail Date: 04/21/2010

Applicant	: Bill Pack	: DECISION ON REQUEST FOR
Patent Number	: 7628106	: RECALCULATION of PATENT
Issue Date	: 12/08/2009	: TERM ADJUSTMENT IN VIEW
Appliction No	: 10/927,832	: OF WYETH AND NOTICE OF INTENT TO
Filed	: 08/27/2004	: ISSUE CERTIFICATE OF CORRECTION
		:

The Request for Recalculation is **GRANTED** to the extent indicated.

The patent term adjustment has been determined to be **1503** days. The USPTO will *sua sponte* issue a certificate of correction reflecting the amount of PTA days determined by the recalculation.

Prior to the issuance of the certificate of correction, the USPTO will afford patentee an opportunity to be heard and request reconsideration. Accordingly, patentee has **one month or thirty (30) days**, whichever is longer, to file a request for reconsideration of this patent term adjustment calculation. See 35 U.S.C. 154(b)(3)(B)(ii) and 37 CFR 1.322(a)(4). No extensions of time will be granted under 37 CFR 1.136.

Patentee should use document code PET.OP if electronically filing a request for reconsideration of this patent term adjustment calculation. The patentee must also include the information required by 37 CFR 1.705(b)(2) and the fee required by 37 CFR 1.18(e). If patentee does not file a timely request for reconsideration of this patent term adjustment calculation including the information required by 37 CFR 1.705(b)(2) and the fee required by 37 CFR 1.18(e), the USPTO will issue a certificate of correction reflecting the PTA determination noted above.

Patentee should be aware that in order to preserve the right to review in the United States District Court for the District of Columbia of the USPTO patent term adjustment determination, patentee must ensure that he or she also take the steps required under 35 U.S.C. 154(b)(4)(A) in a timely manner. Nothing in the request for recalculation should be construed as providing an alternative time frame for commencing a civil action under 35 U.S.C. 154(b)(4)(A).

Any questions concerning this decision should be directed to the Office of Patent Legal Administration at 571-272-7702.

UNITED STATES PATENT AND TRADEMARK OFFICE

Commissioner for Patents
United States Patent and Trademark Office
P.O. Box 1450
Alexandria, VA 22313-1450
www.uspto.gov

HOLLAND & KNIGHT, LLP
ONE EAST BROWARD BLVD.
SUITE 1300
FT LAUDERDALE FL 33301

COPY MAILED

JAN 1 0 2007

OFFICE OF PETITIONS

In re Application of
Paul F. Becker, et al.
Application No. 10/927,840
Filed: August 27, 2004
Attorney Docket No. 086161.00001

DECISION ON PETITION
TO WITHDRAW
FROM RECORD

This is a decision on the Request to Withdraw as attorney or agent of record under 37 C.F.R. § 1.36(b) filed September 29, 2006.

The request is **NOT APPROVED**.

A grantable request to withdraw as attorney/agent of record must be signed by every attorney/agent seeking to withdraw or contain a clear indication that one attorney is signing on behalf of another/others. A request to withdraw will not be approved unless at least 30 (thirty) days would remain between the date of approval and the later of the expiration date of a time to file a response or the expiration date of the maximum time period which can be extended under 37 C.F.R. § 1.136(a).

The Office cannot approve the request at this time since the reasons provided do not meet any of the conditions under the mandatory or permissive categories enumerated in 37 CFR 10.40. Section 10.40 of Title 37 of the Code of Federal Regulation states, "[a] practitioner shall not withdraw from employment in a proceeding before the Office without permission from the Office[.]" More specifically, 37 CFR 10.40 states, "[i]f paragraph (b) of this section is not applicable, a practitioner may not request permission to withdraw in matter pending before the Office unless such request or such withdrawal is" for one the permissive reasons listed in 37 CFR 10.40(c). The reasons set forth in the request, "the attorney of record for this case is no longer affiliated with law firm", do not meet any the conditions set forth in 37 CFR 10.40.

All future communications from the Office will continue to be directed to the above-listed address until otherwise notified by applicant.

There is an outstanding Office action mailed September 13, 2006 that requires a reply from the applicant.

Telephone inquiries concerning this decision should be directed to April Wise at 571-272-1642.

April M. Wise
Petitions Examiner
Office of Petitions

cc: MR. PAUL F. BECKER
1433 S.W. STONY AVENUE
PORT SAINT LUCIE, FL 34953

UNITED STATES PATENT AND TRADEMARK OFFICE

Commissioner for Patents
United States Patent and Trademark Office
P.O. Box 1450
Alexandria, VA 22313-1450
www.uspto.gov

PHILIP S. JOHNSON
JOHNSON & JOHNSON
ONE JOHNSON & JOHNSON PLAZA
NEW BRUNSWICK NJ 08933-7003

COPY MAILED

SEP 30 2005

OFFICE OF PETITIONS

In re Application of :
P. Mark Powell :
Application No. 10/927,843 : ON PETITION
Filed: August 27, 2004 :
Attorney's Docket No. VTN5040 :

This is a decision on the petition filed July 26, 2005 under 37 CFR 1.137(b), to revive the above-identified application.

The petition is **GRANTED**.

The instant application became abandoned on December 30, 2004, for failure to timely reply to the Notice to File Missing Parts, mailed October 29, 2004, which set a two (2) month shortened statutory period for reply. No extensions of the time for reply in accordance with 37 CFR 1.136(a) were obtained. Accordingly, a Notice of Abandonment was mailed July 11, 2005.

The oath or declaration and late filing surcharge, as required by the Notice to File Missing Parts mailed October 29, 2004, in addition to the petition fee is acknowledged.

All other requirements having been met , this application is being forwarded to the Office of Initial Patent Examination for further pre-examination processing.

Telephone inquiries concerning this matter may be directed to the undersigned Petitions Attorney at (571) 272-3212.

Patricia Faison-Ball

Patricia Faison-Ball
Senior Petitions Attorney
Office of Petitions

UNITED STATES PATENT AND TRADEMARK OFFICE

UNITED STATES DEPARTMENT OF COMMERCE
United States Patent and Trademark Office
Address: COMMISSIONER FOR PATENTS
P.O. Box 1450
Alexandria, Virginia 22313-1450
www.uspto.gov

WARNER NORCROSS & JUDD LLP
900 FIFTH THIRD CENTER
111 LYON STREET, N.W.
GRAND RAPIDS, MI 49503-2487

Mail Date: 04/21/2010

Applicant	: Timothy P. Coffield	: DECISION ON REQUEST FOR
Patent Number	: 7647714	: RECALCULATION of PATENT
Issue Date	: 01/19/2010	: TERM ADJUSTMENT IN VIEW
Appliction No	: 10/927,846	: OF WYETH AND NOTICE OF INTENT TO
Filed	: 08/27/2004	: ISSUE CERTIFICATE OF CORRECTION
		:

The Request for Recalculation is **GRANTED** to the extent indicated.

The patent term adjustment has been determined to be **1498** days. The USPTO will *sua sponte* issue a certificate of correction reflecting the amount of PTA days determined by the recalculation.

Prior to the issuance of the certificate of correction, the USPTO will afford patentee an opportunity to be heard and request reconsideration. Accordingly, patentee has **one month or thirty (30) days**, whichever is longer, to file a request for reconsideration of this patent term adjustment calculation. See 35 U.S.C. 154(b)(3)(B)(ii) and 37 CFR 1.322(a)(4). No extensions of time will be granted under 37 CFR 1.136.

Patentee should use document code PET.OP if electronically filing a request for reconsideration of this patent term adjustment calculation. The patentee must also include the information required by 37 CFR 1.705(b)(2) and the fee required by 37 CFR 1.18(e). If patentee does not file a timely request for reconsideration of this patent term adjustment calculation including the information required by 37 CFR 1.705(b)(2) and the fee required by 37 CFR 1.18(e), the USPTO will issue a certificate of correction reflecting the PTA determination noted above.

Patentee should be aware that in order to preserve the right to review in the United States District Court for the District of Columbia of the USPTO patent term adjustment determination, patentee must ensure that he or she also take the steps required under 35 U.S.C. 154(b)(4)(A) in a timely manner. Nothing in the request for recalculation should be construed as providing an alternative time frame for commencing a civil action under 35 U.S.C. 154(b)(4)(A).

Any questions concerning this decision should be directed to the Office of Patent Legal Administration at 571-272-7702.

UNITED STATES PATENT AND TRADEMARK OFFICE

Commissioner for Patents
United States Patent and Trademark Office
P.O. Box 1450
Alexandria, VA 22313-1450
www.uspto.gov

TEXAS INSTRUMENTS INCORPORATED
P O BOX 655474, M/S 3999
DALLAS, TX 75265

COPY MAILED

FEB 14 2005

OFFICE OF PETITIONS

In re Application of :
Varghese, et al. :
Application No. 10/927,858 :
Filed: August 27, 2004 :
Attorney Docket No. TI-37102 :

DECISION GRANTING PETITION

This is a decision on the petition filed December 21, 2004, to accord the above-identified application a filing date of August 27, 2004.

On August 27, 2004, the application was deposited.

On October 25, 2004, the Office of Initial Patent Examination mailed a Notice stating that a filing date had not been accorded the application because drawings were not present on filing, but appeared to be required to understand the invention claimed.

In response, the present petition alleges that the drawings were filed with the original application papers and must have been misdirected by the Office.

A review of the application file did not reveal any drawings, and the instant petition does not provide *prima facie* evidence that the Office received the drawings on August 27, 2004. Such *prima facie* evidence would normally be provided in the form of an itemized Office date-stamped postcard acknowledging receipt of those items listed. It has been determined, however, that drawings are not necessary to understand at least one claim within the meaning of the first sentence of 35 USC 113. It has been PTO practice to treat an application that contains at least one process or method claim as an application for which a drawing is not necessary for an understanding of the invention under 35 U.S.C. 113 (first sentence).[1] A review of the record reveals that claim 9 is a method claim. Therefore, the present application is deemed to be an application that does not require a drawing for an understanding of the invention. Accordingly, the application, as filed, is entitled to a filing date.

In view of the above, the petition is **granted. The application is accorded a filing date of August 27, 2004.**

The drawings, filed December 21, 2004, are noted.

Deposit account 20-0668 will be refunded the petition fee of $130.00.

The application is being returned to the Office of Initial Patent Examination for further processing with a filing date of August 27, 2004 and for issuance of a corrected filing receipt. Thereafter, the application

[1]MPEP 601.01(f).

will be forwarded to the appropriate group art unit for consideration by the examiner of the petition filed December 21, 2004, as a supplemental preliminary amendment requesting entry of the five pages of drawings filed on December 21, 2004.

Any inquiries related to this decision should be directed to the undersigned at (571)272-3222.

Kenya A. McLaughlin
Petitions Attorney
Office of Petitions

UNITED STATES PATENT AND TRADEMARK OFFICE

Commissioner for Patents
United States Patent and Trademark Office
P.O. Box 1450
Alexandria, VA 22313-1450
www.uspto.gov

JUN 14 2005

Danuta Petelenz
2520 Blaine Ave.
Salt Lake City UT 84108

In re Application of	:	
Petelenz et al	:	
Serial No.: 10/927,865	:	DECISION ON PETITION
Filed: August 28, 2004	:	
For: DEVICE FOR CHEST AND ABDOMINAL	:	
COMPRESSION CPR	:	

This is in response to applicants' petition filed August 28, 2004, to make the above-identified application special under the provisions of 37 CFR 1.102(c), based on the age of the applicant.

Applicant has satisfied the provisions set forth in M.P.E.P. 708.02, IV. Therefore the petition is **GRANTED**.

The application will be forwarded to the examiner for action on the merits commensurate with this decision.

Should there be any questions with regard to this letter please contact Frederick Schmidt, by letter addressed to the Director, Technology Center 3700, P.O. Box 1450 Alexandria, VA 22313-1450, or by telephone at (571) 272-2975 or by facsimile transmission at (571) 273-0275.

Frederick R. Schmidt, Director
Technology Center 3700

UNITED STATES PATENT AND TRADEMARK OFFICE

UNITED STATES DEPARTMENT OF COMMERCE
United States Patent and Trademark Office
Address: COMMISSIONER FOR PATENTS
P.O. Box 1450
Alexandria, Virginia 22313-1450
www.uspto.gov

TROP, PRUNER & HU, P.C.
1616 S. VOSS ROAD, SUITE 750
HOUSTON, TX 77057-2631

Mail Date: 05/05/2010

Applicant	: Robert P. Meagley	: DECISION ON REQUEST FOR
Patent Number	: 7615337	: RECALCULATION of PATENT
Issue Date	: 11/10/2009	: TERM ADJUSTMENT IN VIEW
Application No	: 10/927,885	: OF WYETH AND NOTICE OF INTENT TO
Filed	: 08/27/2004	: ISSUE CERTIFICATE OF CORRECTION
		:

The Request for Recalculation is **GRANTED** to the extent indicated.

The patent term adjustment has been determined to be **1203** days. The USPTO will *sua sponte* issue a certificate of correction reflecting the amount of PTA days determined by the recalculation.

Prior to the issuance of the certificate of correction, the USPTO will afford patentee an opportunity to be heard and request reconsideration. Accordingly, patentee has **one month or thirty (30) days**, whichever is longer, to file a request for reconsideration of this patent term adjustment calculation. See 35 U.S.C. 154(b)(3)(B)(ii) and 37 CFR 1.322(a)(4). No extensions of time will be granted under 37 CFR 1.136.

Patentee should use document code PET.OP if electronically filing a request for reconsideration of this patent term adjustment calculation. The patentee must also include the information required by 37 CFR 1.705(b)(2) and the fee required by 37 CFR 1.18(e). If patentee does not file a timely request for reconsideration of this patent term adjustment calculation including the information required by 37 CFR 1.705(b)(2) and the fee required by 37 CFR 1.18(e), the USPTO will issue a certificate of correction reflecting the PTA determination noted above.

Patentee should be aware that in order to preserve the right to review in the United States District Court for the District of Columbia of the USPTO patent term adjustment determination, patentee must ensure that he or she also take the steps required under 35 U.S.C. 154(b)(4)(A) in a timely manner. Nothing in the request for recalculation should be construed as providing an alternative time frame for commencing a civil action under 35 U.S.C. 154(b)(4)(A).

Any questions concerning this decision should be directed to the Office of Patent Legal Administration at 571-272-7702.

UNITED STATES PATENT AND TRADEMARK OFFICE

UNITED STATES DEPARTMENT OF COMMERCE
United States Patent and Trademark Office
Address: COMMISSIONER FOR PATENTS
P.O. Box 1450
Alexandria, Virginia 22313-1450
www.uspto.gov

Constellation Law Group, PLLC
P.O. Box 220
Tracyton, WA 98393

Mail Date: 05/12/2010

Applicant	: Bran Ferren	: DECISION ON REQUEST FOR
Patent Number	: 7642037	: RECALCULATION of PATENT
Issue Date	: 01/05/2010	: TERM ADJUSTMENT IN VIEW
Application No	: 10/927,898	: OF WYETH AND NOTICE OF INTENT TO
Filed	: 08/27/2004	: ISSUE CERTIFICATE OF CORRECTION
		:

The Request for Recalculation is **GRANTED** to the extent indicated.

The patent term adjustment has been determined to be **676** days. The USPTO will *sua sponte* issue a certificate of correction reflecting the amount of PTA days determined by the recalculation.

Prior to the issuance of the certificate of correction, the USPTO will afford patentee an opportunity to be heard and request reconsideration. Accordingly, patentee has **one month or thirty (30) days**, whichever is longer, to file a request for reconsideration of this patent term adjustment calculation. See 35 U.S.C. 154(b)(3)(B)(ii) and 37 CFR 1.322(a)(4). No extensions of time will be granted under 37 CFR 1.136.

Patentee should use document code PET.OP if electronically filing a request for reconsideration of this patent term adjustment calculation. The patentee must also include the information required by 37 CFR 1.705(b)(2) and the fee required by 37 CFR 1.18(e). If patentee does not file a timely request for reconsideration of this patent term adjustment calculation including the information required by 37 CFR 1.705(b)(2) and the fee required by 37 CFR 1.18(e), the USPTO will issue a certificate of correction reflecting the PTA determination noted above.

Patentee should be aware that in order to preserve the right to review in the United States District Court for the District of Columbia of the USPTO patent term adjustment determination, patentee must ensure that he or she also take the steps required under 35 U.S.C. 154(b)(4)(A) in a timely manner. Nothing in the request for recalculation should be construed as providing an alternative time frame for commencing a civil action under 35 U.S.C. 154(b)(4)(A).

Any questions concerning this decision should be directed to the Office of Patent Legal Administration at 571-272-7702.

UNITED STATES PATENT AND TRADEMARK OFFICE

Commissioner for Patents
United States Patent and Trademark Office
P.O. Box 1450
Alexandria, VA 22313-1450
www.uspto.gov

TOWNSEND TOWNSEND & CREW, LLP
TWO EMBARCADERO CENTER, EIGHTH FLOOR
SAN FRANCISCO, CA 94111-3834

COPY MAILED

JUN 2 6 2008

OFFICE OF PETITIONS

In re Application of :
DERVIEUX, et al. :
Application No. 10/927,904 : DECISION ON PETITION
Filed: August 26, 2004 : TO WITHDRAW
Attorney Docket No. **CYPR-028/02US** : FROM RECORD
:

This is a decision on the Request to Withdraw as attorney or agent of record under 37 C.F.R. § 1.36(b), filed April 23, 2008.

The request is **DISMISSED** as moot.

A review of the file record indicates that the power of attorney to **TOWNSEND TOWNSEND & CREW, LLP** has been revoked by the assignee of the patent application on June 19, 2008. Accordingly, the request to withdraw under 37 C.F.R. § 1.36(b) is moot.

All future communications from the Office will continue to be directed to the below-listed address until otherwise notified by applicant.

Telephone inquires concerning this decision should be directed to the undersigned at (571) 272- 7253.

Monica A. Graves
Petitions Examiner
Office of Petitions

cc: **COOLEY GODWARD KRONISH, LLP**
ATTN: PATENT GROUP
777 – 6TH STREET NW, SUITE 1100
WASHINGTON, DC 20001

UNITED STATES PATENT AND TRADEMARK OFFICE

UNITED STATES DEPARTMENT OF COMMERCE
United States Patent and Trademark Office
Address: COMMISSIONER FOR PATENTS
P.O. Box 1450
Alexandria, Virginia 22313-1450
www.uspto.gov

APPL NO.	FILING OR 371 (c) DATE	ART UNIT	FIL FEE REC'D	ATTY.DOCKET NO	DRAWINGS	TOT CLMS	IND CLMS
10/927,905	08/27/2004	3634	860	65,310-006	7	25	1

CONFIRMATION NO. 1961

CORRECTED FILING RECEIPT

OC000000014697471

27305
HOWARD & HOWARD ATTORNEYS, P.C.
THE PINEHURST OFFICE CENTER, SUITE #101
39400 WOODWARD AVENUE
BLOOMFIELD HILLS, MI 48304-5151

Date Mailed: 12/09/2004

Receipt is acknowledged of this regular Patent Application. It will be considered in its order and you will be notified as to the results of the examination. Be sure to provide the U.S. APPLICATION NUMBER, FILING DATE, NAME OF APPLICANT, and TITLE OF INVENTION when inquiring about this application. Fees transmitted by check or draft are subject to collection. Please verify the accuracy of the data presented on this receipt. **If an error is noted on this Filing Receipt, please write to the Office of Initial Patent Examination's Filing Receipt Corrections, facsimile number 703-746-9195. Please provide a copy of this Filing Receipt with the changes noted thereon. If you received a "Notice to File Missing Parts" for this application, please submit any corrections to this Filing Receipt with your reply to the Notice. When the USPTO processes the reply to the Notice, the USPTO will generate another Filing Receipt incorporating the requested corrections (if appropriate).**

Applicant(s)

Brian Kinross, Florence, KY;

Power of Attorney: The patent practitioners associated with Customer Number **27305**.

Domestic Priority data as claimed by applicant

This appln claims benefit of 60/499,235 08/29/2003

Foreign Applications

If Required, Foreign Filing License Granted: 10/25/2004

The country code and number of your priority application, to be used for filing abroad under the Paris Convention, is US10/927,905

Projected Publication Date: 03/17/2005

Non-Publication Request: No

Early Publication Request: No

Title

Sliding window assembly having an encapsulation with a silicone-based polymer

Preliminary Class

049

LICENSE FOR FOREIGN FILING UNDER
Title 35, United States Code, Section 184
Title 37, Code of Federal Regulations, 5.11 & 5.15

GRANTED

The applicant has been granted a license under 35 U.S.C. 184, if the phrase "IF REQUIRED, FOREIGN FILING LICENSE GRANTED" followed by a date appears on this form. Such licenses are issued in all applications where the conditions for issuance of a license have been met, regardless of whether or not a license may be required as set forth in 37 CFR 5.15. The scope and limitations of this license are set forth in 37 CFR 5.15(a) unless an earlier license has been issued under 37 CFR 5.15(b). The license is subject to revocation upon written notification. The date indicated is the effective date of the license, unless an earlier license of similar scope has been granted under 37 CFR 5.13 or 5.14.

This license is to be retained by the licensee and may be used at any time on or after the effective date thereof unless it is revoked. This license is automatically transferred to any related applications(s) filed under 37 CFR 1.53(d). This license is not retroactive.

The grant of a license does not in any way lessen the responsibility of a licensee for the security of the subject matter as imposed by any Government contract or the provisions of existing laws relating to espionage and the national security or the export of technical data. Licensees should apprise themselves of current regulations especially with respect to certain countries, of other agencies, particularly the Office of Defense Trade Controls, Department of State (with respect to Arms, Munitions and Implements of War (22 CFR 121-128)); the Office of Export Administration, Department of Commerce (15 CFR 370.10 (j)); the Office of Foreign Assets Control, Department of Treasury (31 CFR Parts 500+) and the Department of Energy.

NOT GRANTED

No license under 35 U.S.C. 184 has been granted at this time, if the phrase "IF REQUIRED, FOREIGN FILING LICENSE GRANTED" DOES NOT appear on this form. Applicant may still petition for a license under 37 CFR 5.12, if a license is desired before the expiration of 6 months from the filing date of the application. If 6 months has lapsed from the filing date of this application and the licensee has not received any indication of a secrecy order under 35 U.S.C. 181, the licensee may foreign file the application pursuant to 37 CFR 5.15(b).

UNITED STATES PATENT AND TRADEMARK OFFICE

Commissioner for Patents
United States Patent and Trademark Office
P.O. Box 1450
Alexandria, VA 22313-1450
www.uspto.gov

Edward J. Timmer
P.O. Box 770
Richland MI 49083

COPY MAILED
NOV 0 2 2006
OFFICE OF PETITIONS

In re Application of
Hung et al.
Application No. 10/927,924
Filed: August 27, 2004
Attorney Docket No. UGA944

DECISION ON PETITION

This is a decision on the petition under 37 CFR 1.137(b), filed April 21, 2006, to revive the above-identified application.

The above-identified application became abandoned for failure to file a timely response to the nonfinal Office Action, mailed October 4, 2005, which set a three-month shortened statutory period for reply. The above-identified application became abandoned on January 5, 2006.

Petitioner has met the requirements to revive the above-identified application pursuant to 37 CFR 1.137(b). Petitioner submitted the required reply, paid the petition fee, and made the proper statement of unintentional delay. Accordingly, the petition is **granted.**

An extension of time under 37 CFR 1.136 must be filed prior to the expiration of the maximum extendable period for reply. See In re Application of S., 8 USPQ2d 1630, 1631 (Comm'r Pats. 1988). Since the $510.00 extension of time fee submitted with the petition on April 21, 2006, was subsequent to the maximum extendable period for reply, this fee is unnecessary and will be credited to petitioner's deposit account.

This matter is being referred to Technology Center Art Unit 1753.

Telephone inquiries specific to this decision may be directed to the undersigned at (571) 272-3211. All other inquiries concerning either the examination procedures or status of the application should be directed to the Technology Center.

Christina T. Donnell

Christina Tartera Donnell
Senior Petitions Attorney
Office of Petitions

UNITED STATES PATENT AND TRADEMARK OFFICE

Commissioner for Patents
United States Patent and Trademark Office
P.O. Box 1450
Alexandria, VA 22313-1450
www.uspto.gov

EDWARD YOO/C/O BENNETT JONES
1000 ATCO CENTRE
10035 - 105 STREET
EDMONTON, ALBERTA AB T5J3T-2 CA
CANADA

COPY MAILED

APR 10 2007

OFFICE OF PETITIONS

In re Application of	:
Rob Wellwood et al	:
Application No. 10/927,942	: DECISION GRANTING PETITION
Filed: August 27, 2004	: UNDER 37 CFR 1.137(b)
Attorney Docket No. 30319.470	:

This is a decision on the petition under 37 CFR 1.137(b), filed March 22, 2007, to revive the above-identified application.

The petition is **GRANTED**.

The petition satisfies the conditions for revival pursuant to the provisions of 37 CFR 1.137(b) in that (1) the reply in the form of an RCE and an amendment; (2) the petition fee; and (3) the required statement of unintentional delay have been received. Accordingly, the reply to the Final Rejection of June 26, 2006, is accepted as having been unintentionally delayed.

Telephone inquiries concerning this decision should be directed to the undersigned at (571) 272-3208.

This matter is being referred to Technology Center AU 1772.

Karen Creasy

Karen Creasy
Petitions Examiner
Office of Petitions

UNITED STATES PATENT AND TRADEMARK OFFICE

COMMISSIONER FOR PATENTS
UNITED STATES PATENT AND TRADEMARK OFFICE
P.O. BOX 1450
ALEXANDRIA, VA 22313-1450
www.uspto.gov

Paper No.

KLAUBER & JACKSON
411 HACKENSACK AVENUE
HACKENSACK NJ 07601

COPY MAILED

SEP 21 2005

OFFICE OF PETITIONS

In re Application of :
Altaba et al. : DECISION ON
Application No. 10/927,951 : PETITION
Filed: August 29, 2004 :
Attorney Docket No. 2806-1-001:
:

This is a decision on the "PETITION UNDER 37 CFR 1.181(f)" filed December 27, 2004, requesting, in effect, that the Notice of Missing Parts of Nonprovisional Application be withdrawn to the extent that it asserts that figures 7B and 7C were omitted from the application on filing. This petition is properly treated under §1.182.

The petition is **DISMISSED**.

Application papers in the above-identified application were filed on August 29, 2004. However, on October 26, 2004, the Initial Patent Examination Division mailed a "Notice of Missing Parts of Nonprovisional Application," notifying applicants, inter alia, that the application papers had been accorded a filing date; however, figures 7B and C described in the specification appeared to have been omitted from the application.

In response, the present petition was timely filed. Petitioners assert that Figures 7B and 7C were not missing on August 29, 2004. Instead, Figures 7B and 7C were present on the sheet of drawings containing Figure 7A. A duplicate copy of the sheet containing Figures 7A - 7C, as shown in applicants' file copy of the application, has been submitted with the present petition.

Upon review of the petition, it is not obvious that Figures 7B and 7C were present in the application on filing. Petitioners acknowledge that the application as filed contained an underexposed copy of Figure 7A, B and C. Further, petitioners assert that the letter C was present but very faint, due to the exposure of the copy machine, and the letter B was too underexposed to be evident. However, petitioners argue as shown in the copy of the figure 7 submitted on petition, all three letter designations are evident in the same figure.

37 CFR 1.84(p)(1) states that drawing reference characters must be plain and legible. However, the legends for Figures 7B and 7C are not plain and legible. As such, the "Notice" mailed on October 26, 2004, was correct in stating that Figures 7B and 7C described in the specification appeared to have been omitted. Therefore, the "Notice" was properly mailed and will not be withdrawn.

Furthermore, a copy of the drawing sheet containing figures 7A, 7B and 7C as filed (prior to scanning into the Image File Wrapper) was reviewed. This drawing sheet due to the acknowledged copying problems and underexposure is not identical to the drawing sheet submitted on petition. Not only are the reference characters missing, but the exposures of the drawing figures are different. The original disclosure of this application includes the drawing sheet as filed in this Office on August 29, 2004. Application papers, such as the different drawing sheet submitted on petition, not present in the application on filing cannot be considered a part of the original application disclosure.

The present petition was not necessitated by any error on the part of the Office and the $400.00 petition was required upon filing of the petition. Thus, the $400.00 petition fee will not be refunded.

The application will be processed using the application papers filed on August 29, 2004. The copy of the drawing figures supplied with the present petition will not be used for processing but will be retained in the application file.

The application was properly processed with a filing date of August 29, 2004, using the application papers filed on that date.

Telephone inquiries concerning this matter may be directed to the undersigned at (571) 272-3219.

Nancy Johnson
Senior Petitions Attorney
Office of Petitions

UNITED STATES PATENT AND TRADEMARK OFFICE

Commissioner for Patents
United States Patent and Trademark Office
P.O. Box 1450
Alexandria, VA 22313-1450
www.uspto.gov

RANDALL B. BATEMAN
BATEMAN IP LAW GROUP
8 EAST BROADWAY, SUITE 550
P.O. BOX 1319
SALT LAKE CITY, UT 84110

COPY MAILED

APR 0 3 2008

OFFICE OF PETITIONS

In re Application of	:	
Richard H. DIXON	:	
Application No. 10/927,968	:	DECISION ON PETITION
Filed: August 27, 2004	:	
Attorney Docket No. 6097.1P	:	

This is a decision on the petition under the unintentional provisions of 37 CFR 1.137(b), filed October 2, 2007, to revive the above-identified application.

The petition is **GRANTED**.

The application became abandoned for failure to reply in a timely manner to the Restriction Requirement, mailed October 27, 2006 , which set a shortened statutory period for reply of one (1) month or thirty (30) days (whichever is later). No extensions of time under the provisions of 37 CFR 1.136(a) were obtained. Accordingly, the application became abandoned on November 28, 2006.

The petition satisfies the requirements of 37 CFR 1.137(b) in that petitioner has supplied (1) the reply in the form of an election and amendment, (2) the petition fee of $770; and (3) an adequate statement of unintentional delay.

It is not apparent whether the person signing the statement of unintentional delay was in a position to have firsthand or direct knowledge of the facts and circumstances of the delay at issue. Nevertheless, such statement is being treated as having been made as the result of a reasonable inquiry into the facts and circumstances of such delay. See 37 CFR 10.18(b) and Changes to Patent Practice and Procedure; Final Rule Notice, 62 Fed. Reg. 53131, 53178 (October 10, 1997), 1203 Off. Gaz. Pat. Office 63, 103 (October 21, 1997). In the event that such an inquiry has not been made, petitioner must make such an inquiry. If such inquiry results in the discovery that it is not correct that the entire delay in filing the required reply from the due date for the reply until the filing of a grantable petition pursuant to 37 CFR 1.137(b) was unintentional, petitioner must notify the Office.

Telephone inquiries concerning this decision should be directed to Diane Goodwyn at (571) 272-6735.

This application is being referred to Technology Center AU 3672 for appropriate action by the Examiner in the normal course of business on the reply received October 2, 2007.

April Wise
Petitions Examiner
Office of Petitions

UNITED STATES PATENT AND TRADEMARK OFFICE

UNITED STATES DEPARTMENT OF COMMERCE
United States Patent and Trademark Office
Address: COMMISSIONER FOR PATENTS
P.O. Box 1450
Alexandria, Virginia 22313-1450
www.uspto.gov

APPLICATION NUMBER	FILING OR 371(C) DATE	FIRST NAMED APPLICANT	ATTY. DOCKET NO./TITLE
10/927,968	08/27/2004	Richard H. Dixon	6097.1 P

CONFIRMATION NO. 2340

POA ACCEPTANCE LETTER

OC000000028345378

27472
RANDALL B. BATEMAN
BATEMAN IP LAW GROUP
8 EAST BROADWAY, SUITE 550
PO BOX 1319
SALT LAKE CITY, UT 84110

Date Mailed: 02/15/2008

NOTICE OF ACCEPTANCE OF POWER OF ATTORNEY

This is in response to the Power of Attorney filed 10/02/2007.

The Power of Attorney in this application is accepted. Correspondence in this application will be mailed to the above address as provided by 37 CFR 1.33.

/dcgoodwyn/

Office of Initial Patent Examination (571) 272-4000 or 1-800-PTO-9199

UNITED STATES PATENT AND TRADEMARK OFFICE

UNITED STATES DEPARTMENT OF COMMERCE
United States Patent and Trademark Office
Address: COMMISSIONER FOR PATENTS
P.O. Box 1450
Alexandria, Virginia 22313-1450
www.uspto.gov

PACESETTER, INC.
15900 VALLEY VIEW COURT
SYLMAR, CA 91392-9221

Mail Date: 04/21/2010

Applicant	: Mark W. Kroll	: DECISION ON REQUEST FOR
Patent Number	: 7596412	: RECALCULATION of PATENT
Issue Date	: 09/29/2009	: TERM ADJUSTMENT IN VIEW
Appliction No	: 10/927,971	: OF WYETH AND NOTICE OF INTENT TO
Filed	: 08/26/2004	: ISSUE CERTIFICATE OF CORRECTION
		:

The Request for Recalculation is **GRANTED** to the extent indicated.

The patent term adjustment has been determined to be **1120** days. The USPTO will *sua sponte* issue a certificate of correction reflecting the amount of PTA days determined by the recalculation.

Prior to the issuance of the certificate of correction, the USPTO will afford patentee an opportunity to be heard and request reconsideration. Accordingly, patentee has **one month or thirty (30) days**, whichever is longer, to file a request for reconsideration of this patent term adjustment calculation. See 35 U.S.C. 154(b)(3)(B)(ii) and 37 CFR 1.322(a)(4). No extensions of time will be granted under 37 CFR 1.136.

Patentee should use document code PET.OP if electronically filing a request for reconsideration of this patent term adjustment calculation. The patentee must also include the information required by 37 CFR 1.705(b)(2) and the fee required by 37 CFR 1.18(e). If patentee does not file a timely request for reconsideration of this patent term adjustment calculation including the information required by 37 CFR 1.705(b)(2) and the fee required by 37 CFR 1.18(e), the USPTO will issue a certificate of correction reflecting the PTA determination noted above.

Patentee should be aware that in order to preserve the right to review in the United States District Court for the District of Columbia of the USPTO patent term adjustment determination, patentee must ensure that he or she also take the steps required under 35 U.S.C. 154(b)(4)(A) in a timely manner. Nothing in the request for recalculation should be construed as providing an alternative time frame for commencing a civil action under 35 U.S.C. 154(b)(4)(A).

Any questions concerning this decision should be directed to the Office of Patent Legal Administration at 571-272-7702.

UNITED STATES PATENT AND TRADEMARK OFFICE

Commissioner for Patents
United States Patent and Trademark Office
P.O. Box 1450
Alexandria, VA 22313-1450
www.uspto.gov

COPY MAILED

AUG 3 1 2005

OFFICE OF PETITIONS

KENYON & KENYON
ONE BROADWAY
NEW YORK, NY 10004

In re Application of :
Bartels, et al. :
Application No. 10/927,991 : DECISION GRANTING PETITION
Filed: August 26, 2004 :
Attorney Docket No. 11150/28A :

This is a decision on the petition filed March 18, 2005, requesting that the above-identified application retain the presently accorded a filing date of August 26, 2005, with Figures 15 and 16, as described in the specification, as part of the original disclosure.

On August 26, 2004, the above-identified application was filed. On January 18, 2005, the Office of Initial Patent Examination mailed a "Notice to File Missing Parts of Nonprovisional Application" (the "Notice"), stating that the application had been accorded a filing date of August 26, 2004, however, Figures 15 and 16, as described in the specification, appeared to have been omitted. As to the omitted figures, the Notice allowed a non-extendable two-month period for reply beginning from the mailing date of the Notice.

In response, on March 18, 2005, applicants filed the present petition and a copy of an Office date-stamped postcard showing that, among other items, eleven sheets of drawings were received on August 26, 2004.

Upon review of the record, Figures 15 and 16 have not been located among the application papers. However, the evidence is convincing that the application papers deposited August 26, 2004, included Figures 15 and 16, which were subsequently misplaced by the Office. Therefore, the application, including Figures 15 and 16 as described in the specification was complete on filing and entitled to the presently accorded filing date of August 26, 2005.

Accordingly, the petition is granted.

The application file is being returned to the Office of Initial Patent Examination for further processing with the presently accorded filing date of August 26, 2004, including Figures 15 and 16.

Any inquiries related to this decision should be directed to the undersigned at (571) 272-3222.

Kenya A. McLaughlin

Kenya A. McLaughlin
Petitions Attorney
Office of Petitions

UNITED STATES PATENT AND TRADEMARK OFFICE

Commissioner for Patents
United States Patent and Trademark Office
P.O. Box 1450
Alexandria, VA 22313-1450
www.uspto.gov

TOWNSEND AND TOWNSEND AND CREW LLP
TWO EMBARCADERO CENTER
EIGHTH FLOOR
SAN FRANCISCO CA 94111-3834

COPY MAILED

APR 0 2 2007

OFFICE OF PETITIONS

In re Application of	:	
Chen, et al.	:	
Application No. 10/928,004	:	ON PETITION
Filed: August 27, 2004	:	
Attorney Docket No. 021653-005200US	:	

This is a decision on the petition to revive under 37 CFR 1.137(b), filed January 29, 2007, which is being treated as a petition to withdraw the holding of abandonment under 37 CFR 1.181.

The petition under 37 CFR 1.181 is **GRANTED**.

The above-identified application became abandoned for failure to timely file a reply in response to the non-final Office action mailed September 1, 2005. This Office action set an extendable period for reply of three (3) months. No reply having been received, the application became abandoned on December 2, 2005. A Notice of Abandonment was mailed on November 17, 2006.[1]

A review of the file reveals that the September 1, 2005 Office action, for reasons not apparent to the Office, was returned as undeliverable. Accordingly, it is obvious that the Office action was not received by Applicants.

In view thereof, the holding of abandonment is **WITHDRAWN**.

Given the basis for granting this petition, the $1,500 petition fee has been refunded to Deposit Account No. 20-1430.

---

[1] The Notice of Abandonment indicated that the application became abandoned for failure to timely file a reply to an Office letter mailed on April 10, 2006. However, no such letter is found in the application file.

The matter is being forwarded to Group Art Unit 2826 for re-mailing of the September 1, 2005 Office action, setting a new period for reply.

Telephone inquiries concerning this decision should be directed to the undersigned at (571)272-3207.

Cliff Congo
Petitions Attorney
Office of Petitions

UNITED STATES PATENT AND TRADEMARK OFFICE

Commissioner for Patents
United States Patent and Trademark Office
P.O. Box 1450
Alexandria, VA 22313-1450
www.uspto.gov

TOWNSEND AND TOWNSEND AND CREW LLP
TWO EMBARCADERO CENTER
EIGHTH FLOOR
SAN FRANCISCO CA 94111-3834

COPY MAILED

NOV 29 2007

OFFICE OF PETITIONS

In re Application of	:	
John Chen	:	
Application No. 10/928,004	:	ON PETITION
Filed: August 27, 2004	:	
Attorney Docket No. 021653-005200US	:	

This is a decision on the petition to revive an unintentionally abandoned application under 37 CFR 1.137(b), filed October 26, 2007.

The petition under 37 CFR 1.137(b) is **GRANTED**.

The above-identified application became abandoned for failure to timely pay the issue fee in response to the Notice of Allowance mailed May 7, 2007. This notice set a statutory period for reply of three (3) months. Applicants filed the issue fee on August 8, 2007. Accordingly, the application became abandoned on August 8, 2007. The Office mailed a Notice of Abandonment on August 30, 2007.

With the instant petition, applicant paid the petition fee and made the proper statement of unintentional delay. The required reply in the form of the issue fee was previously filed on August 8, 2007.

The matter is being forwarded to the Office of Patent Publication for processing into a patent.

Telephone inquiries related to this decision should be directed to the undersigned at (571)272-3207.

Cliff Congo
Petitions Attorney
Office of Petitions

UNITED STATES PATENT AND TRADEMARK OFFICE

Commissioner for Patents
United States Patent and Trademark Office
P.O. Box 1450
Alexandria, VA 22313-1450
www.uspto.gov

NOV 23 2004

RICHARD ARON OSMAN
SCIENCE AND TECHNOLOGY LAW GROUP
242 AVE VISTA DEL OCEANO
SAN CLEMEMTE CA 92672

: PETITION TO MAKE SPECIAL

In re Application of
Qiang Zhou et al
Serial No.: 10/928009
Filed: August 27, 2004
Attorney Docket No.: B04-089

This is in response to applicants' petition filed November 3, 2004, to make the above-identified application special under the provisions of 37 CFR 1.102(d) and MPEP 708.02, X, based on methods of treating HIV, by providing a method for inhibiting HIV replication in a patient using HIV therapeutics of viral vectors that expresses recombinant HEXIM1 and hybrid polar compounds.
Applicant has satisfied the provisions set forth in M.P.E.P. 708.02, X and submitted the appropriate fee under 37 C.F.R 1.17(h) . Therefore the petition is **GRANTED**.

The application will be forwarded to the SPE for assignment to an examiner and for action on the merits commensurate with this decision.

Should there be any questions with regard to this letter please contact Jean F. Vollano, by letter addressed to the Director, Technology Center 1600, PO BOX 1450, ALEXANDRIA, VA 22313-1450, or by telephone at 571-272-0648 or by facsimile transmission to the general Office facsimile number.

Jean F Vollano

Jean F. Vollano.
Special Program Examiner
Technology Center 1600

UNITED STATES PATENT AND TRADEMARK OFFICE

Commissioner for Patents
United States Patent and Trademark Office
P.O. Box 1450
Alexandria, VA 22313-1450
www.uspto.gov

Chun-Pok Leung
TOWNSEND and TOWNSEND and CREW LLP
Two Embarcadero Center, 8th Floor
San Francisco, California 94111-3834

MAILED

MAR 2 3 2006

TECHNOLOGY CENTER 2100

In re Application of:
Hironobu NAKAYA
Application No. 10/928,011
Filed: August 27, 2004
For: METHOD AND SYSTEM FOR MANAGING OF JOB EXECUTION

DECISION ON PETITION TO MAKE SPECIAL

This is a decision on the renewed petition, filed on 28 July 2005 under 37 C.F.R. §102(d) and M.P.E.P. § 708.02(VIII): Accelerated Examination, to make the above-identified application special.

The petition is **GRANTED**.

M.P.E.P. § 708.02, Section VIII which sets out the prerequisites for a grantable petition for Accelerated Examination under 37 C.F.R. § 102(d) states in relevant part:

> A new application (one which has not received any examination by the examiner) may be granted special status provided that applicant (and this term includes applicant's attorney or agent) complies with each of the following items:
>
> (A) Submits a petition to make special accompanied by the fee set forth in 37 CFR 1.17(h);
>
> (B) Presents all claims directed to a single invention, or if the Office determines that all the claims presented are not obviously directed to a single invention, will make an election without traverse as a prerequisite to the grant of special status;
>
> (C) Submits a statement(s) that a pre-examination search was made, listing the field of search by class and subclass, publication, Chemical Abstracts, foreign patents, etc. A search made by a foreign patent office satisfies this requirement;
>
> (D) Submits one copy each of the references deemed most closely related to the subject matter encompassed by the claims if said references are not already of record; and
>
> (E) Submits a detailed discussion of the references, which discussion points out, with the particularity required by 37 CFR 1.111 (b) and (c), how the claimed subject matter is patentable over the references.

Applicant's submission of 28 July 2005 meets all the criteria set out above. Accordingly, the petition is **GRANTED**. The application file is being forwarded to the

Examiner for accelerated examination in accordance with M.P.E.P. § 708.02. If the application is subsequently allowed, it will be given priority for printing. See M.P.E.P. § 1309.

Vincent N. Trans
Special Program Examiner
Technology Center 2100
Computer Architecture, Software, and
Information Security
571-272-3613

UNITED STATES PATENT AND TRADEMARK OFFICE

COMMISSIONER FOR PATENTS
UNITED STATES PATENT AND TRADEMARK OFFICE
WASHINGTON, D.C. 20231
www.uspto.gov

APPLICATION NUMBER	FILING/RECEIPT DATE	FIRST NAMED APPLICANT	ATTORNEY DOCKET NUMBER
10/928,021	08/27/2004	Peter Lukens	04-11 US

CONFIRMATION NO.
2464

Varian Inc.
Legal Department
3120 Hansen Way D-102
Palo Alto CA 94304

Date Mailed: February 2, 2007

Decision Dismissing Petition under 37 CFR 1.138(c)
The declaration of express abandonment will not be recognized

This is in response to the petition under 37 CFR 1.138(c), for express abandonment to avoid publication of the above-identified application.

The petition is dismissed.

The express abandonment will **not** be recognized for the reason(s) indicated below:

1. ☐ The petition under 37 CFR 1.138(c) was not filed in sufficient time to permit the appropriate officials to recognize the abandonment and remove the application from the publication process.

2. ☐ The petition was not signed by a party authorized by 37 CFR 1.33(b)(1), (3) or (4).

3. ☐ The Application was published in compliance with 35 U.S.C. 122(b), and it is available on the USPTO web site at http://www.uspto.gov/patft/index.html.

4. ☐ Petition fee was not paid.

The application **has/will be published** as scheduled.

Telephone inquiries should be directed Office of Patent Publication, Pre-Grant Publication Division, 703-305-4283.

Barbara J. Debnam
Office of Patent Publication
Pre-Grant Publication Division

Rev. 10/01

UNITED STATES PATENT AND TRADEMARK OFFICE

UNITED STATES DEPARTMENT OF COMMERCE
United States Patent and Trademark Office
Address: COMMISSIONER FOR PATENTS
P.O. Box 1450
Alexandria, Virginia 22313-1450
www.uspto.gov

FLETCHER YODER (CHEVRON PHILLIPS)
P. O. BOX 692289
HOUSTON, TX 77069

Mail Date: 04/21/2010

Applicant	: Benjamin M. Shaw	: DECISION ON REQUEST FOR
Patent Number	: 7645841	: RECALCULATION of PATENT
Issue Date	: 01/12/2010	: TERM ADJUSTMENT IN VIEW
Appliction No	: 10/928,047	: OF WYETH AND NOTICE OF INTENT TO
Filed	: 08/27/2004	: ISSUE CERTIFICATE OF CORRECTION
		:

The Request for Recalculation is **GRANTED** to the extent indicated.

The patent term adjustment has been determined to be **383** days. The USPTO will *sua sponte* issue a certificate of correction reflecting the amount of PTA days determined by the recalculation.

Prior to the issuance of the certificate of correction, the USPTO will afford patentee an opportunity to be heard and request reconsideration. Accordingly, patentee has **one month or thirty (30) days**, whichever is longer, to file a request for reconsideration of this patent term adjustment calculation. See 35 U.S.C. 154(b)(3)(B)(ii) and 37 CFR 1.322(a)(4). No extensions of time will be granted under 37 CFR 1.136.

Patentee should use document code PET.OP if electronically filing a request for reconsideration of this patent term adjustment calculation. The patentee must also include the information required by 37 CFR 1.705(b)(2) and the fee required by 37 CFR 1.18(e). If patentee does not file a timely request for reconsideration of this patent term adjustment calculation including the information required by 37 CFR 1.705(b)(2) and the fee required by 37 CFR 1.18(e), the USPTO will issue a certificate of correction reflecting the PTA determination noted above.

Patentee should be aware that in order to preserve the right to review in the United States District Court for the District of Columbia of the USPTO patent term adjustment determination, patentee must ensure that he or she also take the steps required under 35 U.S.C. 154(b)(4)(A) in a timely manner. Nothing in the request for recalculation should be construed as providing an alternative time frame for commencing a civil action under 35 U.S.C. 154(b)(4)(A).

Any questions concerning this decision should be directed to the Office of Patent Legal Administration at 571-272-7702.

UNITED STATES PATENT AND TRADEMARK OFFICE

UNITED STATES DEPARTMENT OF COMMERCE
United States Patent and Trademark Office
Address: COMMISSIONER FOR PATENTS
P.O. Box 1450
Alexandria, Virginia 22313-1450
www.uspto.gov

HOWARD & HOWARD ATTORNEYS PLLC
450 West Fourth Street
Royal Oak, MI 48067

Mail Date: 04/21/2010

Applicant	: Brian Kinross	: DECISION ON REQUEST FOR
Patent Number	: 7584574	: RECALCULATION of PATENT
Issue Date	: 09/08/2009	: TERM ADJUSTMENT IN VIEW
Appliction No	: 10/928,048	: OF WYETH AND NOTICE OF INTENT TO
Filed	: 08/27/2004	: ISSUE CERTIFICATE OF CORRECTION
		:

The Request for Recalculation is **GRANTED** to the extent indicated.

The patent term adjustment has been determined to be **510** days. The USPTO will *sua sponte* issue a certificate of correction reflecting the amount of PTA days determined by the recalculation.

Prior to the issuance of the certificate of correction, the USPTO will afford patentee an opportunity to be heard and request reconsideration. Accordingly, patentee has **one month or thirty (30) days**, whichever is longer, to file a request for reconsideration of this patent term adjustment calculation. See 35 U.S.C. 154(b)(3)(B)(ii) and 37 CFR 1.322(a)(4). No extensions of time will be granted under 37 CFR 1.136.

Patentee should use document code PET.OP if electronically filing a request for reconsideration of this patent term adjustment calculation. The patentee must also include the information required by 37 CFR 1.705(b)(2) and the fee required by 37 CFR 1.18(e). If patentee does not file a timely request for reconsideration of this patent term adjustment calculation including the information required by 37 CFR 1.705(b)(2) and the fee required by 37 CFR 1.18(e), the USPTO will issue a certificate of correction reflecting the PTA determination noted above.

Patentee should be aware that in order to preserve the right to review in the United States District Court for the District of Columbia of the USPTO patent term adjustment determination, patentee must ensure that he or she also take the steps required under 35 U.S.C. 154(b)(4)(A) in a timely manner. Nothing in the request for recalculation should be construed as providing an alternative time frame for commencing a civil action under 35 U.S.C. 154(b)(4)(A).

Any questions concerning this decision should be directed to the Office of Patent Legal Administration at 571-272-7702.

UNITED STATES PATENT AND TRADEMARK OFFICE

UNITED STATES DEPARTMENT OF COMMERCE
United States Patent and Trademark Office
Address: COMMISSIONER FOR PATENTS
P.O. Box 1450
Alexandria, Virginia 22313-1450
www.uspto.gov

ALSTON & BIRD LLP
BANK OF AMERICA PLAZA
101 SOUTH TRYON STREET, SUITE 4000
CHARLOTTE, NC 28280-4000

Mail Date: 04/21/2010

Applicant	: Yoshio Yamada	: DECISION ON REQUEST FOR
Patent Number	: 7628029	: RECALCULATION of PATENT
Issue Date	: 12/08/2009	: TERM ADJUSTMENT IN VIEW
Appliction No	: 10/928,050	: OF WYETH AND NOTICE OF INTENT TO
Filed	: 08/27/2004	: ISSUE CERTIFICATE OF CORRECTION
		:

The Request for Recalculation is **GRANTED** to the extent indicated.

The patent term adjustment has been determined to be **1503** days. The USPTO will *sua sponte* issue a certificate of correction reflecting the amount of PTA days determined by the recalculation.

Prior to the issuance of the certificate of correction, the USPTO will afford patentee an opportunity to be heard and request reconsideration. Accordingly, patentee has **one month or thirty (30) days**, whichever is longer, to file a request for reconsideration of this patent term adjustment calculation. See 35 U.S.C. 154(b)(3)(B)(ii) and 37 CFR 1.322(a)(4). No extensions of time will be granted under 37 CFR 1.136.

Patentee should use document code PET.OP if electronically filing a request for reconsideration of this patent term adjustment calculation. The patentee must also include the information required by 37 CFR 1.705(b)(2) and the fee required by 37 CFR 1.18(e). If patentee does not file a timely request for reconsideration of this patent term adjustment calculation including the information required by 37 CFR 1.705(b)(2) and the fee required by 37 CFR 1.18(e), the USPTO will issue a certificate of correction reflecting the PTA determination noted above.

Patentee should be aware that in order to preserve the right to review in the United States District Court for the District of Columbia of the USPTO patent term adjustment determination, patentee must ensure that he or she also take the steps required under 35 U.S.C. 154(b)(4)(A) in a timely manner. Nothing in the request for recalculation should be construed as providing an alternative time frame for commencing a civil action under 35 U.S.C. 154(b)(4)(A).

Any questions concerning this decision should be directed to the Office of Patent Legal Administration at 571-272-7702.

UNITED STATES PATENT AND TRADEMARK OFFICE

Commissioner for Patents
United States Patent and Trademark Office
P.O. Box 1450
Alexandria, VA 22313-1450
www.uspto.gov

HUTCHISON & MASON PLLC
PO BOX 31686
RALEIGH NC 27612

COPY MAILED

AUG 1 1 2005

OFFICE OF PETITIONS

In re Application of
Joly, et al.
Application No.: 10/928,057
Filed: September 2, 2004
Attorney Docket No. CREG.10002

DECISION GRANTING
PETITION

This is a decision on the petition under 37 CFR 1.10(c), filed April 1, 2005 (certificate of mailing date March 29, 2005), requesting that the above-identified application be accorded a filing date of June 2, 2004, instead of the presently accorded date of September 2, 2004.

Petitioners allege that the application was deposited in "Express Mail" service with the U. S. Postal Service, on June 2, 2004. In support, petitioners provided a copy of the Express Mail label, receipt no. EV171049367US, showing a Date-In of 6/2/04 and a postal date stamp of JUN 2 2004. The same Express Mail receipt number was referred to in the original application transmittal letter submitted with the original filing. Petitioners request that the application be accorded a filing date of June 2, 2004.

The Office considers the date the paper or fee is shown to have been deposited as "Express Mail" to be the "Date In" on the Express Mail label, MPEP 513. That is the date that verifies that the package was actually mailed. In view of the above, the evidence is convincing that the application was deposited as "Express Mail" with the US Postal Service on June 2, 2004.

In view of the above, the petition is granted.

As this is a feeless petition, no petition fee has been or will be charged.

The application will be returned to the Office of Initial Patent Examination for further processing with a filing date of **June 2, 2004**.

Telephone inquiries concerning this matter should be directed to the undersigned at (571) 272-3230.

E. Shirene Willis

E. Shirene Willis
Petitions Attorney
Office of Petitions
Office of the Deputy Commissioner
for Patent Examination Policy

UNITED STATES PATENT AND TRADEMARK OFFICE

Commissioner for Patents
United States Patent and Trademark Office
P.O. Box 1450
Alexandria, VA 22313-1450
www.uspto.gov

NOVAK DRUCE AND QUIGG LLP (Volvo)
1000 LOUISIANA STREET
FIFTY-THIRD FLOOR
HOUSTON TX 77002

COPY MAILED
SEP 15 2008

In re Application of	:	
Mats DANIELSSON	:	
Application No. 10/928,098	:	DECISION ON PETITION
Filed: August 30, 2004	:	
Attorney Docket No. 6730.066.PCUS00	:	

This is a decision on the petition under the unintentional provisions of 37 CFR 1.137(b), filed May 02, 2008, to revive the above-identified application.

The petition is **GRANTED**.

This application became abandoned for failure to timely pay the issue and publication fees on or before April 14, 2008, as required by the Notice of Allowance and Fee(s) Due, mailed January 14, 2008, which set a statutory period for reply of three (3) months. Accordingly, the application became abandoned on April 15, 2008.

The petition satisfies the requirements of 37 CFR 1.137(b) in that petitioner has supplied (1) the reply in the form of payment of the issue fee of $1,440.00 and publication fee of $300.00; (2) the petition fee of $1,540.00; and (3) a proper statement of unintentional delay. Accordingly, the issue and publication fee payments are accepted as being unintentionally delayed.

Telephone inquiries concerning this decision should be directed to the undersigned at (571) 272-4231.

This application is being referred to Office of Data Management.

Michelle R. Eason
Paralegal Specialist
Office of Petitions

OIPE IAP81
DEC 2 4 2008
PATENT & TRADEMARK OFFICE

Patent
Attorney's Docket No. 1010751-000076

IN THE UNITED STATES PATENT AND TRADEMARK OFFICE

In re Patent of	)	
Uwe Keller et al.	)	
Patent No.: 7,387,188	)	Mail Stop: OFFICE OF PETITIONS
Issued: June 17, 2008	)	
Application No.: 10/928,141	)	
Filed: August 30, 2004	)	
Title: SOUND ABSORBER	)	

REQUEST FOR CERTIFICATE OF CORRECTION

Certificate
DEC 3 0 2008
of Correction

Commissioner for Patents
P.O. Box 1450
Alexandria, VA 22313-1450

Sir:

Issuance of a Certificate of Correction for the above-captioned patent is respectfully requested in accordance with the accompanying Form PTO-1050 (submitted in duplicate).

☒ The requisite government fee of $ 100:

- ☐ is submitted herewith;
- ☒ is authorized to be charged to Deposit Account No. 02-4800; or
- ☐ charge to credit card. Form PTO-2038 is attached.

☐ It is believed that payment of a fee is unnecessary.
[Enter description of documents being submitted]

The Director is hereby authorized to charge any appropriate fees under 37 C.F.R. § 1.20(a) that may be required by this paper, and to credit any overpayment, to Deposit Account No. 02-4800. This paper is submitted in duplicate.

Respectfully submitted,

BUCHANAN INGERSOLL & ROONEY PC

Date: December 24, 2008

By: 48360
Patrick C. Keane
Registration No. 32858

P.O. Box 1404
Alexandria, VA 22313-1404
703 836 6620

12/29/2008 SDENBOB4 00000072 024800 7387188
01 FC:1811 100.00 DA

OIPE IAP81
DEC 24 2008
PATENT & TRADEMARK OFFICE

Patent
Attorney Docket No. 1010751-000076

IN THE UNITED STATES PATENT AND TRADEMARK OFFICE

In re Patent Application of	)	
	)	
Uwe Keller et al.	)	Mail Stop: OFFICE OF PETITIONS
	)	
Patent No: 7,387,188	)	
	)	
Issue Date: June 17, 2008	)	
	)	
Application No.: 10/928,141	)	
	)	
Filed: August 30, 2004	)	
	)	
For: SOUND ABSORBER	)	

PETITION TO CORRECT ASSIGNEE UNDER 37 CFR 3.81(b)

Commissioner for Patents
P.O. Box 1450
Alexandria, VA 22313-1450

Sir:

Patentees petition for issuance of a Certificate of Correction listing the correct Assignee for the above-captioned patent. Please be advised that the Assignee's address submitted on the PTOL-85 filed on May 14, 2008, was incorrect. Applicants submit herewith the following:

1. The processing fee as set forth in 37 C.F.R. § 1.17(i) in the amount of $130.00 is enclosed herewith;

2. Applicants request that the above-identified patent be corrected to state the correct address of the Assignee: Borgwarner Inc., Auburn Hills, MI (US);

3. The Assignment of the above-identified patent was submitted for recordation before the issuance thereof. A copy of the Notice of Recordation of Assignment Document recorded on May 19, 2006, at Reel 017913, Frame 0574 is submitted herewith; and

4. A Request for a Certificate of Correction under 37 C.F.R. § 1.323 accompanied by the fee set forth in 37 C.F.R. § 1.20(a).

The Director is hereby authorized to charge any additional fees that may be required, and to credit any overpayment, to Deposit Account No. 02-4800.

Respectfully submitted,

BUCHANAN INGERSOLL & ROONEY PC

Date: December 24, 2008 By: 48360

Patrick C. Keane
Registration No. 32858

P.O. Box 1404
Alexandria, VA 22313-1404
703 836 6620

PTO/SB/44 (08-00) (Also Form PTO-1050)

UNITED STATES PATENT AND TRADEMARK OFFICE

CERTIFICATE OF CORRECTION

PATENT NO. : 7,387,188
DATED : June 17, 2008
INVENTOR(S) : Uwe Keller et al.

It is certified that error appears in the above-identified patent and that said Letters Patent is hereby corrected as shown below:

Item 73 (Assignee): change "Borgwarner Inc., Chicago, IL (US)" to --Borgwarner Inc., Auburn Hills, MI (US)--

---

MAILING ADDRESS OF SENDER:

PATENT NO. 7,387,188

BUCHANAN INGERSOLL & ROONEY PC
P.O. Box 1404
Alexandria, VA 22313-1404

No. of additional copies
3

SEND TO: Attention Certificate of Corrections Branch, Commissioner for Patents, P.O. Box 1450, Alexandria, VA 22313-1450

OIPE IAP81
DEC 2 4 2008
PATENT & TRADEMARK OFFICE

BUCHANAN INGERSOLL & ROONEY P
JUL 19 2006
DOCKETED 7/20/06
1010751-000076

UNITED STATES PATENT AND TRADEMARK OFFICE

UNDER SECRETARY OF COMMERCE FOR INTELLECTUAL PROPERTY AND
DIRECTOR OF THE UNITED STATES PATENT AND TRADEMARK OFFICE

103243472A

JULY 12, 2006

PTAS

BUCHANAN, INGERSOLL & ROONEY PC
POST OFFICE BOX 1404
ALEXANDRIA, VA 22313-1404

UNITED STATES PATENT AND TRADEMARK OFFICE
NOTICE OF RECORDATION OF ASSIGNMENT DOCUMENT

THE ENCLOSED DOCUMENT HAS BEEN RECORDED BY THE ASSIGNMENT DIVISION OF THE U.S. PATENT AND TRADEMARK OFFICE. A COMPLETE MICROFILM COPY IS AVAILABLE AT THE ASSIGNMENT SEARCH ROOM ON THE REEL AND FRAME NUMBER REFERENCED BELOW.

PLEASE REVIEW ALL INFORMATION CONTAINED ON THIS NOTICE. THE INFORMATION CONTAINED ON THIS RECORDATION NOTICE REFLECTS THE DATA PRESENT IN THE PATENT AND TRADEMARK ASSIGNMENT SYSTEM. IF YOU SHOULD FIND ANY ERRORS OR HAVE QUESTIONS CONCERNING THIS NOTICE, YOU MAY CONTACT THE EMPLOYEE WHOSE NAME APPEARS ON THIS NOTICE AT 571-272-3350. PLEASE SEND REQUEST FOR CORRECTION TO: U.S. PATENT AND TRADEMARK OFFICE, MAIL STOP: ASSIGNMENT SERVICES BRANCH, P.O. BOX 1450, ALEXANDRIA, VA 22313.

RECORDATION DATE: 05/19/2006

REEL/FRAME: 017913/0574
NUMBER OF PAGES: 4

BRIEF: CHANGE OF ADDRESS FOR BORGARNER INC., PREVIOUSLY RECORDED ON 3/22/2005 AT REEL/FRAME: 015947/0877
DOCKET NUMBER: 1010751-000076

ASSIGNOR:
KELLER, UWE
DOC DATE: 01/10/2005

ASSIGNOR:
LOWE, HANS-JOACHIM
DOC DATE: 01/04/2005

ASSIGNOR:
VON DER HAGEN, JOACHIM
DOC DATE: 01/04/2005

ASSIGNOR:
METZ, DIETMAR
DOC DATE: 01/21/2005

ASSIGNOR:
STONNER, HELMUT
DOC DATE: 01/21/2005

NAU
JUL 21 2006

ASSIGNEE:
VERITAS AG
STETTINER STRASSE 1-9
D-63571 GELNHAUSEN, GERMANY

ASSIGNEE:
BORGWARNER INC.
3850 HAMLIN ROAD
AUBURN HILLS, MICHIGAN 48326-2872

SERIAL NUMBER: 10928141
PATENT NUMBER:
TITLE: SOUND ABSORBER

FILING DATE: 08/30/2004
ISSUE DATE:

SHAREILL COLES, EXAMINER
ASSIGNMENT SERVICES BRANCH
PUBLIC RECORDS DIVISION

UNITED STATES PATENT AND TRADEMARK OFFICE

Commissioner for Patents
United States Patent and Trademark Office
P.O. Box 1450
Alexandria, VA 22313-1450
www.uspto.gov

DR. MARK M. FRIEDMAN
C/O BILL POLKINGHORN – DISCOVERY DISPATCH
9003 FLORIN WAY
UPPER MARLBORO, MD 20772

COPY MAILED

JAN 3 1 2008

OFFICE OF PETITIONS

In re Application of :
Ehud Nagler :
Application No. 10/928,155 : ON PETITION
Filed: August 30, 2004 :
Attorney Docket No. 700/49 :

This is a decision on the petition under 37 CFR 1.137(b), filed August 15, 2007, to revive the above-identified application.

The petition is **DISMISSED.**

Any request for reconsideration of this decision must be submitted within TWO (2) MONTHS from the mail date of this decision. Extensions of time under 37 CFR 1.136(a) are permitted. The reconsideration request should include a cover letter entitled "**Renewed Petition under 37 CFR 1.137(b)**." This is **not** final agency action within the meaning of 5 U.S.C. § 704.

A grantable petition under 37 CFR 1.137(b) must be accompanied by: (1) the required reply, unless previously filed; (2) the petition fee as set forth in 37 CFR 1.17(m); (3) a statement that the entire delay in filing the required reply from the due date for the reply until the filing of a grantable petition pursuant to 37 CFR 1.137(b) was unintentional; and (4) any terminal disclaimer (and fee as set forth in 37 CFR 1.20(d)) required by 37 CFR 1.137(c). Where there is a question as to whether either the abandonment or the delay in filing a petition under 37 CFR 1.137 was unintentional, the Commissioner may require additional information. See MPEP 711.03(c)(III)(C) and (D). The instant petition lack(s) item(s) (1).

The application became abandoned for failure to timely file a reply within the meaning of 37 CFR 1.113 to the final Office action of August 30, 2006. The proposed reply required for consideration of a petition to revive must be a Notice of Appeal (and appeal fee required by 37 CFR 41.20(b)(2)), an amendment that *prima facie* places the application in condition for allowance, a Request for Continued Examination (RCE) and submission (37 CFR 1.114), or the filing of a continuing application under 37 CFR 1.53(b). *See* MPEP 711.03(c)(III)(A)(2). Since the amendment submitted does not *prima facie* place the application in condition for allowance, the reply required must be a Notice of Appeal (and appeal fee), RCE, or the filing of a continuing application under 37 CFR 1.53(b).

Further correspondence with respect to this matter should be addressed as follows:

By mail: Mail Stop PETITION
Commissioner for Patents
Post Office Box 1450
Alexandria, VA 22313-1450

By hand: Customer Service Window
Randolph Building
401 Dulany Street
Alexandria, VA 22314

By facsimile: (571) 273-8300
ATTN: Office of Petitions

Telephone inquiries concerning this decision should be directed to the undersigned at (571) 272-3210.

Irvin Dingle
Petitions Examiner
Office of Petitions

Attachment: Advisory Action

Advisory Action Before the Filing of an Appeal Brief	Application No. 10/928,155	Applicant(s) NAGLER, EHUD	
	Examiner Nathan Wiehe	Art Unit 3745	

--The MAILING DATE of this communication appears on the cover sheet with the correspondence address --

THE REPLY FILED 15 August 2007 FAILS TO PLACE THIS APPLICATION IN CONDITION FOR ALLOWANCE.

1. ☒ The reply was filed after a final rejection, but prior to or on the same day as filing a Notice of Appeal. To avoid abandonment of this application, applicant must timely file one of the following replies: (1) an amendment, affidavit, or other evidence, which places the application in condition for allowance; (2) a Notice of Appeal (with appeal fee) in compliance with 37 CFR 41.31; or (3) a Request for Continued Examination (RCE) in compliance with 37 CFR 1.114. The reply must be filed within one of the following time periods:
   a) ☒ The period for reply expires 3 months from the mailing date of the final rejection.
   b) ☐ The period for reply expires on: (1) the mailing date of this Advisory Action, or (2) the date set forth in the final rejection, whichever is later. In no event, however, will the statutory period for reply expire later than SIX MONTHS from the mailing date of the final rejection.

   Examiner Note: If box 1 is checked, check either box (a) or (b). ONLY CHECK BOX (b) WHEN THE FIRST REPLY WAS FILED WITHIN TWO MONTHS OF THE FINAL REJECTION. See MPEP 706.07(f).

Extensions of time may be obtained under 37 CFR 1.136(a). The date on which the petition under 37 CFR 1.136(a) and the appropriate extension fee have been filed is the date for purposes of determining the period of extension and the corresponding amount of the fee. The appropriate extension fee under 37 CFR 1.17(a) is calculated from: (1) the expiration date of the shortened statutory period for reply originally set in the final Office action; or (2) as set forth in (b) above, if checked. Any reply received by the Office later than three months after the mailing date of the final rejection, even if timely filed, may reduce any earned patent term adjustment. See 37 CFR 1.704(b).

NOTICE OF APPEAL

2. ☐ The Notice of Appeal was filed on _____. A brief in compliance with 37 CFR 41.37 must be filed within two months of the date of filing the Notice of Appeal (37 CFR 41.37(a)), or any extension thereof (37 CFR 41.37(e)), to avoid dismissal of the appeal. Since a Notice of Appeal has been filed, any reply must be filed within the time period set forth in 37 CFR 41.37(a).

AMENDMENTS

3. ☒ The proposed amendment(s) filed after a final rejection, but prior to the date of filing a brief, will not be entered because
   (a) ☐ They raise new issues that would require further consideration and/or search (see NOTE below);
   (b) ☐ They raise the issue of new matter (see NOTE below);
   (c) ☒ They are not deemed to place the application in better form for appeal by materially reducing or simplifying the issues for appeal; and/or
   (d) ☒ They present additional claims without canceling a corresponding number of finally rejected claims.
   NOTE: *See Continuation Sheet*. (See 37 CFR 1.116 and 41.33(a)).
4. ☐ The amendments are not in compliance with 37 CFR 1.121. See attached Notice of Non-Compliant Amendment (PTOL-324).
5. ☐ Applicant's reply has overcome the following rejection(s): _____.
6. ☐ Newly proposed or amended claim(s) _____ would be allowable if submitted in a separate, timely filed amendment canceling the non-allowable claim(s).
7. ☒ For purposes of appeal, the proposed amendment(s): a) ☒ will not be entered, or b) ☐ will be entered and an explanation of how the new or amended claims would be rejected is provided below or appended.
   The status of the claim(s) is (or will be) as follows:
   Claim(s) allowed: _____.
   Claim(s) objected to: _____.
   Claim(s) rejected: _____.
   Claim(s) withdrawn from consideration: _____.

AFFIDAVIT OR OTHER EVIDENCE

8. ☐ The affidavit or other evidence filed after a final action, but before or on the date of filing a Notice of Appeal will not be entered because applicant failed to provide a showing of good and sufficient reasons why the affidavit or other evidence is necessary and was not earlier presented. See 37 CFR 1.116(e).
9. ☐ The affidavit or other evidence filed after the date of filing a Notice of Appeal, but prior to the date of filing a brief, will not be entered because the affidavit or other evidence failed to overcome all rejections under appeal and/or appellant fails to provide a showing a good and sufficient reasons why it is necessary and was not earlier presented. See 37 CFR 41.33(d)(1).
10. ☐ The affidavit or other evidence is entered. An explanation of the status of the claims after entry is below or attached.

REQUEST FOR RECONSIDERATION/OTHER

11. ☐ The request for reconsideration has been considered but does NOT place the application in condition for allowance because: _____.
12. ☐ Note the attached Information Disclosure Statement(s). (PTO/SB/08) Paper No(s). _____
13. ☐ Other: _____.

EDWARD K. LOOK
SUPERVISORY PATENT EXAMINER
TECHNOLOGY CENTER 3700

12/10/07

Continuation of 3. NOTE: The amendment adds a new claim without cancelling any of the finally rejected claims. Therefore, it does not reduce or simplify the issued for appeal .

UNITED STATES PATENT AND TRADEMARK OFFICE

Commissioner for Patents
United States Patent and Trademark Office
P.O. Box 1450
Alexandria, VA 22313-1450
www.uspto.gov

DR. MARK M. FRIEDMAN
C/O BILL POLKINGHORN – DISCOVERY DISPATCH
9003 FLORIN WAY
UPPER MARLBORO, MD 20772

COPY MAILED

JUN 12 2008

OFFICE OF PETITIONS

In re Application of	:	
Ehud Nagler	:	
Application No. 10/928,155	:	ON PETITION
Filed: August 30, 2004	:	
Attorney Docket No. 733/49	:	

This is a decision on the renewed petition under the unintentional provisions of 37 CFR 1.137(b), filed February 13, 2008, to revive the above-identified application.

The petition is **GRANTED**.

The petition satisfies the requirements of 37 CFR 1.137(b) in that petitioner has supplied (1) the reply in the form of a Request for Continued Examination (RCE) and fee of $405 and the submission required by 37 CFR 1.114; (2) the petition fee of $750; and (3) a proper statement of unintentional delay.

Telephone inquiries concerning this decision should be directed to the undersigned at (571) 272-3210.

This application is being referred to Technology Center AU 3745 for processing of the RCE and for appropriate action by the Examiner in the normal course of business on the amendment submitted in accordance with 37 CFR 1.114.

Irvin Dingle
Petition Examiner
Office of Petitions

UNITED STATES PATENT AND TRADEMARK OFFICE

Commissioner for Patents
United States Patent and Trademark Office
P.O. Box 1450
Alexandria, VA 22313-1450
www.uspto.gov

MAILED

MAR 05 2010

OFFICE OF PETITIONS

DR. MARK M. FRIEDMAN
C/O BILL POLKINGHORN – DISCOVERY DISPATCH
9003 FLORIN WAY
UPPER MARLBORO, MD 20772

In re Application of :
Ehud Nagler :
Application No. 10/928,155 : ON PETITION
Filed: August 30, 2004 :
Attorney Docket No. 733/49 :

This is a decision on the petition under 37 CFR 1.137(b), filed December 29, 2009, to revive the above-identified application.

The petition is **GRANTED.**

The above-identified application became abandoned for failure to reply in a timely manner to the non-final Office action mailed July 8, 2008, which set a shortened statutory period for reply of three (3) months. No extension of time under the provisions of 37 CFR 1.136(a) was obtained. Accordingly, the above-identified application became abandoned on October 9, 2008.

Telephone inquiries concerning this decision should be directed to Irvin Dingle at (571) 272-3210.

This matter is being referred to Technology Center AU 3745 for further processing.

Irvin Dingle
Petitions Examiner
Office of Petitions

PTO/SB/44 (09-07)
Approved for use through 08/31/2010. OMB 0651-0033
U.S. Patent and Trademark Office; U.S. DEPARTMENT OF COMMERCE
Under the Paperwork Reduction Act of 1995, no persons are required to respond to a collection of information unless it displays a valid OMB control number.
(Also Form PTO-1050)

UNITED STATES PATENT AND TRADEMARK OFFICE
CERTIFICATE OF CORRECTION

PATENT NO. : 7,325,636 B2

APPLICATION NO.: 10/928,167

ISSUE DATE : February 5, 2008

INVENTOR(S) : Yeoman, et al.

It is certified that an error appears or errors appear in the above-identified patent and that said Letters Patent is hereby corrected as shown below:

Please correct the claim as follows:
Column 10, lines 46–54, delete Claim 10 and insert - -

10. The system of claim 9, including
a first hydrostatic transmission associated with the right wheel and configured to drive the right wheel;
a first hydrostatic transmission controller configured to control the first hydrostatic transmission;
a second hydrostatic transmission associated with the left wheel and configured to drive the left wheel; and
a second hydrostatic transmission controller configured to control the second hydrostatic transmission,
wherein the first and second hydrostatic transmission controllers are configured to respectively receive the first and second wheel speed commands to drive the right and left wheels. - -.

MAILING ADDRESS OF SENDER (Please do not use customer number below):
Caterpillar Inc.
Intellectual Property Dept.
AH9510
100 N.E. Adams Street
PEORIA, IL 61629-9510

This collection of information is required by 37 CFR 1.322, 1.323, and 1.324. The information is required to obtain or retain a benefit by the public which is to file (and by the USPTO to process) an application. Confidentiality is governed by 35 U.S.C. 122 and 37 CFR 1.14. This collection is estimated to take 1.0 hour to complete, including gathering, preparing, and submitting the completed application form to the USPTO. Time will vary depending upon the individual case. Any comments on the amount of time you require to complete this form and/or suggestions for reducing this burden, should be sent to the Chief Information Officer, U.S. Patent and Trademark Office, U.S. Department of Commerce, P.O. Box 1450, Alexandria, VA 22313-1450. DO NOT SEND FEES OR COMPLETED FORMS TO THIS ADDRESS. **SEND TO: Attention Certificate of Corrections Branch, Commissioner for Patents, P.O. Box 1450, Alexandria, VA 22313-1450.**

If you need assistance in completing the form, call 1-800-PTO-9199 and select option 2.

SPE RESPONSE FOR CERTIFICATE OF CORRECTION

Paper No.: _____

DATE : 9/26/08

TO SPE OF : ART UNIT 3611

SUBJECT : Request for Certificate of Correction for Appl. No.: 10928167 Patent No.: 7325636

Please respond to this request for a certificate of correction within 7 days.

FOR IFW FILES:

Please review the requested changes/corrections as shown in the **COCIN** document(s) in the IFW application image. No new matter should be introduced, nor should the scope or meaning of the claims be changed.

Please complete the response (see below) and forward the completed response to scanning using document code **COCX**.

FOR PAPER FILES:

Please review the requested changes/corrections as shown in the attached certificate of correction. Please complete this form (see below) and forward it with the file to:

Certificates of Correction Branch (CofC)
South Tower - 9A22
Palm Location 7580

DI
Certificates of Correction Branch

703-308-9390 ext. _____

Thank You For Your Assistance

The request for issuing the above-identified correction(s) is hereby:
Note your decision on the appropriate box.

- ☒ **Approved** — **All** changes apply.
- ☐ **Approved in Part** — Specify below which changes **do not** apply.
- ☐ **Denied** — State the reasons for denial below.

Comments: _____

APPROVED.

/Paul N. Dickson/ 3611

SPE **Art Unit**

UNITED STATES PATENT AND TRADEMARK OFFICE

Commissioner for Patents
United States Patent and Trademark Office
P.O. Box 1450
Alexandria, VA 22313-1450
www.uspto.gov

NIXON & VANDERHYE, PC
901 NORTH GLEBE ROAD, 11TH FLOOR
ARLINGTON, VA 22203

COPY MAILED
JUN 0 6 2006
OFFICE OF PETITIONS

In re Application of	:	
Kuk-Bin Lee	:	
Application No. 10/928,189	:	DECISION ON PETITION
Filed: August 30, 2004	:	TO WITHDRAW
Attorney Docket No. 3260-23	:	FROM RECORD
	:	

This is a decision on the Request to Withdraw as attorney or agent of record under 37 C.F.R. § 1.36(b), filed March 22, 2006.

The request is **NOT APPROVED** as moot.

A review of the file record indicates that the power of attorney to customer No. 23117 has been revoked by the applicant of the patent application on March 22, 2006. Accordingly, the request to withdraw under 37 C.F.R. § 1.36(b) is moot.

All future communications from the Office will continue to be directed to the below-listed address until otherwise notified by applicant.

This application is being referred to Technology Center AU 3743.

Telephone inquires concerning this decision should be directed to Wan Laymon at 571-272-3220.

Denise Pothier
Petitions Examiner
Office of Petitions

cc: ROSENBERG KLEIN & LEE
3458 ELLICOTT CENTER DRIVE-SUITE 101
ELLICOTT CITY, MD 21043

UNITED STATES PATENT AND TRADEMARK OFFICE

UNITED STATES DEPARTMENT OF COMMERCE
United States Patent and Trademark Office
Address: COMMISSIONER FOR PATENTS
P.O. Box 1450
Alexandria, Virginia 22313-1450
www.uspto.gov

APPLICATION NUMBER	FILING OR 371 (c) DATE	FIRST NAMED APPLICANT	ATTY. DOCKET NO./TITLE
10/928,189	08/30/2004	Kuk-Bin Lee	3260-23

CONFIRMATION NO. 4684

OC000000019121604

04586
ROSENBERG, KLEIN & LEE
3458 ELLICOTT CENTER DRIVE-SUITE 101
ELLICOTT CITY, MD 21043

Date Mailed: 06/06/2006

NOTICE OF ACCEPTANCE OF POWER OF ATTORNEY

This is in response to the Power of Attorney filed 03/22/2006.

The Power of Attorney in this application is accepted. Correspondence in this application will be mailed to the above address as provided by 37 CFR 1.33.

Wan Laymon

WAN LAYMON
OP (571) 272-3220

ATTORNEY/APPLICANT COPY

UNITED STATES PATENT AND TRADEMARK OFFICE

UNITED STATES DEPARTMENT OF COMMERCE
United States Patent and Trademark Office
Address: COMMISSIONER FOR PATENTS
P.O. Box 1450
Alexandria, Virginia 22313-1450
www.uspto.gov

APPLICATION NUMBER	FILING OR 371 (c) DATE	FIRST NAMED APPLICANT	ATTY. DOCKET NO./TITLE
10/928,189	08/30/2004	Kuk-Bin Lee	3260-23

CONFIRMATION NO. 4684

OC000000019121515

23117
NIXON & VANDERHYE, PC
901 NORTH GLEBE ROAD, 11TH FLOOR
ARLINGTON, VA 22203

Date Mailed: 06/06/2006

NOTICE REGARDING CHANGE OF POWER OF ATTORNEY

This is in response to the Power of Attorney filed 03/22/2006.

- The Power of Attorney to you in this application has been revoked by the applicant. Future correspondence will be mailed to the new address of record(37 CFR 1.33).

Wan Laymon

WAN LAYMON
OP (571) 272-3220

FORMER ATTORNEY/AGENT COPY

UNITED STATES PATENT AND TRADEMARK OFFICE

Commissioner for Patents
United States Patent and Trademark Office
P.O. Box 1450
Alexandria, VA 22313-1450
www.uspto.gov

COPY MAILED

JUN 2 2 2009

OFFICE OF PETITIONS

BSH HOME APPLIANCES CORPORATION
INTELLECTUAL PROPERTY DEPARTMENT
100 BOSCH BOULEVARD
NEW BERN NC 28562

In re Application of :
Jochen KLEMM et al. :
Application No. 10/928,220 : DECISION ON PETITION
Filed: August 27, 2004 :
Attorney Docket No. :
2002P00358WOUS

This is a decision on the petition under the unintentional provisions of 37 CFR 1.137(b), filed May 12, 2009, to revive the above-identified application.

The petition is **DISMISSED**.

Any request for reconsideration of this decision must be submitted within TWO (2) MONTHS from the mail date of this decision. Extensions of time under 37 CFR 1.136(a) are permitted. The reconsideration request should include a cover letter entitled "Renewed Petition under 37 CFR 1.137(b)." This is **not** a final agency action within the meaning of 5 U.S.C. § 704.

The application became abandoned for failure to timely reply within the meaning of 37 CFR 1.113 to the final Office action, mailed October 19, 2006, which set a shortened statutory period for reply of three (3) months. No extensions of time under the provisions of 37 CFR 1.136(a) were obtained. Accordingly, the application became abandoned on January 20, 2007.

A grantable petition under 37 CFR 1.137(b) must be accompanied by: (1) the required reply, unless previously filed; (2) the petition fee as set forth in 37 CFR 1.17(m); (3) a statement that the entire delay in filing the required reply from the due date for the reply until the filing of a grantable petition pursuant to 37 CFR 1.137(b) was unintentional; and (4) any terminal

disclaimer (and fee as set forth in 37 CFR 1.20(d)) required by 37 CFR 1.137(d). Where there is a question as to whether either the abandonment or the delay in filing a petition under 37 CFR 1.137 was unintentional, the Director may require additional information. *See* MPEP 711.03(c)(II)(C) and (D). The instant petition lacks item (3).

There are three periods to be considered during the evaluation of a petition under 37 CFR 1.137(b):

(1) the delay in reply that originally resulted in the abandonment;

(2) the delay in filing an initial petition pursuant to 37 CFR 1.137(b) to revive the application; and

(3) the delay in filing a grantable petition pursuant to 37 CFR 1.137(b) to revive the application.

Currently, the delay has not been shown to the satisfaction of the Director to be unintentional for periods (1) and (2).

As to Period (1):

The patent statute at 35 U.S.C. § 41(a)(7) authorizes the Director to revive an "unintentionally abandoned application." The legislative history of Public Law 97-247 reveals that the purpose of 35 U.S.C. § 41(a)(7) is to permit the Office to have more discretion than in 35 U.S.C. §§ 133 or 151 to revive abandoned applications in appropriate circumstances, but places a limit on this discretion, stating that "[u]nder this section a petition accompanied by either a fee of $500 or a fee of $50 **would not be granted where the abandonment** or the failure to pay the fee for issuing the patent **was intentional** as opposed to being unintentional or unavoidable." [emphasis added]. See H.R. Rep. No. 542, 97th Cong., 2d Sess. 6-7 (1982), *reprinted in* 1982 U.S.C.C.A.N. 770-71. The revival of an intentionally abandoned application is antithetical to the meaning and intent of the statute and regulation.

35 U.S.C. § 41(a)(7) authorizes the Director to accept a petition "for the revival of an unintentionally abandoned application for a patent." As amended December 1, 1997, 37 CFR 1.137(b)(3) provides that a petition under 37 CFR 1.137(b) must be accompanied by a statement that the delay was unintentional, but provides that "[t]he Commissioner may require additional information where there is a question whether the delay was unintentional." Where, as here, there is a question whether the

initial delay was unintentional, the petitioner must meet the burden of establishing that the delay was unintentional within the meaning of 35 U.S.C. § 41(a)(7) and 37 CFR 1.137(b). *See* In re Application of G, 11 USPQ2d 1378, 1380 (Comm'r Pats. 1989); 37 CFR 1.137(b).

Here, in view of the inordinate delay (over 2 years) in resuming prosecution, there is a question whether the entire delay was unintentional. Petitioner should note that the issue is not whether some of the delay was unintentional by any party; rather, the issue is whether the entire delay has been shown to the satisfaction of the Director to be unintentional.

The question under 37 CFR 1.137(b) for period (1) is whether the delay on the part of the party having the right or authority to reply to avoid abandonment (or not reply) was unintentional. Accordingly, any renewed petition must clearly identify the party having the right to reply to avoid abandonment on January 20, 2006. That party, in turn must explain what effort(s) was made to further reply to the outstanding Office action and, further, why no reply was filed. If no effort was made to further reply, then that party must explain why the delay in this application does not result from a deliberate course of action (or inaction). Likewise, the attorneys of record at the time of abandonment should explain why this application became abandoned while it was under their control and what efforts the attorneys made to further reply of itself and with whom this matter was discussed. When did the attorneys become aware of the abandonment of this application?

Copies of any correspondence relating to the filing, or to not filing a further reply to the outstanding Office action are required from responsible person(s), involved with this application at the time of abandonment. Statements are required from any and the responsible person(s) having firsthand knowledge of the circumstances surrounding the lack of a reply to the outstanding Office action. As the courts have made clear, it is pointless for the USPTO to revive a long abandoned application without an adequate showing that the delay did not result from a deliberate course of action. *See* Lawman Armor v. Simon, 2005 U.S. Dist. LEXIS 10843, 74 USPQ2d 1633 (DC EMich 2005); Field Hybrids, LLC v. Toyota Motor Corp., 2005 U.S. Dist. LEXIS 1159 (D. Minn Jan. 27, 2005); Lumenyte Int'l Corp. v. Cable Lite Corp., Nos. 96-1011, 96-1077, 1996 U.S. App. LEXIS 16400, 1996 WL 383927 (Fed. Cir. July 9, 1996) (unpublished) (patents held unenforceable due to a finding of inequitable conduct in submitting an inappropriate statement that the abandonment was unintentional).

As to Period (2):

Likewise, where the applicant deliberately chooses not to seek or persist in seeking the revival of an abandoned application, or where the applicant deliberately chooses to delay seeking the revival of an abandoned application, the resulting delay in seeking revival of the abandoned application cannot be considered as "unintentional" within the meaning of 37 CFR 1.137(b). *See* MPEP 711.03(c).

The language of both 35 U.S.C. § 41(a)(7) and 37 CFR 1.137(b) are clear and unambiguous, and, furthermore, without qualification. That is, the delay in filing the reply during prosecution, as well as in filing the petition seeking revival, must have been, without qualification, "unintentional" for the reply to now be accepted on petition. The Office requires that the entire delay be at least unintentional as a prerequisite to revival of an abandoned application to prevent abuse and injury to the public. *See* H.R. Rep. No. 542, 97th Cong., 2d Sess. 7 (1982), reprinted in 1982 U.S.C.C.A.N. 771 ("[i]n order to prevent abuse and injury to the public the Commissioner . . . could require applicants to act promptly after becoming aware of the abandonment"). The December 1997 change to 37 CFR 1.137 did not create any new right to overcome an intentional delay in seeking revival, or in renewing an attempt at seeking revival, of an abandoned application. *See* Changes to Patent Practice and Procedure; Final Rule Notice, 62 Fed. Reg. 53131, 53160 (October 10, 1997), 1203 Off. Gaz. Pat. Office 63, 87 (October 21, 1997), which clearly stated that any protracted delay (here, over 2 years) could trigger, as here, a request for additional information. As the courts have since made clear, a protracted delay in seeking revival, as here, requires a petitioner's detailed explanation seeking to excuse the delay as opposed to USPTO acceptance of a general allegation of unintentional delay. *See* Lawman Armor v. Simon, 2005 U.S. Dist. LEXIS 10843, 74 USPQ2d 1633, at 1637-8 (DC EMich 2005); Field Hybrids, LLC v. Toyota Motor Corp., 2005 U.S. Dist. LEXIS 1159 (D. Minn Jan. 27, 2005) at *21-*23. Statements are required from the responsible person(s) having firsthand knowledge of the circumstances surrounding the protracted delay, after the abandonment date, in seeking revival.

Any renewed petition may be addressed as follows:

By Mail: Mail Stop PETITION
Commissioner for Patents
P. O. Box 1450
Alexandria, VA 22313-1450

By hand: U. S. Patent and Trademark Office
Customer Service Window, Mail Stop Petitions
Randolph Building
401 Dulany Street
Alexandria, VA 22314

The centralized facsimile number is **(571) 273-8300.**

Telephone inquiries concerning this decision should be directed to Tredelle Jackson at (571) 272-2783.

Ramesh Krishnamurthy

Ramesh Krishnamurthy
Petitions Examiner
Office of Petitions

UNITED STATES PATENT AND TRADEMARK OFFICE

Commissioner for Patents
United States Patent and Trademark Office
P.O. Box 1450
Alexandria, VA 22313-1450
www.uspto.gov

BSH HOME APPLIANCES CORPORATION
INTELLECTUAL PROPERTY DEPARTMENT
100 BOSCH BOULEVARD
NEW BERN NC 28562

COPY MAILED

DEC 08 2009

OFFICE OF PETITIONS

In re Application of	:	
Jochen KLEMM et al.	:	
Application No. 10/928,220	:	DECISION ON PETITION
Filed: August 27, 2004	:	
Attorney Docket No. **2002P00358WOUS**	:	

This is a decision on the renewed petition under the unintentional provisions of 37 CFR 1.137(b), filed September 21, 2009, to revive the above-identified application.

The petition is **GRANTED**.

The application became abandoned for failure to timely file a reply within the meaning of 37 CFR 1.113 to the final Office action of October 19, 2006. The proposed reply required for consideration of a petition to revive must be a Notice of Appeal (and appeal fee required by 37 CFR 41.20(b)(2), an amendment that *prima facie* places the application in condition for allowance, a Request for Continued Examination and submission (37 CFR 1.114), or the filing of a continuing application under 37 CFR 1.53(b). See MPEP 711.03(c)(III)(A)(2). No extensions of time pursuant to the provisions of 37 CFR 1.136(a) were obtained. Accordingly, the date of abandonment of this application is January 20, 2007.

The petition satisfies the requirements of 37 CFR 1.137(b) in that petitioner has supplied (1) the reply in the form of a Request for Continued Examination (RCE) and fee of $810, and the submission required by 37 CFR 1.114; (2) the petition fee of $1620; and (3) a proper statement of unintentional delay. Accordingly, the reply to the final Office Action of October 19, 2006 is accepted as having been unintentionally delayed.

Telephone inquiries concerning this decision should be directed to Tredelle Jackson at (571) 272-2783.

This application is being referred to Technology Center AU 3749 for processing of the RCE and for appropriate action by the Examiner in the normal course of business on the amendment submitted in accordance with 37 CFR 1.114.

Ramesh Krishnamurthy

Ramesh Krishnamurthy
Petitions Examiner
Office of Petitions

UNITED STATES PATENT AND TRADEMARK OFFICE

UNITED STATES DEPARTMENT OF COMMERCE
United States Patent and Trademark Office
Address: COMMISSIONER FOR PATENTS
P.O. Box 1450
Alexandria, Virginia 22313-1450
www.uspto.gov

SUGHRUE MION, PLLC
2100 PENNSYLVANIA AVENUE, N.W.
SUITE 800
WASHINGTON, DC 20037

Mail Date: 04/20/2010

Applicant	: Yuu Tanaka	: DECISION ON REQUEST FOR
Patent Number	: 7599773	: RECALCULATION of PATENT
Issue Date	: 10/06/2009	: TERM ADJUSTMENT IN VIEW
Appliction No	: 10/928,256	: OF WYETH AND NOTICE OF INTENT TO
Filed	: 08/30/2004	: ISSUE CERTIFICATE OF CORRECTION
		:

The Request for Recalculation is **GRANTED** to the extent indicated.

The patent term adjustment has been determined to be **356** days. The USPTO will *sua sponte* issue a certificate of correction reflecting the amount of PTA days determined by the recalculation.

Prior to the issuance of the certificate of correction, the USPTO will afford patentee an opportunity to be heard and request reconsideration. Accordingly, patentee has **one month or thirty (30) days**, whichever is longer, to file a request for reconsideration of this patent term adjustment calculation. See 35 U.S.C. 154(b)(3)(B)(ii) and 37 CFR 1.322(a)(4). No extensions of time will be granted under 37 CFR 1.136.

Patentee should use document code PET.OP if electronically filing a request for reconsideration of this patent term adjustment calculation. The patentee must also include the information required by 37 CFR 1.705(b)(2) and the fee required by 37 CFR 1.18(e). If patentee does not file a timely request for reconsideration of this patent term adjustment calculation including the information required by 37 CFR 1.705(b)(2) and the fee required by 37 CFR 1.18(e), the USPTO will issue a certificate of correction reflecting the PTA determination noted above.

Patentee should be aware that in order to preserve the right to review in the United States District Court for the District of Columbia of the USPTO patent term adjustment determination, patentee must ensure that he or she also take the steps required under 35 U.S.C. 154(b)(4)(A) in a timely manner. Nothing in the request for recalculation should be construed as providing an alternative time frame for commencing a civil action under 35 U.S.C. 154(b)(4)(A).

Any questions concerning this decision should be directed to the Office of Patent Legal Administration at 571-272-7702.

UNITED STATES PATENT AND TRADEMARK OFFICE

UNITED STATES DEPARTMENT OF COMMERCE
United States Patent and Trademark Office
Address: COMMISSIONER FOR PATENTS
P.O. Box 1450
Alexandria, Virginia 22313-1450
www.uspto.gov

APPLICATION NO.	FILING DATE	FIRST NAMED INVENTOR	ATTORNEY DOCKET NO.	CONFIRMATION NO.
10/928,257	08/30/2004	Moshe Hershkovich	2694/27	2987

44696 7590 01/26/2009
DR. MARK M. FRIEDMAN
C/O BILL POLKINGHORN - DISCOVERY DISPATCH
9003 FLORIN WAY
UPPER MARLBORO, MD 20772

EXAMINER
JOHNSON, JOHNESE T

ART UNIT	PAPER NUMBER
2166	

NOTIFICATION DATE	DELIVERY MODE
01/26/2009	ELECTRONIC

Please find below and/or attached an Office communication concerning this application or proceeding.

The time period for reply, if any, is set in the attached communication.

Notice of the Office communication was sent electronically on above-indicated "Notification Date" to the following e-mail address(es):

mark_f@friedpat.com
friedpat@yahoo.com
sharon_l@friedpat.com

UNITED STATES PATENT AND TRADEMARK OFFICE

COMMISSIONER FOR PATENTS
UNITED STATES PATENT AND TRADEMARK OFFICE
P.O. BOX 1450
ALEXANDRIA, VA 22313-1450
www.uspto.gov

Dr. Mark M. FRIEDMAN
C/O BILL POLKINGHORN
DISCOVERY DISPATCH
9003 Florin Way
Upper Marlboro, MD 20772

In re Application of: Moshe HERSHKOVICH et al. Application No. 10/928,257 Filed: August 30, 2004 For: DATABASE STORAGE AND MAINTENANCE USING ROW INDEX ORDERING	**DECISION SUA SPONTE WITHDRAWING NOTICE OF ABANDONMENT**

This is a decision, *sua sponte*, withdrawing the Notice of Abandonment mailed 17 November 2008.

This application is held abandoned for failure to timely file a response to the Final Office Action mailed on 22 January 2008. A Notice of Abandonment was mailed on 17 November 2008.

A review of the application indicates that the examiner interview summary mailed on 08 April 2008 stated that a new non-final Office Action will be issued shortly after the mailing of the interview summary and therefore will be replacing the Final Office Action mailed on 22 January 2008. Thus, the mailing of Notice of Abandonment on 17 November 2008 was in error.

Although no petition or request to withdraw the holding of abandonment in this application has been filed, the holding of Abandonment is hereby withdrawn.

Any inquiry concerning this decision should be directed to Vincent N. Trans whose telephone number is (571) 272-3613.

Andrew Hirshfeld, Director
Technology Center 2100
Computer Architecture and Software

UNITED STATES PATENT AND TRADEMARK OFFICE

Commissioner for Patents
United States Patent and Trademark Office
P.O. Box 1450
Alexandria, VA 22313-1450
www.uspto.gov

Finnegan, Henderson, Farabow,
Garrett & Dunner, L.L.P.
1300 I Street, N.W.
Washington DC 20005-3315

COPY MAILED

MAR 0 1 2005

OFFICE OF PETITIONS

In re Application of
George Carl Pinther II, et al.
Application No. 10/928,267
Filed: August 30, 2004
Attorney Docket No. 08350.4271-00000
For: WEAR PAD FOR AN EXTENDABLE LINKAGE

: DECISION ACCORDING STATUS
: UNDER 37 CFR 1.47(a)

This is in response to the petition under 37 CFR 1.47(a), filed January 25, 2005.

The petition is granted.

Petitioners have shown that the non-signing inventor, Gary Walth, has been presented with the application papers and has refused to join in the filing of the above-identified application. Specifically, the declaration/statement of facts of Attorney Dustin T. Johnson establishes that the inventor was successfully mailed the application papers, including the specification, claims and drawings, but the inventor failed to respond to the request that he sign the declaration. Previous to his receipt of the application papers, Mr. Walth repeatedly stated that he would not review the application papers and sign the declaration. Petitioners have submitted a declaration in compliance with 37 CFR 1.63 and 1.64.

This application and papers have been reviewed and found in compliance with 37 CFR 1.47(a). This application is hereby accorded Rule 1.47(a) status.

As provided in Rule 1.47(c), this Office will forward notice of this application's filing to the non-signing inventor at the address given in the petition. Notice of the filing of this application will also be published in the Official Gazette.

After this decision is mailed, the above-identified application will be forwarded to the Office of Initial Patent Examination for consideration of the Request for Correction of Filing Receipt, filed January 25, 2005.

Telephone inquiries should be directed to the undersigned at (571) 272-3230.

E. Shirene Willis

E. Shirene Willis
Senior Petitions Attorney
Office of Petitions

UNITED STATES PATENT AND TRADEMARK OFFICE

Commissioner for Patents
United States Patent and Trademark Office
P.O. Box 1450
Alexandria, VA 22313-1450
www.uspto.gov

MATTINGLY, STANGER, MALUR &
BRUNDIDGE, P.C.
1800 Diagonal Road
Suite 370
Alexandria, VA 22314

MAILED

DEC 1 5 2005

Technology Center 2100

In re Application of:
Shoji KODAMA
Application No. 10/928,280
Filed: August 30, 2004
For: METHOD AND SYSTEM FOR DATA LIFECYCLE MANAGEMENT IN AN EXTERNAL STORAGE LINKAGE ENVIRONMENT

DECISION ON PETITION TO MAKE SPECIAL

This is a decision on the petitions, filed on June 14, 2005 under 37 C.F.R. §102(d) and M.P.E.P. § 708.02(VIII): 'Accelerated Examination, to make the above-identified application special.

The petition is **GRANTED**.

M.P.E.P. § 708.02, Section VIII which sets out the prerequisites for a grantable petition for Accelerated Examination under 37 C.F.R. § 102(d) states in relevant part:

> A new application (one which has not received any examination by the examiner) may be granted special status provided that applicant (and this term includes applicant's attorney or agent) complies with each of the following items:
>
> (A) Submits a petition to make special accompanied by the fee set forth in 37 CFR 1.17(h);
>
> (B) Presents all claims directed to a single invention, or if the Office determines that all the claims presented are not obviously directed to a single invention, will make an election without traverse as a prerequisite to the grant of special status;
>
> (C) Submits a statement(s) that a pre-examination search was made, listing the field of search by class and subclass, publication, Chemical Abstracts, foreign patents, etc. A search made by a foreign patent office satisfies this requirement;
>
> (D) Submits one copy each of the references deemed most closely related to the subject matter encompassed by the claims if said references are not already of record; and
>
> (E) Submits a detailed discussion of the references, which discussion points out, with the particularity required by 37 CFR 1.111 (b) and (c), how the claimed subject matter is patentable over the references.

Applicant's submission of June 14, 2005 meets all the criteria set out above. Accordingly, the petition is **GRANTED**. The application file is being forwarded to the Examiner for accelerated examination in accordance with M.P.E.P. § 708.02. If the application is subsequently allowed, it will be given priority for printing. See M.P.E.P. § 1309.

Vincent N. Trans
Special Program Examiner
Technology Center 2100
Computer Architecture, Software, and
Information Security
571-272-3613

UNITED STATES PATENT AND TRADEMARK OFFICE

Commissioner for Patents
United States Patent and Trademark Office
P.O. Box 1450
Alexandria, VA 22313-1450
www.uspto.gov

COPY MAILED

OCT 1 0 2008

OFFICE OF PETITIONS

CHARLES G CALL
20 EAST GOETHE STREET
CH1
CHICAGO IL 60610-2368

In re Application of	:	
John G. Lert, Jr.	:	
Application No. 10/928,289	:	ON PETITION
Filed: August 28, 2004	:	
Attorney Docket No. E-45	:	

This is a decision on the petition filed on June 18, 2008, pursuant to 37 CFR 1.137(b), to revive the above-identified application.

The petition is **GRANTED**.

The above-identified application became for failure to timely file a proper reply to the final Office action mailed on October 16, 2007. This Office action set a shortened statutory period for reply of three (3) months. Applicant filed an Amendment on November 15, 2007. However, by Advisory Action mailed December 26, 2007, the Examiner informed applicant that the Amendment would not be entered because it failed to place the application in condition for allowance. No further reply having been received, the application became abandoned on January 17, 2008. The Office mailed a Notice of Abandonment on June 18, 2008.

With the instant petition, applicant paid the petition fee, made the proper statement of unintentional delay, and submitted a reply in the form of a Request for Continued Examination (RCE).

The matter is being forwarded to Group Art Unit 3652 for consideration of the RCE, filed June 18, 2008.

Telephone inquiries concerning this decision should be directed to the undersigned at (571)272-3207.

Cliff Congo
Petitions Attorney
Office of Petitions

UNITED STATES PATENT AND TRADEMARK OFFICE

Commissioner for Patents
United States Patent and Trademark Office
P.O. Box 1450
Alexandria, VA 22313-1450
www.uspto.gov

COPY MAILED

DEC 2 2 2009

OFFICE OF PETITIONS

PERMAN & GREEN, LLP
99 HAWLEY LANE
STRATFORD, CT 06614

In re Patent No. 7,591,630	:	
Issued: September 22, 2009	:	
Application No. 10/928,289	:	NOTICE
Filed: August 28, 2004	:	
Atty Docket No. 1127P013614-US(PAR)	:	

This is a notice regarding your request for acceptance of a fee deficiency submission under 37 CFR 1.28.

The Office no longer investigates or rejects original or reissue patent under 37 CFR 1.56. **1098 Off. Gaz. Pat. Office 502 (January 3, 1989)**. Therefore, nothing in this Notice is intended to imply that an investigation was done.

Your fee deficiency submission under 37 CFR 1.28 is hereby **ACCEPTED**.

This patent is no longer entitled to small entity status. Accordingly, all future fees paid in this patent must be paid at the large entity rate.

Inquiries related to this communication should be directed to the undersigned at (571) 272-3204.

Sherry D. Brinkley
Petitions Examiner
Office of Petitions

UNITED STATES PATENT AND TRADEMARK OFFICE

Commissioner for Patents
United States Patent and Trademark Office
P.O. Box 1450
Alexandria, VA 22313-1450
www.uspto.gov

PATENT LEGAL STAFF
EASTMAN KODAK COMPANY
343 STATE STREET
ROCHESTER NY 14650-2201

COPY MAILED
SEP 25 2006
OFFICE OF PETITIONS

In re Patent No. 7,049,048

Issue Date: May 23, 2006

Application No. 10/928,339

Filed: August 27, 2004

Attorney Docket No. **KPG-5107US**

ON PETITION

This is a decision on the petition filed May 23, 2006, which is being treated as a request under 37 CFR 3.81(b)[1] to correct the assignee data on the front page of the above-identified patent by way of a Certificate of Correction.

The request is **dismissed**.

A completed "Certificate of Correction" expressly specifying the desired correction did not accompany the request. Petitioner should complete the form PTO/SB/44, which is enclosed, and return it with any renewed request filed. Petitioner must also remit the certificate of correction of $100.00.

The renewed request may directed to the following:

By mail: Mail Stop Petitions
Commissioner for Patents
P.O. Box 1450
Alexandria, VA 22313-1450

By FAX: (571) 273-8300
Attn: Office of Petitions

Questions regarding this decision may be directed to the undersigned at (571)272-3222.

Kenya McLaughlin

Kenya A. McLaughlin
Petitions Attorney
Office of Petitions

Enclosure: Form PTO/SB/44

[1] See *Official Gazette* of June 22, 2004.

PTO/SB/44 (04-05)
Approved for use through 04/30/2007. OMB 0651-0033
U.S. Patent and Trademark Office; U.S. DEPARTMENT OF COMMERCE
Under the Paperwork Reduction Act of 1995, no persons are required to respond to a collection of information unless it displays a valid OMB control number.
(Also Form PTO-1050)

UNITED STATES PATENT AND TRADEMARK OFFICE
CERTIFICATE OF CORRECTION

Page _____ of _____

PATENT NO. :

APPLICATION NO.:

ISSUE DATE :

INVENTOR(S) :

It is certified that an error appears or errors appear in the above-identified patent and that said Letters Patent is hereby corrected as shown below:

MAILING ADDRESS OF SENDER (Please do not use customer number below):

This collection of information is required by 37 CFR 1.322, 1.323, and 1.324. The information is required to obtain or retain a benefit by the public which is to file (and by the USPTO to process) an application. Confidentiality is governed by 35 U.S.C. 122 and 37 CFR 1.14. This collection is estimated to take 1.0 hour to complete, including gathering, preparing, and submitting the completed application form to the USPTO. Time will vary depending upon the individual case. Any comments on the amount of time you require to complete this form and/or suggestions for reducing this burden, should be sent to the Chief Information Officer, U.S. Patent and Trademark Office, U.S. Department of Commerce, P.O. Box 1450, Alexandria, VA 22313-1450. DO NOT SEND FEES OR COMPLETED FORMS TO THIS ADDRESS. **SEND TO: Attention Certificate of Corrections Branch, Commissioner for Patents, P.O. Box 1450, Alexandria, VA 22313-1450.**

If you need assistance in completing the form, call 1-800-PTO-9199 and select option 2.

Privacy Act Statement

The **Privacy Act of 1974 (P.L. 93-579)** requires that you be given certain information in connection with your submission of the attached form related to a patent application or patent. Accordingly, pursuant to the requirements of the Act, please be advised that: (1) the general authority for the collection of this information is 35 U.S.C. 2(b)(2); (2) furnishing of the information solicited is voluntary; and (3) the principal purpose for which the information is used by the U.S. Patent and Trademark Office is to process and/or examine your submission related to a patent application or patent. If you do not furnish the requested information, the U.S. Patent and Trademark Office may not be able to process and/or examine your submission, which may result in termination of proceedings or abandonment of the application or expiration of the patent.

The information provided by you in this form will be subject to the following routine uses:

1. The information on this form will be treated confidentially to the extent allowed under the Freedom of Information Act (5 U.S.C. 552) and the Privacy Act (5 U.S.C 552a). Records from this system of records may be disclosed to the Department of Justice to determine whether disclosure of these records is required by the Freedom of Information Act.
2. A record from this system of records may be disclosed, as a routine use, in the course of presenting evidence to a court, magistrate, or administrative tribunal, including disclosures to opposing counsel in the course of settlement negotiations.
3. A record in this system of records may be disclosed, as a routine use, to a Member of Congress submitting a request involving an individual, to whom the record pertains, when the individual has requested assistance from the Member with respect to the subject matter of the record.
4. A record in this system of records may be disclosed, as a routine use, to a contractor of the Agency having need for the information in order to perform a contract. Recipients of information shall be required to comply with the requirements of the Privacy Act of 1974, as amended, pursuant to 5 U.S.C. 552a(m).
5. A record related to an International Application filed under the Patent Cooperation Treaty in this system of records may be disclosed, as a routine use, to the International Bureau of the World Intellectual Property Organization, pursuant to the Patent Cooperation Treaty.
6. A record in this system of records may be disclosed, as a routine use, to another federal agency for purposes of National Security review (35 U.S.C. 181) and for review pursuant to the Atomic Energy Act (42 U.S.C. 218(c)).
7. A record from this system of records may be disclosed, as a routine use, to the Administrator, General Services, or his/her designee, during an inspection of records conducted by GSA as part of that agency's responsibility to recommend improvements in records management practices and programs, under authority of 44 U.S.C. 2904 and 2906. Such disclosure shall be made in accordance with the GSA regulations governing inspection of records for this purpose, and any other relevant (*i.e.*, GSA or Commerce) directive. Such disclosure shall not be used to make determinations about individuals.
8. A record from this system of records may be disclosed, as a routine use, to the public after either publication of the application pursuant to 35 U.S.C. 122(b) or issuance of a patent pursuant to 35 U.S.C. 151. Further, a record may be disclosed, subject to the limitations of 37 CFR 1.14, as a routine use, to the public if the record was filed in an application which became abandoned or in which the proceedings were terminated and which application is referenced by either a published application, an application open to public inspection or an issued patent.
9. A record from this system of records may be disclosed, as a routine use, to a Federal, State, or local law enforcement agency, if the USPTO becomes aware of a violation or potential violation of law or regulation.

UNITED STATES PATENT AND TRADEMARK OFFICE

Commissioner for Patents
United States Patent and Trademark Office
P.O. Box 1450
Alexandria, VA 22313-1450
www.uspto.gov

LEWIS AND ROCA LLP
40 N. CENTRAL AVENUE
SUITE 1900
PHOENIX AZ 85004-4429

COPY MAILED

SEP 14 2007

OFFICE OF PETITIONS

In re Application of	:	
TYSON, Chris et al.	:	
Application No. 10/928,376	:	DECISION ON PETITION
Filed: August 27, 2007	:	TO WITHDRAW
Attorney Docket No. **46004.1U1**	:	FROM RECORD
	:	

This is a decision on the Request to Withdraw as attorney or agent of record under 37 C.F.R. § 1.36(b), filed August 15, 2007.

The request is **NOT APPROVED.**

A grantable request to withdraw as attorney/agent of record must be signed by every attorney/agent seeking to withdraw or contain a clear indication that one attorney is signing on behalf of another/others. A request to withdraw will not be approved unless at least 30 (thirty) days would remain between the date of approval and the later of the expiration date of a time to file a response or the expiration date of the maximum time period which can be extended under 37 C.F.R. § 1.136(a).

The Office cannot approve the request at this time since the reasons provided do not meet any of the conditions under the mandatory or permissive categories enumerated in 37 CFR 10.40. Section 10.40 of Title 37 of the Code of Federal Regulation states, "[a] practitioner shall not withdraw from employment in a proceeding before the Office without permission from the Office[.]" More specifically, 37 CFR 10.40 states, "[i]f paragraph (b) of this section is not applicable, a practitioner may not request permission to withdraw in matter pending before the Office unless such request or such withdrawal is" for one the permissive reasons listed in 37 CFR 10.40(c). The reasons set forth in the request, patent applicant has been transferred to new attorney, does not meet any of the conditions set forth in 37 CFR 10.40.

All future communications from the Office will continue to be directed to the above-listed address until otherwise notified by applicant.

Telephone inquiries concerning this decision should be directed to Tredelle Jackson at 571-272- 2783.

Monica A. Graves
Petitions Examiner
Office of Petitions

cc: **BRAD DESANDRO**
QUARLES AND BRADY LLP
TWO N. CENTRAL AVENUE
ONE RENAISSANCE SQUARE
PHONEX, AZ 85004-2391

PTO/SB/66 (03-09)
Approved for use through 03/31/2012. OMB 0651-0016
U.S. Patent and Trademark Office: U.S. DEPARTMENT OF COMMERCE
Under the Paperwork Reduction Act of 1995, no persons are required to respond to a collection of information unless it displays valid OMB control number.

PETITION TO ACCEPT UNINTENTIONALLY DELAYED PAYMENT OF MAINTENANCE FEE IN AN EXPIRED PATENT (37 CFR 1.378(c))

Patent Number	Issue Date (YYYY-MM-DD)	Application Number	Filing Date (YYYY-MM-DD)	Docket Number (if applicable)
6,979,089	2005-12-27	10/928,378	2004-08-27	MART.13350

CAUTION: Maintenance fee (and surcharge, if any) payment must correctly identify: (1) the patent number and (2) the application number of the actual U.S. application leading to issuance of that patent to ensure the fee(s) is/are associated with the correct patent. 37 CFR 1.366(c) and (d).

SMALL ENTITY
☒ Patentee claims, or has previously claimed, small entity status. See 37 CFR 1.27.

LOSS OF ENTITLEMENT TO SMALL ENTITY STATUS
☐ Patentee is no longer entitled to small entity status. See 37 CFR 1.27(g)

NOT Small Entity		Small Entity	
Fee	Code	Fee	Code
○ 3 ½ year	(1551)	◉ 3 ½ year	(2551)
○ 7 ½ year	(1552)	○ 7 ½ year	(2552)
○ 11 ½ year	(1553)	○ 11 ½ year	(2553)

SURCHARGE
The surcharge required by 37 CFR 1.20(i)(2) (Fee Code 1558) must be paid as a condition of accepting unintentionally delayed payment of the maintenance fee.

MAINTENANCE FEE (37 CFR 1.20(e)-(g))
The appropriate maintenance fee must be submitted with this petition.

STATEMENT
THE UNDERSIGNED CERTIFIES THAT THE DELAY IN PAYMENT OF THE MAINTENANCE FEE TO THIS PATENT WAS UNINTENTIONAL

PETITIONER(S) REQUEST THAT THE DELAYED PAYMENT OF THE MAINTENANCE FEE BE ACCEPTED AND THE PATENT REINSTATED

THIS PORTION MUST BE COMPLETED BY THE SIGNATORY OR SIGNATORIES

37 CFR 1.378(d) states: "Any petition under this section must be signed by an attorney or agent registered to practice before the Patent and Trademark Office, or by the patentee, the assignee, or other party in interest."

I certify, in accordance with 37 CFR 1.4(d)(4) that I am

◉ An attorney or agent registered to practice before the Patent and Trademark Office

○ A sole patentee

○ A joint patentee; I certify that I am authorized to sign this submission on behalf of all the other patentees.

○ A joint patentee; all of whom are signing this e-petition

○ The assignee of record of the entire interest

Patent Practitioner			
A signature of the applicant or representative is required in accordance with 37 CFR 1.33 and 10.18. Please see 37 CFR 1.4(d) for the form of the signature			
Signature	/Brandt D. Madsen/	Date (YYYY-MM-DD)	2010-07-30
Name	Brandt D. Madsen	Registration Number	65085

This collection of information is required by 37 CFR 1.378(c). The information is required to obtain or retain a benefit by the public which is to file (and by the USPTO to process) an application. Confidentiality is governed by 35 U.S.C. 122 and 37 CFR 1.11 and 1.14. This collection is estimated to take 1 hour to complete, including gathering, preparing, and submitting the completed application form to the USPTO. Time will vary depending upon the individual case. Any comments on the amount of time you require to complete this form and/ or suggestions for reducing this burden, should be sent to the Chief Information Officer, U.S. Patent and Trademark Office, U.S. Department of Commerce, P.O. Box 1450, Alexandria, VA 22313-1450. DO NOT SEND FEES OR COMPLETED FORMS TO THIS ADDRESS. **This form can only be used when in conjunction with EFS-Web. If this form is mailed to the USPTO, it may cause delays in reinstating the patent.**

Privacy Act Statement

The Privacy Act of 1974 (P.L. 93-579) requires that you be given certain information in connection with your submission of the attached form related to a patent application or patent. Accordingly, pursuant to the requirements of the Act, please be advised that: (1) the general authority for the collection of this information is 35 U.S.C. 2(b)(2); (2) furnishing of the information solicited is voluntary; and (3) the principal purpose for which the information is used by the U.S. Patent and Trademark Office is to process and/or examine your submission related to a patent application or patent. If you do not furnish the requested information, the U.S. Patent and Trademark Office may not be able to process and/or examine your submission, which may result in termination of proceedings or abandonment of the application or expiration of the patent.

The information provided by you in this form will be subject to the following routine uses:

1. The information on this form will be treated confidentially to the extent allowed under the Freedom of Information Act (5 U.S.C. 552) and the Privacy Act (5 U.S.C. 552a). Records from this system of records may be disclosed to the Department of Justice to determine whether the Freedom of Information Act requires disclosure of these records.

2. A record from this system of records may be disclosed, as a routine use, in the course of presenting evidence to a court, magistrate, or administrative tribunal, including disclosures to opposing counsel in the course of settlement negotiations.

3. A record in this system of records may be disclosed, as a routine use, to a Member of Congress submitting a request involving an individual, to whom the record pertains, when the individual has requested assistance from the Member with respect to the subject matter of the record.

4. A record in this system of records may be disclosed, as a routine use, to a contractor of the Agency having need for the information in order to perform a contract. Recipients of information shall be required to comply with the requirements of the Privacy Act of 1974, as amended, pursuant to 5 U.S.C. 552a(m).

5. A record related to an International Application filed under the Patent Cooperation Treaty in this system of records may be disclosed, as a routine use, to the International Bureau of the World Intellectual Property Organization, pursuant to the Patent Cooperation Treaty.

6. A record in this system of records may be disclosed, as a routine use, to another federal agency for purposes of National Security review (35 U.S.C. 181) and for review pursuant to the Atomic Energy Act (42 U.S.C. 218(c)).

7. A record from this system of records may be disclosed, as a routine use, to the Administrator, General Services, or his/her designee, during an inspection of records conducted by GSA as part of that agency's responsibility to recommend improvements in records management practices and programs, under authority of 44 U.S.C. 2904 and 2906. Such disclosure shall be made in accordance with the GSA regulations governing inspection of records for this purpose, and any other relevant (i.e., GSA or Commerce) directive. Such disclosure shall not be used to make determinations about individuals.

8. A record from this system of records may be disclosed, as a routine use, to the public after either publication of the application pursuant to 35 U.S.C. 122(b) or issuance of a patent pursuant to 35 U.S.C. 151. Further, a record may be disclosed, subject to the limitations of 37 CFR 1.14, as a routine use, to the public if the record was filed in an application which became abandoned or in which the proceedings were terminated and which application is referenced by either a published application, an application open to public inspections or an issued patent.

9. A record from this system of records may be disclosed, as a routine use, to a Federal, State, or local law enforcement agency, if the USPTO becomes aware of a violation or potential violation of law or regulation.

UNITED STATES PATENT AND TRADEMARK OFFICE

Commissioner for Patents
United States Patent and Trademark Office
P.O. Box 1450
Alexandria, VA 22313-1450
www.uspto.gov

In re Patent No. 6979089
Issue Date: December 27,2005
Application No. 10928378
Filed: August 27,2004
Attorney Docket No. 3755P2765

:
:DECISION GRANTING PETITION
:UNDER 37 CFR 1.378(c)
:

This is a decision on the electronic petition, filed July 30,2010 ,under 37 CFR 1.378(c) to accept the unintentionally delayed payment of the 3.5 year maintenance fee for the above-identified patent.

The petition is **GRANTED**.

The maintenance fee is accepted, and the above-identified patent reinstated as of July 30,2010 .
This decision also constitutes notice that the fee has been accepted. An electronic copy of the petition and this decision has been created as an entry in the Image File Wrapper. Nevertheless, petitioner should print and retain an independent copy.

Telephone inquiries related to this electronic decision should be directed to the Electronic Business Center at 1-866-217-9197.

UNITED STATES PATENT AND TRADEMARK OFFICE

Commissioner for Patents
United States Patent and Trademark Office
P.O. Box 1450
Alexandria, VA 22313-1450
www.uspto.gov

MORRISON & FOERSTER LLP
1650 TYSONS BOULEVARD
SUITE 300
MCLEAN VA 22102

COPY MAILED

DEC 0 8 2004

OFFICE OF PETITIONS

In re Application of	:
Garcia et al.	: DECISION GRANTING
Application No. 10/928,397	: PETITION
Filed: August 30, 2004	:
Attorney Docket No. 36030200090	:

This is a decision on the petition filed November 4, 2004, requesting that the above-identified application be accorded a filing date of August 30, 2004.

On August 30, 2004, applicants deposited the above-identified application. However, on October 25, 2004, the Office of Initial Patent Examination mailed a "Notice Of Incomplete Application," requiring drawings of applicants' invention and stating that the filing date would be the date of receipt of the omitted drawings. It is noted that the specification filed on August 30, 2004, describes drawings containing Figures 1-19; however, it appears the United States Patent and Trademark Office (Office) did not receive any drawings on filing.

In response, applicants filed the present petition and authorized payment of the petition fee. Applicants assert that the present application contains at least one method claim, and thus, is an application for which a drawing is not necessary for an understanding of the invention under the provisions of 35 U.S.C. 113.

As stated in MPEP § 601.01(f), it is the practice of the Office to treat an application that contains at least one process or method claim as an application for which a drawing is <u>not</u> necessary for an understanding of the invention under 35 U.S.C. 113 (first sentence).

MPEP § 601.01(f) also states that:

> A nonprovisional application having at least one claim, or a provisional application having at least some disclosure,

directed to the subject matter discussed above for which a drawing is usually not considered essential for a filing date, describing drawing figure(s) in the specification, but filed without drawings will be treated as an application filed without all of the drawing figures referred to in the specification as discussed in MPEP § 601.01(g), so long as the application contains something that can be construed as a written description and the names of all the inventors.

This application contains method claims. Therefore, the application should have been treated as an application filed without all of the drawing figures referred to in the specification as discussed in MPEP § 601.01(g).

MPEP § 601.01(g) states that if an application is filed without all of the drawing figure(s) referred to in the specification, a "Notice of Omitted Item(s)" is mailed indicating that the application has been accorded a filing date, but is lacking some of the figures of drawings described in the specification.

In view of the above, the requirement for drawings as set forth in the "Notice of Incomplete Application" mailed October 25, 2004, was sent in error and is hereby withdrawn. The application will be accorded a filing date of August 30, 2004. Accordingly, the petition is granted.

The $130.00 petition fee is unnecessary and will be refunded to Deposit Account No. 03-1952.

The Office of Initial Patent Examination is directed to accord the application a filing date of August 30, 2004, with "0" sheets of drawings.

Any inquiries related to this decision should be directed to the undersigned at (571) 272-3211.

Christina Tartera Donnell

Christina Tartera Donnell
Senior Petitions Attorney
Office of Petitions

UNITED STATES PATENT AND TRADEMARK OFFICE

Commissioner for Patents
United States Patent and Trademark Office
P.O. Box 1450
Alexandria, VA 22313-1450
www.uspto.gov

SPRINT NEXTEL CORPORATION
6391 SPRINT PARKWAY
MAILSTOP: KSOPHT0101-Z2100
OVERLAND PARK KS 66251

MAILED

APR 29 2009

OFFICE OF PETITIONS

In re Application of	:	
Garcia et al.	:	DECISION ON PETITION
Application No. 10/928,397	:	TO WITHDRAW
Filed: August 30, 2004	:	FROM RECORD
Attorney Docket No. 360302000900	:	

This is a decision on the request to withdraw as attorney of record under 37 C.F.R. § 1.36, filed March 27, 2009.

The request is **NOT APPROVED**.

The Request for Withdrawal as Attorney or Agent and Change of Correspondence Address submitted on March 27, 2009 is hereby not accepted. Petitioner has not complied with current USPTO requirements, as set forth in 37 CFR 10.40 concerning Request for Withdrawal as Attorney and Change of Correspondence Address. Specifically, pursuant to 37 CFR 10.40, the Office will require the practitioner(s) to certify that he, she or they have:

> (1) given reasonable notice to the client, prior to the expiration of the reply period, that the practitioner(s) intends to withdraw from employment;
>
> (2) delivered to the client or a duly authorized representative of the client all papers and property (including funds) to which the client is entitled; and
>
> (3) notified the client of any replies that may be due and the time frame within which the client must respond.

Petitioner has not complied with the above certifications. It is suggested that petitioner submit a properly completed PTO/SB/83 (effective date May 12, 2008), which provides a section wherein practitioners may certify the completion of the above-listed activities necessary for the request to withdraw from representation to be granted.

Additionally, petitioner is requesting for the withdrawal of all attorneys associated with Customer Number 25227. However, according to USPTO records, this is not the customer number associated with the current power of attorney.

The address given on the petition differs from the address of record. A courtesy copy of this decision is being mailed to the address given on the petition; however, all future communications from the Office will continue to be directed to the above-listed address until properly notified.

There is an outstanding Office action mailed November 7, 2008 that requires a reply.

Telephone inquires concerning this decision should be directed to Joan Olszewski at 571-272-7751.

/Liana Walsh/
Liana Walsh
Petitions Examiner
Office of Petitions

cc: Alex Chartove
Sprint Nextel Legal Department 3A371
6450 Sprint Parkway
Overland Park, KS 66251

UNITED STATES PATENT AND TRADEMARK OFFICE

Commissioner for Patents
United States Patent and Trademark Office
P.O. Box 1450
Alexandria, VA 22313-1450
www.uspto.gov

MACPHERSON KWOK CHEN & HEID LLP
2033 GATEWAY PLACE
SUITE 400
SAN JOSE CA 95110

COPY MAILED

AUG 0 2 2007

OFFICE OF PETITIONS

Applicant: Mukherjee et al.
Appl. No.: 10/928,420
Filing Date: August 27, 2004
U.S. Patent No.: 7,190,226
Issue Date: March 13, 2007
Title: ANALOG DELAY CHAIN HAVING MORE UNIFORMLY DISTRIBUTED CAPACITIVE LOADS AND ANALOG DELAY CELL OR USE IN CHAIN
Attorney Docket No.: M-15446 US
Pub. No.: US 2006/0044061 A1
Pub. Date: March 3, 2006

This is in response to the "Request for Corrected or Revised Patent Application Publication under 37 CFR 1.221(b)," which was received on May 2, 2006, for the above-identified application.

The request is DISMISSED as moot.

37 CFR 1.221(b) is applicable "only when the Office makes a material mistake which is apparent from Office records." A material mistake must affect the public's ability to appreciate the technical disclosure of the patent application publication, to determine the scope of the patent application publication, or to determine the scope of the provisional rights that an applicant may seek to enforce upon issuance of a patent.[1]

Since the application has already issued as U.S. Patent No. 7,190,226 on March 13, 2007, the request is deemed moot.

Inquiries relating to this matter may be directed to Mark Polutta at (571) 272-7709.

Mark O. Polutta
Senior Legal Advisor
Office of Patent Legal Administration
Office of the Deputy Commissioner
for Patent Examination Policy

[1] Changes to Implement Eighteen-Month Publication of Patent Applications, 65 FR 57023, 57038 (Sept. 20, 2000), 1239 Off. Gaz. Pat. Office Notices 63, 75 (Oct. 10, 2000) (final rule).

UNITED STATES PATENT AND TRADEMARK OFFICE

Commissioner for Patents
United States Patent and Trademark Office
P.O. Box 1450
Alexandria, VA 22313-1450
www.uspto.gov

B. L. HORVAT, M.D.
STE 104
3307 CLARK RD.
SARASOTA, FL 34231

COPY MAILED

JAN 12 2006

OFFICE OF PETITIONS

In re Application of	:	
B.L. Horvat	:	
Application No. 10/928,436	:	DECISION ON PETITION
Filed: August 27, 2004	:	TO MAKE SPECIAL UNDER
Attorney Docket No.	:	37 CFR 1.102
	:	

This is a decision on the petition under 37 CFR 1.102, filed September 21, 2005, to make the above-identified application special as set forth in M.P.E.P. § 708.02.

The petition is **DISMISSED**.

The Office is unable to review the instant petition on its merits because the petition fails to identify on what grounds the petitioner is requesting to make special under 37 CFR 1.102 (b), (c) or (d), which include sections I-XII under MPEP 708.02. The conditions set forth in MPEP 708.02 include categories (I) Manufacture, (II) Infringement, (III) Health, (IV) Age, (V) Environmental Quality, (VI) Energy, (VII) Recombinant DNA, (VIII) Accelerated Examination, (IX) Superconductivity, (X) HIV/AIDS and Cancer, (XI) Countering Terrorism, and (XII) Biotechnology filed by Small Entities. Petitions to make special are accorded to applications meeting the requirements outlined in one of the categories as set forth in MPEP 708.02. Therefore, the petition is dismissed.

The file does not indicate a change of address has been submitted, although the address given on the petition differs from the address of record. If appropriate, a change of address should be filed in accordance with MPEP 601.03. A courtesy copy of this decision is being mailed to the address given on the petition; however, the Office will mail all future correspondence solely to the address of record.

Further correspondence with respect to this matter should be addressed as follows:

By Mail: Mail Stop PETITION
Commissioner for Patents
P. O. Box 1450
Alexandria, VA 22313-1450

By hand: U. S. Patent and Trademark Office
Customer Service Window, Mail Stop Petitions

Randolph Building
401 Dulany Street
Alexandria, VA 22314

By FAX: (571) 273-8300

Telephone inquiries concerning this decision should be directed to Irvin Dingle at 571-272-3210.

All other inquiries concerning either the examination or status of the application should be directed to the Technology Center.

The application is being forwarded to the Technology Center Art Unit 2651 for action in its regular turn.

Amelia Au
Petitions Examiner
Office of Petitions

cc: Frank A. Lukasik
1609 Golden Ridge Drive
The Villages, FL 32162

UNITED STATES PATENT AND TRADEMARK OFFICE

Commissioner for Patents
United States Patent and Trademark Office
P.O. Box 1450
Alexandria, VA 22313-1450
www.uspto.gov

B.L. HORVAT, M.D.
STE 104
3307 CLARK ROAD
SARASOTA, FL 34231

COPY MAILED

SEP 14 2007

OFFICE OF PETITIONS

In re Application of	:	
Branimir L. Horvat	:	
Application No. 10/928,436	:	DECISION ON PETITION
Filed: December 13, 2004	:	TO MAKE SPECIAL UNDER
Attorney Docket No.	:	37 CFR 1.102(c)(1)
	:	

This is a decision on the renewed petition under 37 CFR 1.102(c)(1), filed August 30, 2007, to make the above-identified application special based on applicant's age as set forth in M.P.E.P. § 708.02, Section IV.

The petition is **GRANTED**.

A grantable petition to make an application special under 37 CFR 1.102(c)(1) and MPEP § 708.02, Section IV: Applicant's Age must be accompanied by evidence showing that at least one of the applicants is 65 years of age, or more, such as a birth certificate or a statement by applicant. No fee is required

The instant petition includes a copy of Inventor Branimir L. Hovat's driver license showing that he is over 65 years of age. Accordingly, the above-identified application has been accorded "special" status

Telephone inquiries concerning this decision should be directed to Irvin Dingle at 571-272-3210.

All other inquiries concerning either the examination or status of the application should be directed to the Technology Center.

The application is being forwarded to the Technology Center Art Unit 2627 for action on the merits commensurate with this decision.

Irvin Dingle
Petitions Examiner
Office of Petitions

UNITED STATES PATENT AND TRADEMARK OFFICE

UNITED STATES DEPARTMENT OF COMMERCE
United States Patent and Trademark Office
Address: COMMISSIONER FOR PATENTS
P.O. Box 1450
Alexandria, Virginia 22313-1450
www.uspto.gov

TROP, PRUNER & HU, P.C.
1616 S. VOSS ROAD, SUITE 750
HOUSTON, TX 77057-2631

Mail Date: 05/04/2010

Applicant	: Martin Smith	: DECISION ON REQUEST FOR
Patent Number	: 7620019	: RECALCULATION of PATENT
Issue Date	: 11/17/2009	: TERM ADJUSTMENT IN VIEW
Application No	: 10/928,454	: OF WYETH AND NOTICE OF INTENT TO
Filed	: 08/27/2004	: ISSUE CERTIFICATE OF CORRECTION
		:

The Request for Recalculation is **GRANTED** to the extent indicated.

The patent term adjustment has been determined to be **1143** days. The USPTO will *sua sponte* issue a certificate of correction reflecting the amount of PTA days determined by the recalculation.

Prior to the issuance of the certificate of correction, the USPTO will afford patentee an opportunity to be heard and request reconsideration. Accordingly, patentee has **one month or thirty (30) days**, whichever is longer, to file a request for reconsideration of this patent term adjustment calculation. See 35 U.S.C. 154(b)(3)(B)(ii) and 37 CFR 1.322(a)(4). No extensions of time will be granted under 37 CFR 1.136.

Patentee should use document code PET.OP if electronically filing a request for reconsideration of this patent term adjustment calculation. The patentee must also include the information required by 37 CFR 1.705(b)(2) and the fee required by 37 CFR 1.18(e). If patentee does not file a timely request for reconsideration of this patent term adjustment calculation including the information required by 37 CFR 1.705(b)(2) and the fee required by 37 CFR 1.18(e), the USPTO will issue a certificate of correction reflecting the PTA determination noted above.

Patentee should be aware that in order to preserve the right to review in the United States District Court for the District of Columbia of the USPTO patent term adjustment determination, patentee must ensure that he or she also take the steps required under 35 U.S.C. 154(b)(4)(A) in a timely manner. Nothing in the request for recalculation should be construed as providing an alternative time frame for commencing a civil action under 35 U.S.C. 154(b)(4)(A).

Any questions concerning this decision should be directed to the Office of Patent Legal Administration at 571-272-7702.

UNITED STATES PATENT AND TRADEMARK OFFICE

COMMISSIONER FOR PATENTS
UNITED STATES PATENT AND TRADEMARK OFFICE
P.O. BOX 1450
ALEXANDRIA, VA 22313-1450
WWW.USPTO.GOV

Paper No.

MACPHERSON KWOK CHEN & HEID LLP
2033 GATEWAY PLACE
SUITE 400
SAN JOSE CA 95110

COPY MAILED

SEP 04 2008

In re Application of Greg Benson et al. Application No. 10/928,472 Filed: August 26, 2004 Attorney Docket No. M-16023-1C US Title: SYSTEM AND METHOD FOR CONTROLLING THE USAGE OF DIGITAL OBJECTS	DECISION ON PETITION PURSUANT TO 37 C.F.R. § 1.181

This is a decision on the petition filed on August 8, 2008, pursuant to 37 C.F.R. § 1.181, requesting that the holding of abandonment in the above-identified application be withdrawn.

This petition is **DISMISSED**.

BACKGROUND

The above-identified application became abandoned for failure to reply in a timely manner to the notice of non-compliant amendment, mailed December 6, 2007, which set a period for reply of one month. No response were received, and no extensions of time under the provisions of 37 C.F.R. § 1.136(a) were requested. Accordingly, the above-identified application became abandoned on January 7, 2008. A notice of abandonment was mailed on July 24, 2008.

RELEVANT PORTION OF THE M.P.E.P.

In *Delgar v. Schulyer*, 172 USPQ 513 (D.D.C. 1971), the court decided that the Office should mail a new Notice of Allowance in view of the evidence presented in support of the contention that the applicant's representative did not receive the original Notice

of Allowance. Under the reasoning of *Delgar*, an allegation that an Office action was never received may be considered in a petition to withdraw the holding of abandonment. If adequately supported, the Office may grant the petition to withdraw the holding of abandonment and remail the Office action. That is, the reasoning of Delgar is applicable regardless of whether an application is held abandoned for failure to timely pay the issue fee (35 U.S.C. 151) or for failure to prosecute (35 U.S.C. 133).

To minimize costs and burdens to practitioners and the Office, the Office has modified the showing required to establish nonreceipt of an Office action. **The showing required to establish nonreceipt of an Office communication must include a statement from the practitioner describing the system used for recording an Office action received at the correspondence address of record with the USPTO. The statement should establish that the docketing system is sufficiently reliable.** It is expected that the record would include, but not be limited to, the application number, attorney docket number, the mail date of the Office action and the due date for the response.

Practitioner must state that the Office action was not received at the correspondence address of record, and **that a search of the practitioner's record(s), including any file jacket or the equivalent, and the application contents, indicates that the Office action was not received.** A copy of the record(s) used by the practitioner where the non-received Office action would have been entered had it been received is required.

A copy of the practitioner's record(s) required to show non-receipt of the Office action should include the master docket for the firm. That is, if a three month period for reply was set in the nonreceived Office action, a copy of the master docket report showing all replies docketed for a date three months from the mail date of the nonreceived Office action must be submitted as documentary proof of nonreceipt of the Office action. If no such master docket exists, the practitioner should so state and provide other evidence such as, but not limited to, the following: the application file jacket; incoming mail log; calendar; reminder system; or the individual docket record for the application in question.

The showing outlined above may not be sufficient if there are circumstances that point to a conclusion that the Office action may have been lost after receipt rather than a conclusion that the Office action was lost in the mail (e.g., if the practitioner has a history of not receiving Office actions).

Evidence of nonreceipt of an Office communication or action (e.g., Notice of Abandonment or an advisory action) other than that action to which reply was required to avoid abandonment would not warrant withdrawal of the holding of abandonment. Abandonment takes place by operation of law for failure to reply to an Office action or timely pay the issue fee, not by operation of the mailing of a Notice of Abandonment. See *Lorenz v. Finkl*, 333 F.2d 885, 889-90, 142 USPQ 26, 29-30 (CCPA 1964); *Krahn v.*

Commissioner, 15 USPQ2d 1823, 1824 (E.D. Va 1990); *In re Application of Fischer*, 6 USPQ2d 1573, 1574 (Comm'r Pat. 1988).

Emphases added.

The showing in this petition is not sufficient to withdraw the holding of abandonment. Petitioner has indicated that the notice was not received at the correspondence address of record and that a search of the practitioner's record(s), including any file jacket and the docket record, indicates that the notice was not received. Moreover, Petitioner has also provided a copy of the record(s) used by the practitioner where the non-received Office communication would have been entered had it been received.

First, Petitioner has asserted that the file jacket that is associated with this application was searched,[1] however Petitioner not been stated that **the contents** of the same were reviewed, and this search indicates that the Office action was not received.

Second, the statement that Petitioner has included describing the system used for recording an Office communication received at the correspondence address of record with the USPTO is **insufficient to either describe the docketing system or establish the reliability of the same.**

With this petition, Petitioner has indicated that his firm uses a computerized docketing system entitled "IPMaster." However, the petition is silent as to **how this system serves to ensure that the correspondence recorded therein is responded to in a timely manner.** Does this computer-based docketing software program generate reports that are distributed to the responsible attorneys/agents? Does it generate periodic reminders prior to the due dates? If so, are these reminders distributed to the responsible attorneys/agents?

Third, **Petitioner has neither included a copy of the master docket or stated that no such master docket exists.**

Any reply must be submitted within **TWO MONTHS** from the mail date of this decision. Extensions of time under 37 C.F.R. § 1.136(a) are permitted. The reply should include a cover letter entitled "Renewed Petition pursuant to 37 C.F.R. § 1.181(a)." This is not a final agency action within the meaning of 5 U.S.C § 704.

Alternatively, Petitioner may submit a petition pursuant to 37 C.F.R. §§ 1.137(a) and/or (b) either independently or concurrently with any renewed petition pursuant to 37 C.F.R. § 1.181(a)."

---

[1] See paragraph 4 of the petition.

The renewed petition should indicate in a prominent manner that the attorney handling this matter is Paul Shanoski, and may be submitted by mail,[2] hand-delivery,[3] or facsimile.[4] Registered users of EFS-Web may alternatively submit a response to this decision via EFS-Web.[5]

Telephone inquiries regarding *this decision* should be directed to the undersigned at (571) 272-3225.[6]

/Paul Shanoski/
Paul Shanoski
Senior Attorney
Office of Petitions

---

2 Mail Stop Petition, Commissioner for Patents, United States Patent and Trademark Office, P.O. Box 1450, Alexandria, VA, 22313-1450.
3 Customer Window, Randolph Building, 401 Dulaney Street, Alexandria, VA, 22314.
4 (571) 273-8300- please note this is a central facsimile number.
5 https://sportal.uspto.gov/authenticate/authenticateuserlocalepf.html
6 Petitioner will note that all practice before the Office should be in writing, and the action of the Office will be based exclusively on the written record in the Office. See 37 C.F.R. § 1.2. As such, Petitioner is reminded that no telephone discussion may be controlling or considered authority for any further action(s) of Petitioner.

UNITED STATES PATENT AND TRADEMARK OFFICE

COMMISSIONER FOR PATENTS
UNITED STATES PATENT AND TRADEMARK OFFICE
P.O. BOX 1450
ALEXANDRIA, VA 22313-1450
WWW.USPTO.GOV

Paper No.

MACPHERSON KWOK CHEN & HEID LLP
2033 GATEWAY PLACE
SUITE 400
SAN JOSE CA 95110

COPY MAILED
DEC 10 2008

In re Application of Greg Benson et al. Application No. 10/928,472 Filed: August 26, 2004 Attorney Docket No. M-16023-1C US Title: SYSTEM AND METHOD FOR CONTROLLING THE USAGE OF DIGITAL OBJECTS	:	DECISION ON RENEWED PETITION PURSUANT TO 37 C.F.R. § 1.181

This is a decision on the renewed petition filed on October 28, 2008, 2008, pursuant to 37 C.F.R. § 1.181, requesting that the holding of abandonment in the above-identified application be withdrawn.

This renewed petition is **GRANTED**.

BACKGROUND

The above-identified application became abandoned for failure to reply in a timely manner to the notice of non-compliant amendment, mailed December 6, 2007, which set a period for reply of one month. No response were received, and no extensions of time under the provisions of 37 C.F.R. § 1.136(a) were requested. Accordingly, the above-identified application became abandoned on January 7, 2008. A notice of abandonment was mailed on July 24, 2008.

RELEVANT PORTION OF THE M.P.E.P.

In *Delgar v. Schulyer*, 172 USPQ 513 (D.D.C. 1971), the court decided that the Office should mail a new Notice of Allowance in view of the evidence presented in support of the contention that

the applicant's representative did not receive the original Notice of Allowance. Under the reasoning of *Delgar*, an allegation that an Office action was never received may be considered in a petition to withdraw the holding of abandonment. If adequately supported, the Office may grant the petition to withdraw the holding of abandonment and remail the Office action. That is, the reasoning of Delgar is applicable regardless of whether an application is held abandoned for failure to timely pay the issue fee (35 U.S.C. 151) or for failure to prosecute (35 U.S.C. 133).

To minimize costs and burdens to practitioners and the Office, the Office has modified the showing required to establish nonreceipt of an Office action. The showing required to establish nonreceipt of an Office communication must include a statement from the practitioner describing the system used for recording an Office action received at the correspondence address of record with the USPTO. The statement should establish that the docketing system is sufficiently reliable. It is expected that the record would include, but not be limited to, the application number, attorney docket number, the mail date of the Office action and the due date for the response.

Practitioner must state that the Office action was not received at the correspondence address of record, and that a search of the practitioner's record(s), including any file jacket or the equivalent, and the application contents, indicates that the Office action was not received. A copy of the record(s) used by the practitioner where the non-received Office action would have been entered had it been received is required.

A copy of the practitioner's record(s) required to show non-receipt of the Office action should include the master docket for the firm. That is, if a three month period for reply was set in the nonreceived Office action, a copy of the master docket report showing all replies docketed for a date three months from the mail date of the nonreceived Office action must be submitted as documentary proof of nonreceipt of the Office action. If no such master docket exists, the practitioner should so state and provide other evidence such as, but not limited to, the following: the application file jacket; incoming mail log; calendar; reminder system; or the individual docket record for the application in question.

The showing outlined above may not be sufficient if there are circumstances that point to a conclusion that the Office action may have been lost after receipt rather than a conclusion that the Office action was lost in the mail (e.g., if the practitioner has a history of not receiving Office actions).

Evidence of nonreceipt of an Office communication or action (e.g., Notice of Abandonment or an advisory action) other than that action to which reply was required to avoid abandonment would not warrant withdrawal of the holding of abandonment. Abandonment takes place by operation of law for failure to reply to an Office action or timely pay the issue fee, not by operation of the mailing of a Notice of Abandonment. See *Lorenz v. Finkl*, 333 F.2d 885, 889-90, 142 USPQ 26, 29-30 (CCPA 1964); *Krahn v.*

Commissioner, 15 USPQ2d 1823, 1824 (E.D. Va 1990); *In re Application of Fischer*, 6 USPQ2d 1573, 1574 (Comm'r Pat. 1988).

PROCEDURAL HISTORY AND ANALYSIS

An original petition pursuant to 37 C.F.R. § 1.181 was filed on August 8, 2008, along with an indication that the notice was not received at the correspondence address of record, that a search of the practitioner's record(s), including any file jacket and the docket record, indicates that the notice was not received. Moreover, Petitioner provided a copy of the record(s) used by the practitioner where the non-received Office communication would have been entered had it been received.

The decision was dismissed via the mailing of a decision on September 4, 2008.

With this renewed petition, Petitioner has asserted that the contents of the file jacket that is associated with this application was searched, and this search indicates that the notice was not received.[1] Moreover, Petitioner has indicated that the computer-based docketing software program generates daily reports that are distributed to the responsible attorneys/agents,[2] and has provided a copy of the master docket.

Considering the facts and circumstances of the delay at issue, as set forth on petition, it is concluded that Petitioner has met his burden of establishing that the notice of December 6, 2007 was not received.

Accordingly, the petition pursuant to 37 C.F.R. § 1.181(a) is **GRANTED**. The holding of abandonment is **WITHDRAWN**.

CONCLUSION

The Technology Center will be notified of this decision. The Technology Center's support staff will re-mail the notice of non-compliant amendment of December 6, 2007, and will set a new period for response.

Petitioner may find it beneficial to view Private PAIR within a fortnight of the present decision to ensure that the withdrawal of the holding of abandonment has been acknowledged by the Technology Center in response to this decision. It is noted that all inquiries with regard to any failure of that change in status should be directed to the Technology Center where that

---

1 See paragraph 4 of the renewed petition.
2 Id. at 7.

change of status must be effected - **the Office of Petitions cannot effectuate a change of status.**

Telephone inquiries regarding this decision should be directed to the undersigned at (571) 272-3225.[3] All other inquiries concerning examination procedures or status of the application should be directed to the Technology Center.

/Paul Shanoski/
Paul Shanoski
Senior Attorney
Office of Petitions

3 Petitioner will note that all practice before the Office should be in writing, and the action of the Office will be based exclusively on the written record in the Office. See 37 C.F.R. § 1.2. As such, Petitioner is reminded that no telephone discussion may be controlling or considered authority for any of Petitioner's further action(s).

UNITED STATES PATENT AND TRADEMARK OFFICE

UNITED STATES DEPARTMENT OF COMMERCE
United States Patent and Trademark Office
Address: COMMISSIONER FOR PATENTS
P.O. Box 1450
Alexandria, Virginia 22313-1450
www.uspto.gov

Haynes and Boone, LLP
IP Section
2323 Victory Avenue
SUITE 700
Dallas, TX 75219

Mail Date: 04/21/2010

Applicant	: Greg Benson	: DECISION ON REQUEST FOR
Patent Number	: 7650418	: RECALCULATION of PATENT
Issue Date	: 01/19/2010	: TERM ADJUSTMENT IN VIEW
Appliction No	: 10/928,472	: OF WYETH AND NOTICE OF INTENT TO
Filed	: 08/26/2004	: ISSUE CERTIFICATE OF CORRECTION
		:

The Request for Recalculation is **GRANTED** to the extent indicated.

The patent term adjustment has been determined to be **992** days. The USPTO will *sua sponte* issue a certificate of correction reflecting the amount of PTA days determined by the recalculation.

Prior to the issuance of the certificate of correction, the USPTO will afford patentee an opportunity to be heard and request reconsideration. Accordingly, patentee has **one month or thirty (30) days**, whichever is longer, to file a request for reconsideration of this patent term adjustment calculation. See 35 U.S.C. 154(b)(3)(B)(ii) and 37 CFR 1.322(a)(4). No extensions of time will be granted under 37 CFR 1.136.

Patentee should use document code PET.OP if electronically filing a request for reconsideration of this patent term adjustment calculation. The patentee must also include the information required by 37 CFR 1.705(b)(2) and the fee required by 37 CFR 1.18(e). If patentee does not file a timely request for reconsideration of this patent term adjustment calculation including the information required by 37 CFR 1.705(b)(2) and the fee required by 37 CFR 1.18(e), the USPTO will issue a certificate of correction reflecting the PTA determination noted above.

Patentee should be aware that in order to preserve the right to review in the United States District Court for the District of Columbia of the USPTO patent term adjustment determination, patentee must ensure that he or she also take the steps required under 35 U.S.C. 154(b)(4)(A) in a timely manner. Nothing in the request for recalculation should be construed as providing an alternative time frame for commencing a civil action under 35 U.S.C. 154(b)(4)(A).

Any questions concerning this decision should be directed to the Office of Patent Legal Administration at 571-272-7702.

UNITED STATES PATENT AND TRADEMARK OFFICE

Commissioner for Patents
United States Patent and Trademark Office
P.O. Box 1450
Alexandria, VA 22313-1450
www.uspto.gov

McGINN & GIBB
SUITE 304
2568-A RIVA ROAD
ANNAPOLIS, MD 21401

COPY MAILED

JAN 1 4 2005

OFFICE OF PETITIONS

In re Application of	:
Brian S. Beaman et al	: DECISION GRANTING
Application No. 10/928,473	: PETITION
Filed: August 27, 2004	:
Attorney Docket No. FIS920030301US1	:

This is a decision on the petition under 37 CFR 1.10 (d), filed November 15, 2004, requesting that the above-identified application be accorded a filing date of August 27, 2004, rather than the presently accorded filing date of August 28, 2004.

Applicants request the earlier filing date on the basis that the application was purportedly deposited with the U.S. Postal Service (USPS) as Express Mail on August 27, 2004, pursuant to the requirements of 37 CFR 1.10. In support, applicants provided, inter alia, a copy of the Express Mail label, receipt no. ED148349107US, showing a Date-In of August 28, 2004. Further, the petition is accompanied by a copy of the USPS Track/Confirm system information showing that the package in question was accepted on August 27, 2004. The same Express Mail receipt number is noted on the original Application Transmittal Letter submitted with the present petition.

In view of the above, the evidence is convincing that the application was deposited as "Express Mail" with the US Postal Service on August 27, 2004. Accordingly, the instant application file is entitled to a filing date of August 27, 2004, and has been so accorded.

The petition is granted. No petition fee is required and none has been charged.

The file does not indicate a change of address has been submitted, although the address given on the petition differs from the address of record. If appropriate, a change of address should be filed in accordance with MPEP 601.03. A courtesy copy of this decision is being mailed to the address given on the petition; however, the Office will mail all future correspondence solely to the address of record.

Telephone inquiries specific to this matter should be directed to Wan Laymon at (571) 272-3220.

This matter is being referred to Technology Center AU 2833 for examination in due course.

Brian Hearn

Brian Hearn
Senior Petitions Examiner
Office of Petitions
Office of the Deputy Commissioner
for Patent Examination Policy

cc: INTERNATIONAL BUSINESS MACHINES CORPORATION
INTELLECTUAL PROPERTY LAW DEPARTMENT
BLDG 300/ZIP 482
2070 ROUTE 52
HOPEWELL JUNCTION, NY 12533

UNITED STATES PATENT AND TRADEMARK OFFICE

Commissioner for Patents
United States Patent and Trademark Office
P.O. Box 1450
Alexandria, VA 22313-1450
www.uspto.gov

MORRISON & FOERSTER LLP
425 MARKET STREET
SAN FRANCISCO CA 94105-2482

COPY MAILED

JUN 1 1 2007

OFFICE OF PETITIONS

In re Application of	:	
HINMAN, Cameron D. et al.	:	
Application No. 10/928,479	:	DECISION ON PETITION
Filed: August 26, 2004	:	TO WITHDRAW
Attorney Docket No. **506512002600**	:	FROM RECORD
	:	

This is a decision on the Request to Withdraw as attorney or agent of record under 37 C.F.R. § 1.36(b), filed March 28, 2007.

The request is **APPROVED.**

A grantable request to withdraw as attorney/agent of record must be signed by every attorney/agent seeking to withdraw or contain a clear indication that one attorney is signing on behalf of another/others. A request to withdraw will not be approved unless at least 30 (thirty) days would remain between the date of approval and the later of the expiration date of a time to file a response or the expiration date of the maximum time period which can be extended under 37 C.F.R. § 1.136(a).

The request was signed by Thomas E. Ciotti on behalf of all attorneys of record who are associated. All attorneys/agents associated have been withdrawn. Applicant is reminded that there is no attorney of record at this time.

The request to change the correspondence of record is not acceptable as the requested correspondence address is not that of: (1) the first named signing inventor; or (2) an intervening assignee of the entire interest under 37 C.F.R 3.71. All future communications from the Office will be directed to the first named signing inventor at the first copied address below until otherwise properly notified by the applicant.

Telephone inquiries concerning this decision should be directed to Tredelle Jackson at 571-272-2783.

Monica A. Graves
Petitions Examiner
Office of Petitions

cc: **CAMERON D. HINMAN**
9755 LA HONDA ROAD
WOODSIDE, CA 94062

cc: **JAMES SHAY**
SHAY LAW GROUP LLC
2755 CAMPUS DRIVE
SAN MATEO, CA 94403

UNITED STATES PATENT AND TRADEMARK OFFICE

Commissioner for Patents
United States Patent and Trademark Office
P.O. Box 1450
Alexandria, VA 22313-1450
www.uspto.gov

OBLON, SPIVAK, MCCLELLAND MAIER & NEUSTADT, P.C.
1940 DUKE STREET
ALEXANDRIA VA 22314

MAILED

FEB 06 2009

TECHNOLOGY CENTER 2100

In re Application of: HATTORI, et al.
Application No. 10/928,481
Attorney Docket: 258089US2
Filed: August 30, 2004
For: IMAGE FORMING APPARATUS, ERASING METHOD, AND HARD DISK MANAGEMENT METHOD

DECISION ON PETITION TO CONSIDER IDS

This paper provides the decision on the petition, filed November 11, 2008, under 37 CFR § 1.181 to invoke Supervisory Authority with respect to the Office Communication mailed on April 9, 2008 and require the Examiner to consider IDS entry AP: JP 64-1120 (Corr: US 4,866,541) in the Information Disclosure Statements filed on February 21, 2008.

The Petition is **GRANTED.**

Applicable Prosecution History

December 13, 2007	RCE filed.
January 8, 2008	Requirement for Restriction mailed.
February 6, 2008	Response to Election/Restriction filed.
February 21, 2008	IDS filed.
April 9, 2008	Non-Final Action mailed. IDS entry AP: JP 64-1120 (Corr: US 4,866,541) not considered.
June 26, 2008	Response to Non-Final action filed. Applicants traverse non-consideration of IDS entry AP (JP 64-1120), on the grounds that an English language equivalent application has been submitted.

August 11, 2008	Notice of Allowance mailed. No response made regarding the argument regarding non-consideration of IDS entry AP.
August 18, 2008	IDS filed containing a JP 2003-280963 with corresponding US PGPUB 2004/0064784; no translation provided.
August 25, 2008	Miscellaneous communication mailed, notifying applicant of the consideration of IDS reference filed on August 18, 2005.
November 11, 2008	Instant petition filed under 37 CFR § 1.181 to invoke Supervisory Authority with respect to the Office Communication mailed on April 9, 2008 and require the Examiner to consider IDS entry AP: JP 64-1120 (Corr: US 4,866,541) filed on February 21, 2008.

RELIEF REQUESTED

Petitioner requests that the Examiner of record consider the IDS entry AP: JP 64-1120 (Corr: US 4,866,541) filed on February 21, 2008.

RULES, LAWS & PROCEDURES

37 CFR §1.181 Petition to the Commissioner.

> (a) Petition may be taken to the Commissioner: (1) From any action or requirement of any examiner in the ex parte prosecution of an application ***which is not subject to appeal to the Board of Patent Appeals and Interferences or to the court***; (2) In cases in which a statute or the rules specify that the matter is to be determined directly by or reviewed by the Commissioner; and (3) To invoke the supervisory authority of the Commissioner in appropriate circumstances. For petitions in interferences, see § 1.644. (***Emphasis added***)

37 CFR § 1.181 (f) states:

> The mere filing of a petition will not stay any period for reply that may be running against the application, nor act as a stay of other proceedings. Any petition under this part not filed within two months of the mailing date of the action or notice from which relief is requested may be dismissed as untimely, except as otherwise provided. This two-month period is not extendable.

MPEP § 609.04(a) [R-7] Content Requirements for an Information Disclosure

Statement, states in relevant part:

III. CONCISE EXPLANATION OF RELEVANCE FOR NON-ENGLISH LANGUAGE INFORMATION

Each information disclosure statement must further include a concise explanation of the relevance, as it is presently understood by the individual designated in 37 CFR 1.56(c) most knowledgeable about the content of the information listed that is not in the English language. The concise explanation may be either separate from the specification or part of the specification. If the concise explanation is part of the specification, the IDS listing should include the page(s) or line(s) numbers where the concise explanation is located in the specification.

The requirement for a concise explanation of relevance is limited to information that is not in the English language. The explanation required is limited to the relevance as understood by the individual designated in 37 CFR 1.56(c) most knowledgeable about the content of the information at the time the information is submitted to the Office. **If a complete translation of the information into English is submitted with the non-English language information, no concise explanation is required. An English-language equivalent application may be submitted to fulfill this requirement if it is, in fact, a translation of a foreign language application being listed in an information disclosure statement. There is no requirement for the translation to be verified.** Submission of an English language abstract of a reference may fulfill the requirement for a concise explanation. Where the information listed is not in the English language, but was cited in a search report or other action by a foreign patent office in a counterpart foreign application, the requirement for a concise explanation of relevance can be satisfied by submitting an English-language version of the search report or action which indicates the degree of relevance found by the foreign office.

.....

Although a concise explanation of the relevance of the information is not required for English language information, applicants are encouraged to provide a concise explanation of why the English-language information is being submitted and how it is understood to be relevant. Concise explanations (especially those which point out the relevant pages and lines) are helpful to the Office, particularly where documents are lengthy and complex and applicant is aware of a section that is highly relevant to patentability or where a large number of documents are submitted and applicant is aware that one or more are highly relevant to patentability.

MPEP § 609.04(b) [R-5] Timing Requirements for an Information Disclosure, states in relevant part:

II. INFORMATION DISCLOSURE FILED AFTER I. ABOVE BUT **BEFORE** MAILING OF FINAL ACTION, NOTICE OF ALLOWANCE, OR AN EX PARTE QUAYLE ACTION (37 CFR 1.97 (c))
An information disclosure statement will be considered by the examiner if filed after the period specified in subsection I. above, but prior to the date the prosecution of the application closes, i.e., before (not on the same day as the mailing date of any of the following:
a final action under 37 CFR 1.113, e.g., final rejection;
a notice of allowance under 37 CFR 1.311; or
an action that closes prosecution in the application, e.g., an Ex parte Quayle action,
whichever occurs first, provided the information disclosure statement is accompanied by either
(1) a statement as specified in 37 CFR 1.97(e) (see the discussion in subsection III.B(5) below); **or**
(2) the fee set forth in 37 CFR 1.17(p).
If a final action, notice of allowance, or an Ex parte Quayle action is mailed in an application and later withdrawn, the application will be considered as not having had a final action, notice of allowance, or an Ex parte Quayle action mailed for purposes of considering an information disclosure statement. An Ex parte Quayle action is an action that closes the prosecution in the application as referred to in 37 CFR 1.97(c). Therefore, an information disclosure statement filed after an Ex parte Quayle action, must comply with the provisions of 37 CFR 1.97(d).

DECISION

I. Petition for consideration of IDS

Petitioner contends that the Information Disclosure submission included the English-language equivalent application (US 4,866,541) of a foreign language application (JP 64-1120) being listed in an Information Disclosure Statement.

Applicants have submitted that the US Patent Number 4,866,541 as the English Language Equivalent of the Japanese Application JP 64-1120, filed as part of the IDS on February 21, 2008, thus meeting the requirement of "CONCISE EXPLANATION OF RELEVANCE FOR NON-ENGLISH LANGUAGE INFORMATION" as required by MPEP 609.04(a) above. The IDS submitted also meets the timing requirements for filing of an IDS under MPEP § 609.04(b)

Accordingly, Applicant's petition, and request for consideration of the IDS entry AP: JP 64-1120 (Corr: US 4,866,541) filed on February 21, 2008, is GRANTED.

The application is being forwarded to the Examiner for consideration of the IDS entry AP: JP 64-1120 (Corr: US 4,866,541) filed on February 21, 2008.

Any inquiry concerning this decision should be directed to Mano Padmanabhan whose telephone number is (571) 272-4210.

Nestor Ramirez, Director
Technology Center 2100
Computer Architecture, Software, and Information Security

UNITED STATES PATENT AND TRADEMARK OFFICE

Commissioner for Patents
United States Patent and Trademark Office
P.O. Box 1450
Alexandria, VA 22313-1450
www.uspto.gov

COPY MAILED

JUN 15 2009

OFFICE OF PETITIONS

Weaver Austin Villeneuve & Sampson LLP
P.O. BOX 70250
OAKLAND CA 94612-0250

In re Application :
Cromwell, et al. :
Application No. 10/928,484 : PATENT TERM ADJUSTMENT
Filed: August 26, 2004 :
Dkt. No.: BSFTP002 :

This is a decision on the "APPLICATION FOR PATENT TERM ADJUSTMENT UNDER 37 C.F.R. § 1.705," filed March 10, 2009. This matter is being properly treated as an application for patent term adjustment pursuant to 37 CFR 1.705(b).

The application for patent term adjustment (PTA) under 37 CFR 1.705(b) is **HELD IN ABEYANCE IN PART and GRANTED IN PART**.

The Determination of Patent Term Adjustment under 35 U.S.C. 154(b), mailed December 22, 2008, indicates a PTA to date of 436 days. The instant application for PTA was timely filed March 10, 2009 at the time of payment of the issue fee.

Applicants do not dispute the adjustment of 460 days accorded pursuant to 37 CFR 1.702(a)(1). Further, applicants do not contest the reduction of 24 days accorded pursuant to 37 CFR 1.704(b).

Applicants argue that application is entitled to an additional adjustment in accordance with 37 CFR 1.702(b). Applicants contest the adjustment insofar as it relates to the Office's failure to issue the patent within three years of the filing date of the application pursuant to 37 CFR 1.703(b) in view of Wyeth v. Dudas, No. 07-1492 (D.D.C. September 30, 2008).

To the extent that this application for patent term adjustment requests reconsideration of the patent term adjustment as it relates to the Office's failure to issue the patent within 3 years of the filing date, a decision is being **held in abeyance** until after the actual patent date. Knowledge of the actual date the patent issues is ordinarily required to calculate the amount, if any, of additional patent term patentee is entitled to for Office failure to issue the patent within 3 years. See,

37 CFR 1.703(b). It is noted that at the time of this decision, the patent has not issued.

Applicants are given **TWO (2) MONTHS** from the issue date of the patent to file a written request for reconsideration of the patent term adjustment for Office failure to issue the patent within 3 years. A copy of this decision should accompany the request. Applicants may seek such consideration without payment of an additional fee. However, as to all other bases for seeking reconsideration of the patent term adjustment indicated in the patent, all requirements of § 1.705(d) must be met. Requests for reconsideration on other bases must be timely filed and must include payment of the required fee.

With respect to the over 3 year calculation, rather than file the request for reconsideration of Patent Term Adjustment at the time of the mailing of the notice of allowance, applicants are advised that they may wait until the time of the issuance of the patent and file a request for reconsideration of the patent term pursuant to 37 CFR 1.705(d). The USPTO notes that it does not calculate the amount of time earned pursuant to 37 CFR 1.702(b) until the time of the issuance of the patent and accordingly, the Office will consider any request for reconsideration of the patent term adjustment due to an error in the calculation of 37 CFR 1.702(b) to be timely if the request for reconsideration is filed within two months of the issuance of the patent.

Applicants further advise that the application is subject to further reduction as a result of the submission of an amendment under 37 CFR 1.312 on March 10, 2009.

The Office does not calculate post-allowance reductions pursuant to 37 CFR 1.704(c)(10) until the time of the issuance of the patent. Accordingly, it is anticipated that any reduction in connection with the Rule 312 amendment will be reflected in any subsequently mailed Issue Notification.

Applicants further advise that the Office failed to assess a reduction in connection with the information disclosure statement submitted October 30 2008.

A review of the record reveals that the adjustment of 460 days is subject to further reduction of 51 days, as indicated by applicants. In accordance with 37 CFR 1.704(c)(8), the reduction commenced September 10, 2008, the day after the date that the initial reply to the non-final Office action was filed, and

ended October 30, 2008, the date that the supplemental reply (IDS) was filed.

In view thereof, at the time of allowance, the application was entitled an adjustment of 385 days (adjustment totalling 460 days less reductions totalling 75 days).

Receipt is hereby acknowledged of the required application fee of $200.00.

The application file is being forwarded to the Office of Data Management for issuance of the patent. The patent term adjustment indicated on the patent (as shown on the Issue Notification mailed about three weeks prior to patent issuance) will include any additional adjustment accrued both for Office delay in issuing the patent more than four months after payment of the issue fee and satisfaction of all outstanding requirements, and for the Office taking in excess of three years to issue the patent (to the extent that the three-year period does not overlap with periods already accorded).

Telephone inquiries specific to this matter should be directed to the undersigned at (571) 272-3205.

Alesia M. Brown
Petitions Attorney
Office of Petitions

Enc.

Day : Sunday
Date: 6/14/2009

PALM INTRANET

Time: 11:57:46

PTA Calculations for Application: 10/928484			
Application Filing Date:	08/26/2004	PTO Delay (PTO):	460
Issue Date of Patent:		Three Years:	0
Pre-Issue Petitions:	0	Applicant Delay (APPL):	24
Post-Issue Petitions:	0	Total PTA (days):	385
PTO Delay Adjustment:	-51		

File Contents History

Number	Date	Contents Description	PTO	APPL	START
84	06/14/2009	ADJUSTMENT OF PTA CALCULATION BY PTO		51	
67	12/22/2008	MAIL NOTICE OF ALLOWANCE			
66	12/20/2008	ISSUE REVISION COMPLETED			
65	12/20/2008	CASE DOCKETED TO EXAMINER IN GAU			
64	12/20/2008	DOCUMENT VERIFICATION			
63	12/20/2008	NOTICE OF ALLOWANCE DATA VERIFICATION COMPLETED			
62	12/19/2008	NOTICE OF ALLOWABILITY			
58	10/30/2008	INFORMATION DISCLOSURE STATEMENT CONSIDERED			
57	10/30/2008	INFORMATION DISCLOSURE STATEMENT (IDS) FILED			
56	10/08/2008	DATE FORWARDED TO EXAMINER			
55	09/09/2008	RESPONSE AFTER NON-FINAL ACTION		24	53
54	09/09/2008	REQUEST FOR EXTENSION OF TIME - GRANTED			
53	05/16/2008	MAIL NON-FINAL REJECTION			
52	05/12/2008	NON-FINAL REJECTION			
51	04/25/2008	DATE FORWARDED TO EXAMINER			
50	04/17/2008	AMENDMENT SUBMITTED/ENTERED WITH FILING OF CPA/RCE			
49	04/25/2008	DATE FORWARDED TO EXAMINER			
48	04/17/2008	REQUEST FOR CONTINUED EXAMINATION (RCE)			
47	04/25/2008	DISPOSAL FOR A RCE/CPA/129 (EXPRESS ABANDONMENT IF CPA)			
46	04/17/2008	WORKFLOW - REQUEST FOR RCE - BEGIN			
45	04/02/2008	CASE DOCKETED TO EXAMINER IN GAU			

44	02/05/2008	MAIL FINAL REJECTION (PTOL - 326)			
43	02/02/2008	FINAL REJECTION			
42	10/30/2007	INFORMATION DISCLOSURE STATEMENT CONSIDERED			
41	10/30/2007	REFERENCE CAPTURE ON IDS			
40	10/30/2007	INFORMATION DISCLOSURE STATEMENT (IDS) FILED		0	38
39	11/08/2007	DATE FORWARDED TO EXAMINER			
38	10/30/2007	RESPONSE AFTER NON-FINAL ACTION			
36	10/30/2007	INFORMATION DISCLOSURE STATEMENT (IDS) FILED			
35	07/30/2007	MAIL NON-FINAL REJECTION			
34	07/23/2007	NON-FINAL REJECTION			
33	05/09/2007	DATE FORWARDED TO EXAMINER			
32	04/27/2007	RESPONSE AFTER NON-FINAL ACTION			
31	04/27/2007	REFERENCE CAPTURE ON IDS			
30.7	04/27/2007	INFORMATION DISCLOSURE STATEMENT (IDS) FILED			
30	04/27/2007	INFORMATION DISCLOSURE STATEMENT (IDS) FILED			
29	02/12/2007	CASE DOCKETED TO EXAMINER IN GAU			
28	01/29/2007	MAIL NON-FINAL REJECTION	460		-1
27	01/08/2007	NON-FINAL REJECTION			
26	06/06/2006	INFORMATION DISCLOSURE STATEMENT CONSIDERED			
25	03/08/2006	INFORMATION DISCLOSURE STATEMENT CONSIDERED			
24	10/17/2005	INFORMATION DISCLOSURE STATEMENT CONSIDERED			
23	05/06/2005	INFORMATION DISCLOSURE STATEMENT CONSIDERED			
22	08/26/2004	INFORMATION DISCLOSURE STATEMENT CONSIDERED			
21	06/06/2006	REFERENCE CAPTURE ON IDS			
20.7	06/06/2006	INFORMATION DISCLOSURE STATEMENT (IDS) FILED			
20	06/06/2006	INFORMATION DISCLOSURE STATEMENT (IDS) FILED			
19	03/08/2006	REFERENCE CAPTURE ON IDS			
18.7	03/08/2006	INFORMATION DISCLOSURE STATEMENT (IDS) FILED			

18	03/08/2006	INFORMATION DISCLOSURE STATEMENT (IDS) FILED			
17	10/17/2005	REFERENCE CAPTURE ON IDS			
16.7	10/17/2005	INFORMATION DISCLOSURE STATEMENT (IDS) FILED			
16	10/17/2005	INFORMATION DISCLOSURE STATEMENT (IDS) FILED			
15	10/14/2005	CASE DOCKETED TO EXAMINER IN GAU			
14	05/06/2005	REFERENCE CAPTURE ON IDS			
13.7	05/06/2005	INFORMATION DISCLOSURE STATEMENT (IDS) FILED			
13	05/06/2005	INFORMATION DISCLOSURE STATEMENT (IDS) FILED			
12	01/06/2005	IFW TSS PROCESSING BY TECH CENTER COMPLETE			
11	01/06/2005	CASE DOCKETED TO EXAMINER IN GAU			
10.7	08/26/2004	INFORMATION DISCLOSURE STATEMENT (IDS) FILED			
10	08/26/2004	INFORMATION DISCLOSURE STATEMENT (IDS) FILED			
9	08/26/2004	REFERENCE CAPTURE ON IDS			
8	10/25/2004	APPLICATION RETURN FROM OIPE			
7	10/25/2004	APPLICATION RETURN TO OIPE			
6	10/25/2004	APPLICATION DISPATCHED FROM OIPE			
5	10/26/2004	APPLICATION IS NOW COMPLETE			
4	10/05/2004	CLEARED BY OIPE CSR			
3	10/05/2004	CASE CLASSIFIED BY OIPE			
2	09/13/2004	IFW SCAN & PACR AUTO SECURITY REVIEW			
1	08/26/2004	INITIAL EXAM TEAM NN			

Search Another: Application# Search

EXPLANATION OF PTA CALCULATION

EXPLANATION OF PTE CALCULATION

To go back, right click here and select Back. To go forward, right click here and select Forward. To refresh, right click here and select Refresh.

Back to OASIS | Home page

UNITED STATES PATENT AND TRADEMARK OFFICE

COMMISSIONER FOR PATENTS
UNITED STATES PATENT AND TRADEMARK OFFICE
P.O. BOX 1450
ALEXANDRIA, VA 22313-1450
www.uspto.gov

Weaver Austin Villeneuve & Sampson LLP
P.O. BOX 70250
OAKLAND CA 94612-0250

COPY MAILED

DEC 15 2009

OFFICE OF PETITIONS

In re Patent No. 7,576,862 :
Issued: August 18, 2009 :
Application No. 10/928,484 : PATENT TERM ADJUSTMENT
Filed: August 26, 2004 :
Dkt. No.: BSFTP002 :

This is a decision on the "REQUEST FOR PATENT TERM ADJUSTMENT UNDER 37 C.F.R. § 1.705(d)," filed September 28, 2009. Patentee requests that the patent term adjustment be increased by 723 days. Patentee requests this correction on the basis that the Office took in excess of three years to issue the above-referenced patent.

The application for patent term adjustment (PTA) under 37 CFR 1.705(d) is **DISMISSED**.

The above-identified application matured into U.S. Pat. No. 7,576,862 on August 18, 2009. The patent issued with a patent term adjustment of 410 days. The instant application for patent term adjustment was timely filed in accordance with 37 CFR 1.705(d). Patentee argues that in view of Wyeth v. Dudas, Civil Action No. 07-1492, 580 F. Supp. 2d 138, 88 U.S.P.Q. 2d 1538 (D.D.C. Sept. 30, 2008), the patent is entitled to an additional 723 days pursuant to 35 USC 154(b)(1)(B) and 37 CFR 1.702(b). Thus, patentee appears to assert entitled to an overall patent term adjustment of 1133 days (499 days of adjustment under 37 CFR 1.702(a) *plus* 723 days of adjustment under 37 CFR 1.702(b) *less* 89 days of applicant delay). Patentee asserts that 723 days is the number of days between the Issue Date, August 18, 2009, and the three-year date, August 26, 2007.

It is noted that the application for patent term adjustment does not acknowledge the RCE submitted April 17, 2008. Thus, it is further noted that in accordance with 37 CFR 1.702(b)(1), any time consumed by continued examination under 35 USC 132(b) is not included in any calculation of adjustment pursuant to 37 CFR 1.702(b).

Moreover, under 37 CFR 1.703(f), patentees are entitled to a period of patent term adjustment equal to the period of delays based on the grounds set forth in 37 CFR 1.702 reduced by the period of time equal to the period of time during which patentees failed to engage in reasonable efforts to conclude prosecution pursuant to 37 CFR 1.704. In other words, patentees are entitled to the period of Office delay reduced by the period of applicant delay.

The Office asserts that as of the filing of the request for continued examination (RCE) on April 17, 2008, the application was pending three years and 234 days after its filing date (August 27, 2007 to April 16, 2008). The Office asserts that as of the filing of the RCE, certain action was not taken within the specified time frame, and thus, the entry of a period of adjustment of 460

days is correct. At issue is whether patentees should accrue 234 days of patent term adjustment for the Office taking in excess of three years to issue the patent, as well as 460 days for Office failure to take a certain action within a specified time frame (or examination delay).

The Office contends that the period of 234 days of delay in issuing the patent overlaps with the 460 days of examination delay under 37 CFR 1.702(a)(1). Patentees' calculation of the period of overlap is inconsistent with the Office's interpretation of this provision. 35 U.S.C. 154(b)(2)(A) limits the adjustment of patent term, as follows:

35 U.S.C. 154(b)(2)(A) limits the adjustment of patent term, as follows:

> To the extent that the periods of delay attributable to grounds specified in paragraph (1) overlap, the period of any adjustment granted under this subsection shall not exceed the actual number of days the issuance of the patent was delayed.

As explained in *Explanation of 37 CFR 1.703(f)*[1] *and of the United States Patent and Trademark Office Interpretation of 35 U.S.C. 154(b)(2)(A)*, 69 Fed. Reg. 34283 (June 21, 2004), the Office interprets 35 U.S.C. 154(b)(2)(A) as permitting either patent term adjustment under 35 U.S.C. 154(b)(1)(A)(i)-(iv), or patent term adjustment under 35 U.S.C. 154(b)(1)(B), but not as permitting patent term adjustment under both 35 U.S.C. 154(b)(1)(A)(i)-(iv) and 154(b)(1)(B). Accordingly, the Office implements the overlap provision as follows:

> If an application is entitled to an adjustment under 35 U.S.C. 154(b)(1)(B), the entire period during which the application was pending (except for periods excluded under 35 U.S.C. 154(b)(1)(B)(i)-(iii)), and not just the period beginning three years after the actual filing date of the application, is the period of delay under 35 U.S.C. 154(b)(1)(B) in determining whether periods of delay overlap under 35 U.S.C. 154(b)(2)(A). Thus, any days of delay for Office issuance of the patent more than 3 years after the filing date of the application, which overlap with the days of patent term adjustment accorded prior to the issuance of the patent will not result in any additional patent term adjustment. See 35 U.S.C. 154(b)(1)(B), 35 U.S.C. 154(b)(2)(A), and 37 CFR § 1.703(f). See *Changes to Implement Patent Term Adjustment Under Twenty Year Term; Final Rule*, 65 Fed. Reg. 54366 (Sept. 18, 2000). See also *Revision of Patent Term Extension and Patent Term Adjustment Provisions; Final Rule*, 69 Fed. Reg. 21704 (April 22, 2004), 1282 Off. Gaz. Pat. Office 100 (May 18, 2004).

Further, as stated in the *Explanation of 37 CFR 1.703(f) and of the United States Patent and Trademark Office Interpretation of 35 U.S.C. 154(b)(2)(A)*, the Office has consistently taken the position that if an application is entitled to an adjustment under the three-year pendency

---

[1] Likewise, 37 CFR 1.703(f) provides that:

> To the extent that periods of delay attributable to the grounds specified in §1.702 overlap, the period of adjustment granted under this section shall not exceed the actual number of days the issuance of the patent was delayed.

provision of 35 U.S.C. 154(b)(1)(B), the entire period during which the application was pending before the Office (except for periods excluded under 35 U.S.C. 154(b)(1)(B)(i)-(iii)), and not just the period beginning three years after the actual filing date of the application, is the relevant period under 35 U.S.C. 154(b)(1)(B) in determining whether periods of delay "overlap" under 35 U.S.C. 154(b)(2)(A).

This interpretation is consistent with the statute. Taken together the statute and rule provide that to the extent that periods of delay attributable to grounds specified in 35 U.S.C. 154(b)(1) and in corresponding §1.702 overlap, the period of adjustment granted shall not exceed the actual number of days the issuance of the patent was delayed.

In this instance, the relevant period under 35 U.S.C. 154(b)(1)(B) in determining whether periods of delay "overlap" under 35 U.S.C. 154(b)(2)(A) is the period during which the application was pending before the Office beginning on the application filing date under 35 U.S.C. 111(a), August 26, 2004, and ending on April 16, 2008, the day before the date that the RCE was filed on April 17, 2008.

Pursuant to 35 U.S.C. 154(b)(1)(A) and 37 CFR 1.702(a)(1), 460 days of patent term adjustment were accorded during the pendency of the application for Office delay prior to the filing of the RCE. Pursuant to 35 U.S.C. 154(b)(1)(B) and 37 CFR 1.702(b), 234 days of patent term adjustment had accrued at the time of submission of the RCE for Office issuance of the patent more than three years after the application filing date.

The 234 days of patent term adjustment under 37 CFR 1.702(b) overlaps with the 460 days of patent term adjustment under 37 CFR 1.702(a)(1). Entry of both the 234 days and the 460 days is neither permitted nor warranted given that 460 days is the actual number of days issuance of the patent was delayed at the time of submission of the RCE.

Accordingly, at issuance, the Office properly entered 410 days of patent term adjustment, having considered the 234 days of Office delay under the three-year pendency provision in conjunction with the 460 days of delay under 37 CFR 1.702(a)(1) that accrued prior to submission of the RCE and the adjustment of 39 days under 37 CFR 1.702(a)(4) that accrued subsequent to the submission of the RCE, reduced 89 days for applicant delay.

In view thereof, no adjustment to the patent term will be made.

No additional fee is due in connection with this matter.

Telephone inquiries specific to this matter should be directed to the undersigned at (571) 272-3205.

Alesia M. Brown
Petitions Attorney
Office of Petitions

UNITED STATES PATENT AND TRADEMARK OFFICE

UNITED STATES DEPARTMENT OF COMMERCE
United States Patent and Trademark Office
Address: COMMISSIONER FOR PATENTS
P.O. Box 1450
Alexandria, Virginia 22313-1450
www.uspto.gov

Weaver Austin Villeneuve & Sampson LLP
P.O. BOX 70250
OAKLAND, CA 94612-0250

Mail Date: 04/20/2010

Applicant	: Evan F. Cromwell	: DECISION ON REQUEST FOR
Patent Number	: 7576862	: RECALCULATION of PATENT
Issue Date	: 08/18/2009	: TERM ADJUSTMENT IN VIEW
Appliction No	: 10/928,484	: OF WYETH AND NOTICE OF INTENT TO
Filed	: 08/26/2004	: ISSUE CERTIFICATE OF CORRECTION
		:

The Request for Recalculation is **GRANTED** to the extent indicated.

The patent term adjustment has been determined to be **538** days. The USPTO will *sua sponte* issue a certificate of correction reflecting the amount of PTA days determined by the recalculation.

Prior to the issuance of the certificate of correction, the USPTO will afford patentee an opportunity to be heard and request reconsideration. Accordingly, patentee has **one month or thirty (30) days**, whichever is longer, to file a request for reconsideration of this patent term adjustment calculation. See 35 U.S.C. 154(b)(3)(B)(ii) and 37 CFR 1.322(a)(4). No extensions of time will be granted under 37 CFR 1.136.

Patentee should use document code PET.OP if electronically filing a request for reconsideration of this patent term adjustment calculation. The patentee must also include the information required by 37 CFR 1.705(b)(2) and the fee required by 37 CFR 1.18(e). If patentee does not file a timely request for reconsideration of this patent term adjustment calculation including the information required by 37 CFR 1.705(b)(2) and the fee required by 37 CFR 1.18(e), the USPTO will issue a certificate of correction reflecting the PTA determination noted above.

Patentee should be aware that in order to preserve the right to review in the United States District Court for the District of Columbia of the USPTO patent term adjustment determination, patentee must ensure that he or she also take the steps required under 35 U.S.C. 154(b)(4)(A) in a timely manner. Nothing in the request for recalculation should be construed as providing an alternative time frame for commencing a civil action under 35 U.S.C. 154(b)(4)(A).

Any questions concerning this decision should be directed to the Office of Patent Legal Administration at 571-272-7702.

UNITED STATES PATENT AND TRADEMARK OFFICE

UNITED STATES DEPARTMENT OF COMMERCE
United States Patent and Trademark Office
Address: COMMISSIONER FOR PATENTS
P.O. Box 1450
Alexandria, Virginia 22313-1450
www.uspto.gov

Weaver Austin Villeneuve & Sampson LLP
P.O. BOX 70250
OAKLAND, CA 94612-0250

Mail Date: 05/17/2010

Applicant : Evan F. Cromwell
Patent Number : 7576862
Issue Date : 08/18/2009
Application No : 10/928,484
Filed : 08/26/2004

: NOTICE CONCERNING IMPROPER
: CALCULATION OF PATENT TERM
: ADJUSTMENT BASED UPON USPTO
: IMPROPERLY MEASURING REDUCTION
: PERIOD UNDER 37 CFR 1.704(c)(10).

The United States Patent and Trademark Office (USPTO) discovered that in processing the recent recalculation decisions mailed in response to patentee's filed Request for Recalculation of Patent Term Adjustment in view of Wyeth, the USPTO improperly measured the reduction period for reductions under 37 CFR 1.704(c)(10). Pursuant to 37 CFR 1.704(c)(10), patentee's reduction begins on the date of filing the amendment under 37 CFR 1.312 ("1.312 amendment") or other related paper and ends on the date that the Office mails a response to the filing of the 1.312 amendment or other paper. It has been discovered that during the recalculation, the calculation failed to the limit the reduction to the mail date of the response to the 1.312 amendment or other paper. Accordingly, patentee's reductions were greater than warranted.

This notice **VACATES** the previous GRANTED request for recalculation and provides patentee with a revised GRANTED recalculation.

The patent term adjustment has been determined to be **644** days. The USPTO will *sua sponte* issue a certificate of correction reflecting the amount of patent term adjustment (PTA) days determined by the recalculation.

Prior to the issuance of the certificate of correction, the USPTO will afford patentee an opportunity to be heard and request reconsideration. Accordingly, patentee has **one month or thirty (30) days** from the mail date of this notice, whichever is longer, to file a request for reconsideration of this PTA calculation. See 35 U.S.C. § 154(b)(3)(B)(ii) and 37 CFR 1.322(a)(4).

Patentee should use document code PET.OP if electronically filing a request for reconsideration of this PTA calculation. The patentee must also include the information required by 37 CFR 1.705(b)(2), and the fee required by 37 CFR 1.18(e). If patentee does not file a timely request for reconsideration of this PTA calculation, including the information required by 37 CFR 1.705(b)(2) and the fee required by 37 CFR 1.18(e), the USPTO will issue a certificate of correction reflecting the PTA determination noted above.

Patentee should be aware that in order to preserve the right of review of the USPTO's PTA determination in the United States District Court for the District of Columbia, patentee must ensure that the steps required under 35 U.S.C. § 154 (b)(4) are taken in a timely manner. Nothing in the request for recalculation should be construed as providing an alternative time frame for commencing a civil action under 35 U.S.C. § 154(b)(4).

UNITED STATES PATENT AND TRADEMARK OFFICE

Commissioner for Patents
United States Patent and Trademark Office
P.O. Box 1450
Alexandria, VA 22313-1450
www.uspto.gov

MERCHANT & GOULD PC
P.O. BOX 2903
MINNEAPOLIS MN 55402-0903

COPY MAILED

NOV 2 4 2008

OFFICE OF PETITIONS

In re Application of
Lille
Application No.: 10/928,513
Filing Date: 26 August, 2004
Attorney Docket No.
15872.0090US01/HSJ9200401

DECISION

This is a decision on the petition filed on 17 July 2008, to revive an application under 37 C.F.R. §1.137(b) as having been abandoned due to unintentional delay.

The petition under 37 C.F.R. §1.137(b) is **GRANTED**.

As to Allegations of
Unintentional Delay

The requirements of a grantable petition pursuant to 37 C.F.R. §1.137(b) are the petition and fee therefor, a reply, a proper statement of unintentional delay under the regulation, and, where applicable, a terminal disclaimer and fee. (However, it does not appear that a terminal disclaimer and fee are due here.)

BACKGROUND

The record reflects that:

Petitioner failed to reply timely and properly to a non-final Office action (Restriction Requirement) mailed on 5 October, 2007, with reply due absent an extension of time on or before 5 January, 2008.

The application went abandoned by operation of law after midnight on 5 January, 2008.

The Office mailed the Notice of Abandonment on 20 May, 2008.

On 17 July, 2008, Petitioner filed the instant petition (with fee) alleging unintentional delay under 37 C.F.R. §1.137(b), included therewith, *inter alia*, a reply in the form of an amendment, and made the statement of unintentional delay.

For reasons unknown Petitioner requested and paid for an extension of time—this is not proper after the expiration of the statutory reply period. The fee will be refunded via Petitioner's credit card—should Petitioner later find that the fee has not been refunded Petitioner should submit a request to the Office of Finance and attach thereto a copy of this decision.

The availability of applications and application papers online to applicants/practitioners who diligently associate their Customer Number with the respective application(s) now provides an applicant/practitioner on-demand information as to events/transactions in an application.

Out of an abundance of caution, Petitioners always are reminded that those registered to practice and all others who make representations before the Office are reminded to inquire into the underlying facts of representations made to the Office and support averments with the appropriate documentation–since all owe to the Office the continuing duty to disclose.[1]

STATUTES, REGULATIONS AND ANALYSIS

Congress has authorized the Commissioner to "revive an application if the delay is shown to the satisfaction of the Commissioner to have been "unavoidable." 35 U.S.C. §133 (1994).[2]
The regulations at 37 C.F.R. §1.137(a) and (b) set forth the requirements for a petitioner to revive a previously unavoidably or unintentionally, respectively, abandoned application under this Congressional grant of authority.

As to Allegations of Unintentional Delay

The requirements under 37 C.F.R. §1.137(b) have been satisfied.

---

[1] See supplement of 17 June, 1999. The Patent and Trademark Office is relying on petitioner's duty of candor and good faith and accepting a statement made by Petitioner. See Changes to Patent Practice and Procedure, 62 Fed. Reg. at 53160 and 53178, 1203 Off. Gaz. Pat. Office at 88 and 103 (responses to comments 64 and 109)(applicant obligated under 37 C.F.R. §10.18 to inquire into the underlying facts and circumstances when providing statements to the Patent and Trademark Office).

[2] 35 U.S.C. §133 provides:

35 U.S.C. §133 Time for prosecuting application.

Upon failure of the applicant to prosecute the application within six months after any action therein, of which notice has been given or mailed to the applicant, or within such shorter time, not less than thirty days, as fixed by the Commissioner in such action, the application shall be regarded as abandoned by the parties thereto, unless it be shown to the satisfaction of the Commissioner that such delay was unavoidable.

CONCLUSION

Accordingly, The petition under 37 C.F.R. §1.137(b) is **granted**.

The instant application is released to Technology Center/AU (TC/AU) 2627 for further processing in due course.

Petitioner may find it beneficial to view Private PAIR within a fortnight of the instant decision to ensure that the revival has been acknowledged by the TC/AUin response to this decision. It is noted that all inquiries with regard to that change in status need be directed to the TC/AU where that change of status must be effected—that does not occur in the Office of Petitions.

Telephone inquiries regarding this decision may be directed to the undersigned at (571) 272-3214—it is noted, however, that all practice before the Office is in writing (see: 37 C.F.R. §1.2[3]) and the proper authority for action on any matter in this regard are the statutes (35 U.S.C.), regulations (37 C.F.R.) and the commentary on policy (MPEP). Therefore, no telephone discussion may be controlling or considered authority for Petitioner's action(s).

/John J. Gillon, Jr./
John J. Gillon, Jr.
Senior Attorney
Office of Petitions

[3] The regulations at 37 C.F.R. §1.2 provide:
§1.2 Business to be transacted in writing.
All business with the Patent and Trademark Office should be transacted in writing. The personal attendance of applicants or their attorneys or agents at the Patent and Trademark Office is unnecessary. The action of the Patent and Trademark Office will be based exclusively on the written record in the Office. No attention will be paid to any alleged oral promise, stipulation, or understanding in relation to which there is disagreement or doubt.

UNITED STATES PATENT AND TRADEMARK OFFICE

Commissioner for Patents
United States Patent and Trademark Office
P.O. Box 1450
Alexandria, VA 22313-1450
www.uspto.gov

HAMRE, SCHUMANN, MUELLER & LARSON P.C.
P.O. BOX 2902-0902
MINNEAPOLIS MN 55402

COPY MAILED

JUL 06 2007

OFFICE OF PETITIONS

In re Application of
Kojiro Okuyama, et al :
Application No. 10/928,516 : ON PETITION
Filed: August 27, 2004 :
Attorney Docket No. 10873.1532US01 :
:

This is a decision on the petition filed June 29, 2007, requesting withdrawal of the above-identified application from issue after payment of the issue fee.

The petition is **DISMISSED as moot.**

Unfortunately, the petition did not reach the appropriate official for decision within sufficient time to avert issuance of the application into a patent. Petitioner's attention is directed to 37 CFR 1.313(d), which states:

> A petition under this section will not be effective to withdraw the application from issue unless it is actually received and granted by the appropriate officials **before the date of issue.** Withdrawal of an application from issue after payment of the issue fee may not be effective to avoid publication of application information.

The information disclosure statement (IDS) has been placed in the file of the above-identified application without further consideration. See 37 CFR 1.97(l).

Telephone inquiries should be directed to the undersigned at (571) 272-3208.

Karen Creasy

Karen Creasy
Petitions Examiner
Office of Petitions

UNITED STATES PATENT AND TRADEMARK OFFICE

Commissioner for Patents
United States Patent and Trademark Office
P.O. Box 1450
Alexandria, VA 22313-1450
www.uspto.gov

KNOBBE MARTENS OLSON & BEAR LLP
2040 MAIN STREET
FOURTEENTH FLOOR
IRVINE CA 92614

COPY MAILED

FEB 2 2 2005

OFFICE OF PETITIONS

In re Application of
Satoh, et al.
Application No.: 10/928,517
Filed: August 27, 2004
Attorney Docket No.: ASMJP1.154AUS
For: SOURCE GAS FLOW CONTROL AND CVD USING SAME

DECISION REFUSING STATUS UNDER 37 CFR 1.47(a)

This is a decision on the petition under 37 CFR 1.47(a), filed January 12, 2005 (certificate of mailing date January 10, 2005).

The petition is **DISMISSED**.

Any request for reconsideration of this decision must be submitted within TWO (2) MONTHS from the mail date of this decision. Extensions of time under 37 CFR 1.136(a) are permitted. Any response should be entitled "Request for Reconsideration of Petition Under 37 CFR 1.47(a)" and may include an oath or declaration executed by the inventor. **Failure to respond will result in abandonment of the application.**

The above-identified application was filed on August 27, 2004 without an executed declaration. On November 3, 2004, the Office mailed a Notice to File Missing Parts of Nonprovisional Application, requiring an executed oath/declaration and a surcharge for its late filing. In response, on January 12, 2005 (certificate of mailing date January 10, 2005), petitioners filed a request for a one (1) month extension of time and required fee, a declaration executed by 4 of 5 joint inventors, and a Rule 47 petition with the required $200 fee.[1] The petition is accompanied by a declaration of Kazue Fujiya that states that Hak Ju Lee, the non-signing inventor, was successfully mailed a copy of the application as filed and a declaration for his signature, but Mr. Lee has not returned an executed declaration.

A grantable petition under 37 CFR 1.47(a) requires

(1) a petition including proof of the pertinent facts establishing that the joint inventor(s) refuses to join, or cannot be found or reached after diligent effort,
(2) a proper oath or Declaration executed by the available joint inventor(s),
(3) the fee of $200 as specified in 37 CFR § 1.17(g), and
(4) the last known address of the omitted inventor(s).

This petition lacks item (2) above.

---

[1] Petitioners submitted a $130.00 petition fee. The balance due was charged to petitioners' deposit account. In addition, OIPE overcharged petitioners' deposit account by $130.00. Accordingly, $130.00 will be refunded.

As to item (2), the oath or declaration is not acceptable. See MPEP 409.03(a) Petitioners are reminded that all inventors must make declaration on their own behalf **and** on the behalf of the non-signing inventor. In this instance, only the first named inventor made declaration/signed on behalf of the non-signing inventor.

The simplest way to remedy the problem is to submit a newly executed declaration in which the signing inventors sign in their respective signature blocks and the nonsigning inventor's signature block is left blank.

Further correspondence with respect to this matter should be addressed as follows:

By mail: Mail Stop PETITION
Commissioner for Patents
Post Office Box 1450
Alexandria, VA 22313-1450

By hand: U.S. Patent and Trademark Office
Customer Service Window, Mail Stop Petition
Randolph Building
401 Dulany Street
Alexandria, VA 22314

By FAX: (703) 872-9306 – ATTN: Office of Petitions

Telephone inquiries should be directed to the undersigned at (571) 272-3230.

E. Shirene Willis
Senior Petitions Attorney
Office of Petitions

UNITED STATES PATENT AND TRADEMARK OFFICE

Commissioner for Patents
United States Patent and Trademark Office
P.O. Box 1450
Alexandria, VA 22313-1450
www.uspto.gov

KNOBBE MARTENS OLSON & BEAR LLP
2040 MAIN STREET
FOURTEENTH FLOOR
IRVINE CA 92614

COPY MAILED

APR 28 2005

OFFICE OF PETITIONS

In re Application of
Satoh, et al.
Application No.: 10/928,517
Filed: August 27, 2004
Attorney Docket No.: ASMJP1.154AUS
For: SOURCE GAS FLOW CONTROL AND CVD USING SAME

DECISION ACCORDING STATUS UNDER 37 CFR 1.47(a)

This is a decision on the reconsideration petition under 37 CFR 1.47(a), filed March 21, 2005 (certificate of mailing date March 18, 2005).

The petition is granted.

Petitioners have shown that the non-signing inventor, Hak Ju Lee, has constructively refused to join in the filing of the above-identified application after having been presented with the application papers. Specifically, the declaration/statement of facts of Kazue Fujiya establishes that the non-signing inventor was mailed the application papers, including the specification, claims and drawings, but failed to respond to the request that he sign the declaration. Petitioners have submitted a declaration in compliance with 37 CFR 1.63 and 1.64.

This application and papers have been reviewed and found in compliance with 37 CFR 1.47(a). This application is hereby accorded Rule 1.47(a) status.

As provided in Rule 1.47(c), this Office will forward notice of this application's filing to the non-signing inventor at the address given in the petition. Notice of the filing of this application will also be published in the Official Gazette.

After this decision is mailed, the above-identified application will be forwarded to Technology Center A.U. 2812 for examination in due course.

Telephone inquiries should be directed to the undersigned at (571) 272-3230.

E. Shirene Willis

E. Shirene Willis
Senior Petitions Attorney
Office of Petitions

UNITED STATES PATENT AND TRADEMARK OFFICE

Commissioner for Patents
United States Patent and Trademark Office
P.O. Box 1450
Alexandria, VA 22313-1450
www.uspto.gov

HAK JU LEE
1-1-1 OSAKI
SHINAGAWA-KU, TOKYO
JAPAN

COPY MAILED

APR 28 2005

OFFICE OF PETITIONS

In re Application of
Satoh, et al.
Application No.: 10/928,517
Filed: August 27, 2004
Attorney Docket No.: ASMJP1.154AUS
For: SOURCE GAS FLOW CONTROL AND CVD USING SAME

LETTER

Dear Mr. Lee:

You are named as a joint inventor in the above identified United States patent application, filed under the provisions of 35 U.S.C. 116 (United States Code), and 37 CFR 1.47(a), Rules of Practice in Patent Cases. Should a patent be granted on the application you will be designated therein as a joint inventor.

As a named inventor you are entitled to inspect any paper in the file wrapper of the application, order copies of all or any part thereof (at a prepaid cost per 37 CFR 1.19) or make your position of record in the application. Alternatively, you may arrange to do any of the preceding through a registered patent attorney or agent presenting written authorization from you. If you care to join the application, counsel of record (see below) would presumably assist you. Joining in the application would entail the filing of an appropriate oath or declaration by you pursuant to 37 CFR 1.63.

Requests for information regarding your application should be directed to the File Information Unit at (703)308-2733. Information regarding how to pay for and order a copy of the application, or a specific paper in the application, should be directed to Certification Division at (703)308-9726 or 1(800)972-6382 (outside the Washington D.C. area).

Telephone inquiries regarding this communication should be directed to the undersigned at (571) 272-3230.

E Shirene Willis

E. Shirene Willis
Senior Petitions Attorney
Office of Petitions

ATTORNEY OF RECORD: KNOBBE MARTENS OLSON & BEAR LLP
2040 MAIN STREET
FOURTEENTH FLOOR
IRVINE CA 92614

UNITED STATES PATENT AND TRADEMARK OFFICE

UNITED STATES DEPARTMENT OF COMMERCE
United States Patent and Trademark Office
Address: COMMISSIONER FOR PATENTS
P.O. Box 1450
Alexandria, Virginia 22313-1450
www.uspto.gov

APPLICATION NO.	FILING DATE	FIRST NAMED INVENTOR	ATTORNEY DOCKET NO.	CONFIRMATION NO.
10/928,540	08/27/2004	Norbert Moszner	20959/2360 (P 66165)	3514

7590 01/14/2009

Joseph M. Noto
Nixon Peabody LLP
1100 Clinton Square
Rochester, NY 14604

EXAMINER
PEPITONE, MICHAEL F

ART UNIT	PAPER NUMBER
1796	

MAIL DATE	DELIVERY MODE
01/14/2009	PAPER

Please find below and/or attached an Office communication concerning this application or proceeding.

The time period for reply, if any, is set in the attached communication.

UNITED STATES PATENT and TRADEMARK OFFICE

COMMISSIONER FOR PATENTS
UNITED STATES PATENT AND TRADEMARK OFFICE
P.O. BOX 1450
ALEXANDRIA, VA 23313-1450
WWW.USPTO.GOV

Mailed: 1/14/09

In re Application of Mosner et al.
Serial No.: 10/928,540
Filed: August 27, 2004

DECISION ON PETITION UNDER *37 CFR 1.48(a)*

Title: DENTAL COATING MATERIALS

This is a decision on the PETITION TO CORRECT INVENTORSHIP IN A NON-PROVISIONAL PATENT APPLICATION filed August 4, 2005 to correct inventorship under 37 CFR 1.48(a) by adding the name of Rolf Mülhaupt to the list of inventors of the instant application.

It is noted that the applicant has met the requirements of 37 C.F.R. § 1.48(a) by (1) submitting a request to correct the inventorship that sets forth the desired inventorship change; (2) providing a statement from each person being added as an inventor that the error in inventorship occurred without deceptive intention on his or her part; (3) providing a declaration of the actual inventors as required by 37 C.F.R. § 1.63; (4) providing the processing fee set forth in 1.17(i); and, (5) providing the written consent of the assignee.

The request is **GRANTED**.

The application file is being forwarded to the appropriate section of the Patent and Trademark Office for correction of the record.

Mark Eashoo
Supervisory Patent Examiner
Art Unit 1796
Technology Center 1700

NIXON PEABODY LLP
Clinton Square, P.O. Box 31051
Rochester, New York 14603-1051

UNITED STATES PATENT AND TRADEMARK OFFICE

Commissioner for Patents
United States Patent and Trademark Office
P.O. Box 1450
Alexandria, VA 22313-1450
www.uspto.gov

KYOCERA WIRELESS CORP.
P.O. BOX 928289
SAN DIEGO CA 92192-8289

MAILED

JAN 29 2009

OFFICE OF PETITIONS

In re Application of	:	
Tommy Le	:	
Application No. 10/928,546	:	DECISION ON PETITION
Filed: August 26, 2004	:	
Attorney Docket No. UTL 00325	:	

This is a decision on the paper filed January 2, 2009, entitled: "Petition under 1.181 to Obtain a Refund for Unintended, Duplicate Application filed via EFS-Web, which is only being treated as a request for refund of a duplicate payment of $810 on January 18, 2008, for a Request for Continued Examination (RCE).

The request is **Granted.**

Office finance records indicate that a duplicate payment of $810 for a Request for Continued Examination (RCE) was charged to petitioner's credit card account on January 18, 2008. Therefore, a total of $810 is being credited to petitioner's credit card account.

Additionally, applicant's statement in the instant request which states: "Additionally, applicant hereby requests that EFS-ID number: 2738712 to be **closed**" is not clear.

Telephone inquiries concerning this decision should be directed to the undersigned at (571) 272-3208.

Karen Creasy

Karen Creasy
Petitions Examiner
Office of Petitions

UNITED STATES PATENT AND TRADEMARK OFFICE

Commissioner for Patents
United States Patent and Trademark Office
P.O. Box 1450
Alexandria, VA 22313-1450
www.uspto.gov

Sheldon Mak Rose & Anderson PC
100 East Corson Street
Third Floor
Pasadena, CA 91103-3842

COPY MAILED

AUG 20 2007

OFFICE OF PETITIONS

In re Application of	:	
James Kevin Brannon	:	
Application No. 10/928,553	:	DECISION ON PETITION
Filed: August 26, 2004	:	TO WITHDRAW
Attorney Docket No. 14738-1	:	FROM RECORD
	:	

This is a decision on the Request to Withdraw as attorney or agent of record under 37 C.F.R. § 1.36(b), filed April 24, 2007.

The request is **NOT APPROVED** as moot.

A review of the file record indicates that the power of attorney to Sheldon Mak Rose & Anderson PC has been revoked by the applicant of the patent application on July 2, 2007. Accordingly, the request to withdraw under 37 C.F.R. § 1.36(b) is moot.

All future communications from the Office will continue to be directed to the below-listed address until otherwise notified by applicant.

Telephone inquires concerning this decision should be directed to Terri Williams at 571-272-2991.

T. Williams
Terri Williams
Petitions Examiner
Office of Petitions

cc: **Intellectual Property Center, LLC**
9233 Ward Parkway
Suite 100
Kansas City, MO 64114

UNITED STATES PATENT AND TRADEMARK OFFICE

Commissioner for Patents
United States Patent and Trademark Office
P.O. Box 1450
Alexandria, VA 22313-1450
www.uspto.gov

INTELLECTUAL PROPERTY CENTER, LLC
9233 WARD PARKWAY
SUITE 100
KANSAS CITY MO 64114

COPY MAILED

SEP 30 2008

OFFICE OF PETITIONS

In re Application of
Brannon
Application No. 10/928,553
Filed: August 26, 2004
Attorney Docket No. 14738-1

DECISION ON PETITION

This is a decision on the petition under the unintentional provisions of 37 CFR 1.137(b), filed September 10, 2008, to revive the above-identified application.

The petition is GRANTED.

This application became abandoned August 7, 2008 for failure to submit corrected formal drawings as required by the Notice of Allowability (Notice) mailed May 6, 2008. The Notice set a three month statutory period of time for reply. Notice of Abandonment was mailed August 29, 2008.

The petition satisfies the requirements of 37 CFR 1.137(b) in that petitioner has supplied (1) the corrected formal drawings, (2) the required petition fee; and (3) a proper statement of unintentional delay.

Telephone inquiries concerning this decision should be directed to the undersigned at (571) 272-3205.

This application is being referred to Publishing Division for further processing.

Alesia M. Brown
Petitions Attorney
Office of Petitions

UNITED STATES PATENT AND TRADEMARK OFFICE

Commissioner for Patents
United States Patent and Trademark Office
P.O. Box 1450
Alexandria, VA 22313-1450
www.uspto.gov

GLENN P. RICKARDS
DOWREY RICKARDS PLLC
SUITE 106
19119 NORTH CREEK PARKWAY
BOTHELL WA 98011

COPY MAILED
DEC 0 8 2008

In re Application of	:	
ARICK, Thomas P.	:	
Application No. 10/928,554	:	DECISION ON PETITION
Filed: August 26, 2004	:	TO WITHDRAW
Attorney Docket No. **12-28-101**	:	FROM RECORD
	:	

This is a decision on the Request to Withdraw as attorney or agent of record under 37 C.F.R. § 1.36(b), filed November 07, 2008.

The request is **APPROVED**.

A grantable request to withdraw as attorney/agent of record must be signed by every attorney/agent seeking to withdraw or contain a clear indication that one attorney is signing on behalf of another/others. The Office requires the practitioner(s) requesting withdrawal to certify that he, she, or they have: (1) given reasonable notice to the client, prior to the expiration of the response period, that the practitioner(s) intends to withdraw from employment; (2) delivered to the client or a duly authorized representative of the client all papers and property (including funds) to which the client is entitled; and (3) notified the client of any responses that may be due and the time frame within which the client must respond, pursuant 37 CFR 10.40(c).

The request was signed by Carl Dowrey, the sole attorney of record. Carl Dowrey Smith has been withdrawn as attorneys or agents of record.

All future correspondence will be directed to the first inventor Thomas Arick at the address indicated below.

Telephone inquiries concerning this decision should be directed to Tredelle Jackson at 571-272-2783.

Tredelle D. Jackson
Paralegal Specialist
Office of Petitions

cc: **THOMAS P. ARICK**
17208 NE 45TH STREET #66
REDMOND WA 98052

cc: **GLENN RICKARDS**
15100 SE 38TH ST. PMB 780
BELLEVUE, WA 98006

UNITED STATES PATENT AND TRADEMARK OFFICE

Commissioner for Patents
United States Patent and Trademark Office
P.O. Box 1450
Alexandria, VA 22313-1450
www.uspto.gov

DUCKOR SPRADLING METZGER & WYNNE
A LAW CORPORATION
3043 4th Ave.
SAN DIEGO CA 92103

COPY MAILED

JAN 1 1 2008

OFFICE OF PETITIONS

In re Application of	:	
John V. Smith et al.	:	
Application No. 10/928,577	:	ON PETITION
Filed: August 27, 2004	:	
	:	

This is a decision on the petition under 37 CFR 1.137(b), filed November 19, 2007, to revive the above-identified application.

The petition is **DISMISSED**.

Any request for reconsideration of this decision must be submitted within TWO (2) MONTHS from the mail date of this decision. Extensions of time under 37 CFR 1.136(a) are permitted. The reconsideration request should include a cover letter entitled "Renewed Petition under 37 CFR 1.137(b)." This is **not** a final agency action within the meaning of 5 U.S.C. § 704.

The above-identified application became abandoned for failure to submit the issue fee in a timely manner in reply to the Notice of Allowance mailed September 7, 2005 which set a shortened statutory period for reply of three (3) months. Accordingly, by operation of law, the above-identified application became abandoned on December 8, 2005.

A grantable petition under 37 CFR 1.137(b) must be accompanied by: (1) the required reply, unless previously filed; (2) the petition fee as set forth in 37 CFR 1.17(m); (3) a statement that the entire delay in filing the required reply from the due date for the reply until the filing of a grantable petition pursuant to 37 CFR 1.137(b) was unintentional; and (4) any terminal disclaimer (and fee as set forth in 37 CFR 1.20(d)) required by 37 CFR 1.137(d). Where there is a question as to whether either the abandonment or the delay in filing a petition under 37 CFR 1.137 was unintentional, the Commissioner may require additional information. See MPEP 711.03(c)(II)(C) and (D). The instant petition lacks item(s) (1) and (2). The check included with the petition was returned for insufficient funds.

It is not apparent whether the person signing the statement of the unintentional delay was in a position to have firsthand knowledge of the facts and circumstances of the delay at issue. Nevertheless, such statement is being treated as having been made as the result of a reasonable inquiry into the facts and circumstances of such delay. See 37 CFR 10.18(b) and Changes to Patent Practice and Procedure; Final rule Notice, 62 Fed. Reg. 53131, 53178 (October 10, 1997), 1203 Off. Gaz. Pat. Office 63, 103 (October 21, 1997). In the event that such an inquiry has not been made, petitioner must make such an inquiry. If such inquiry results in the discovery that it is not correct that the entire delay in filing the required reply from the due date for the reply until the filing of a grantable petition pursuant of 37 CFR 1.137(b) was unintentional, petitioner must notify the Office.

Filed concurrently with this petition is a request for change in power of attorney. The request is not approved as the required statement under 37 CFR 3.73(b) is incomplete. Applicant has not indicated the Reel and Frame numbers of the assignments as required in a statement under 37 CFR 3.73(b).

All future communication from the Office will continue to be directed to the address of record until otherwise notified by applicant. A courtesy copy of this decision is being mailed to the address given on the petition.

Further correspondence with respect to this matter should be addressed as follows:

By Mail: Mail Stop PETITION
Commissioner for Patents
P. O. Box 1450
Alexandria, VA 22313-1450

By hand: U. S. Patent and Trademark Office
Customer Service Window, Mail Stop Petitions
Randolph Building
401 Dulany Street
Alexandria, VA 22314

The centralized facsimile number is **(571) 273-8300.**

Telephone inquiries concerning this decision should be directed to the Carl Friedman at (571) 272-6842.

David Bucci
Petitions Examiner
Office of Petitions

Cc: Gary L. Eastman
707 Broadway Street, Suite 1800
San Diego, CA 92101

UNITED STATES PATENT AND TRADEMARK OFFICE

UNITED STATES DEPARTMENT OF COMMERCE
United States Patent and Trademark Office
Address: COMMISSIONER FOR PATENTS
P.O. Box 1450
Alexandria, Virginia 22313-1450
www.uspto.gov

SQUIRE, SANDERS & DEMPSEY LLP
1 MARITIME PLAZA
SUITE 300
SAN FRANCISCO, CA 94111

Mail Date: 07/26/2010

Applicant	: Syed F.A. Hossainy	: DECISION ON REQUEST FOR
Patent Number	: 7648727	: RECALCULATION of PATENT
Issue Date	: 01/19/2010	: TERM ADJUSTMENT IN VIEW
Application No	: 10/928,587	: OF WYETH AND NOTICE OF INTENT TO
Filed	: 08/26/2004	: ISSUE CERTIFICATE OF CORRECTION
		:

The Request for Recalculation is **GRANTED** to the extent indicated.

The patent term adjustment has been determined to be **1542** days. The USPTO will *sua sponte* issue a certificate of correction reflecting the amount of PTA days determined by the recalculation.

Prior to the issuance of the certificate of correction, the USPTO will afford patentee an opportunity to be heard and request reconsideration. Accordingly, patentee has **one month or thirty (30) days**, whichever is longer, to file a request for reconsideration of this patent term adjustment calculation. See 35 U.S.C. 154(b)(3)(B)(ii) and 37 CFR 1.322(a)(4). No extensions of time will be granted under 37 CFR 1.136.

Patentee should use document code PET.OP if electronically filing a request for reconsideration of this patent term adjustment calculation. The patentee must also include the information required by 37 CFR 1.705(b)(2) and the fee required by 37 CFR 1.18(e). If patentee does not file a timely request for reconsideration of this patent term adjustment calculation including the information required by 37 CFR 1.705(b)(2) and the fee required by 37 CFR 1.18(e), the USPTO will issue a certificate of correction reflecting the PTA determination noted above.

Patentee should be aware that in order to preserve the right to review in the United States District Court for the District of Columbia of the USPTO patent term adjustment determination, patentee must ensure that he or she also take the steps required under 35 U.S.C. 154(b)(4)(A) in a timely manner. Nothing in the request for recalculation should be construed as providing an alternative time frame for commencing a civil action under 35 U.S.C. 154(b)(4)(A).

Any questions concerning this decision should be directed to the Office of Patent Legal Administration at 571-272-7702.

UNITED STATES PATENT AND TRADEMARK OFFICE

Commissioner for Patents
United States Patent and Trademark Office
P.O. Box 1450
Alexandria, VA 22313-1450
www.uspto.gov

PERKINS COIE LLP
POST OFFICE BOX 1208
SEATTLE WA 98111-1208

MAILED

MAY 28 2009

OFFICE OF PETITIONS

In re Application :
David Dellinger et al. :
Application No. 10/928,602 : DECISION ON APPLICATION
Filed: August 26, 2004 : FOR PATENT TERM ADJUSTMENT
Attorney Docket No. **40134.8002.US02** :

This is in response to the "APPLICATION FOR PATENT TERM ADJUSTMENT RECONSIDERATION UNDER 37 C.F.R. § 1.705(B)" filed January 28, 2009. Applicant requests that the determination of patent term adjustment be corrected from three hundred forty-two (342) days to seven hundred sixty-five (765) days. Applicant requests this correction on the basis that the Office will take in excess of three years to issue this patent and in light of the recent court decision in Wyeth v. Dudas, No. 07-1492 (D.D.C. September 30, 2008).

As the instant application for patent term adjustment requests reconsideration of the patent term adjustment as it relates to the Office's failure to issue the patent within 3 years of the filing date, a decision is being **held in abeyance** until after the actual patent date. Knowledge of the actual date the patent issues is required to calculate the amount, if any, of additional patent term patentee is entitled to for Office failure to issue the patent within 3 years. See § 1.703(b).

Applicant is given TWO (2) MONTHS from the issue date of the patent to file a written request for reconsideration of the patent term adjustment for Office failure to issue the patent within 3 years. A copy of this decision should accompany the request. Applicant may seek such consideration without payment of an additional fee. However, as to all other bases for seeking reconsideration of the patent term adjustment indicated in the patent, all requirements of § 1.705(d) must be met. Requests for reconsideration on other bases must be timely filed and must include payment of the required fee.

Rather than file the request for reconsideration of Patent Term Adjustment at the time of the mailing of the notice of allowance, applicant is advised that they may wait until the time of the issuance of the patent and file a request for reconsideration of the patent term pursuant to 37 CFR 1.705(d). The USPTO notes that it does not calculate the

amount of time earned pursuant to 37 CFR 1.702(b) until the time of the issuance of the patent and accordingly, the Office will consider any request for reconsideration of the patent term adjustment due to an error in the calculation of 37 CFR 1.702(b) to be timely if the request for reconsideration is filed within two months of the issuance of the patent.

The Office acknowledges submission of the $200.00 fee set forth in 37 CFR 1.18(e). No additional fees are required.

The application is being forwarded to the Office of Data Management for issuance of the patent. The patent term adjustment indicated on the patent (as shown on the Issue Notification mailed about three weeks prior to patent issuance) will include any additional adjustment accrued both for Office delay in issuing the patent more than four months after payment of the issue fee and satisfaction of all outstanding requirements, and for the Office taking in excess of three years to issue the patent (to the extent that the three-year period does not overlap with periods already accorded).

Telephone inquiries specific to this decision should be directed to Senior Petitions Attorney Patricia Faison-Ball at (571) 272-3212.

Kery A. Fries
Senior Legal Advisor
Office of Patent Legal Administration
Office of Deputy Commissioner
for Examination Policy

UNITED STATES PATENT AND TRADEMARK OFFICE

Commissioner for Patents
United States Patent and Trademark Office
P.O. Box 1450
Alexandria, VA 22313-1450
www.uspto.gov

QUINE INTELLECTUAL PROPERTY LAW GROUP, P.C.
P O BOX 458
ALAMEDA, CA 94501

MAILED

MAR 18 2010

OFFICE OF PETITIONS

In re Patent No. 7,572,393	:	
Issued: August 11, 2009	:	
Application No. 10/928,625	:	NOTICE
Filed: August 26, 2004	:	
Attorney Docket No.: 40-002720US	:	

This is in response to the communication filed December 14, 2009, which is being treated as a request for acceptance of a fee deficiency submission under 37 CFR 1.28.

There is no indication that the person signing the instant communication was ever given a power of attorney or authorization of agent to prosecute the above-identified patent. However, in accordance with 37 CFR 1.34(a), the signature of Gary Baker appearing on the petition shall constitute a representation to the United States Patent and Trademark Office that he is authorized to represent the particular party on whose behalf he acts.

On September 1, 1998, the Court of Appeals for the Federal Circuit held that 37 CFR 1.28(c) is the sole provision governing the time for correction of the erroneous payment of the issue fee as a small entity. **See DH Technology v. Synergystex International, Inc. 154 F.3d 1333, 47 USPQ2d 1865 (Fed. Cir. Sept. 1, 1998).**

The Office no longer investigates or rejects original or reissue applications under 37 CFR 1.56. **1098 Off. Gaz. Pat. Office 502 (January 3, 1989)**. Therefore, nothing in this Notice is intended to imply that an investigation was done.

Your fee deficiency submission under 37 CFR 1.28 is hereby **ACCEPTED**.

This application no longer qualifies for small entity status. Accordingly, any future fees must be paid at the large entity rate.

Inquiries related to this communication should be directed to the Office of Petitions Staff at (571) 272-3282.

Sherry D. Brinkley
Petitions Examiner
Office of Petitions

UNITED STATES PATENT AND TRADEMARK OFFICE

UNITED STATES DEPARTMENT OF COMMERCE
United States Patent and Trademark Office
Address: COMMISSIONER FOR PATENTS
P.O. Box 1450
Alexandria, Virginia 22313-1450
www.uspto.gov

QUINE INTELLECTUAL PROPERTY LAW GROUP, P.C.
P O BOX 458
ALAMEDA, CA 94501

Mail Date: 04/21/2010

Applicant	: Jeffery A. Whiteford	: DECISION ON REQUEST FOR
Patent Number	: 7572393	: RECALCULATION of PATENT
Issue Date	: 08/11/2009	: TERM ADJUSTMENT IN VIEW
Appliction No	: 10/928,625	: OF WYETH AND NOTICE OF INTENT TO
Filed	: 08/26/2004	: ISSUE CERTIFICATE OF CORRECTION
		:

The Request for Recalculation is **GRANTED** to the extent indicated.

The patent term adjustment has been determined to be **1073** days. The USPTO will *sua sponte* issue a certificate of correction reflecting the amount of PTA days determined by the recalculation.

Prior to the issuance of the certificate of correction, the USPTO will afford patentee an opportunity to be heard and request reconsideration. Accordingly, patentee has **one month or thirty (30) days**, whichever is longer, to file a request for reconsideration of this patent term adjustment calculation. See 35 U.S.C. 154(b)(3)(B)(ii) and 37 CFR 1.322(a)(4). No extensions of time will be granted under 37 CFR 1.136.

Patentee should use document code PET.OP if electronically filing a request for reconsideration of this patent term adjustment calculation. The patentee must also include the information required by 37 CFR 1.705(b)(2) and the fee required by 37 CFR 1.18(e). If patentee does not file a timely request for reconsideration of this patent term adjustment calculation including the information required by 37 CFR 1.705(b)(2) and the fee required by 37 CFR 1.18(e), the USPTO will issue a certificate of correction reflecting the PTA determination noted above.

Patentee should be aware that in order to preserve the right to review in the United States District Court for the District of Columbia of the USPTO patent term adjustment determination, patentee must ensure that he or she also take the steps required under 35 U.S.C. 154(b)(4)(A) in a timely manner. Nothing in the request for recalculation should be construed as providing an alternative time frame for commencing a civil action under 35 U.S.C. 154(b)(4)(A).

Any questions concerning this decision should be directed to the Office of Patent Legal Administration at 571-272-7702.

UNITED STATES PATENT AND TRADEMARK OFFICE

Commissioner for Patents
United States Patent and Trademark Office
P.O. Box 1450
Alexandria, VA 22313-1450
www.uspto.gov

TOWNSEND AND TOWNSEND AND CREW, LLP
TWO EMBARCADERO CENTER, 8th FLOOR
SAN FRANCISCO, CA 94111-3834

COPY MAILED

SEP 25 2006

OFFICE OF PETITIONS

In re Application of	:	
JENKINS, et al.	:	
Application No. 10/928,631	:	DECISION ON PETITION
Filed: August 26, 2004	:	TO WITHDRAW
Attorney Docket No. 022224-000100US	:	FROM RECORD
	:	

This is a decision on the Request to Withdraw as attorney or agent of record under 37 C.F.R. § 1.36(b), filed May 22, 2006.

The request is **NOT APPROVED**.

A grantable request to withdraw as attorney/agent of record must be signed by every attorney/agent seeking to withdraw or contain a clear indication that one attorney is signing on behalf of another/others. A request to withdraw will not be approved unless at least 30 (thirty) days would remain between the date of approval and the later of the expiration date of a time to file a response or the expiration date of the maximum time period which can be extended under 37 C.F.R. § 1.136(a).

The Office cannot approve the request at this time since the reasons provided do not meet any of the conditions under the mandatory or permissive categories enumerated in 37 CFR 10.40. Section 10.40 of Title 37 of the Code of Federal Regulation states, "[a] practitioner shall not withdraw from employment in a proceeding before the Office without permission from the Office[.]" More specifically, 37 CFR 10.40 states, "[i]f paragraph (b) of this section is not applicable, a practitioner may not request permission to withdraw in matter pending before the Office unless such request or such withdrawal is" for one the permissive reasons listed in 37 CFR 10.40(c). The reasons set forth in the request, "client requests transfer of matter" does not meet any of the conditions set forth in 37 CFR 10.40.

In order to request or take action in a patent matter, the assignee must establish its ownership of the patent to the satisfaction of the Director. In this regard, a Statement under 37 CFR 3.73(b) must have either: (i) documentary evidence of a chain of title from the original owner to the assignee (*e.g.*, copy of an executed assignment), and a statement affirming that the documentary evidence of the chain of title from the original owner to the assignee was or concurrently is being

submitted for recordation pursuant to § 3.11; or (ii) a statement specifying where documentary evidence of a chain of title from the original owner to the assignee is recorded in the assignment records of the Office (*e.g.*, reel and frame number). The 37 CFR 3.73(b) statement filed January 7, 2005 is improper.

All future communications from the Office will continue to be directed to the above-listed address until otherwise notified by applicant.

Telephone inquiries concerning this decision should be directed to Monica A. Graves at 571-272-7253.

Amelia Au
Petitions Examiner
Office of Petitions

cc: M. Essam Badawi, CEO
PERCEPTIA DEVICES, INC.
200 Oak Creek Blvd.
Scotts Valley, CA 95066

UNITED STATES PATENT AND TRADEMARK OFFICE

COMMISSIONER FOR PATENTS
UNITED STATES PATENT AND TRADEMARK OFFICE
P.O. BOX 1450
ALEXANDRIA, VA 22313-1450
www.uspto.gov

Paper No.

REED SMITH LLP
P.O. BOX 488
PITTSBURGH PA 15230-0488

COPY MAILED

JAN 18 2007

OFFICE OF PETITIONS

In re Application of	:	
Baumgart et al.	:	
Application No. 10/928,657	:	DECISION ON
Filed: August 26, 2004	:	PETITION
Attorney Docket No. 04-233-US	:	

This is a decision on the PETITION TO WITHDRAW HOLDING OF ABANDONMENT PURSUANT TO 37 C.F.R. § 1.181 filed November 6, 2006.

The above-identified application became abandoned for failure to file a timely and proper reply to the non-final Office action mailed January 25, 2006. This Notice set a three month shortened statutory period for reply, with extensions of time obtainable under 37 CFR §1.136(a). No reply having been received and no extensions obtained, the above-identified application became abandoned effective April 26, 2006. A courtesy Notice of Abandonment was mailed on September 6, 2006.

In response, applicants filed the instant petition, asserting that the Office action was never received and requesting that the holding of abandonment be withdrawn.

The petition includes a statement from the practitioner stating that the Office communication was not received by the practitioner and attesting to the fact that a search of the file jacket and docket records indicates that the Office communication was not received. In addition, the petition includes a copy of the docket record where the non-received

Office communication would have been entered had it been received and docketed must be attached to and referenced in practitioner's statement. Furthermore, a review of the application file suggests an irregularity in the mailing of the Office action. Although mailed to the correspondence address of record, it was returned to the Office by the postal service.

In view thereof, the notice of abandonment mailed September 6, 2006 is hereby **VACATED**, and the holding of abandonment is hereby **WITHDRAWN**.

The petition under § 1.181 is **GRANTED**.

No fee is required on petition under § 1.181.

Technology Center AU 2838 has been advised of this decision. The application file is, thereby, forwarded to the Technology Center's technical support staff to withdraw the holding of abandonment and for re-mailing of the non-final Office action mailed January 25, 2006 and for restarting of the period for reply.

Telephone inquiries related to this decision should be directed to the undersigned at (571) 272-3219.

Nancy Johnson
Senior Petitions Attorney
Office of Petitions

UNITED STATES PATENT AND TRADEMARK OFFICE

COMMISSIONER FOR PATENTS
UNITED STATES PATENT AND TRADEMARK OFFICE
P.O. BOX 1450
ALEXANDRIA, VA 22313-1450
www.uspto.gov

Vani Moodley
Blakely, Sokoloff, Taylor & Zafman, LLP
Seventh Floor
12400 Wilshire Boulevard
Los Angeles, CA 90025-1026

COPY MAILED
MAR 3 1 2006
OFFICE OF PETITIONS

In re Application of	:	
Ashok Mitter Khosla	:	
Application No. 10/928,684	:	ON PETITION
Filed: August 26, 2004	:	
Attorney Docket No. 000011.P005	:	

This is a decision on the petition under 37 CFR 1.137(b), filed February 3, 2006, to revive the above-identified application.

The application became abandoned for failure to reply in a timely manner to the Notice to File Missing Parts of Nonprovisional Application mailed March 25, 2005. A Notice of Abandonment was mailed on December 6, 2005.

The petition satisfies the requirements of 37 CFR 1.137(b) in that petitioner has supplied (1) the reply in the form of an executed Oath/Declaration along with the $65 surcharge; (2) the petition fee of $750; and (3) an adequate statement of unintentional delay. Therefore, the petition is **GRANTED**.

The file does not indicate a change of address has been submitted, although the address given on the petition differs from the address of record. If appropriate, a change of address should be filed in accordance with MPEP 601.03. A courtesy copy of this decision is being mailed to the address given on the petition; however, the Office will mail all future correspondence solely to the address of record.

The application file is being referred to the Office of Initial Patent Examination for further processing.

Telephone inquiries concerning this decision should be directed to the undersigned at (571) 272-3226.

Andrea Smith
Petitions Examiner
Office of Petitions

cc: Vani Moodley
800 W El Camino Real
Mountain View, CA 95040

UNITED STATES PATENT AND TRADEMARK OFFICE

Commissioner for Patents
United States Patent and Trademark Office
P.O. Box 1450
Alexandria, VA 22313-1450
www.uspto.gov

HARMAN – BRINKS HOFER CHICAGO
BRINKS HOFER GILSON & LIONE
P.O. BOX 10395
CHICAGO, IL 60610

MAILED

APR 13 2010

OFFICE OF PETITIONS

In re Application of :
Darrin Fry et al :
Application No. 10/928,698 :
Filed: August 30, 2004 :
Attorney Docket No. 11336/1055 (P04129US)

ON PETITION

This is a decision on the petition, filed April 9, 2010 under 37 CFR 1.313(c)(2) to withdraw the above-identified application from issue after payment of the issue fee.

The petition is **GRANTED**.

The above-identified application is withdrawn from issue for consideration of a submission under 37 CFR 1.114 (request for continued examination). See 37 CFR 1.313(c)(2).

Petitioner is advised that the issue fee paid on March 18, 2010 in the above-identified application cannot be refunded. If, however, the above-identified application is again allowed, petitioner may request that it be applied towards the issue fee required by the new Notice of Allowance.[1]

Telephone inquiries should be directed to Irvin Dingle at (571) 272-3210.

This matter is being referred to Technology Center AU 2628 for processing of the request for continued examination under 37 CFR 1.114 and for consideration of the concurrently filed Information Disclosure Statement.

/Irvin Dingle/
Irvin Dingle
Petitions Examiner
Office of Petitions

[1] The request to apply the issue fee to the new Notice may be satisfied by completing and returning the new Issue Fee Transmittal Form PTOL-85(b), which includes the following language thereon: Commissioner for Patents is requested to apply the Issue Fee and Publication Fee (if any) or re-apply any previously paid issue fee to the application identified above. Petitioner is advised that, whether a fee is indicated as being due or not, the Issue Fee Transmittal Form **must** be completed and timely submitted to avoid abandonment. Note the language in bold text on the first page of the Notice of Allowance and Fee(s) Due (PTOL-85).

UNITED STATES PATENT AND TRADEMARK OFFICE

Commissioner for Patents
United States Patent and Trademark Office
P.O. Box 1450
Alexandria, VA 22313-1450
www.uspto.gov

HARMAN – BRINKS HOFER CHICAGO
BRINKS HOFER GILSON & LIONE
P.O. BOX 10395
CHICAGO, IL 60610

MAILED

APR 15 2010

OFFICE OF PETITIONS

In re Application of
Darrin Fry et al
Application No. 10/928,698
Filed: August 30, 2004
Attorney Docket No. 11336/1055 (P04129US)

ON PETITION

This is a decision on the petition, filed April 9, 2010 under 37 CFR 1.313(c)(2) to withdraw the above-identified application from issue after payment of the issue fee.

The petition is **GRANTED**.

The above-identified application is withdrawn from issue for consideration of a submission under 37 CFR 1.114 (request for continued examination). See 37 CFR 1.313(c)(2).

Petitioner is advised that the issue fee paid on March 18, 2010 in the above-identified application cannot be refunded. If, however, the above-identified application is again allowed, petitioner may request that it be applied towards the issue fee required by the new Notice of Allowance.[1]

Telephone inquiries should be directed to Irvin Dingle at (571) 272-3210.

This matter is being referred to Technology Center AU 2628 for processing of the request for continued examination under 37 CFR 1.114 and for consideration of the concurrently filed Information Disclosure Statement.

/Irvin Dingle/
Irvin Dingle
Petitions Examiner
Office of Petitions

[1] The request to apply the issue fee to the new Notice may be satisfied by completing and returning the new Issue Fee Transmittal Form PTOL-85(b), which includes the following language thereon: Commissioner for Patents is requested to apply the Issue Fee and Publication Fee (if any) or re-apply any previously paid issue fee to the application identified above. Petitioner is advised that, whether a fee is indicated as being due or not, the Issue Fee Transmittal Form **must** be completed and timely submitted to avoid abandonment. Note the language in bold text on the first page of the Notice of Allowance and Fee(s) Due (PTOL-85).

UNITED STATES PATENT AND TRADEMARK OFFICE

COMMISSIONER FOR PATENTS
UNITED STATES PATENT AND TRADEMARK OFFICE
P.O. BOX 1450
ALEXANDRIA, VA 22313-1450
www.uspto.gov

KNOBBE MARTENS OLSON & BEAR LLP
2040 MAIN STREET
FOURTEENTH FLOOR
IRVINE , CA 92614

COPY MAILED

APR 08 2008

OFFICE OF PETITIONS

In re Application of :
Daijiro Tanaka, et al. :
Application No.: 10/928,711 :
Filed: August 27, 2004 :
Attorney Docket No.: NGBC1.001C1 :

ON PETITION

This is a decision on the petition, filed April 7, 2008, under 37 CFR 1.313(c)(2) to withdraw the above-identified application from issue after payment of the issue fee.

The petition is **GRANTED**.

The above-identified application is withdrawn from issue for consideration of a submission under 37 CFR 1.114 (request for continued examination). See 37 CFR 1.313(c)(2).

Petitioner is advised that the issue fee paid on February 28, 2008, cannot be refunded. If, however, this application is again allowed, petitioner may request that it be applied towards the issue fee required by the new Notice of Allowance.[1]

Telephone inquiries relating to this decision should be directed to the undersigned at (571) 272-3204.

The application is being referred to Technology Center AU 3747 for further processing of the request for continued examination under 37 CFR 1.114 and for consideration of the concurrently filed Information Disclosure Statement (IDS).

Sherry D. Brinkley
Petitions Examiner
Office of Petitions

[1] *The request to apply the issue fee to the new Notice may be satisfied by completing and returning the new Part B - Fee(s) Transmittal Form (along with any balance due at the time of submission). Petitioner is advised that the Issue Fee Transmittal Form must be completed and timely submitted to avoid abandonment of the application.*

UNITED STATES PATENT AND TRADEMARK OFFICE

Commissioner for Patents
United States Patent and Trademark Office
P.O. Box 1450
Alexandria, VA 22313-1450
www.uspto.gov

TOWNSEND AND TOWNSEND AND CREW, LLP
TWO EMBARCADERO CENTER
EIGHTH FLOOR
SAN FRANCISCO CA 94111-3834

COPY MAILED

MAY 3 1 2005

OFFICE OF PETITIONS

In re Application of	:
Wang, et al.	:
Application No. 10/928,716	: DECISION ACCORDING STATUS
Filed: August 26, 2004	: UNDER 37 CFR 1.47(a)
Attorney Docket No. 021653-000300US	:
For: METHOD FOR REPAIRING PLASMA DAMAGE AFTER SPACER FORMATION FOR INTEGRATED CIRCUIT DEVICES	:

This is in response to the petition under 37 CFR 1.47(a), filed May 9, 2005 (certificate of mailing date May 5, 2005).

The petition is granted.

Petitioners has shown that the non-signing inventor, Yan-Shi Tian, has constructively refused to join in the filing of the above-identified application after having been presented with the application papers. Specifically, the declaration/statement of facts of Attorney Richard T. Ogawa establishes that the inventor was twice successfully mailed the application papers, including the specification, claims and drawings, and he twice failed to respond to the requests that he sign and return the enclosed declaration. Petitioners have submitted a declaration in compliance with 37 CFR 1.63 and 1.64. Regarding fees, the current fee due for filing a petition under 37 CFR 1.47(a) is $200.00. Petitioners specified only $130.00 for the petition fee. Nevertheless, pursunt to petitioners' authorization, petitioners' deposit account was charged the full $200.00 due.

This application and papers have been reviewed and found in compliance with 37 CFR 1.47(a). This application is hereby accorded Rule 1.47(a) status.

As provided in Rule 1.47(c), this Office will forward notice of this application's filing to the non-signing inventor at the address given in the petition. Notice of the filing of this application will also be published in the Official Gazette.

After this decision is mailed, the above-identified application will be returned to the Office of Initial Patent Examination for further processing. Petitioners are reminded that replacement drawings still must be submitted by May 26, 2005 in order to avoid abandonment of this application.

Telephone inquiries should be directed to the undersigned at (571) 272-3230.

E. Shirene Willis

E. Shirene Willis
Senior Petitions Attorney
Office of Petitions

UNITED STATES PATENT AND TRADEMARK OFFICE

Commissioner for Patents
United States Patent and Trademark Office
P.O. Box 1450
Alexandria, VA 22313-1450
www.uspto.gov

YAN-SHI TIAN
165 DONGCHUN ROAD
SHUANGLIAO CITY, JILIN PROVINCE
CHINA

COPY MAILED

MAY 3 1 2005

OFFICE OF PETITIONS

In re Application of :
Wang, et al. :
Application No. 10/928,716 : LETTER
Filed: August 26, 2004 :
Attorney Docket No. 021653-000300US :
For: METHOD FOR REPAIRING PLASMA :
DAMAGE AFTER SPACER FORMATION FOR
INTEGRATED CIRCUIT DEVICES

Dear Mr. Tian:

You are named as a joint inventor in the above identified United States patent application, filed under the provisions of 35 U.S.C. 116 (United States Code), and 37 CFR 1.47(a), Rules of Practice in Patent Cases. Should a patent be granted on the application you will be designated therein as a joint inventor.

As a named inventor you are entitled to inspect any paper in the file wrapper of the application, order copies of all or any part thereof (at a prepaid cost per 37 CFR 1.19) or make your position of record in the application. Alternatively, you may arrange to do any of the preceding through a registered patent attorney or agent presenting written authorization from you. If you care to join the application, counsel of record (see below) would presumably assist you. Joining in the application would entail the filing of an appropriate oath or declaration by you pursuant to 37 CFR 1.63.

Requests for information regarding your application should be directed to the File Information Unit at (703)308-2733. Information regarding how to pay for and order a copy of the application, or a specific paper in the application, should be directed to Certification Division at (703)308-9726 or 1(800)972-6382 (outside the Washington D.C. area).

Telephone inquiries regarding this communication should be directed to the undersigned at (571) 272-3230.

E. Shirene Willis

E. Shirene Willis
Senior Petitions Attorney
Office of Petitions

ATTORNEY OF RECORD: TOWNSEND AND TOWNSEND AND CREW, LLP
TWO EMBARCADERO CENTER
EIGHTH FLOOR
SAN FRANCISCO CA 94111-3834

UNITED STATES PATENT AND TRADEMARK OFFICE

COMMISSIONER FOR PATENTS
UNITED STATES PATENT AND TRADEMARK OFFICE
P.O. BOX 1450
ALEXANDRIA, VA 22313-1450
www.uspto.gov

Sierra Paten Group, LTD.
1663 Hwy. 395, Suite 201
Minden, NV 89423

COPY MAILED

FEB 14 2008

OFFICE OF PETITIONS

In re Application of
Samuel Louis Paul
Application No. 10/928,719
Filed: August 26, 2004
Attorney Docket No. NEXT-008

DECISION ON PETITION
TO WITHDRAW
FROM RECORD

This is a decision on the Request to Withdraw as attorney or agent under 37 C.F.R. § 1.36(b) or 37 C.F.R. § 10.40 filed January 29, 2008.

The request is **APPROVED**.

A grantable request to withdraw as attorney/agent of record must be signed by every attorney/agent seeking to withdraw or contain a clear indication that one attorney is signing on behalf of another/others. A request to withdraw will not be approved unless at least 30 (thirty) days would remain between the date of approval and the later of the expiration date of a time to file a response or the expiration date of the maximum time period which can be extended under 37 C.F.R. § 1.136(a).

The request was signed by Michael P. Artemis on behalf of all attorneys/agents of record. All attorneys/agents have been withdrawn.

The request to change the correspondence address has been changed and is copied below.

Applicant is reminded that there is no attorney of record at this time.

A final rejection was mailed on November 1, 2007.

Telephone inquires concerning this decision should be directed to Kimberly Inabinet at 571-272-4618.

Kimberly Inabinet
Petitions Examiner
Office of Petitions

cc: Samuel Paul
NEXTEP
P.O. Box 11188
Reno, NV 89510

UNITED STATES PATENT AND TRADEMARK OFFICE

UNITED STATES DEPARTMENT OF COMMERCE
United States Patent and Trademark Office
Address: COMMISSIONER FOR PATENTS
P.O. Box 1450
Alexandria, Virginia 22313-1450
www.uspto.gov

APPLICATION NUMBER	FILING OR 371(C) DATE	FIRST NAMED APPLICANT	ATTY. DOCKET NO./TITLE
10/928,719	08/26/2004	Samuel Louis Paul	NEXT-008

CONFIRMATION NO. 2095

POWER OF ATTORNEY NOTICE

28661
SIERRA PATENT GROUP, LTD.
1663 Hwy 395, Suite 201
Minden, NV 89423

OC000000028295751

Date Mailed: 02/13/2008

NOTICE REGARDING CHANGE OF POWER OF ATTORNEY

This is in response to the Power of Attorney filed 01/29/2008.

- The withdrawal as attorney in this application has been accepted. Future correspondence will be mailed to the new address of record. 37 CFR 1.33.

/kainabinet/

Office of Initial Patent Examination (571) 272-4000 or 1-800-PTO-9199

UNITED STATES PATENT AND TRADEMARK OFFICE

Commissioner for Patents
United States Patent and Trademark Office
P.O. Box 1450
Alexandria, VA 22313-1450
www.uspto.gov

OPTV/MOFO
C/O MORRISON & FOERSTER LLP
1650 TYSONS BOULEVARD, SUITE 300
MCLEAN, VA 22102

COPY MAILED
NOV 3 0 2006
OFFICE OF PETITIONS

In re Application of	:	
BENTING, et al.	:	
Application No. 10/928,727	:	DECISION ON PETITION
Filed: August 30, 2004	:	TO WITHDRAW
Attorney Docket No. 523812000100	:	FROM RECORD
	:	

This is a decision on the Request to Withdraw as attorney or agent of record under 37 C.F.R. § 1.36(b), filed September 01, 2006.

The request is **NOT APPROVED**.

A grantable request to withdraw as attorney/agent of record must be signed by every attorney/agent seeking to withdraw or contain a clear indication that one attorney is signing on behalf of another/others. A request to withdraw will not be approved unless at least 30 (thirty) days would remain between the date of approval and the later of the expiration date of a time to file a response or the expiration date of the maximum time period which can be extended under 37 C.F.R. § 1.136(a).

The Office cannot approve the request at this time since the reasons provided do not meet any of the conditions under the mandatory or permissive categories enumerated in 37 CFR 10.40. Section 10.40 of Title 37 of the Code of Federal Regulation states, "[a] practitioner shall not withdraw from employment in a proceeding before the Office without permission from the Office[.]" More specifically, 37 CFR 10.40 states, "[i]f paragraph (b) of this section is not applicable, a practitioner may not request permission to withdraw in matter pending before the Office unless such request or such withdrawal is" for one the permissive reasons listed in 37 CFR 10.40(c). While the reasons may be provided by referencing a specific portion of 37 CFR 10.40, the reasons must deal with actions by the client. The reasons set forth in the request, "Application is being transferred to another attorney," are not appropriate since it is not clear that the client initiated the transfer, or that the client knowingly or freely assents to the transfer to new counsel.

All future communications from the Office will continue to be directed to the above-listed address until otherwise properly notified by the applicant.

There is no outstanding Office action that requires a reply from the applicant.

Telephone inquiries concerning this decision should be directed to the undersigned at 571-272-6825.

Patricia Volpe
Petitions Examiner
Office of Petitions

cc: Marc Kaufman, Esq.
Nixon Peabody LLP
401 9th Street, N.W., Suite 900
Washington, D.C. 20004

UNITED STATES PATENT AND TRADEMARK OFFICE

Commissioner for Patents
United States Patent and Trademark Office
P.O. Box 1450
Alexandria, VA 22313-1450
www.uspto.gov

OPTV/MOFO
C/O MORRISON & FOERSTER LLP
1650 TYSONS BOULEVARD, SUITE 300
MCLEAN VA 22102

COPY MAILED

JUL 13 2007

OFFICE OF PETITIONS

In re Application of	:	
BENTING, et al.	:	
Application No. 10/928,727	:	DECISION ON PETITION
Filed: August 30, 2004	:	TO WITHDRAW
Attorney Docket No. **523812000100**	:	FROM RECORD
	:	

This is a decision on the renewed Request to Withdraw as attorney or agent of record under 37 C.F.R. § 1.36(b), filed January 17, 2007.

The request is **APPROVED**.

A grantable request to withdraw as attorney/agent of record must be signed by every attorney/agent seeking to withdraw or contain a clear indication that one attorney is signing on behalf of another/others. A request to withdraw will not be approved unless at least 30 (thirty) days would remain between the date of approval and the later of the expiration date of a time to file a response or the expiration date of the maximum time period which can be extended under 37 C.F.R. § 1.136(a).

The request was signed by Adam Keser on behalf of all attorneys of record. All attorneys/agents associated have been withdrawn. Applicant is reminded that there is no attorney of record at this time.

The request to change the correspondence of record is not acceptable as the requested correspondence address is not that of: (1) the first named signing inventor; or (2) an intervening assignee of the entire interest under 37 C.F.R 3.71. All future communications from the Office will be directed to the first named signing inventor at the first copied address below until otherwise properly notified by the applicant.

Telephone inquiries concerning this decision should be directed to the undersigned at 571-272-7253.

Monica A. Graves
Petitions Examiner
Office of Petitions

cc: **STEVEN BENTING**
25 RODEO AVENUE, APT 36
SAUSALITO, CA 94965

cc: **MARC KAUFMAN, ESQ.**
NIXON PEABODY LLP
401 9TH STREET NW, SUITE 900
WASHINGTON, DC 20004

UNITED STATES PATENT AND TRADEMARK OFFICE

Commissioner for Patents
United States Patent and Trademark Office
P.O. Box 1450
Alexandria, VA 22313-1450
www.uspto.gov

QUINE INTELLECTUAL PROPERTY LAW GROUP, P.C.
P.O. BOX 458
ALAMEDA, CA 94501

COPY MAILED

JUN 30 2005

OFFICE OF PETITIONS

In re Application of	:	
Shifan Cheng et al	:	
Application No. 10/928,755	:	ON PETITION
Filed: August 27, 2004	:	
Attorney Docket No. 318-001610US	:	

This is a decision on the petition under 37 CFR 1.137(b), filed May 27, 2005, to revive the above-identified application.

The petition is **GRANTED**.

The above-identified application became abandoned for failure to reply in a timely manner to the Notice to File Missing Parts of Nonprovisional Application (Notice) mailed October 22, 2004. The Notice set a period for reply of two (2) months from the mail date of the Notice. No extensions of time under the provisions of 37 CFR 1.136(a) were obtained. Accordingly, the above-identified application became abandoned on December 23, 2004.

Telephone inquiries concerning this decision should be directed to Irvin Dingle at (571) 272-3210.

This matter is being referred to the Initial Patent Examination Unit.

Irvin Dingle
Petitions Examiner
Office of Petitions
Office of the Deputy Commissioner
for Patent Examination Policy

UNITED STATES PATENT AND TRADEMARK OFFICE

Commissioner for Patents
United States Patent and Trademark Office
P.O. Box 1450
Alexandria, VA 22313-1450
www.uspto.gov

QUINE INTELLECTUAL PROPERTY LAW GROUP, P.C.
P O BOX 458
ALAMEDA CA 94501

COPY MAILED

SEP 28 2006

OFFICE OF PETITIONS

In re Application of	:
Cheng et al.	:
Application No. 10/928,755	: DECISION ON PETITION
Filed: August 27, 2004	: UNDER 37 CFR 1.78(a)(6)
Attorney Docket No. 318-001610US	:

This is a decision on the petition under 37 CFR 1.78(a)(6), filed April 3, 2006, to accept an unintentionally delayed claim under 35 U.S.C. § 119(e) for the benefit of priority to a prior-filed provisional application.

The petition is **DISMISSED.**

A petition under 37 CFR 1.78(a)(6) is only applicable to those applications filed on or after November 29, 2000. Further, the petition is appropriate only after expiration of the period specified in 37 CFR 1.78(a)(5)(ii) and must be filed during the pendency of the nonprovisional application. In addition, the petition must be accompanied by:

(1) the reference required by 35 U.S.C. § 119(e) and 37 CFR 1.78(a)(5)(i) to the prior-filed application, unless previously submitted;
(2) the surcharge set forth in § 1.17(t); and
(3) a statement that the entire delay between the date the claim was due under 37 CFR 1.78(a)(5)(ii) and the date the claim was filed was unintentional. The Director may require additional information where there is a question whether the delay was unintentional.

The petition does not satisfy item (1) above.

This pending nonprovisional application was filed on August 27, 2004, within twelve months of the filing date of the prior-filed provisional application, Application No. 60/500,917, which was filed on September 4, 2003, and for which priority is claimed. A reference to the prior-filed provisional application has been included in an amendment to the first sentence of the specification following the title.

However, the amendment is not acceptable as drafted since it improperly incorporates by reference the prior-filed application. An incorporation by reference statement added after an application's filing date is not effective because no new matter can be added to an application

after its filing date (*see* 35 U.S.C. § 132(a)). If an incorporation by reference statement is included in an amendment to the specification to add a benefit claim under 35 U.S.C. § 120 after the filing date of the application, the amendment would not be proper. When a benefit claim under 35 U.S.C. § 120 is submitted after the filing of an application, the reference to the prior application cannot include an incorporation by reference statement of the prior application. *See* Dart Industries v. Banner, 636 F.2d 684, 207 USPQ 273 (C.A.D.C. 1980). *Note* MPEP §§ 201.06(c) and 608.04(b).

Accordingly, before the petition under 37 CFR 1.78(a)(6) can be granted, a renewed petition under 37 CFR 1.78(a)(6) and either an Application Data Sheet or a substitute amendment (complying with 37 CFR 1.121 and 37 CFR 1.76(b)(5)) deleting the incorporation by reference statement, are required.

Further correspondence with respect to this matter should be addressed as follows:

By mail: Mail Stop PETITIONS
Commissioner for Patents
Post Office Box 1450
Alexandria, VA 22313-1450

By hand: Customer Service Window
Mail Stop Petitions
Randolph Building
401 Dulany Street
Alexandria, VA 22314

By fax: (571) 273-8300
ATTN: Office of Petitions

Any questions concerning this matter may be directed to Charlema Grant at (571) 272-3215.

Frances Hicks
Petitions Examiner
Office of Petitions

UNITED STATES PATENT AND TRADEMARK OFFICE

Commissioner for Patents
United States Patent and Trademark Office
P.O. Box 1450
Alexandria, VA 22313-1450
www.uspto.gov

COPY MAILED

MAR 30 2007

OFFICE OF PETITIONS

QUINE INTELLECTUAL PROPERTY LAW GROUP, P.C.
P O BOX 458
ALAMEDA CA 94501

In re Application of	:
Cheng et al.	:
Application No. 10/928,755	: DECISION ON PETITION
Filed: August 27, 2004	: UNDER 37 CFR 1.78(a)(6)
Attorney Docket No. 318-001610US	:

This is a decision on the renewed petition under 37 CFR 1.78(a)(6), filed December 18, 2006, to accept an unintentionally delayed claim under 35 U.S.C. §119(e) for the benefit of the prior-filed provisional application set forth in the concurrently filed amendment.

The petition is **GRANTED.**

A petition under 37 CFR 1.78(a)(6) is only applicable to those applications filed on or after November 29, 2000. Further, the petition is appropriate only after expiration of the period specified in 37 CFR 1.78(a)(5)(ii) and must be filed during the pendency of the nonprovisional application. In addition, the petition must be accompanied by:

(1) the reference required by 35 U.S.C. § 119(e) and 37 CFR 1.78(a)(5)(i) to the prior-filed application, unless previously submitted;
(2) the surcharge set forth in § 1.17(t); and
(3) a statement that the entire delay between the date the claim was due under 37 CFR 1.78(a)(5)(ii) and the date the claim was filed was unintentional. The Director may require additional information where there is a question whether the delay was unintentional.

Additionally, the instant nonprovisional application must be pending at the time of filing of the reference to the prior-filed provisional application as required by 37 CFR 1.78(a)(5)(ii). Further, the nonprovisional application claiming the benefit of the prior-filed provisional application must have been filed within twelve months of the filing date of the prior-filed provisional application.

All of the above requirements having been satisfied, the late claim for priority under 35 U.S.C. § 119(e) is accepted as being unintentionally delayed.

The granting of the petition to accept the delayed benefit claim to the prior-filed application under 37 CFR 1.78(a)(6) should not be construed as meaning that this application is entitled to the benefit of the filing date of the prior-filed application. In order for this application to be entitled to the benefit of the prior-filed application, all other requirements under 35 U.S.C. §119(e) and 37 CFR 1.78(a)(4) and (a)(5) must be met. Similarly, the fact that the corrected Filing Receipt accompanying this decision on petition includes the prior-filed application should not be construed as meaning that applicant is entitled to the claim for benefit of priority to the prior-filed application noted thereon. Accordingly, the examiner will, in due course, consider this benefit claim and determine whether the application is entitled to the benefit of the earlier filing date.

A corrected Filing Receipt, which includes the priority claim to the prior-filed provisional application, accompanies this decision on petition.

Any inquiries concerning this decision may be directed to Charlema R. Grant at (571) 272-3215. All other inquiries concerning either the examination procedures or status of the application should be directed to the Technology Center.

The application is being forwarded to Technology Center AU 1755 for consideration by the examiner of the claim under 35 U.S.C. §119(e) for the benefit of priority to the prior-filed provisional application.

Shuree Willis Bradley for
Ira Lazarus
Supervisory Petitions Examiner
Office of Petitions

UNITED STATES PATENT AND TRADEMARK OFFICE

UNITED STATES DEPARTMENT OF COMMERCE
United States Patent and Trademark Office
Address: COMMISSIONER FOR PATENTS
P.O. Box 1450
Alexandria, Virginia 22313-1450
www.uspto.gov

APPL NO.	FILING OR 371(c) DATE	ART UNIT	FIL FEE REC'D	ATTY.DOCKET NO	TOT CLMS	IND CLMS
10/928,755	08/27/2004	1755	830	318-001610US	23	3

CONFIRMATION NO. 2660

CORRECTED FILING RECEIPT

OC000000023148307

22798
QUINE INTELLECTUAL PROPERTY LAW GROUP, P.C.
P O BOX 458
ALAMEDA, CA 94501

Date Mailed: 03/28/2007

Receipt is acknowledged of this regular Patent Application. It will be considered in its order and you will be notified as to the results of the examination. Be sure to provide the U.S. APPLICATION NUMBER, FILING DATE, NAME OF APPLICANT, and TITLE OF INVENTION when inquiring about this application. Fees transmitted by check or draft are subject to collection. Please verify the accuracy of the data presented on this receipt. **If an error is noted on this Filing Receipt, please mail to the Commissioner for Patents P.O. Box 1450 Alexandria Va 22313-1450. Please provide a copy of this Filing Receipt with the changes noted thereon. If you received a "Notice to File Missing Parts" for this application, please submit any corrections to this Filing Receipt with your reply to the Notice. When the USPTO processes the reply to the Notice, the USPTO will generate another Filing Receipt incorporating the requested corrections (if appropriate).**

Applicant(s)

Shifan Cheng, Moraga, CA;
Yi-Qun Li, Walnut Creek, CA;

Assignment For Published Patent Application

Intematix Corporation

Power of Attorney: The patent practitioners associated with Customer Number **22798**.

Domestic Priority data as claimed by applicant

This appln claims benefit of 60/500,917 09/04/2003

Foreign Applications

If Required, Foreign Filing License Granted: 10/22/2004

The country code and number of your priority application, to be used for filing abroad under the Paris Convention, is US10/928,755

Projected Publication Date: Not Applicable

Non-Publication Request: No

Early Publication Request: No

** SMALL ENTITY **

Title

Doped cadmium tungstate scintillator with improved radiation hardness

Preliminary Class

252

PROTECTING YOUR INVENTION OUTSIDE THE UNITED STATES

Since the rights granted by a U.S. patent extend only throughout the territory of the United States and have no effect in a foreign country, an inventor who wishes patent protection in another country must apply for a patent in a specific country or in regional patent offices. Applicants may wish to consider the filing of an international application under the Patent Cooperation Treaty (PCT). An international (PCT) application generally has the same effect as a regular national patent application in each PCT-member country. The PCT process **simplifies** the filing of patent applications on the same invention in member countries, but **does not result** in a grant of "an international patent" and does not eliminate the need of applicants to file additional documents and fees in countries where patent protection is desired.

Almost every country has its own patent law, and a person desiring a patent in a particular country must make an application for patent in that country in accordance with its particular laws. Since the laws of many countries differ in various respects from the patent law of the United States, applicants are advised to seek guidance from specific foreign countries to ensure that patent rights are not lost prematurely.

Applicants also are advised that in the case of inventions made in the United States, the Director of the USPTO must issue a license before applicants can apply for a patent in a foreign country. The filing of a U.S. patent application serves as a request for a foreign filing license. The application's filing receipt contains further information and guidance as to the status of applicant's license for foreign filing.

Applicants may wish to consult the USPTO booklet, "General Information Concerning Patents" (specifically, the section entitled "Treaties and Foreign Patents") for more information on timeframes and deadlines for filing foreign patent applications. The guide is available either by contacting the USPTO Contact Center at 800-786-9199, or it can be viewed on the USPTO website at http://www.uspto.gov/web/offices/pac/doc/general/index.html.

For information on preventing theft of your intellectual property (patents, trademarks and copyrights), you may wish to consult the U.S. Government website, http://www.stopfakes.gov. Part of a Department of Commerce initiative, this website includes self-help "toolkits" giving innovators guidance on how to protect intellectual property in specific countries such as China, Korea and Mexico. For questions regarding patent enforcement issues, applicants may call the U.S. Government hotline at 1-866-999-HALT (1-866-999-4158).

LICENSE FOR FOREIGN FILING UNDER
Title 35, United States Code, Section 184
Title 37, Code of Federal Regulations, 5.11 & 5.15

GRANTED

The applicant has been granted a license under 35 U.S.C. 184, if the phrase "IF REQUIRED, FOREIGN FILING LICENSE GRANTED" followed by a date appears on this form. Such licenses are issued in all applications where the conditions for issuance of a license have been met, regardless of whether or not a license may be required as set forth in 37 CFR 5.15. The scope and limitations of this license are set forth in 37 CFR 5.15(a) unless an earlier license has been issued under 37 CFR 5.15(b). The license is subject to revocation upon written notification. The date indicated is the effective date of the license, unless an earlier license of similar scope has been granted under 37 CFR 5.13 or 5.14.

This license is to be retained by the licensee and may be used at any time on or after the effective date thereof unless it is revoked. This license is automatically transferred to any related applications(s) filed under 37 CFR 1.53(d). This license is not retroactive.

The grant of a license does not in any way lessen the responsibility of a licensee for the security of the subject matter as imposed by any Government contract or the provisions of existing laws relating to espionage and the national security or the export of technical data. Licensees should apprise themselves of current regulations especially with respect to certain countries, of other agencies, particularly the Office of Defense Trade Controls, Department of State (with respect to Arms, Munitions and Implements of War (22 CFR 121-128)); the Bureau of Industry and Security, Department of Commerce (15 CFR parts 730-774); the Office of Foreign Assets Control, Department of Treasury (31 CFR Parts 500+) and the Department of Energy.

NOT GRANTED

No license under 35 U.S.C. 184 has been granted at this time, if the phrase "IF REQUIRED, FOREIGN FILING LICENSE GRANTED" DOES NOT appear on this form. Applicant may still petition for a license under 37 CFR 5.12, if a license is desired before the expiration of 6 months from the filing date of the application. If 6 months has lapsed from the filing date of this application and the licensee has not received any indication of a secrecy order under 35 U.S.C. 181, the licensee may foreign file the application pursuant to 37 CFR 5.15(b).

UNITED STATES PATENT AND TRADEMARK OFFICE

UNITED STATES DEPARTMENT OF COMMERCE
United States Patent and Trademark Office
Address: COMMISSIONER FOR PATENTS
P.O. Box 1450
Alexandria, Virginia 22313-1450
www.uspto.gov

ORRICK, HERRINGTON & SUTCLIFFE, LLP
IP PROSECUTION DEPARTMENT
4 PARK PLAZA
SUITE 1600
IRVINE, CA 92614-2558

Mail Date: 04/21/2010

Applicant	: Ian Morris	: DECISION ON REQUEST FOR
Patent Number	: 7607310	: RECALCULATION of PATENT
Issue Date	: 10/27/2009	: TERM ADJUSTMENT IN VIEW
Appliction No	: 10/928,757	: OF WYETH AND NOTICE OF INTENT TO
Filed	: 08/26/2004	: ISSUE CERTIFICATE OF CORRECTION
		:

The Request for Recalculation is **GRANTED** to the extent indicated.

The patent term adjustment has been determined to be **327** days. The USPTO will *sua sponte* issue a certificate of correction reflecting the amount of PTA days determined by the recalculation.

Prior to the issuance of the certificate of correction, the USPTO will afford patentee an opportunity to be heard and request reconsideration. Accordingly, patentee has **one month or thirty (30) days**, whichever is longer, to file a request for reconsideration of this patent term adjustment calculation. See 35 U.S.C. 154(b)(3)(B)(ii) and 37 CFR 1.322(a)(4). No extensions of time will be granted under 37 CFR 1.136.

Patentee should use document code PET.OP if electronically filing a request for reconsideration of this patent term adjustment calculation. The patentee must also include the information required by 37 CFR 1.705(b)(2) and the fee required by 37 CFR 1.18(e). If patentee does not file a timely request for reconsideration of this patent term adjustment calculation including the information required by 37 CFR 1.705(b)(2) and the fee required by 37 CFR 1.18(e), the USPTO will issue a certificate of correction reflecting the PTA determination noted above.

Patentee should be aware that in order to preserve the right to review in the United States District Court for the District of Columbia of the USPTO patent term adjustment determination, patentee must ensure that he or she also take the steps required under 35 U.S.C. 154(b)(4)(A) in a timely manner. Nothing in the request for recalculation should be construed as providing an alternative time frame for commencing a civil action under 35 U.S.C. 154(b)(4)(A).

Any questions concerning this decision should be directed to the Office of Patent Legal Administration at 571-272-7702.

UNITED STATES PATENT AND TRADEMARK OFFICE

COMMISSIONER FOR PATENTS
UNITED STATES PATENT AND TRADEMARK OFFICE
P.O. BOX 1450
ALEXANDRIA, VA 22313-1450
www.uspto.gov

J C PATENTS, INC.
4 VENTURE – SUITE 250
IRVINE, CA 92618

COPY MAILED

AUG 2 1 2007

OFFICE OF PETITIONS

In re Application of	:	
Takashi Tsujimoto	:	
Application No. 10/928,763	:	DECISION ON PETITION
Filed: August 26, 2004	:	UNDER 37 CFR 1.55(c)
Attorney Docket No. JCLA14430	:	

This is a decision on the petition under 37 CFR 1.55(c), filed July 20, 2007, to accept an unintentionally delayed claim under 35 U.S.C. § 119(a)-(d) for benefit of priority to the filing date of foreign Japanese Application No. 2003-304686, filed August 28, 2003.

The petition is **DISMISSED**.

This application was filed after November 29, 2000, and did not include a reference to the foreign application, for which benefit is now sought, within the later of four months from the actual filing date of the application or sixteen months from the filing date of the prior foreign application. Since the claim for priority is submitted after the period specified in 37 CFR 1.55(a)(1)(i), this is an appropriate petition under the provisions of 37 CFR 1.55(c).

A petition under 37 CFR 1.55(c) to accept an unintentionally delayed claim for priority requires:

(1) The nonprovisional application claiming the benefit of an earlier filing date must be filed on or after November 29, 2000;
(2) the claim submitted with the petition must identify the prior foreign application for which priority is claimed, as well as any foreign application for the same subject matter and having a filing date before that of the application for which priority is claimed, by the application number, country, and the filing date, **and be included either in an oath or declaration (37 CFR 1.63(c)(2)) or in an Application Data Sheet (37 CFR 1.76(b)(6))**;
(3) the surcharge as set forth in 37 CFR 1.17(t);
(4) a statement that the entire delay between the date the claim was due under 37 CFR 1.55(a)(1) and the date the claim was filed was unintentional (the Director may require additional information where there is a question whether the delay was unintentional); and
(5) the above-identified nonprovisional application must be filed within 12 months of the filing date of the foreign application.

The petition fails to comply with item (2) above. In this regard, a review of the file record fails to disclose that the priority information was included in an oath or declaration or in an Application Data Sheet (ADS) in accordance with 37 CFR 1.76(b)(6). Unless provided in an ADS, 37 CFR 1.63(c)(2) requires that the oath or declaration must identify the foreign application for patent (or inventor's certificate) for which priority is claimed under 37 CFR 1.55, and any foreign application having a filing date before that of the application on which priority is claimed, by specifying the application number, country, day, month, and year of its filing. *Note* MPEP 201.14.

In view of the above, compliance with 37 CFR 1.63(c)(2) or 37 CFR 1.76(b)(6) must be satisfied if applicant desires to claim benefit of priority to the foreign application noted in the petition (and on the certified copy). Any future petition should include a cover letter and be entitled "Renewed Petition under 37 CFR 1.55(c)."

Further correspondence with respect to this matter should be addressed as follows:

By mail: Mail Stop PETITIONS
Commissioner for Patents
Post Office Box 1450
Alexandria, VA 22313-1450

By hand: Customer Service Window
Mail Stop Petitions
Randolph Building
401 Dulany Street
Alexandria, VA 22314

By fax: (571) 273-8300
ATTN: Office of Petitions

Correspondence regarding this decision may also be filed through the electronic filing system of the USPTO.

To expedite consideration, petitioner may wish to contact the undersigned regarding the filing of the renewed petition under 37 CFR 1.55(c).

Any questions concerning this matter may be directed to the undersigned at (571) 272-3218.

Frances Hicks
Petitions Examiner
Office of Petitions

UNITED STATES PATENT AND TRADEMARK OFFICE

COMMISSIONER FOR PATENTS
UNITED STATES PATENT AND TRADEMARK OFFICE
WASHINGTON, D.C. 20231
www.uspto.gov

APPLICATION NUMBER	FILING/RECEIPT DATE	FIRST NAMED APPLICANT	ATTORNEY DOCKET NUMBER
10/928,769	08/30/2004	Gary Neal Poovey	None

CONFIRMATION NO.
4690

GARY NEAL POOVEY
28557 LEMON AVENUE
ESCALON CA 95320

Date Mailed: March 3, 2006

Decision Dismissing Petition under 37 CFR 1.138(c)

The declaration of express abandonment will not be recognized

This is in response to the petition under 37 CFR 1.138(c), for express abandonment to avoid publication of the above-identified application.

The petition is dismissed.

The express abandonment will **not** be recognized for the reason(s) indicated below:

1. ☑ The petition under 37 CFR 1.138(c) was not filed in sufficient time to permit the appropriate officials to recognize the abandonment and remove the application from the publication process.

2. ☐ The petition was not signed by a party authorized by 37 CFR 1.33(b)(1), (3) or (4).

3. ☐ The Application was published in compliance with 35 U.S.C. 122(b), and it is available on the USPTO web site at http://www.uspto.gov/patft/index.html.

The application **has/will be published** as scheduled.

Telephone inquiries should be directed Office of Patent Publication, Pre-Grant Publication Division, 703-605-4283

Barbara J. Debnam
Office of Patent Publication
Pre-Grant Publication Division

UNITED STATES PATENT AND TRADEMARK OFFICE

Commissioner for Patents
United States Patent and Trademark Office
P.O. Box 1450
Alexandria, VA 22313-1450
www.uspto.gov

MAILED
FROM DIRECTORS OFFICE

FEB 01 2006

TECHNOLOGY CENTER 3600

Thomte, Mazour & Niebergall, LLC
2120 S. 72nd Street, Suite 1111
Omaha, NE 68124

In re patent of
Trevor Lienemann
Patent No. 6,951,189
Issued: October 4, 2005
For: HAY SAVER INSERT

NOTIFICATION OF IMPROPER PRIOR ART CITATION UNDER 37 CFR 1.501

The prior art citation filed by the patent owner under 37 CFR 1.501 on December 30, 2005 is hereby acknowledged to have been received and reviewed by the Patent and Trademark Office. The requirements for a proper prior art citation under 37 CFR 1.501 are as follows:

A) prior art submitted must be limited to "written prior art consisting of patents and publications". Any submission that contains any issue not directed to patents and publications will not be entered into the file and will be returned unconsidered, despite the fact that it may also contain "properly considerable" prior art. MPEP 2205.

B) an explanation of how the person submitting the prior art considers it to be pertinent and applicable to the patent. MPEP 2205.

C) if filed by a party other than the patent owner, an explanation of why it is believed that the prior art has a bearing on the patentability of any claim of the patent. MPEP 2205.

D) if filed by a party other than the patent owner, an indication must be present that a copy of the submission has been served on the patent owner, or includes a duplicate copy if service on the patent owner was not possible.

In addition, it is preferred that copies of the prior art be submitted, and the citations should be identified by patent number, issue date and patentee, or publication date and author if the citation is non-patent literature. MPEP 2205.

The prior art submission of December 30, 2005 lacks item B) above. There is no explanation as to how the citations submitted are pertinent to the patent.

Furthermore, there is no listing on a PTO-1449 form, or equivalent, of the citations publication or issue date, etc. A publication date of the brochure should also be provided. Finally, a copy of the design reference has not been submitted.

Accordingly, the submission is hereby returned to the patent owner as an attachment to this Notification as per the procedure outlined in MPEP 2206.

Telephone inquiries relative to this letter should be directed to Special Programs Examiner Steven N. Meyers at (571) 272-6611.

Donald Hajec, Director
Patent Technology Center 3600
(571) 272-5150

SM: 1/31/06
SM

Attachment: Submission under 37 CFR 1.501 filed December 30, 2005

OIPE IAP57
DEC 30 2005
PATENT & TRADEMARK OFFICE

IN THE UNITED STATES PATENT AND TRADEMARK OFFICE

INVENTOR: TREVOR L. LIENEMANN

U.S. PATENT NO.: 6,951,189 B1

ISSUED: October 4, 2005

TITLE: HAY SAVER INSERT

CITATION OF PRIOR ART RE:
U.S. PATENT NO. 6,951,189 PURSUANT TO 37 CFR 1.501

Commissioner for Patents
Alexandria, VA 22313

Dear Sir:

Comes now the owner of the above-identified patent, pursuant to 37 CFR 1.501, citing prior art which has been brought to the attention of the patent owner.

U.S. Des. 451,649

It is believed that the claims of the '189 patent differ from that of the '649 patent for the following reasons: (1) the feeder of the '649 patent has spaced-apart and horizontally extending bars or pipes at the upper end of the cradle which prevent a bale of hay from being received within the cradle; (2) four boards extend upwardly from the upper end of the cradle; (3) the '649 feeder cradle does not have an upper end portion which includes a plurality of upwardly extending and horizontally spaced-apart bars; and (4) the '649 feeder cradle does not have a shield which extends around upwardly extending and horizontally spaced-apart bars.

The Handi-Klasp Feeder of Weldy Enterprises

It is believed that the claims of the '189 patent differ from that of the Handi-Klasp feeder since the Handi-Klasp feeder does not have a removable insert, but is apparently unitary in construction.

A copy of an undated Handi-Klasp brochure is enclosed.

Respectfully submitted,

DENNIS L. THOMTE
Registration No. 22,497
Attorneys of Record

2120 S. 72nd Street, Suite 1111
Omaha, NE 68124
(402) 392-2280

CERTIFICATE OF MAILING

I hereby certify that the original of this CITATION OF PRIOR ART RE: U.S. PATENT NO. 6,951,189 for TREVOR L. LIENEMANN, U.S. Patent No. 6,951,189, was mailed by first class mail, postage prepaid, to Mail Stop Post Issue, Commissioner for Patents, P.O. Box 1450, Alexandria, VA 22313-1450, on this 28 day of December, 2005.

DENNIS L. THOMTE

OIPE IAP57 DEC 30 2005 PATENT & TRADEMARK OFFICE

BEST AVAILABLE COPY

Handi-Klasp BY WELDY ENTERPRISES

Off: Waterfor
Wakarusa, IN 46
Toll Free: 800-
Phone: 574-862
Fax: 574-862-2
Email: info@

Round Bale Hay Savers

Our round R7C Bale Feeder came out first in Michigan State University tests. This cone feeder was found to be the most efficent, having less waste, therefore saving the most money for farmers on feed costs.

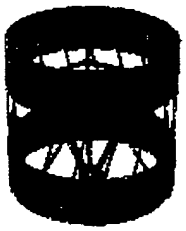

Minimize waste with slanted bar design and solid hay saver panels

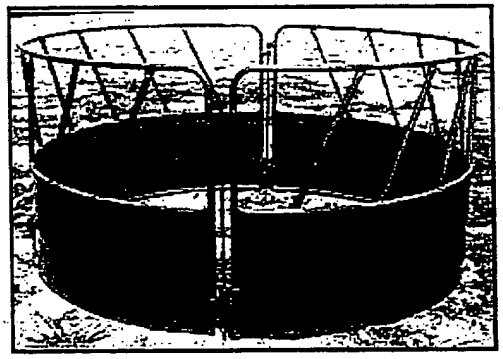

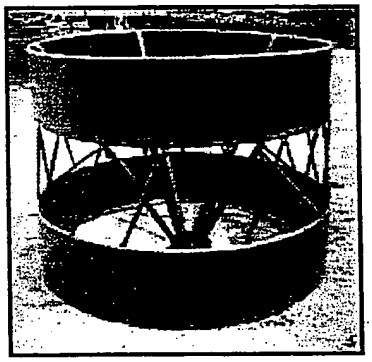

MODEL JR7:: 7'9". Diameter, 47u height, Two hinged semicircles. Heavy duty steel tubing. 22" hay saver panel 14 gauge steel. Weight 290 lbs. Heavy Duty panels available for stacks or bales.

MODEL JR6: 6'6" diameter, 47" height. Two hinged semicircies. Heavy duty steel tubing. 22" hay saver panel 14 gauge steel. Weight 250 lbs. Heavy duty panels available for stacks or bales

MODEL R7C: 7'8". diameter, 6'2". height. 22" hay saver panels. Five 2" x 2" square tubes form a cone which holds the bales off the ground. Helps minimize waste. Weight 570 lbs.

UNITED STATES PATENT AND TRADEMARK OFFICE

Commissioner for Patents
United States Patent and Trademark Office
P.O. Box 1450
Alexandria, VA 22313-1450
www.uspto.gov

MAILED
FROM DIRECTORS OFFICE

JUL 23 2007

TECHNOLOGY CENTER 3600

THOMTE MAZOUR AND NIEBERGALL LLC
2120 S 72ND ST STE 1111
OMAHA, NE 68124

In re patent of
Trevor Lienemann
Patent No. 6,951,189
Issued: October 4, 2005
For: HAY SAVER INSERT

LETTER OF ACKNOWLEDGEMENT AND NOTIFICATION OF IMPROPER PRIOR ART CITATION UNDER 37 CFR 1.501

The prior art citation filed by the patent owner under 37 CFR 1.501 on March 1, 2007 has been received and reviewed by the Patent and Trademark Office. The requirements for a proper prior art citation under 37 CFR 1.501 are as follows:

A) Prior art submitted must be limited to "written prior art consisting of patents and publications". Any submission that contains any issue not directed to patents and publications will not be entered into the file and will be returned unconsidered, despite the fact that it may also contain "properly considerable" prior art. MPEP 2205.

B) An explanation of how the person submitting the prior art considers it to be pertinent and applicable to the patent and believes to have a bearing on the patentability of any claim of the patent.

C) If filed by a party other than the patent owner, an indication must be present that a copy of the submission has been served on the patent owner, or includes a duplicate copy if service on the patent owner was not possible.

The prior art submission of March 1, 2007 lacks items (A) and (B) above. As to (A), the submissions refer to the sale of a product and not to publications. As to (B), the citation submitted lacks any explanation of how the patent owner considers the references to be pertinent and applicable to the patent and believes to have a bearing on the patentability of any claim of the patent. Accordingly, the submission is hereby returned to the patent owner as an attachment to this Notification as per the procedure outlined in MPEP 2206.

Telephone inquiries relative to this letter should be directed to Special Programs Examiner Kenneth J. Dorner at (571) 272-6587.

Donald Hajec, Director
Patent Technology Center 3600
(571) 272-5150

kjd: 7/16/07

Attachment: Citation of Prior Art Re: U.S. Patent No. 6,951,189 Pursuant to 37 CFR 1.501 filed March 1, 2007

UNITED STATES PATENT AND TRADEMARK OFFICE

COMMISSIONER FOR PATENTS
UNITED STATES PATENT AND TRADEMARK OFFICE
P.O. BOX 1450
ALEXANDRIA, VA 22313-1450
www.uspto.gov

JONES DAY
222 EAST 41ST ST
NEW YORK, NY 10017

COPY MAILED

DEC 26 2007

OFFICE OF PETITIONS

In re Patent No. 7,186,841	:	
Issue Date: March 6, 2007	:	
Application No. 10/928,784	:	ON PETITION
Filed: August 26, 2004	:	
Patentee(s): Michelle F. Browner, et. al.	:	

This is a decision on the request under 37 CFR 3.81[1], filed January 23, 2007, to add a second name of an assignee on the front page of the above-identified patent.

It is not apparent whether the person signing the instant petition was ever given a power of attorney or authorization of agent to prosecute the above-identified application. However, in accordance with 37 CFR 1.34(a), the signature appearing on the petition shall constitute a representation to the United States Patent and Trademark Office that he/she is authorized to represent the particular party in whose behalf he/she acts.

Additionally, it is noted that on March 6, 2007, the patent issued with both names of the assignee as requested in the request filed on January 23, 2007.

Since the request is found to be in compliance with 37 CFR 3.81, the request is being treated as having been granted prior to the issuance of the above patent on March 6, 2007. Accordingly, the request is **GRANTED** and this decision ratifies the ensuing prosecution.

The patent file is being referred to the Files Repository.

Telephone inquiries concerning this decision may be directed to the undersigned at (571) 272-3226.

Andrea Smith
Petitions Examiner
Office of Petitions

---

[1] *See* MPEP 1309, subsection II; and Official Gazette of June 22, 2004.

UNITED STATES PATENT AND TRADEMARK OFFICE

Commissioner for Patents
United States Patent and Trademark Office
P.O. Box 1450
Alexandria, VA 22313-1450
www.uspto.gov

TUNG & ASSOCIATES
838 W. Long Lake Road, Suite 120
Bloomfield Hills MI 48302

MAILED

MAR 05 2009

OFFICE OF PETITIONS

In re Application of	:	
Chang et al.	:	
Application No. 10/928787	:	
Filing or 371(c) Date: 08/27/2004	:	DECISION
Attorney Docket Number: 67,200-1075	:	ON PETITION

This is a decision on the petition to withdraw the holding of abandonment under 37 CFR 1.181, filed January 30, 2009.

This Petition is hereby **granted**.

The above-identified application became abandoned for failure to timely and properly reply to the final Office action, mailed February 19, 2008. The Office action set a three (3) month period for reply, and provided for extensions of time under 37 CFR 1.136(a). Applicant filed an Amendment in response to the Office action on March 25, 2008; however, the Amendment failed to place the application in condition for allowance. Applicant was so notified in an Advisory Action, mailed April 21, 2008. No complete and proper reply having been received, the application became abandoned on May 20, 2008. A Notice of Abandonment was mailed October 2, 2008.

The present petition

Applicant files the present Petition and asserts that a timely reply to the Office action was filed via facsimile on May 8, 2008. In support of this assertion, Applicant includes a copy of the reply, and a copy of an Auto-Reply Facsimile Transmission report from this Office acknowledging receipt of two (2) pages from Applicant on May 8, 2008.

A review of the copy of the reply to wit – a Request for Continued Examination ("RCE"), filed with the petition reveals that it includes a request to use the Amendment filed March 25, 2008 as the submission, and a Certificate of Transmission under 37 CFR 1.8, executed by Petitioner herein, attesting to the transmission of the reply on May 8, 2008.

A review of Office finance records reveals that this Office received the fee for the filing of a RCE, $810.00, on May 8, 2008.

The file record does not include the originally submitted papers. Failure to receive correspondence which includes a certificate of mailing or certificate of facsimile transmission is addressed in 37 CFR 1.8(b), reproduced below:

> In the event that correspondence is considered timely filed by being mailed or transmitted in accordance with paragraph (a) of this section, but not received in the U.S. Patent and Trademark Office after a reasonable amount of time has elapsed from the time of mailing or transmitting of the correspondence, or after the application is held to be abandoned, or after the proceeding is dismissed or decided with prejudice, or the prosecution of a reexamination proceeding is terminated pursuant to § 1.550(d) or § 1.957(b) or limited pursuant to § 1.957(c), or a requester paper is refused consideration pursuant to §a), the correspondence will be considered timely if the party who forwarded such correspondence:
>
> (1)Informs the Office of the previous mailing or transmission of the correspondence promptly after becoming aware that the Office has no evidence of receipt of the correspondence;
>
> (2)Supplies an additional copy of the previously mailed or transmitted correspondence and certificate; and
>
> (3)Includes a statement that attests on a personal knowledge basis or to the satisfaction of the Director to the previous timely mailing, transmission or submission. If the correspondence was sent by facsimile transmission, a copy of the sending unit's report confirming transmission may be used to support this statement. If the correspondence was transmitted via the Office electronic filing system, a copy of an acknowledgment receipt generated by the Office electronic filing system confirming submission may be used to support this statement.
>
> (c) The Office may require additional evidence to determine if the correspondence was timely filed.

Applicant has complied with the requirements of 37 CFR 1.8(b).

In view of the foregoing, the petition is granted. The holding of abandonment is hereby withdrawn.

The application will be referred to Technology Center Art Unit 2168 for processing of the Reply, and for continued examination in the normal course of business.

Telephone inquiries concerning this matter should be directed to the undersigned at (571) 272-3232.

/Derek L. Woods/
Derek L. Woods
Attorney
Office of Petitions

UNITED STATES PATENT AND TRADEMARK OFFICE

Commissioner for Patents
United States Patent and Trademark Office
P.O. Box 1450
Alexandria, VA 22313-1450
www.uspto.gov

STEPHEN L. KING
4642 OYSTER BAY ROAD NW
OLYMPIA, WA 98502

COPY MAILED

OCT 31 2006

OFFICE OF PETITIONS

In re Application of
Edmund J. Kelly
Application No. 10/928,790
Filed: August 27, 2004
Attorney Docket No. Orion02

DECISION ON PETITION
TO WITHDRAW
FROM RECORD

This is a decision on the Request to Withdraw as attorney or agent of record under 37 C.F.R. § 1.36(b), filed July 21, 2006.

The request is **NOT APPROVED**.

A grantable request to withdraw as attorney/agent of record must be signed by every attorney/agent seeking to withdraw or contain a clear indication that one attorney is signing on behalf of another/others. A request to withdraw will not be approved unless at least 30 (thirty) days would remain between the date of approval and the later of the expiration date of a time to file a response or the expiration date of the maximum time period which can be extended under 37 C.F.R. § 1.136(a).

The Office cannot approve the request at this time since the reasons provided do not meet any of the conditions under the mandatory or permissive categories enumerated in 37 CFR 10.40. Section 10.40 of Title 37 of the Code of Federal Regulation states, "[a] practitioner shall not withdraw from employment in a proceeding before the Office without permission from the Office[.]" More specifically, 37 CFR 10.40 states, "[i]f paragraph (b) of this section is not applicable, a practitioner may not request permission to withdraw in matter pending before the Office unless such request or such withdrawal is" for one the permissive reasons listed in 37 CFR 10.40(c). The reasons set forth in the request, "requested by assignee of the invention", does not meet any the conditions set forth in 37 CFR 10.40.

In order to request or take action in a patent matter, the assignee must establish its ownership of the patent to the satisfaction of the Director. In this regard, a Statement under 37 CFR 3.73(b) must have either: (i) documentary evidence of a chain of title from the original owner to the assignee (*e.g.*, copy of an executed assignment), and a statement affirming that the documentary evidence of the chain of title from the original owner to the assignee was or concurrently is being

submitted for recordation pursuant to § 3.11; or (ii) a statement specifying where documentary evidence of a chain of title from the original owner to the assignee is recorded in the assignment records of the Office (*e.g.*, reel and frame number).

All future communications from the Office will continue to be directed to the above-listed address until otherwise notified by applicant.

Telephone inquiries concerning this decision should be directed to April Wise 571-272-1642.

April M. Wise
Petitions Examiner
Office of Petitions

CC: ALBERT S. PENILLA, ESQ.
MARTINE PENILLA & GENCARELLA, LLP
710 LAKEWAY DRIVE
SUITE 200
SUNNYVALE, CA 94085

UNITED STATES PATENT AND TRADEMARK OFFICE

UNITED STATES DEPARTMENT OF COMMERCE
United States Patent and Trademark Office
Address: COMMISSIONER FOR PATENTS
P.O. Box 1450
Alexandria, Virginia 22313-1450
www.uspto.gov

CARLSON, GASKEY & OLDS, P.C.
400 WEST MAPLE ROAD
SUITE 350
BIRMINGHAM, MI 48009

Mail Date: 04/28/2010

Applicant	: Paul Arnold	: DECISION ON REQUEST FOR
Patent Number	: 7607691	: RECALCULATION of PATENT
Issue Date	: 10/27/2009	: TERM ADJUSTMENT IN VIEW
Application No	: 10/928,793	: OF WYETH AND NOTICE OF INTENT TO
Filed	: 08/27/2004	: ISSUE CERTIFICATE OF CORRECTION
		:

The Request for Recalculation is **GRANTED** to the extent indicated.

The patent term adjustment has been determined to be **1203** days. The USPTO will *sua sponte* issue a certificate of correction reflecting the amount of PTA days determined by the recalculation.

Prior to the issuance of the certificate of correction, the USPTO will afford patentee an opportunity to be heard and request reconsideration. Accordingly, patentee has **one month or thirty (30) days**, whichever is longer, to file a request for reconsideration of this patent term adjustment calculation. See 35 U.S.C. 154(b)(3)(B)(ii) and 37 CFR 1.322(a)(4). No extensions of time will be granted under 37 CFR 1.136.

Patentee should use document code PET.OP if electronically filing a request for reconsideration of this patent term adjustment calculation. The patentee must also include the information required by 37 CFR 1.705(b)(2) and the fee required by 37 CFR 1.18(e). If patentee does not file a timely request for reconsideration of this patent term adjustment calculation including the information required by 37 CFR 1.705(b)(2) and the fee required by 37 CFR 1.18(e), the USPTO will issue a certificate of correction reflecting the PTA determination noted above.

Patentee should be aware that in order to preserve the right to review in the United States District Court for the District of Columbia of the USPTO patent term adjustment determination, patentee must ensure that he or she also take the steps required under 35 U.S.C. 154(b)(4)(A) in a timely manner. Nothing in the request for recalculation should be construed as providing an alternative time frame for commencing a civil action under 35 U.S.C. 154(b)(4)(A).

Any questions concerning this decision should be directed to the Office of Patent Legal Administration at 571-272-7702.

UNITED STATES PATENT AND TRADEMARK OFFICE

Commissioner for Patents
United States Patent and Trademark Office
P.O. Box 1450
Alexandria, VA 22313-1450
www.uspto.gov

QUARLES & BRADY LLP
411 E. WISCONSIN AVENUE,
SUITE 2040
MILWAUKEE WI 53202-4497

COPY MAILED

NOV 0 2 2004

OFFICE OF PETITIONS

In re Application of	:	
Zhang et al.	:	NOTICE
Application No. 10/928,805	:	
Filed: August 27, 2004	:	
Attorney Docket No. 960296.00170	:	

This is a notice regarding your request for acceptance of a fee deficiency submission under 37 CFR 1.28(c), filed September 23, 2004.

37 CFR 1.28(c) states: "The deficiency is based on the amount of the fee, for other than a small entity, in effect at the time the deficiency is paid in full." Accordingly, the fee deficiency submission under 37 CFR 1.28 is hereby **accepted**.

The change of status to a large entity has been entered and made of record.

Telephone inquiries concerning this matter may be directed to the undersigned at (571) 272-3211.

Christina Tartera Donnell

Christina Tartera Donnell
Senior Petitions Attorney
Office of Petitions

UNITED STATES PATENT AND TRADEMARK OFFICE

UNITED STATES DEPARTMENT OF COMMERCE
United States Patent and Trademark Office
Address: COMMISSIONER FOR PATENTS
P.O. Box 1450
Alexandria, Virginia 22313-1450
www.uspto.gov

QUARLES & BRADY LLP
411 E. WISCONSIN AVENUE, SUITE 2040
MILWAUKEE, WI 53202-4497

Mail Date: 04/20/2010

Applicant	: Su-Chun Zhang	: DECISION ON REQUEST FOR
Patent Number	: 7588937	: RECALCULATION of PATENT
Issue Date	: 09/15/2009	: TERM ADJUSTMENT IN VIEW
Appliction No	: 10/928,805	: OF WYETH AND NOTICE OF INTENT TO
Filed	: 08/27/2004	: ISSUE CERTIFICATE OF CORRECTION
		:

The Request for Recalculation is **GRANTED** to the extent indicated.

The patent term adjustment has been determined to be **136** days. The USPTO will *sua sponte* issue a certificate of correction reflecting the amount of PTA days determined by the recalculation.

Prior to the issuance of the certificate of correction, the USPTO will afford patentee an opportunity to be heard and request reconsideration. Accordingly, patentee has **one month or thirty (30) days**, whichever is longer, to file a request for reconsideration of this patent term adjustment calculation. See 35 U.S.C. 154(b)(3)(B)(ii) and 37 CFR 1.322(a)(4). No extensions of time will be granted under 37 CFR 1.136.

Patentee should use document code PET.OP if electronically filing a request for reconsideration of this patent term adjustment calculation. The patentee must also include the information required by 37 CFR 1.705(b)(2) and the fee required by 37 CFR 1.18(e). If patentee does not file a timely request for reconsideration of this patent term adjustment calculation including the information required by 37 CFR 1.705(b)(2) and the fee required by 37 CFR 1.18(e), the USPTO will issue a certificate of correction reflecting the PTA determination noted above.

Patentee should be aware that in order to preserve the right to review in the United States District Court for the District of Columbia of the USPTO patent term adjustment determination, patentee must ensure that he or she also take the steps required under 35 U.S.C. 154(b)(4)(A) in a timely manner. Nothing in the request for recalculation should be construed as providing an alternative time frame for commencing a civil action under 35 U.S.C. 154(b)(4)(A).

Any questions concerning this decision should be directed to the Office of Patent Legal Administration at 571-272-7702.

UNITED STATES PATENT AND TRADEMARK OFFICE

UNITED STATES DEPARTMENT OF COMMERCE
United States Patent and Trademark Office
Address: COMMISSIONER FOR PATENTS
P.O. Box 1450
Alexandria, Virginia 22313-1450
www.uspto.gov

APPL NO.	FILING OR 371 (c) DATE	ART UNIT	FIL FEE REC'D	ATTY.DOCKET NO	DRAWINGS	TOT CLMS	IND CLMS
10/928,806	08/27/2004	1638	448	06666-040002	10	27	2

CONFIRMATION NO. 4688

CORRECTED FILING RECEIPT

OC000000014277975

20985
FISH & RICHARDSON, PC
12390 EL CAMINO REAL
SAN DIEGO, CA 92130-2081

Date Mailed: 11/08/2004

Receipt is acknowledged of this regular Patent Application. It will be considered in its order and you will be notified as to the results of the examination. Be sure to provide the U.S. APPLICATION NUMBER, FILING DATE, NAME OF APPLICANT, and TITLE OF INVENTION when inquiring about this application. Fees transmitted by check or draft are subject to collection. Please verify the accuracy of the data presented on this receipt. **If an error is noted on this Filing Receipt, please write to the Office of Initial Patent Examination's Filing Receipt Corrections, facsimile number 703-746-9195. Please provide a copy of this Filing Receipt with the changes noted thereon. If you received a "Notice to File Missing Parts" for this application, please submit any corrections to this Filing Receipt with your reply to the Notice. When the USPTO processes the reply to the Notice, the USPTO will generate another Filing Receipt incorporating the requested corrections (if appropriate).**

Applicant(s)

Amy S. Lee, San Marino, CA;

Assignment For Published Patent Application

University of Southern California

Power of Attorney:

David L. Feigenbaum–30378
Scott Harris–32030
John Phillips–35322
John Hayden–37640
Joseph Baker–40900
Kenyon Jenckes–41873
Bing Ai–43312
Linda Gunderson–46341
William Hunter–47671
Dwight Thompson–53688

Domestic Priority data as claimed by applicant

This application is a CON of 09/606,804 06/28/2000
which claims benefit of 60/141,505 06/28/1999

Foreign Applications

If Required, Foreign Filing License Granted: 10/14/2004

The country code and number of your priority application, to be used for filing abroad under the Paris Convention, is US10/928,806

Projected Publication Date: 02/10/2005

Non-Publication Request: No

Early Publication Request: No

**** SMALL ENTITY ****

Title

Stress-responsive induction of a therapeutic agent and methods of use

Preliminary Class

800

LICENSE FOR FOREIGN FILING UNDER
Title 35, United States Code, Section 184
Title 37, Code of Federal Regulations, 5.11 & 5.15

GRANTED

The applicant has been granted a license under 35 U.S.C. 184, if the phrase "IF REQUIRED, FOREIGN FILING LICENSE GRANTED" followed by a date appears on this form. Such licenses are issued in all applications where the conditions for issuance of a license have been met, regardless of whether or not a license may be required as set forth in 37 CFR 5.15. The scope and limitations of this license are set forth in 37 CFR 5.15(a) unless an earlier license has been issued under 37 CFR 5.15(b). The license is subject to revocation upon written notification. The date indicated is the effective date of the license, unless an earlier license of similar scope has been granted under 37 CFR 5.13 or 5.14.

This license is to be retained by the licensee and may be used at any time on or after the effective date thereof unless it is revoked. This license is automatically transferred to any related applications(s) filed under 37 CFR 1.53(d). This license is not retroactive.

The grant of a license does not in any way lessen the responsibility of a licensee for the security of the subject matter as imposed by any Government contract or the provisions of existing laws relating to espionage and the national security or the export of technical data. Licensees should apprise themselves of current regulations especially with respect to certain countries, of other agencies, particularly the Office of Defense Trade Controls, Department of State (with respect to Arms, Munitions and Implements of War (22 CFR 121-128)); the Office of Export Administration, Department of Commerce (15 CFR 370.10 (j)); the Office of Foreign Assets Control, Department of Treasury (31 CFR Parts 500+) and the Department of Energy.

NOT GRANTED

No license under 35 U.S.C. 184 has been granted at this time, if the phrase "IF REQUIRED, FOREIGN FILING LICENSE GRANTED" DOES NOT appear on this form. Applicant may still petition for a license under 37 CFR 5.12, if a license is desired before the expiration of 6 months from the filing date of the application. If 6 months has lapsed from the filing date of this application and the licensee has not received any indication of a secrecy order under 35 U.S.C. 181, the licensee may foreign file the application pursuant to 37 CFR 5.15(b).

UNITED STATES PATENT AND TRADEMARK OFFICE

Commissioner for Patents
United States Patent and Trademark Office
P.O. Box 1450
Alexandria, VA 22313-1450
www.uspto.gov

COPY MAILED
AUG 24 2006
OFFICE OF PETITIONS

KRAMER LEVIN NAFTALIS & FRANKEL LLP
INTELLECTUAL PROPERTY DEPARTMENT
1177 AVENUE OF THE AMERICAS
NEW YORK NY 10036

In re Application of	:	
Galuten	:	
Application No. 10-928,814	:	DECISION ON PETITION
Filed: August 29, 2004	:	TO WITHDRAW
Attorney Docket No. 33177-2020	:	FROM RECORD
	:	

This is a decision on the Request to Withdraw as attorney or agent of record under 37 C.F.R. § 1.36(b), filed February 7, 2006.

The request is **APPROVED**.

A grantable request to withdraw as attorney/agent of record must be signed by every attorney/agent seeking to withdraw or contain a clear indication that one attorney is signing on behalf of another/others. A request to withdraw will not be approved unless at least 30 (thirty) days would remain between the date of approval and the later of the expiration date of a time to file a response or the expiration date of the maximum time period which can be extended under 37 C.F.R. § 1.136(a).

The request was signed by Gregor N. Neff on behalf of all attorneys of record.

All attorneys/agents associated with this application have been withdrawn.

Applicant is reminded that there is no attorney of record at this time.

The correspondence address of record has been changed and the new correspondence address is the address indicated below.

Telephone inquiries concerning this decision should be directed to April Wise at 571-272-1642.

April M. Wise
Petitions Examiner
Office of Petitions

cc: Mr. Jerry Galuten
Encore Group, LLC
360 West 253rd Street
Riverdale, NY 10471

UNITED STATES PATENT AND TRADEMARK OFFICE

Commissioner for Patents
United States Patent and Trademark Office
P.O. Box 1450
Alexandria, VA 22313-1450
www.uspto.gov

Senniger Powers Leavitt and Roedel
One Metropolitan Square
16th Floor
St. Louis MO 63102

COPY MAILED

NOV 1 0 2004

OFFICE OF PETITIONS

In re Application of	:	
Gregory et al.	:	
Application No. 10/928,835	:	DECISION GRANTING
Filed: August 27, 2004	:	PETITION
Attorney Docket No. PHA 4146.18	:	

This is a decision on the petition under 37 CFR 1.10(d), filed September 25, 2004, requesting that the above-identified application be accorded a filing date of August 27, 2004, rather than the presently accorded filing date of August 26, 2004.

Petitioner alleges that the application was deposited in Express Mail service on August 27, 2004. In support of the allegation, the petition is accompanied by Express Mail label, No. EV432654169US, indicating a date-in of August 27, 2004. The same Express Mail label number was placed on the original application papers located in the official file.

In view of the above, the petition is **granted**.

The Office of Initial Patent Examination is direct to correct the filing date to August 27, 2004, and to mail a corrected filing receipt.

Telephone inquiries should be directed to the undersigned at (571) 272-3211.

Christina Tartera Donnell

Christina Tartera Donnell
Petitions Attorney
Office of Petitions

UNITED STATES PATENT AND TRADEMARK OFFICE

Commissioner for Patents
United States Patent and Trademark Office
P.O. Box 1450
Alexandria, VA 22313-1450
www.uspto.gov

BAKER & BOTTS
30 ROCKEFELLER PLAZA
NEW YORK NY 10112

COPY MAILED
FEB 17 2006
OFFICE OF PETITIONS

In re Application of
Caron et al
Application No. 10/928,840
Filed: August 27, 2004
Attorney Docket No. AP35815-065855.0309

DECISION GRANTING PETITION UNDER 37 CFR 1.137(b)

This is a decision on the petition under 37 CFR 1.137(b), filed October 3, 2005,to revive the above-identified application.

The petition is **GRANTED**.

The above-identified application became abandoned for failure to reply in a timely manner to the Notice To File Missing Parts Of Nonprovisional Application mailed October 25, 2004, which set a period for reply of two (2) months. No extensions of time under the provisions of 37 CFR 1.136(a) were obtained. Accordingly, the above-identified application became abandoned on December 26, 2004.

Telephone inquiries concerning this decision should be directed to the undersigned at (571) 272-3208.

This matter is being referred to the Office of Initial Patent Examination.

Karen Creasy

Karen Creasy
Petitions Examiner
Office of Petitions
Office of the Deputy Commissioner
for Patent Examination Policy

UNITED STATES PATENT AND TRADEMARK OFFICE

Commissioner for Patents
United States Patent and Trademark Office
P.O. Box 1450
Alexandria, VA 22313-1450
www.uspto.gov

LEONARD TACHNER,
A PROFESSIONAL LAW CORPORATION
17961 SKY PARK CIRCLE, SUITE 38-E
IRVINE CA 92614

COPY MAILED

MAR 2 9 2007

OFFICE OF PETITIONS

In re Application of	:	
James F.Woodward et al	:	
Application No. 10/928,847	:	ON PETITION
Filed: August 25, 2004	:	
Attorney Docket No. CSUF-19	:	

This is a decision on the petition under 37 CFR 1.137(b), filed November 20, 2006, to revive the above-identified application.

The petition is **DISMISSED**.

Any request for reconsideration of this decision must be submitted within TWO (2) MONTHS from the mail date of this decision. Extensions of time under 37 CFR 1.136(a) are permitted. The reconsideration request should include a cover letter entitled "Renewed Petition under 37 CFR 1.137(b)." This is **not** final agency action within the meaning of 5 U.S.C. § 704.

A grantable petition under 37 CFR 1.137(b)[1] must be accompanied by: (1) the required reply,[2] unless previously filed; (2) the petition fee as set forth in 37 CFR 1.17(m); (3) a statement that the entire delay in filing the required reply from the due date for the reply until the filing of a grantable petition pursuant to 37 CFR 1.137(b) was unintentional; and (4) any terminal disclaimer (and fee as set forth in 37 CFR 1.20(d)) required by 37 CFR 1.137(c). Where there is a question as to whether either the abandonment or the delay in filing a petition under 37 CFR 1.137 was unintentional, the Commissioner may require additional information. See MPEP 711.03(c)(III)(C) and (D). The instant petition lack(s) item(s) (2).

The Office did not receive the petition fee of $750.

---

[1] As amended effective December 1, 1997. See Changes to Patent Practice and Procedure; Final Rule Notice, 62 Fed. Reg. 53131, 53194-95 (October 10, 1997), 1203 Off. Gaz. Pat. Office 63, 119-20 (October 21, 1997).

[2] In a nonprovisional application abandoned for failure to prosecute, the required reply may be met by the filing of a continuing application. In an application or patent, abandoned or lapsed for failure to pay the issue fee or any portion thereof, the required reply must be the payment of the issue fee or any outstanding balance thereof.

Further correspondence with respect to this matter should be addressed as follows:

By mail: Mail Stop PETITIONS
Commissioner for Patents
Post Office Box 1450
Alexandria, VA 22313-1450

By hand: Customer Window located at:

Randolph Building
401 Dulany Street
Alexandria, VA 22314

By fax: (571) 273-8300
ATTN: Office of Petitions

Telephone inquiries concerning this decision should be directed to the undersigned at (571) 272-3208.

Karen Creasy

Karen Creasy
Petitions Examiner
Office of Petitions

UNITED STATES PATENT AND TRADEMARK OFFICE

Commissioner for Patents
United States Patent and Trademark Office
P.O. Box 1450
Alexandria, VA 22313-1450
www.uspto.gov

SMITH, GAMBRELL & RUSSELL
SUITE 3100, PROMENADE II
1230 PEACHTREE STREET, N.E.
ATLANTA GA 30309-3592

COPY MAILED

MAY 21 2007

OFFICE OF PETITIONS

In re Application of Hakes et al. Application No. 10/928,850 Filed: August 27, 2004 Attorney Docket No. 044629.005 Title of Invention: Apparatus For Positive Indication of Fuse Latch Operation in Electrical Switchgear	: : : : : :	ON PETITION

This is a decision on the petition under 37 CFR §1.181 filed May 11, 2007 to withdraw the holding of abandonment.

The petition filed under 37 CFR 1.181 is **Granted**.

This application was held abandoned June 7, 2006 for failure to timely reply to the non-final Office Action mailed on March 6, 2006. The non-final Office Action set a three (3) month extendable time period for reply. A Notice of Abandonment was mailed March 13, 2007.

Petitioner contends a reply to the non-final Office Action was received in the Office on July 6, 2006. Petitioner states that the reply which included an amendment, and request for one month extension of time were submitted on July 6, 2006. In support of petitioner's contention, petitioner has submitted a acknowledgment receipt dated July 6, 2006.

The response submitted July 6, 2006 has been located. Based on the facts stated in the instant petition and the corroborative evidence provided, it is concluded that the holding of abandonment was improperly imposed.

The Notice of Abandonment is hereby vacated and the holding of abandonment is withdrawn.

This application is being forwarded to the Art Unit 2835 for further processing.

Telephone inquiries concerning this matter should be directed to the undersigned at (571) 272-3215.

Charlema R. Grant

Charlema R. Grant
Petition Attorney
Office of Petitions

UNITED STATES PATENT AND TRADEMARK OFFICE

Commissioner for Patents
United States Patent and Trademark Office
P.O. Box 1450
Alexandria, VA 22313-1450
www.uspto.gov

NASA AMES RESEARCH CENTER
ATTN: PATENT COUNSEL
MAIL STOP 202A-4
MOFFETT FIELD, CA 94035-1000

MAILED

JUL 27 2009

OFFICE OF PETITIONS

In re Application of Maluf et al. :
Application No. 10/928,874 : Decision on Petition
Filing Date: August 25, 2004 :
Attorney Docket No. ARC-14950-1 :

This is a decision on the petition under 37 CFR 1.137(b), filed May 12, 2009, to revive the above-identified application.

The petition is **granted**.

The above-identified application became abandoned for failure to submit the issue fee in a timely manner in reply to the Notice of Allowance mailed February 11, 2009, and for failure to submit corrected drawings in a timely manner in reply to the Notice of Allowability mailed February 11, 2009. Both Notices set a three-month period for reply. Therefore, the application became abandoned on May 12, 2009. A Notice of Abandonment was mailed on June 4, 2009.

The instant petition requests revival of the application.

A grantable petition under 37 CFR 1.137(b) must be accompanied by:

(1) The reply required to the outstanding Office action or notice, unless previously filed,
(2) The petition fee,
(3) A statement that the entire delay in filing the required reply from the due date for the reply until the filing of a grantable petition pursuant to 37 CFR 1.137(b) was unintentional, and
(4) A terminal disclaimer and fee if the application was filed on or before June 8, 1995 or if the application is a design application.

Petitioner has submitted a reply to the Notices in the form of payment of the issue fee and submission of corrected drawings. Petitioner has submitted the required petition fee of $1,620. Petitioner has stated the entire delay in filing the required reply from the due date for the reply until the filing of a grantable petition pursuant to 37 CFR 1.137(b) was unintentional.

Petitioner has met the requirements to revive the above-identified application pursuant to 37 CFR 1.137(b). Therefore, the petition is granted and the application is revived.

The Patent Publication Branch of the Office of Data Management will be informed of the instant decision and the application will be issued as a patent in due course.

Telephone inquiries regarding this communication should be directed to Petitions Attorney Steven Brantley at (571) 272-3203.

Charles Steven Brantley
Senior Petitions Attorney
Office of Petitions

UNITED STATES PATENT AND TRADEMARK OFFICE

UNITED STATES DEPARTMENT OF COMMERCE
United States Patent and Trademark Office
Address: COMMISSIONER FOR PATENTS
P.O. Box 1450
Alexandria, Virginia 22313-1450
www.uspto.gov

NASA AMES RESEARCH CENTER
ATTN: PATENT COUNSEL
MAIL STOP 202A-4
MOFFETT FIELD, CA 94035-1000

Mail Date: 04/20/2010

Applicant	: David A. Maluf	: DECISION ON REQUEST FOR
Patent Number	: 7596416	: RECALCULATION of PATENT
Issue Date	: 09/29/2009	: TERM ADJUSTMENT IN VIEW
Appliction No	: 10/928,874	: OF WYETH AND NOTICE OF INTENT TO
Filed	: 08/25/2004	: ISSUE CERTIFICATE OF CORRECTION
		:

The Request for Recalculation is **GRANTED** to the extent indicated.

The patent term adjustment has been determined to be **1061** days. The USPTO will *sua sponte* issue a certificate of correction reflecting the amount of PTA days determined by the recalculation.

Prior to the issuance of the certificate of correction, the USPTO will afford patentee an opportunity to be heard and request reconsideration. Accordingly, patentee has **one month or thirty (30) days**, whichever is longer, to file a request for reconsideration of this patent term adjustment calculation. See 35 U.S.C. 154(b)(3)(B)(ii) and 37 CFR 1.322(a)(4). No extensions of time will be granted under 37 CFR 1.136.

Patentee should use document code PET.OP if electronically filing a request for reconsideration of this patent term adjustment calculation. The patentee must also include the information required by 37 CFR 1.705(b)(2) and the fee required by 37 CFR 1.18(e). If patentee does not file a timely request for reconsideration of this patent term adjustment calculation including the information required by 37 CFR 1.705(b)(2) and the fee required by 37 CFR 1.18(e), the USPTO will issue a certificate of correction reflecting the PTA determination noted above.

Patentee should be aware that in order to preserve the right to review in the United States District Court for the District of Columbia of the USPTO patent term adjustment determination, patentee must ensure that he or she also take the steps required under 35 U.S.C. 154(b)(4)(A) in a timely manner. Nothing in the request for recalculation should be construed as providing an alternative time frame for commencing a civil action under 35 U.S.C. 154(b)(4)(A).

Any questions concerning this decision should be directed to the Office of Patent Legal Administration at 571-272-7702.

UNITED STATES PATENT AND TRADEMARK OFFICE

COMMISSIONER FOR PATENTS
UNITED STATES PATENT AND TRADEMARK OFFICE
P.O. BOX 1450
ALEXANDRIA, VA 22313-1450
www.uspto.gov

JAN 11 2005

In re Application of	:	
Harold Jarvis	:	
Serial No. 10/928,885	:	DECISION ON PETITION
Filed: August 30, 2004	:	TO MAKE SPECIAL
For: SPECIAL OPENING TOOL AND	:	
METHOD	:	

Applicant's petition, filed August 30, 2004, seeks to have this application made special because of the applicant's health, MPEP 708.02(III). The petition is GRANTED.

The petition has been reviewed and is found to be in compliance with the requirements for special status as set forth in Section 708.02(III) of the Manual of Patent Examining Procedures (MPEP).

PETITION GRANTED.

Richard A. Bertsch

Richard A. Bertsch, Director
Technology Center 3700

Daniel J. O'Connor
6720 Buckhorn Drive, #821
Indianapolis, IN 46254

UNITED STATES PATENT AND TRADEMARK OFFICE

Commissioner for Patents
United States Patent and Trademark Office
P.O. Box 1450
Alexandria, VA 22313-1450
www.uspto.gov

NATTER & NATTER
501 FIFTH AVENUE
SUITE 808
NEW YORK, NY 10017

COPY MAILED

NOV 0 2 2007

OFFICE OF PETITIONS

In re Application of	:	
Alexandr A. Panin, et. al.	:	
Application No. 10/928,889	:	ON PETITION
Filed: August 27, 2004	:	
Attorney Docket No. 04-4577	:	

This is a decision on the petition under 37 CFR 1.137(b), filed on August 10, 2006, to revive the above-identified application.

The application became abandoned for failure to respond to the non-final Office action mailed December 30, 2005.

The petition satisfies the requirements of 37 CFR 1.137(b), in that, petitioner has supplied (1) the reply in the form of an amendment; (2) the petition fee of $750; and (3) a proper statement of unintentional delay. Therefore, the petition is **GRANTED**.

This application file is being referred to Technology Center Art Unit 3744, for review of the amendment filed with the instant petition.

Telephone inquiries concerning this decision should be directed to the undersigned at (571) 272-3226.

Andrea Smith
Petitions Examiner
Office of Petitions

SPE RESPONSE FOR CERTIFICATE OF CORRECTION

Paper No.: _____

DATE : 6-26-08

TO SPE OF : ART UNIT 1648

SUBJECT : Request for Certificate of Correction for Appl. No.: 10/469737 Patent No.: 7267952

Please respond to this request for a certificate of correction within 7 days.

Please review the requested changes/corrections as shown in the **COCIN** document(s) in the IFW application image. No new matter should be introduced, nor should the scope or meaning of the claims be changed.

Should C of C be Approved

Please complete the response (see below) and forward the completed response to scanning using document code **COCX**.

Chris Yang
Certificates of Correction Branch
703-308-9390 ext. 117

Thank You For Your Assistance

The request for issuing the above-identified correction(s) is hereby:

Note your decision on the appropriate box.

- ☒ Approved — All changes apply.
- ☐ Approved in Part — Specify below which changes do not apply.
- ☐ Denied — State the reasons for denial below.

Comments: _____

BRUCE R. CAMPELL, PH.D
SUPERVISORY PATENT EXAMINER
TECHNOLOGY CENTER 1600

B Campell — SPE

1648 — Art Unit

UNITED STATES PATENT AND TRADEMARK OFFICE

UNITED STATES DEPARTMENT OF COMMERCE
United States Patent and Trademark Office
Address: COMMISSIONER FOR PATENTS
P.O. Box 1450
Alexandria, Virginia 22313-1450
www.uspto.gov

FOLEY HOAG, LLP
PATENT GROUP, WORLD TRADE CENTER WEST
155 SEAPORT BLVD
BOSTON, MA 02110

Mail Date: 04/21/2010

Applicant	: Stephen J. Lippard	: DECISION ON REQUEST FOR
Patent Number	: 7615377	: RECALCULATION of PATENT
Issue Date	: 11/10/2009	: TERM ADJUSTMENT IN VIEW
Appliction No	: 10/928,924	: OF WYETH AND NOTICE OF INTENT TO
Filed	: 08/27/2004	: ISSUE CERTIFICATE OF CORRECTION
		:

The Request for Recalculation is **GRANTED** to the extent indicated.

The patent term adjustment has been determined to be **1443** days. The USPTO will *sua sponte* issue a certificate of correction reflecting the amount of PTA days determined by the recalculation.

Prior to the issuance of the certificate of correction, the USPTO will afford patentee an opportunity to be heard and request reconsideration. Accordingly, patentee has **one month or thirty (30) days**, whichever is longer, to file a request for reconsideration of this patent term adjustment calculation. See 35 U.S.C. 154(b)(3)(B)(ii) and 37 CFR 1.322(a)(4). No extensions of time will be granted under 37 CFR 1.136.

Patentee should use document code PET.OP if electronically filing a request for reconsideration of this patent term adjustment calculation. The patentee must also include the information required by 37 CFR 1.705(b)(2) and the fee required by 37 CFR 1.18(e). If patentee does not file a timely request for reconsideration of this patent term adjustment calculation including the information required by 37 CFR 1.705(b)(2) and the fee required by 37 CFR 1.18(e), the USPTO will issue a certificate of correction reflecting the PTA determination noted above.

Patentee should be aware that in order to preserve the right to review in the United States District Court for the District of Columbia of the USPTO patent term adjustment determination, patentee must ensure that he or she also take the steps required under 35 U.S.C. 154(b)(4)(A) in a timely manner. Nothing in the request for recalculation should be construed as providing an alternative time frame for commencing a civil action under 35 U.S.C. 154(b)(4)(A).

Any questions concerning this decision should be directed to the Office of Patent Legal Administration at 571-272-7702.

UNITED STATES PATENT AND TRADEMARK OFFICE

Commissioner for Patents
United States Patent and Trademark Office
P.O. Box 1450
Alexandria, VA 22313-1450
www.uspto.gov

FEB 18 2005

MYRIAD GENETICS INC.
INTELLECUTAL PROPERTY DEPARTMENT
320 WAKARA WAY
SALT LAKE CITY UT 84108

In re Application of	:
Edward Hao Mang Koo et al	:
Serial No.: 10/928,925	: PETITION TO MAKE SPECIAL
Filed: August 27, 2004	:
Attorney Docket No.: 5802.10	:

This is in response to the petition filed January 18, 2005, to make the above-identified application special under the provisions of 37 CFR 1.102(d) based on infringement.

M.P.E.P. 708.02 states with respect to Infringement as a reasons to make an application special:

Subject to a requirement for a further showing as may be necessitated by the facts of a particular case, an application may be made special because of actual infringement (but not for prospective infringement) upon payment of the fee under 37 CFR 1.17(h) and the filing of a petition accompanied by a statement by the applicant, assignee, or an attorney/agent registered to practice before the Office alleging:
(A) That there is an infringing device or product actually on the market or method in use;
(B) That a rigid comparison of the alleged infringing device, product, or method with the claims of the application has been made, and that, in his or her opinion, some of the claims are unquestionably infringed; and
(C) That he or she has made or caused to be made a careful and thorough search of the prior art or has a good knowledge of the pertinent prior art.
Applicant must provide one copy of each of the references deemed most closely related to the subject matter encompassed by the claims if said references are not already of record. Models or specimens of the infringing product or that of the application should not be submitted unless requested.

Applicant has made the required statements and provided an IDS. However, it is also necessary to identify the specific claims infringed and provide some form of evidence of infringement – i.e. copies of labels of infringing products or advertising flyers, etc.

Therefor the petition is **DISMISSED**.

The petition fee of $130.00 will be charged to applicants' Deposit Account No. 50-1627, as directed.

Applicants may file a renewed petition supplying the additional items without any additional petition fee. Any renewed petition must be filed within TWO MONTHS in order to be considered timely

Should there be any questions with regard to this letter please contact William R. Dixon, Jr. by letter addressed to the Director, Technology Center 1600, P.O. Box 1450, Alexandria, VA 22313-1450, or by telephone at 571-272-0519 or by facsimile transmission to the Office general facsimile number 571-273-8300.

William R. Dixon, Jr.
Special Program Examiner
Technology Center 1600

UNITED STATES PATENT AND TRADEMARK OFFICE

Commissioner for Patents
United States Patent and Trademark Office
P.O. Box 1450
Alexandria, VA 22313-1450
www.uspto.gov

MAR 14 2005

MYRIAD GENETICS INC.
INTELLECUTAL PROPERTY DEPARTMENT
320 WAKARA WAY
SALT LAKE CITY UT 84108

In re Application of	:
Edward Hao Mang Koo et al	:
Serial No.: 10/928,925	: PETITION TO MAKE SPECIAL
Filed: August 27, 2004	:
Attorney Docket No.: 5802.10	:

This is in response to renewed the petition filed March 2, 2005, to make the above-identified application special under the provisions of 37 CFR 1.102(d) based on infringement.

Applicant has satisfied the provisions set forth in M.P.E.P. 708.02, II, relating to actual or potential infringement. Therefor the petition is **GRANTED**.

The application will be forwarded to the examiner for action on the merits commensurate with this decision.

Should there be any questions with regard to this letter please contact William R. Dixon, Jr. by letter addressed to the Director, Technology Center 1600, P.O. Box 1450, Alexandria, VA 22313-1450, or by telephone at 571-272-0519 or by facsimile transmission to the Office general facsimile number 571-273-8300.

William R. Dixon, Jr.
Special Program Examiner
Technology Center 1600

UNITED STATES PATENT AND TRADEMARK OFFICE

UNITED STATES DEPARTMENT OF COMMERCE
United States Patent and Trademark Office
Address: COMMISSIONER FOR PATENTS
P.O. Box 1450
Alexandria, Virginia 22313-1450
www.uspto.gov

FOLEY HOAG, LLP
PATENT GROUP, WORLD TRADE CENTER WEST
155 SEAPORT BLVD
BOSTON, MA 02110

Mail Date: 04/21/2010

Applicant	: Stephen J. Lippard	: DECISION ON REQUEST FOR
Patent Number	: 7651979	: RECALCULATION of PATENT
Issue Date	: 01/26/2010	: TERM ADJUSTMENT IN VIEW
Appliction No	: 10/928,929	: OF WYETH AND NOTICE OF INTENT TO
Filed	: 08/27/2004	: ISSUE CERTIFICATE OF CORRECTION
		:

The Request for Recalculation is **GRANTED** to the extent indicated.

The patent term adjustment has been determined to be **790** days. The USPTO will *sua sponte* issue a certificate of correction reflecting the amount of PTA days determined by the recalculation.

Prior to the issuance of the certificate of correction, the USPTO will afford patentee an opportunity to be heard and request reconsideration. Accordingly, patentee has **one month or thirty (30) days**, whichever is longer, to file a request for reconsideration of this patent term adjustment calculation. See 35 U.S.C. 154(b)(3)(B)(ii) and 37 CFR 1.322(a)(4). No extensions of time will be granted under 37 CFR 1.136.

Patentee should use document code PET.OP if electronically filing a request for reconsideration of this patent term adjustment calculation. The patentee must also include the information required by 37 CFR 1.705(b)(2) and the fee required by 37 CFR 1.18(e). If patentee does not file a timely request for reconsideration of this patent term adjustment calculation including the information required by 37 CFR 1.705(b)(2) and the fee required by 37 CFR 1.18(e), the USPTO will issue a certificate of correction reflecting the PTA determination noted above.

Patentee should be aware that in order to preserve the right to review in the United States District Court for the District of Columbia of the USPTO patent term adjustment determination, patentee must ensure that he or she also take the steps required under 35 U.S.C. 154(b)(4)(A) in a timely manner. Nothing in the request for recalculation should be construed as providing an alternative time frame for commencing a civil action under 35 U.S.C. 154(b)(4)(A).

Any questions concerning this decision should be directed to the Office of Patent Legal Administration at 571-272-7702.

SPE RESPONSE FOR CERTIFICATE OF CORRECTION

Paper No.: _____

DATE : 02/18/10

TO SPE OF : ART UNIT 1627

SUBJECT : Request for Certificate of Correction for Appl. No.: 10928949 Patent No.: 7060723

Please respond to this request for a certificate of correction within 7 days.

FOR IFW FILES:

Please review the requested changes/corrections as shown in the **COCIN** document(s) in the IFW application image. No new matter should be introduced, nor should the scope or meaning of the claims be changed.

Please complete the response (see below) and forward the completed response to scanning using document code **COCX**.

FOR PAPER FILES:

Please review the requested changes/corrections as shown in the attached certificate of correction. Please complete this form (see below) and forward it with the file to:

Certificates of Correction Branch (C of C)
Randolph Square 9D40-D
Palm Location 7580
You can fax the Directors/SPE response to 571-270-9990

Lamonte Newsome
Certificates of Correction Branch
703-756-1574

Thank You For Your Assistance

The request for issuing the above-identified correction(s) is hereby:
Note your decision on the appropriate box.

XApproved	**All** changes apply.
☐ **Approved in Part**	Specify below which changes **do not** apply.
☐ **Denied**	State the reasons for denial below.

Comments: /Sreeni Padmanabhan/ SPE AU 1627

SPE RESPONSE FOR CERTIFICATE OF CORRECTION

SPE	**Art Unit**

UNITED STATES PATENT AND TRADEMARK OFFICE

Commissioner for Patents
United States Patent and Trademark Office
P.O. Box 1450
Alexandria, VA 22313-1450
www.uspto.gov

INTELLECTUAL PROPERTY/TECHNOLOGY LAW
PO BOX 14329
RESEARCH TRIANGLE PARK, NC 27709

COPY MAILED

MAY 3 1 2006

OFFICE OF PETITIONS

In re Application of	:	
Mark L. Cobb et al	:	
Application No. 10/928,951	:	DECISION ON PETITION
Filed: August 27, 2004	:	TO MAKE SPECIAL UNDER
Attorney Docket No. 4229-101	:	37 CFR 1.102(d)
	:	

This is a decision on the petition under 37 CFR § 1.102(d), filed May 3, 2006, to make the above-identified application special based on applicants who are small entities filing biotechnology applications as set forth in M.P.E.P. § 708.02, Section XII.

The petition is **GRANTED**.

A grantable petition to make an application special under 37 CFR § 1.102(d) and MPEP § 708.02, Section XII: Special Status for Applications Relating to Biotechnology Filed by Applicants Who are Small Entities, must be accompanied by (1) the petition fee under 37 CFR 1.17(h); and (2) state:

> (A) That small entity status has been established or include a statement establishing small entity status;
> (B) That the subject of the patent application is a major asset of the small entity; and
> (C) That the development of the technology will be significantly impaired if examination of the patent application is delayed, including an explanation of the basis for making the statement.

The petition complies with all the above stated requirements. Accordingly, the above-identified application has been accorded "special" status.

Telephone inquiries concerning this decision should be directed to Wan Laymon at 571-272-3220.

All other inquiries concerning either the examination or status of the application should be directed to the Technology Center.

This application is being referred to Technology Center Art Unit 1645 for action on the merits commensurate with this decision.

Amelia Au
Petitions Examiner
Office of Petitions

UNITED STATES PATENT AND TRADEMARK OFFICE

COMMISSIONER FOR PATENTS
UNITED STATES PATENT AND TRADEMARK OFFICE
P.O. BOX 1450
ALEXANDRIA, VA 22313-1450
www.uspto.gov

Paper No.

LAW OFFICES OF ALBERT WAI-KIT
CHAN, PLLC
WORLD PLAZA, SUITE 604
141-07 20TH AVENUE
WHITESTONE NY 11357

MAILED

JUL 28 2009

OFFICE OF PETITIONS

In re Application of	:	
Guangwen Wei	:	
Application No. 10/928,956	:	ON APPLICATION FOR
Filed: August 26, 2004	:	PATENT TERM ADJUSTMENT
Atty Docket No. 792-C-US	:	

This is in response to the APPLICATION FOR PATENT TERM ADJUSTMENT filed on December 2, 2008. Applicant requests that the determination of patent term adjustment be corrected from one hundred sixty-three (163) days to two hundred sixty-eight (268) days. Applicant requests this correction, in part, on the basis that the Office will take in excess of three years to issue this patent.

To the extent that the instant application for patent term adjustment requests reconsideration of the patent term adjustment as it relates to the Office's failure to issue the patent within 3 years of the filing date, the application for patent term adjustment under 37 CFR 1.705(b) is **DISMISSED as PREMATURE**.

Knowledge of the actual date the patent issues is required to calculate the amount, if any, of additional patent term patentee is entitled to for Office failure to issue the patent within 3 years. See § 1.702(b). (This is true even where a request for continued examination (RCE) was filed). The computer will not undertake the § 1.702(b) calculation until the actual date of issuance of the patent has been determined. Likewise, the computer will not calculate any further Office delay under §

1.702(a)(4) or applicant delay under § 1.704(c)(10) until the actual date of issuance of the patent has been determined. As such, the Office can not make a determination on the correctness of the patent term adjustment until the patent has issued.

Requesting reconsideration of the patent term adjustment to be indicated on the patent under 37 CFR 1.705(b) based on the initial determination of patent term adjustment and a projected issuance date of the patent (or even the filing date of the request for continued examination) is premature. Accordingly, it is appropriate to dismiss as premature such a request.

Rather than file an application for patent term adjustment under 37 CFR 1.705(b) contesting the 37 CFR 1.702(b) calculation at the time of the mailing of the notice of allowance, applicant is advised that they may wait until the time of the issuance of the patent and file a request for reconsideration of the patent term adjustment pursuant to 37 CFR 1.705(d). As the USPTO does not calculate the amount of time earned pursuant to 37 CFR 1.702(b) until the time of the issuance of the patent, the Office will consider any request for reconsideration of the patent term adjustment due to an error in the calculation of 37 CFR 1.702(b) to be timely if the request for reconsideration is filed within two months of the issuance of the patent. However, as to all other bases for contesting the initial determination of patent term adjustment received with the notice of allowance, applicant must timely file an application for patent term adjustment prior to the payment of the issue fee[1].

The Office acknowledges submission of the $200.00 fee set forth in 37 CFR 1.18(e) for consideration of the application for patent term adjustment under 37 CFR 1.705(b).

Any request for reconsideration of the patent term adjustment indicated on the patent must be timely filed within 2 months

---

[1] For example, if applicant disputes both the calculation of patent term adjustment under 37 CFR 1.702(a)(1) for Office failure to mail a first Office action or notice of allowance not later than fourteen months after the date on which the application was filed and under 37 CFR 1.702(b) for Office failure to issue a patent within three years of the actual filing date of the application, then applicant must still timely file an application for patent term adjustment prior to the payment of the issue fee to contest the calculation of Office delay in issuing a first Office action or notice of allowance. See 37 CFR 1.705(b) and 35 U.S.C. 154(b)(3)(B). A dispute as to the calculation of the §1.702(a)(1) period raised on request for reconsideration of patent term adjustment under 37 CFR 1.705(d) will be dismissed as untimely filed.

after issuance pursuant to 37 CFR 1.705(d) and must include payment of the required fee under 37 CFR 1.18(e).

To the extent that the instant application for patent term adjustment requests reconsideration of the PTA at the time of the mailing of the Notice of Allowance, the request is **GRANTED TO THE EXTENT INDICATED**.

The Office has updated the PALM and PAIR screens to reflect that the correct Patent Term Adjustment (PTA) determination at the time of the mailing of the Notice of Allowance is ONE HUNDRED SEVENTY (170) days. A copy of the updated PAIR screen, showing the correct determination, is enclosed.

On September 22, 2008, the Office mailed a Determination of Patent Term Adjustment under 35 U.S.C. 154(b) in the above-identified application. Applicant was advised that the patent term adjustment to date was one hundred sixty-three (163) days. The period of adjustment was 286 days of PTO delay and 163 days of applicant delay.

On December 22, 2008, the issue fee was paid. The subject application for term patent adjustment was filed concurrently with the issue fee, and was therefore timely filed.

Applicant requests removal of the period of reduction of 49 days under 37 CFR 1.704(c)(8) for the filing, on March 4, 2008, of a supplemental reply or other paper filed 49 days after the filing of a reply filed on January 15, 2008. Applicant asserts that the reply was expressly requested by the examiner.

37 CFR 1.704(c)(8) states that circumstances that constitute a failure of the applicant to engage in reasonable efforts to conclude processing or examination of an application also include the following circumstances, which will result in the following reduction of the period of adjustment set forth in § 1.703 to the extent that the periods are not overlapping: submission of a supplemental reply or other paper, other than a supplemental reply or other paper expressly requested by the examiner, after a reply has been filed, in which case the period of adjustment set forth in § 1.703 shall be reduced by the number of days, if any, beginning on the day after the date the initial reply was filed and ending on the date that the supplemental reply or other such paper was filed.

A review of the record supports a conclusion that the supplemental amendment filed on March 4, 2008 was expressly requested by the examiner within the meaning of 37 CFR 1.704(c)(8). As such, entry of a period of reduction of 49 days for the filing of the supplemental reply or other paper is not warranted and will be removed.

However, entry an additional period of reduction pursuant to 37 CFR 1.704(c)(10) is warranted. On June 25, 2008, a notice of allowance was mailed. After the filing of a request for continued examination (RCE) in response, on August 12, 2008, applicants filed an information disclosure statement (IDS). On September 22, 2008, a notice of allowance acknowledging the IDS was mailed.

37 CFR 1.704(c)(10) states that circumstances that constitute a failure of the applicant to engage in reasonable efforts to conclude processing or examination of an application also include the following circumstances, which will result in the following reduction of the period of adjustment set forth in § 1.703 to the extent that the periods are not overlapping: submission of an amendment under § 1.312 or other paper after a notice of allowance has been given or mailed, in which case the period of adjustment set forth in § 1.703 shall be reduced by the lesser of: (i) The number of days, if any, beginning on the date the amendment under § 1.312 or other paper was filed and ending on the mailing date of the Office action or notice in response to the amendment under § 1.312 or such other paper; or (ii) Four months.

37 CFR 1.704(d) states that a paper containing only an information disclosure statement in compliance with §§ 1.97 and 1.98 will not be considered a failure to engage in reasonable efforts to conclude prosecution (processing or examination) of the application under paragraphs (c)(6), (c)(8), (c)(9), or (c)(10) of this section if it is accompanied by a statement that each item of information contained in the information disclosure statement was first cited in any communication from a foreign patent office in a counterpart application and that this communication was not received by any individual designated in § 1.56(c) more than thirty days prior to the filing of the information disclosure statement. This thirty-day period is not extendable.

The IDS filed on August 12, 2008 does not include the statement set forth at 37 CFR 1.704(d).

Accordingly, entry of a period of reduction of 42 days is warranted.

In view thereof, the correct patent term adjustment at the time of the mailing of the notice of allowance is one hundred seventy (170) days (286 days of office delay less 116 (12 + 24 + 38 + 42) days of applicant delay).

Applicants state that the patent is not subject to a terminal disclaimer.

The Office acknowledges submission of the $200.00 fee set forth in 37 CFR 1.18(e). No additional fees are required.

The application is being forwarded to the Office of Data Management for issuance of the patent. The patent term adjustment indicated on the patent (as shown on the Issue Notification mailed about three weeks prior to patent issuance) will include any additional adjustment accrued both for Office delay in issuing the patent more than four months after payment of the issue fee and satisfaction of all outstanding requirements, and for the Office taking in excess of three years to issue the patent (to the extent that the three-year period does not overlap with periods already accorded).

Telephone inquiries specific to this decision should be directed to Senior Petitions Attorney Douglas I. Wood at (571) 272-3231.

Nancy Johnson
Senior Petitions Attorney
Office of Petitions

Encl: Copy of adjusted PAIR calculation

Day : Tuesday
Date: 7/28/2009

PALM INTRANET

Time: 11:45:20

PTA Calculations for Application: 10/928956			
Application Filing Date:	08/26/2004	PTO Delay (PTO):	286
Issue Date of Patent:		Three Years:	0
Pre-Issue Petitions:	0	Applicant Delay (APPL):	123
Post-Issue Petitions:	0	Total PTA (days):	170
PTO Delay Adjustment:	7		

File Contents History

Number	Date	Contents Description	PTO	APPL	START
136	07/27/2009	ADJUSTMENT OF PTA CALCULATION BY PTO		42	
135	07/27/2009	ADJUSTMENT OF PTA CALCULATION BY PTO	49		
125	09/22/2008	MAIL NOTICE OF ALLOWANCE			
124	09/17/2008	ISSUE REVISION COMPLETED			
123	09/17/2008	DOCUMENT VERIFICATION			
122	09/17/2008	NOTICE OF ALLOWANCE DATA VERIFICATION COMPLETED			
121	09/15/2008	NOTICE OF ALLOWABILITY			
120	08/12/2008	INFORMATION DISCLOSURE STATEMENT CONSIDERED			
119	08/12/2008	INFORMATION DISCLOSURE STATEMENT CONSIDERED			
118	07/07/2008	INFORMATION DISCLOSURE STATEMENT CONSIDERED			
116	08/12/2008	INFORMATION DISCLOSURE STATEMENT (IDS) FILED			
115	08/12/2008	INFORMATION DISCLOSURE STATEMENT (IDS) FILED			
114	07/07/2008	REFERENCE CAPTURE ON IDS			
113	07/07/2008	INFORMATION DISCLOSURE STATEMENT (IDS) FILED			
112	08/06/2008	DATE FORWARDED TO EXAMINER			
111	07/07/2008	REQUEST FOR CONTINUED EXAMINATION (RCE)			
110	08/06/2008	DISPOSAL FOR A RCE/CPA/129 (EXPRESS ABANDONMENT IF CPA)			
109	07/11/2008	SEQUENCE FORWARDED TO PUBS ON TAPE			
108	07/07/2008	INFORMATION DISCLOSURE STATEMENT (IDS) FILED			

107	07/07/2008	WORKFLOW - REQUEST FOR RCE - BEGIN			
106	06/30/2008	EXPORT TO INITIAL DATA CAPTURE			
105	06/25/2008	MAIL NOTICE OF ALLOWANCE			
104	06/23/2008	ISSUE REVISION COMPLETED			
103	06/23/2008	DOCUMENT VERIFICATION			
102	06/23/2008	NOTICE OF ALLOWANCE DATA VERIFICATION COMPLETED			
101	06/23/2008	NOTICE OF ALLOWABILITY			
100	05/15/2008	INFORMATION DISCLOSURE STATEMENT CONSIDERED			
98	05/15/2008	INFORMATION DISCLOSURE STATEMENT (IDS) FILED			
97	06/05/2008	DATE FORWARDED TO EXAMINER			
96	05/15/2008	REQUEST FOR CONTINUED EXAMINATION (RCE)			
95	06/05/2008	DISPOSAL FOR A RCE/CPA/129 (EXPRESS ABANDONMENT IF CPA)			
94	05/15/2008	INFORMATION DISCLOSURE STATEMENT (IDS) FILED			
93	05/15/2008	WORKFLOW - REQUEST FOR RCE - BEGIN			
92	04/23/2008	PUBS CASE REMAND TO TC			
91	04/30/2008	WORKFLOW - QUERY REQUEST - BEGIN			
90	04/17/2008	SEQUENCE FORWARDED TO PUBS ON TAPE			
89	04/07/2008	EXPORT TO INITIAL DATA CAPTURE			
88	04/02/2008	MAIL EXAMINER'S AMENDMENT			
87	04/02/2008	MAIL NOTICE OF ALLOWANCE			
86	03/06/2008	ISSUE REVISION COMPLETED			
85	03/06/2008	NOTICE OF ALLOWANCE DATA VERIFICATION COMPLETED			
84	03/04/2008	ALLOWED CASE RETURNED TO THE EXAMINER FOR CLERICAL PROCESSING			
83	03/04/2008	DOCUMENT VERIFICATION			
82	03/03/2008	EXAMINER'S AMENDMENT COMMUNICATION			
81	03/03/2008	NOTICE OF ALLOWABILITY			
80	03/04/2008	NEW OR ADDITIONAL DRAWING FILED			
79	03/04/2008	DATE FORWARDED TO EXAMINER			
78	03/04/2008	SUPPLEMENTAL RESPONSE		49	64
75	03/06/2008	CASE DOCKETED TO EXAMINER IN GAU			
65	01/25/2008	DATE FORWARDED TO EXAMINER			

64	01/15/2008	RESPONSE AFTER EX PARTE QUAYLE ACTION			
63	01/10/2008	MAIL EX PARTE QUAYLE ACTION (PTOL - 326)			
62	01/07/2008	EX PARTE QUAYLE ACTION			
61	10/22/2007	INFORMATION DISCLOSURE STATEMENT CONSIDERED			
59	10/22/2007	INFORMATION DISCLOSURE STATEMENT (IDS) FILED		0	55
58	10/31/2007	DATE FORWARDED TO EXAMINER			
57	08/09/2007	RCE- AF PROCESSED			
56	10/31/2007	DATE FORWARDED TO EXAMINER			
55	10/22/2007	REQUEST FOR CONTINUED EXAMINATION (RCE)		38	47
54	10/31/2007	DISPOSAL FOR A RCE/CPA/129 (EXPRESS ABANDONMENT IF CPA)			
53	10/22/2007	REQUEST FOR EXTENSION OF TIME - GRANTED			
52	10/22/2007	INFORMATION DISCLOSURE STATEMENT (IDS) FILED			
51	10/22/2007	INFORMATION DISCLOSURE STATEMENT (IDS) FILED			
50	10/22/2007	WORKFLOW - REQUEST FOR RCE - BEGIN			
49	08/15/2007	DATE FORWARDED TO EXAMINER			
48	08/09/2007	AMENDMENT AFTER FINAL REJECTION			
47	06/14/2007	MAIL FINAL REJECTION (PTOL - 326)			
46	06/11/2007	FINAL REJECTION			
45	04/20/2007	INFORMATION DISCLOSURE STATEMENT CONSIDERED			
44	01/09/2006	INFORMATION DISCLOSURE STATEMENT CONSIDERED			
43	01/09/2006	INFORMATION DISCLOSURE STATEMENT (IDS) FILED			
42.7	04/20/2007	ELECTRONIC INFORMATION DISCLOSURE STATEMENT		24	39
42	04/20/2007	INFORMATION DISCLOSURE STATEMENT (IDS) FILED			
41	04/06/2007	CRF IS FLAWED TECHNICALLY / NOT ENTERED INTO DATABASE			
40	04/02/2007	DATE FORWARDED TO EXAMINER			
39	03/27/2007	RESPONSE AFTER NON-FINAL ACTION		12	37
38	03/27/2007	REQUEST FOR EXTENSION OF TIME - GRANTED			

37	12/15/2006	MAIL NON-FINAL REJECTION			
36	12/11/2006	NON-FINAL REJECTION			
35	06/27/2005	INFORMATION DISCLOSURE STATEMENT CONSIDERED			
32	11/20/2006	DATE FORWARDED TO EXAMINER			
31	11/03/2006	RESPONSE TO ELECTION / RESTRICTION FILED			
30	11/03/2006	REQUEST FOR EXTENSION OF TIME - GRANTED			
29	08/08/2006	MAIL RESTRICTION REQUIREMENT	286		-1
28	08/05/2006	REQUIREMENT FOR RESTRICTION / ELECTION			
27	01/26/2006	IFW TSS PROCESSING BY TECH CENTER COMPLETE			
26	08/26/2005	PRELIMINARY AMENDMENT			
23	01/26/2006	CASE DOCKETED TO EXAMINER IN GAU			
22	06/27/2005	REFERENCE CAPTURE ON IDS			
21.7	06/27/2005	INFORMATION DISCLOSURE STATEMENT (IDS) FILED			
21	06/27/2005	INFORMATION DISCLOSURE STATEMENT (IDS) FILED			
20	04/01/2005	APPLICATION DISPATCHED FROM OIPE			
19	04/04/2005	APPLICATION IS NOW COMPLETE			
18	03/24/2005	CRF IS GOOD TECHNICALLY / ENTERED INTO DATABASE			
15	12/28/2004	ADDITIONAL APPLICATION FILING FEES			
14	12/28/2004	CRF DISK HAS BEEN RECEIVED BY PREEXAM / GROUP / PCT			
13	01/21/2005	SEQUENCE ERRORS			
12	12/22/2004	ADDITIONAL APPLICATION FILING FEES			
11	12/22/2004	CRF DISK HAS BEEN RECEIVED BY PREEXAM / GROUP / PCT			
10	12/22/2004	A SET OF SYMBOLS AND PROCEDURES, PROVIDED TO THE PTO ON A SET OF COMPUTER LISTINGS, THAT DESCRIBE IN			
9	12/22/2004	A STATEMENT BY ONE OR MORE INVENTORS SATISFYING THE REQUIREMENT UNDER 35 USC 115, OATH OF THE APPLIC			
7	01/11/2005	CRF IS FLAWED TECHNICALLY / NOT ENTERED INTO DATABASE			
6	10/29/2004	NOTICE MAILED--APPLICATION INCOMPLETE--FILING DATE ASSIGNED			
4	10/04/2004	CLEARED BY OIPE CSR			

3	10/04/2004	CASE CLASSIFIED BY OIPE			
2	09/16/2004	IFW SCAN & PACR AUTO SECURITY REVIEW			
1	08/26/2004	INITIAL EXAM TEAM NN			

Search Another: Application# [ ] Search

EXPLANATION OF PTA CALCULATION

EXPLANATION OF PTE CALCULATION

To go back, right click here and select Back. To go forward, right click here and select Forward. To refresh, right click here and select Refresh.

Back to OASIS | Home page

UNITED STATES PATENT AND TRADEMARK OFFICE

Commissioner for Patents
United States Patent and Trademark Office
P.O. Box 1450
Alexandria, VA 22313-1450
www.uspto.gov

Paper No.

LAW OFFICES OF ALBERT WAI-KIT CHAN, PLLC
141-07 20TH AVENUE
WORLD PLAZA, SUITE 604
WHITESTONE NY 11357

MAILED

MAY 04 2010

OFFICE OF PETITIONS

In re Patent No. 7585647	: DECISION ON REQUEST
Guangwen Wei	: FOR
Issue Date: 09/08/2009	: RECONSIDERATION OF
Application No. 10/928956	: PATENT TERM ADJUSTMENT
Filed: 08/26/2004	: and
Atty Docket No. 792-CU-S	: NOTICE OF INTENT TO ISSUE
	: CERTIFICATE OF CORRECTION

This is a decision on the petition filed on October 1, 2009, which is being treated as a petition under 37 CFR 1.705(d) requesting that the patent term adjustment indicated on the above-identified patent be corrected to indicate that the term of the above-identified patent is extended or adjusted by three hundred sixty-five (365) days.

The petition to correct the patent term adjustment indicated on the above-identified patent to indicate that the term of the above-identified patent is extended or adjusted by three hundred sixty-five (365) days is **GRANTED**.

The Office acknowledges submission of the $200.00 fee set forth in 37 CFR 1.18(e). No additional fees are required.

The application is being forwarded to the Certificates of Correction Branch for issuance of a certificate of correction. The Office will issue a certificate of correction indicating that the term of the above-identified patent is extended or adjusted by **three hundred sixty-five (365)** days.

Telephone inquiries specific to this matter should be directed to the undersigned at (571) 272-3231.

DWood

Douglas I. Wood
Senior Petitions Attorney
Office of Petitions

Enclosure: Copy of DRAFT Certificate of Correction

UNITED STATES PATENT AND TRADEMARK OFFICE

CERTIFICATE OF CORRECTION

PATENT : 7,585,647 B2

DATED : **September 8, 2009** **DRAFT**

INVENTOR(S) : Wei

It is certified that error appears in the above-identified patent and that said Letters Patent is hereby corrected as shown below:

On the cover page,

[*] Notice: Subject to any disclaimer, the term of this patent is extended or adjusted under 35 USC 154(b) by 309 days.

Delete the phrase "by 309 days" and insert – by 365 days--

UNITED STATES PATENT AND TRADEMARK OFFICE

Commissioner for Patents
United States Patent and Trademark Office
P.O. Box 1450
Alexandria, VA 22313-1450
www.uspto.gov

EARLE JENNINGS
8 KENYON AVE
KENSINGTON, CA 94708

COPY MAILED
JUL 18 2008

In re Application of	:	
Susan POTTISH, et al	:	
Application No. 10/928,957	:	DECISION ON PETITION
Filed: August 26, 2004	:	
Attorney Docket No. TUBE-002US	:	

This is a decision on the petition under the unintentional provisions of 37 CFR 1.137(b), filed February 7, 2008, to revive the above-identified application.

The petition is **GRANTED**.

The application became abandoned for failure to submit corrected drawings in a timely manner in reply to the Notice of Drawing Inconsistency With Specification (Notice), mailed November 2, 2007, which set a period for reply of one (1) month or within the time remaining in the time period set forth in the Notice of Allowability mailed October 1, 2007, which set a period for reply of three (3) months, whichever it longer. Accordingly, this application became abandoned on January 2, 2008.

The petition satisfies the requirements of 37 CFR 1.137(b) in that petitioner has supplied (1) the reply in the form of corrected drawings; (2) the petition fee of $770; and (3) a proper statement of unintentional delay.

Telephone inquiries concerning this decision should be directed to Diane Goodwyn at (571)272-6735.

This application is being referred to the Office of Data Management for further processing.

Thurman Page
Petitions Examiner
Office of Petitions

UNITED STATES PATENT AND TRADEMARK OFFICE

Commissioner for Patents
United States Patent and Trademark Office
P.O. Box 1450
Alexandria, VA 22313-1450
www.uspto.gov

KENNETH H. JACK
2121 MAPLE
WICHITA, KS 67213

COPY MAILED

JUL 1 0 2006

OFFICE OF PETITIONS

In re Application of	:	
Eric J. Carroll	:	
Application No. 10/928,967	:	ON PETITION
Filed: August 27, 2004	:	
Attorney Docket No. DESERTSTEEL	:	

This is a decision on the petition under 37 CFR 1.137(b), filed April 7, 2006, to revive the above-identified application.

The petition is **GRANTED**.

The above-identified application became abandoned for failure to submit the issue fee in a timely manner in reply to the Notice of Allowance mailed November 29, 2005, which set a statutory period for reply of three (3) months. Accordingly, the above-identified application became abandoned on March 1, 2006.

The petition satisfies the conditions for revival pursuant to the provisions of 37 CFR 1.137(b) in that (1) the reply in the form of the issue fee; (2) the petition fee; and (3) the required statement of unintentionally delay have been received. Accordingly, the issue fee/publication fee are accepted as having been unintentional delayed.

Telephone inquiries concerning this decision should be directed to Wan Laymon at (571) 272-3220.

This matter is being referred to Publishing Division.

Wan Laymon
Wan Laymon
Petitions Examiner
Office of Petitions

UNITED STATES PATENT AND TRADEMARK OFFICE

COMMISSIONER FOR PATENTS
UNITED STATES PATENT AND TRADEMARK OFFICE
P.O. BOX 1450
ALEXANDRIA, VA 22313-1450
www.uspto.gov

Paper No.

COPY MAILED

NOV 22 2004

OFFICE OF PETITIONS

DUANE MORRIS LLP
PO BOX 5203
PRINCETON, NJ 08543-5203

In re Application of:	:	
Charles Frederick Fey III	:	
Application No. 10/928,986	:	DECISION DISMISSING
Deposited: August 27, 2004	:	PETITION UNDER
Attorney Docket No.: GE-07099	:	37 CFR 1.47

This is in response to the Petition Pursuant to 37 CFR 1.47(a) for Filing Without Inventor's Signature and Statement of Facts Therefor, filed August 27, 2004 with the application papers.

The petition is **dismissed**.

Rule 47 applicant is given TWO (2) MONTHS from the mailing date of this decision to reply, correcting the below-noted deficiencies. Any reply should be entitled "Request for Reconsideration of Petition Under 37 CFR 1.47(b)"; should only address the deficiencies noted below, except that the reply may include an oath or declaration executed by the non-signing inventor, and be addressed to Petitions Attorney Derek L. Woods. Failure to respond will result in abandonment of the application. Any extensions of time will be governed by 37 CFR 1.136(a).

The instant petition was filed with the deposit of the above identified application papers on August 27, 2004. The petition is filed by Attorney Meise, who lists himself as an inventor. However, a review of the petition reveals that the inventor is Charles Frederick Fey III. The petition provides that Attorney Meise "was asked to prepare a patent application based on a seven page written invention disclosure prepared by Charles Frederick Fey III." *Petition* at p.1. The petition further provides that Attorney Meise "reviewed the written invention disclosure, [he] spoke with Charles Fey III by telephone but was not able to produce a patentable claim. Mr. Fey expressed some doubts about putting effort into preparation of a patent application in the absence of an honorarium." *Petition* at p.2.

A review of the oath/declaration filed with the application reveals that the attorney has listed himself as an inventor, and

the correspondence address is that of the attorney, and not that of the Law Firm. As such, it appears that the attorney is not signing the oath/declaration on behalf of the putative owner, Lockheed Martin, but as an inventor.

The inventor is defined as the person or persons who actually invented the subject matter claimed in the patent (application). *See, Beech Aircraft Corp. v. EDO Corp.*, 990 F.2d 1237 (1993).

Regarding the instant petition filed under 37 CFR 1.47(a), a petition under 37 CFR 1.47(a) is filed to allow the other inventor(s) to proceed with the application on behalf of himself or herself and the nonsigning inventor(s).

It appears from the petition that there is but one inventor in the above-identified application. Applicant must demonstrate to this Office a sound basis to support his claim of inventorship in the application.

If there is but one inventor in this application, the proper venue for relief is a petition under 37 CFR 1.147(b), which is filed to allow a person to whom an inventor has assigned or agreed in writing to assign the invention, or who otherwise shows sufficient proprietary interest in the matter justifying such action, to make application on behalf of and as agent for all inventors. A petition under 37 CFR 1.47(b) is filed when no inventor has executed the oath/declaration, and it allows an assignee, or applicant who otherwise shows sufficient proprietary interest in the matter justifying such action, to make application on behalf of and as agent for all inventors.

The requirements for a grantable petition under 37 CFR 1.47(b) are: (1) proof that the non-signing inventor cannot be reached or refuses to sign the oath or declaration after having been presented with the application papers (specification, claims and drawings); (2) an acceptable oath or declaration in compliance with 35 U.S.C. §§ 115 and 116; (3) the petition fee; (4) a statement of the last known address of the non-signing inventor(s); (5) proof of proprietary interest; and (6) proof of irreparable harm.

As to item (1), 37 CFR 1.47(b) provides for two separate and distinct circumstances to allow an application to proceed without the signature of the inventor(s). The first is where an inventor refuses to sign an application after having been presented with the application for signature, and the second is where an inventor cannot be found or reached after diligent effort. The situations are separate and distinct and require separate and distinct steps in order to allow a person to whom an inventor has assigned or agreed in writing to assign the invention, or who otherwise shows sufficient proprietary interest in the matter justifying such action, to make application on behalf of and as agent for all inventors.

Where the whereabouts of the nonsigning inventor are known, what is required is that the application (specification, claims and drawings, along with the oath or declaration for signature) be presented (mailed) to the nonsigning inventor at his or her last known address, before a refusal to join the application can be alleged.

Conversely, where the nonsigning inventor cannot be found or reached after diligent effort, a diligent effort to find or reach the nonsigning inventor is required before an applicant is allowed to proceed with the application. A statement of facts should be submitted that fully describes the exact facts which are relied upon to establish that a diligent effort was made. The statement of facts must be signed by a person with firsthand knowledge of the facts recited therein. Copies of documentary evidence that support a finding that the nonsigning inventor cannot be found or reached should be made part of the statement. At the very least a search of the internet and local telephone directories should be undertaken in an effort to locate the nonsigning inventor. The results of said searches should be included in the petition. *See* MPEP 409.03(d)

As to item (2), the Office notes that pursuant to Section 409.03(b)(A) of the Manuel for Patent Examining Procedure:

> Where a corporation is the 37 CFR 1.47(b) applicant, an officer (President, Vice-President, Secretary, Treasurer or Chief Executive Officer) thereof should normally sign the necessary oath or declaration. A corporation may authorize any person, including an

> attorney or agent registered to practice before the Patent and Trademark Office, to sign the application oath or declaration on its behalf. Where an oath or declaration is signed by a registered attorney or agent on behalf of a corporation, either proof of the attorney's or agent's authority in the form of a statement signed by an appropriate corporate officer must be submitted, or *the attorney or agent may simply state that he or she is authorized to sign on behalf of the corporation.* Where the oath or declaration is being signed on behalf of an assignee, see MPEP Section 324. An inventor may not authorize another individual to act as his or her agent to sign the application oath or declaration on his or her behalf. *Staeger v. Commissioner*, 189 USPQ 272 (D.D.C. 1976), *In re Striker*, 182 USPQ 507 (Comm'r Pat. 1973). (Emphasis supplied). Where an application is executed by one other than the inventor, the declaration required by 37 CFR 1.63 must state the full name, residence, post office address, and citizenship of the nonsigning inventor. Also, the title or position of the person signing must be stated if signing on behalf of a corporation under 37 CFR 1.47(b).

As to item (5), applicant failed to show or provide proof that Lockheed Martin Corporation ("Lockheed Martin") has sufficient proprietary interest in the subject matter to justify the filing of the application (see MPEP 409.03(f)). Acceptable proof would include a copy of the employment agreement between the non-signing inventor and the Rule 47(b) applicant (company), a copy of an assignment agreement showing that the invention disclosed in the application is assigned to the Rule 47(b) applicant, or a legal memorandum signed by an attorney familiar with the law of the jurisdiction stating that a court of competent jurisdiction would by the weight of authority in that jurisdiction award the title of the invention to the Rule 47(b) applicant.

As to item (6), a statement to the effect that the granting of the petition is necessary to prevent irreparable harm is sufficient.

Further correspondence with respect to this matter should be addressed as follows:

By mail: Commissioner for Patents
PO Box 1450
Alexandria, VA 22313-1450

By FAX: (703) 872-9306
Attn: Office of Petitions

By hand: 2201 South Clark Place
Customer Window
Crystal Plaza Two, Lobby Room 1B03
Arlington, VA 22202

Telephone inquiries concerning this decision should be directed to the undersigned at (703) 305-0014.

Derek L. Woods
Attorney Advisor
Office of Petitions

UNITED STATES PATENT AND TRADEMARK OFFICE

COMMISSIONER FOR PATENTS
UNITED STATES PATENT AND TRADEMARK OFFICE
P.O. BOX 1450
ALEXANDRIA, VA 22313-1450
www.uspto.gov

DUANE MORRIS LLP
PO BOX 5203
PRINCETON, NJ 08543-5203

COPY MAILED

MAY 09 2005

OFFICE OF PETITIONS

In re Application of:
Charles Frederick Fey III
Application No. 10/928,986
Filed: April 6, 2004
Attorney Docket No.: 2002B098/2

DECISION GRANTING

This is in response to the Supplemental Statement of Facts, filed January 26, 2005. The correspondence is properly treated as a Request for Reconsideration Petition Under 37 CFR 1.47(a), to allow the other inventor(s) to proceed with the application on behalf of himself or herself and the nonsigning inventor(s).

The petition is **granted**.

The above-identified application and papers have been reviewed and found in compliance with 37 CFR 1.47(a). This application is hereby accorded Rule 1.47(a) status.

Petitioner has shown that the non-signing inventor, Charles Fey III, refuses to join in the application.

As provided in Rule 1.47(a), this Office will forward notice of this application's filing to the non-signing inventor at the addresses given in the Petition. Notice of the filing of this application will also be published in the Official Gazette.

The application file is being returned to the Office of Initial Patent Examination for continued processing.

Telephone inquiries related to this decision may be directed to the undersigned at (571) 272-3232.

Derek L. Woods
Petitions Attorney
Office of Petitions

UNITED STATES PATENT AND TRADEMARK OFFICE

COMMISSIONER FOR PATENTS
UNITED STATES PATENT AND TRADEMARK OFFICE
P.O. BOX 1450
ALEXANDRIA, VA 22313-1450
www.uspto.gov

Charles Frederick Fey III
308 CATAWBA DRIVE
SWEDESBORO, NJ 08085

COPY MAILED

MAY 09 2005

OFFICE OF PETITIONS

LETTER

In re Application of: :
Charles Frederick Fey III and :
William H. Meise :
Application No. 10/928,986 :
Filed: April 6, 2004 :
Attorney Docket No.: 2002B098/2 :

Dear Mr. Fey:

You are named as a joint inventor in the above-identified United States patent application filed under the provisions of 35 U.S.C. 116 (United States Code) and 37 CFR 1.47(a), Rules of Practice in Patent Cases. Should a patent be granted on the application you will be designated therein as a joint inventor.

As a named inventor you are entitled to inspect any paper in the file wrapper of the application, order copies of all or any part thereof (at a prepaid cost per 37 CFR 1.19) or make your position of record in the application. Alternatively, you may arrange to do any of the preceding through a registered patent attorney or agent presenting written authorization from you. Joining in the application would entail the filing of an appropriate oath or declaration by you pursuant to 37 CFR 1.63.

Telephone inquiries regarding this communication should be directed to the undersigned at (571) 272-3232. Requests for information regarding your application should be directed to the File Information Unit at (703) 308-2733. Information regarding how to pay for and order a copy of the application, or a specific paper in the application, should be directed to Certification Division at (703) 308-9726 or 1-800-972-6382 (outside the Washington D.C. area).

Derek L. Woods
Petitions Attorney
Office of Petitions

cc: DUANE MORRIS LLP
PO BOX 5203
PRINCETON, NJ 08543-5203

UNITED STATES PATENT AND TRADEMARK OFFICE

Commissioner for Patents
United States Patent and Trademark Office
P.O. Box 1450
Alexandria, VA 22313-1450
www.uspto.gov

JENKINS, WILSON, TAYLOR & HUNT, P. A.
Suite 1200 UNIVERSITY TOWER
3100 TOWER BLVD.,
DURHAM NC 27707

MAILED

JUL 15 2010

OFFICE OF PETITIONS

In re Patent No. 7,732,667	:	
Issue Date: June 8, 2010	:	
Application No. 10/928,992	:	DECISION ON PETITION
Filed: August 27, 2004	:	
Attorney Docket No. 1392/8/2	:	

This is a decision on the Request For Certificate Of Correction Of Patent Pursuant To 37 C.F.R. §1.323 And §3.81, filed June 3, 2010, which is being treated as a Petition Under 37 CFR 3.81(b) to accept the omission of the second and third assignees' names. A completed Certificate of Correction Form (PTO/SB/44) was submitted with Petition.

The petition under 37 CFR 3.81 is **GRANTED**.

Petitioner requests that the present Petition was submitted to correct the omission of the second and third assignees' names on the previously submitted PTOL-85B. Accordingly, petitioner requests that a Certificate of Correction (PTO/SB/44) be issued to add the omitted second and third assignees' names to the Title Page of the Letters Patent.

37 CFR 3.81(b), effective June 25, 2004, reads:

> *After payment of the issue fee:* Any request for issuance of an application in the name of the assignee submitted after the date of payment of the issue fee, and any request for a patent to be corrected to state the name of the assignee, must state that the assignment was submitted for recordation as set forth in § 3.11 before issuance of the patent, and must include a request for a certificate of correction under § 1.323 of this chapter (accompanied by the fee set forth in § 1.20(a) and the processing fee set forth in § 1.17(i) of this chapter.

The requisite $100.00 fee (Fee Code 1811) as set forth under 37 CFR 1.20(a), and the requisite $130.00 processing fee (Fee Code 1464) as set forth under 37 CFR 1.17(i) have been submitted. Further, Office assignment records are consistent with the requested correction. Accordingly, since the Petition complies with the provisions of 37 CFR 3.81(b), it is appropriate for the Office to issue a Certificate of Correction in accordance with the content of the Form PTO/SB/44 submitted with the petition.

Inquiries related this communication should be directed to the undersigned at (571)272-3213.

Any questions concerning the issuance of a Certificate of Correction should be directed to the Certificates of Correction Branch at (571) 272-4200.

This matter is being referred to the Certificates of Correction Branch for processing of a Certificate of Correction in U.S. Patent No. 7,732,667.

Cheryl Gibson-Baylor

Cheryl Gibson-Baylor
Petitions Examiner
Office of Petitions

UNITED STATES PATENT AND TRADEMARK OFFICE

Commissioner for Patents
United States Patent and Trademark Office
P.O. Box 1450
Alexandria, VA 22313-1450
www.uspto.gov

INGRASSIA FISHER & LORENZ
7150 E. CAMELBACK, STE. 325
SCOTTSDALE, AZ 85251

COPY MAILED

JUN 0 2 2006

OFFICE OF PETITIONS

In re Application of	:	
Joseph P. Carroll et al	:	
Application No. 10/929,070	:	DECISION ON PETITION
Filed: August 27, 2004	:	TO WITHDRAW
Attorney Docket No. 024.0069 (03-1568)	:	FROM RECORD
	:	

This is a decision on the Request to Withdraw as attorney or agent of record under 37 C.F.R. § 1.36(b), filed January 16, 2006.

The request is **NOT APPROVED** as moot.

A review of the file record indicates that the power of attorney to Mark M. Takahashi, along with all of the other attorneys associated with Customer No. **29906** has been revoked by the assignee of the patent application on April 28, 2006. Accordingly, the request to withdraw under 37 C.F.R. § 1.36(b) is moot.

All future communications from the Office will continue to be directed to the **first** below-listed address until otherwise notified by applicant/assignee.

It is noted that the power of attorney submitted on April 27, 2006 was improperly accepted by the Office on April 28, 2006. In this regard, compliance with 37 CFR 3.73(b) has not been satisfied in that the reel and frame number where the recorded assignment appears in the assignment records of the USPTO has not been provided. Therefore, in order for the power of attorney to be acceptable, compliance with 37 C.F.R. 3.73(b) must be satisfied. A form for complying with the provisions of 37 CFR 3.37(b) may be found on the USPTO.gov website (Form No. PTO/SB/96).

Telephone inquires concerning this decision should be directed to the undersigned at 571-272-3208.

Karen Creasy

Karen Creasy
Petitions Examiner
Office of Petitions

Confereee: dp

cc:

KINNEY & LANGE, P.A.
THE KINNEY & LANGE BUILDING
312 SOUTH THIRD STREET
MINNEAPOLIS, MN 55415-1002

F. TYLER MORRISON
PRATT & WHITNEY
MAIL STOP 132-13
400 MAIN STREET
EAST HARTFORD, CT 06108

UNITED STATES PATENT AND TRADEMARK OFFICE

Commissioner for Patents
United States Patent and Trademark Office
P.O. Box 1450
Alexandria, VA 22313-1450
www.uspto.gov

STERNE, KESSLER, GOLDSTEIN & FOX P.L.L.C.
1100 NEW YORK AVENUE, N.W.
WASHINGTON DC 20005

COPY MAILED
SEP 10 2008

In re Application of	:	
Kevin D. Kissell, et al.	:	
Application No. 10/929,097	:	DECISION DISMISSING PETITION
Filed: August 27, 2004	:	UNDER 37 CFR 1.313(c)(2)
Attorney Docket No. 1778.3350005	:	
(0194.00US)		

This is a decision on the petition under 37 CFR 1.313(c)(2), filed September 8, 2008, to withdraw the above-identified application from issue after payment of the issue fee.

The petition is **DISMISSED AS MOOT**.

Unfortunately, the petition was not referred to the appropriate deciding official for decision until after the issuance of this application into a patent. However, petitioner's attention is directed to 37 CFR 1.313(d), which states:

> A petition under this section will not be effective to withdraw the application from issue unless it is actually received and granted by the appropriate officials **before the date of issue**. (Emphasis added)

In this case, the petition was not received in the Office of Petitions for consideration until September 9, 2008. Therefore, as the case has now issued, the petition to withdraw from issue cannot be granted.

The request for continued examination (RCE) filed concurrently with the petition is improper in view of the issuance of this application into a patent and will not be processed. Accordingly, the $810 filing fee and the $130 petition fee submitted are unnecessary and will be refunded in due course.

The Information Disclosure Statement has been made of record in the file of the above-identified application without further consideration. *See* 37 CFR 1.97(i).

Petitioner is advised, that while petitions to withdraw from issue may be mailed to the Commissioner for Patents, applicants were cautioned to hand carry or fax petitions to withdraw from issue directly to the Office of Petitions. *See* MPEP § 1308.

Telephone inquiries should be directed to Terri Williams at (571) 272-2991.

Terri Williams

Terri Williams
Petitions Examiner
Office of Petitions

IN THE UNITED STATES PATENT AND TRADEMARK OFFICE

In re application of:	Confirmation No.: 3569
KISSELL *et al.*	Art Unit: 2183
Appl. No.: 10/929,097	Examiner: Eric Coleman
Filed: August 27, 2004	Atty. Docket: 1778.3350005 (0194.00US)
For: **Apparatus, Method, and Instruction for Software Management of Multiple Computational Contexts in a Multithreaded Microprocessor**	

Petition to Withdraw from Issue under 37 C.F.R. § 1.313(c)(2) For Consideration of a Request for Continued Examination

Commissioner for Patents
PO Box 1450
Alexandria, VA 22313-1450

Sir:

It is hereby petitioned under 37 C.F.R. § 1.313(c)(2) that the above-captioned application be withdrawn from issue for consideration of the accompanying request for continued examination in compliance with 37 C.F.R. § 1.114. This petition was necessitated because Applicants wish to submit art for consideration by the Examiner.

It is believed that no extensions of time are necessary, other than those that are otherwise provided for herewith. However, if extensions of time under 37 C.F.R. § 1.136 other than those provided herewith are required to prevent abandonment of the above-captioned application, then such extensions of time are hereby petitioned.

Refund Ref:
09/10/2008 0030060935

Credit Card Refund Total: $940.00

Am Exp..: XXXXXXXXXXX1005

Adjustment date: 09/10/2008 LDIEP1
09/09/2008 INTEFSW 00003815 10929097
01 FC:1464 -130.00 OP
02 FC:1801 -810.00 OP

Adjustment date: 09/10/2008 LDIEP1
09/09/2008 INTEFSW 00003815 10929097
01 FC:1464 -130.00 OP
02 FC:1801 -810.00 OP

PTO/SB/30 (01-08)
Approved for use through 05/31/2008. OMB 0651-0031
U.S. Patent and Trademark Office; U.S. DEPARTMENT OF COMMERCE
Under the Paperwork Reduction Act of 1995, no persons are required to respond to a collection of information unless it contains a valid OMB control number.

Request for Continued Examination (RCE) Transmittal

Address to:
Mail Stop RCE
Commissioner for Patents
P.O. Box 1450
Alexandria, VA 22313-1450

Application Number	10/929,097
Filing Date	August 27, 2004
First Named Inventor	Kevin D. KISSELL
Art Unit	2183
Examiner Name	Eric Coleman
Attorney Docket Number	1778.3350005 (0194.00US)

This is a Request for Continued Examination (RCE) under 37 CFR 1.114 of the above-identified application.
Request for Continued Examination (RCE) practice under 37 CFR 1.114 does not apply to any utility or plant application filed prior to June 8, 1995, or to any design application. See Instruction Sheet for RCEs (not to be submitted to the USPTO) on page 2.

1. Submission required under 37 CFR 1.114 Note: If the RCE is proper, any previously filed unentered amendments and amendments enclosed with the RCE will be entered in the order in which they were filed unless applicant instructs otherwise. If applicant does not wish to have any previously filed unentered amendment(s) entered, applicant must request non-entry of such amendment(s).

a. ☐ Previously submitted. If a final Office action is outstanding, any amendments filed after the final Office action may be considered as a submission even if this box is not checked.

i. ☐ Consider the arguments in the Appeal Brief or Reply Brief previously filed on _____

ii. ☐ Other _____

b. ☒ Enclosed

i. ☐ Amendment/Reply

ii. ☐ Affidavit(s)/ Declaration(s)

iii. ☒ Information Disclosure Statement (IDS)

iv. ☐ Other _____

2. Miscellaneous

a. ☐ Suspension of action on the above-identified application is requested under 37 CFR 1.103(c) for a period of _____ months. (Period of suspension shall not exceed 3 months; Fee under 37 CFR 1.17(i) required)

b. ☐ Other _____

3. Fees The RCE fee under 37 CFR 1.17(e) is required by 37 CFR 1.114 when the RCE is filed.

a. ☒ The Director is hereby authorized to charge the following fees, any underpayment of fees, or credit any overpayments, to Deposit Account No. 19-0036. I have enclosed a duplicate copy of this sheet.

i. ☒ RCE fee required under 37 CFR 1.17(e)

ii. ☐ Extension of time fee (37 CFR 1.136 and 1.17)

iii. ☐ Other _____

b. ☐ Check in the amount of $ _____ enclosed

c. ☒ Payment by credit card (Form PTO-2038 enclosed)

WARNING: Information on this form may become public. Credit card information should not be included on this form. Provide credit card information and authorization on PTO-2038.

SIGNATURE OF APPLICANT, ATTORNEY, OR AGENT REQUIRED

Signature	David C. Isaacson	Date	September 8, 2008
Name (Print/Type)	David C. Isaacson	Registration No.	38,500

CERTIFICATE OF MAILING OR TRANSMISSION

I hereby certify that this correspondence is being deposited with the United States Postal Service with sufficient postage as first class mail in an envelope addressed to: Mail Stop RCE, Commissioner for Patents, P. O. Box 1450, Alexandria, VA 22313-1450 or facsimile transmitted to the U.S. Patent and Trademark Office on the date shown below.

Signature			
Name (Print/Type)		Date	

This collection of information is required by 37 CFR 1.114. The information is required to obtain or retain a benefit by the public which is to file (and by the USPTO to process) an application. Confidentiality is governed by 35 U.S.C. 122 and 37 CFR 1.11 and 1.14. This collection is estimated to take 12 minutes to complete, including gathering, preparing, and submitting the completed application form to the USPTO. Time will vary depending upon the individual case. Any comments on the amount of time you require to complete this form and/or suggestions for reducing this burden, should be sent to the Chief Information Officer, U.S. Patent and Trademark Office, U.S. Department of Commerce, P.O. Box 1450, Alexandria, VA 22313-1450. DO NOT SEND FEES OR COMPLETED FORMS TO THIS ADDRESS. **SEND TO: Mail Stop RCE, Commissioner for Patents, P.O. Box 1450, Alexandria, VA 22313-1450.**
If you need assistance in completing the form, call 1-800-PTO-9199 and select option 2.

UNITED STATES PATENT AND TRADEMARK OFFICE

Commissioner for Patents
United States Patent and Trademark Office
P.O. Box 1450
Alexandria, VA 22313-1450
www.uspto.gov

COPY MAILED

AUG 0 2 2007

OFFICE OF PETITIONS

HOGAN & HARTSON L.L.P.
1999 AVENUE OF THE STARS
SUITE 1400
LOS ANGELES CA 90067

In re Application of	:	
Kuniaki Tanaka et al	:	
Application No. 10/929,103	:	ON PETITION
Filed: August 27, 2004	:	
Attorney Docket No. 88518.0022	:	

This is a decision on the petition, filed July 31, 2007, under 37 CFR 1.313(c)(2) to withdraw the above-identified application from issue after payment of the issue fee.

The petition is **GRANTED.**

The above-identified application is withdrawn from issue for consideration of a submission under 37 CFR 1.114 (request for continued examination). See 37 CFR 1.313(c)(2).

Petitioner is advised that the issue fee paid on July 10, 2007 in the above-identified application cannot be refunded. If, however, the above-identified application is again allowed, petitioner may request that it be applied towards the issue fee required by the new Notice of Allowance.[1]

Telephone inquiries should be directed to the undersigned at (571) 272-3208.

The examiner of Technology Center AU 2852 will consider the request for continued examination under 37 CFR 1.114.

Karen Creasy

Karen Creasy
Petitions Examiner
Office of Petitions

---

[1] The request to apply the issue fee to the new Notice may be satisfied by completing and returning the new Issue Fee Transmittal Form PTOL-85(b), which includes the following language thereon: "Commissioner for Patents is requested to apply the Issue Fee and Publication Fee (if any) or re-apply any previously paid issue fee to the application identified above." Petitioner is advised that, whether a fee is indicated as being due or not, the Issue Fee Transmittal Form **must** be completed and timely submitted to avoid abandonment. Note the language in bold text on the first page of the Notice of Allowance and Fee(s) Due (PTOL-85).

UNITED STATES PATENT AND TRADEMARK OFFICE

Commissioner for Patents
United States Patent and Trademark Office
P.O. Box 1450
Alexandria, VA 22313-1450
www.uspto.gov

COPY MAILED

AUG 06 2007

OFFICE OF PETITIONS

APPLIED MATERIALS INC
PATENT COUNSEL M/S 2061
LEGAL AFFAIRS DEPT
PO BOX 450-A
SANTA CLARA CA 95052

In re Application of	:	
Buchberger, et al.	:	
Application No. 10/929,104	:	ON PETITION
Filed: August 26, 2004	:	
Attorney Docket No. 9452/ETCH	:	

This is a decision on the petition under 37 CFR 1.137(b), filed July 16, 2007, to revive the above-identified application.

The petition under 37 CFR 1.137(b) is **GRANTED**.

The above-identified application became abandoned for failure to timely file a response to the Notice of Non-Compliant Amendment mailed December 8, 2006. This Office action set an extendable period for reply of one month. No extensions of time were obtained. Accordingly, no reply having been received, the application became abandoned on January 9, 2007. A Notice of Abandonment was mailed on June 27, 2007.

With the instant petition, applicant paid the petition fee, made the proper statement of unintentional delay, and submitted the required reply in the form of an Amendment.

The matter is being forwarded to Group Art Unit 1765 for consideration of the Amendment filed July 16, 2007.

Telephone inquiries concerning this decision should be directed to the undersigned at (571)272-3207.

Cliff Congo
Petitions Attorney
Office of Petitions

UNITED STATES PATENT AND TRADEMARK OFFICE

UNITED STATES DEPARTMENT OF COMMERCE
United States Patent and Trademark Office
Address: COMMISSIONER FOR PATENTS
P.O. Box 1450
Alexandria, Virginia 22313-1450
www.uspto.gov

QUALCOMM INCORPORATED
5775 MOREHOUSE DR.
SAN DIEGO, CA 92121

Mail Date: 04/20/2010

Applicant	: Alkinoos H. Vayanos	: DECISION ON REQUEST FOR
Patent Number	: 7599336	: RECALCULATION of PATENT
Issue Date	: 10/06/2009	: TERM ADJUSTMENT IN VIEW
Appliction No	: 10/929,120	: OF WYETH AND NOTICE OF INTENT TO
Filed	: 08/27/2004	: ISSUE CERTIFICATE OF CORRECTION
		:

The Request for Recalculation is **GRANTED** to the extent indicated.

The patent term adjustment has been determined to be **1012** days. The USPTO will *sua sponte* issue a certificate of correction reflecting the amount of PTA days determined by the recalculation.

Prior to the issuance of the certificate of correction, the USPTO will afford patentee an opportunity to be heard and request reconsideration. Accordingly, patentee has **one month or thirty (30) days**, whichever is longer, to file a request for reconsideration of this patent term adjustment calculation. See 35 U.S.C. 154(b)(3)(B)(ii) and 37 CFR 1.322(a)(4). No extensions of time will be granted under 37 CFR 1.136.

Patentee should use document code PET.OP if electronically filing a request for reconsideration of this patent term adjustment calculation. The patentee must also include the information required by 37 CFR 1.705(b)(2) and the fee required by 37 CFR 1.18(e). If patentee does not file a timely request for reconsideration of this patent term adjustment calculation including the information required by 37 CFR 1.705(b)(2) and the fee required by 37 CFR 1.18(e), the USPTO will issue a certificate of correction reflecting the PTA determination noted above.

Patentee should be aware that in order to preserve the right to review in the United States District Court for the District of Columbia of the USPTO patent term adjustment determination, patentee must ensure that he or she also take the steps required under 35 U.S.C. 154(b)(4)(A) in a timely manner. Nothing in the request for recalculation should be construed as providing an alternative time frame for commencing a civil action under 35 U.S.C. 154(b)(4)(A).

Any questions concerning this decision should be directed to the Office of Patent Legal Administration at 571-272-7702.

UNITED STATES PATENT AND TRADEMARK OFFICE

UNITED STATES DEPARTMENT OF COMMERCE
United States Patent and Trademark Office
Address: COMMISSIONER FOR PATENTS
P.O. Box 1450
Alexandria, Virginia 22313-1450
www.uspto.gov

INTEL/BSTZ
BLAKELY SOKOLOFF TAYLOR & ZAFMAN LLP
1279 OAKMEAD PARKWAY
SUNNYVALE, CA 94085-4040

Mail Date: 04/21/2010

Applicant	: John Ronciak	: DECISION ON REQUEST FOR
Patent Number	: 7602798	: RECALCULATION of PATENT
Issue Date	: 10/13/2009	: TERM ADJUSTMENT IN VIEW
Appliction No	: 10/929,124	: OF WYETH AND NOTICE OF INTENT TO
Filed	: 08/27/2004	: ISSUE CERTIFICATE OF CORRECTION
		:

The Request for Recalculation is **GRANTED** to the extent indicated.

The patent term adjustment has been determined to be **1067** days. The USPTO will *sua sponte* issue a certificate of correction reflecting the amount of PTA days determined by the recalculation.

Prior to the issuance of the certificate of correction, the USPTO will afford patentee an opportunity to be heard and request reconsideration. Accordingly, patentee has **one month or thirty (30) days**, whichever is longer, to file a request for reconsideration of this patent term adjustment calculation. See 35 U.S.C. 154(b)(3)(B)(ii) and 37 CFR 1.322(a)(4). No extensions of time will be granted under 37 CFR 1.136.

Patentee should use document code PET.OP if electronically filing a request for reconsideration of this patent term adjustment calculation. The patentee must also include the information required by 37 CFR 1.705(b)(2) and the fee required by 37 CFR 1.18(e). If patentee does not file a timely request for reconsideration of this patent term adjustment calculation including the information required by 37 CFR 1.705(b)(2) and the fee required by 37 CFR 1.18(e), the USPTO will issue a certificate of correction reflecting the PTA determination noted above.

Patentee should be aware that in order to preserve the right to review in the United States District Court for the District of Columbia of the USPTO patent term adjustment determination, patentee must ensure that he or she also take the steps required under 35 U.S.C. 154(b)(4)(A) in a timely manner. Nothing in the request for recalculation should be construed as providing an alternative time frame for commencing a civil action under 35 U.S.C. 154(b)(4)(A).

Any questions concerning this decision should be directed to the Office of Patent Legal Administration at 571-272-7702.

UNITED STATES PATENT & TRADEMARK OFFICE
UNDER SECRETARY OF COMMERCE FOR INTELLECTUAL PROPERTY AND DIRECTOR OF THE UNITED STATES PATENT AND TRADEMARK OFFICE
Washington, D.C. 20231

MAY 1 1 2009

Roetzel & Andress
1375 East Ninth Street
One Cleveland Center, 9th Floor
Cleveland, OH 44114

In re Patent No.	7,178,187	:	
Issue Date:	February 20, 2007	:	
Serial No.	10/929,137	:	ON PETITION
Filed:	August 28, 2004	:	TO CORRECT
For:	ASYMMETRIC SPRING COMPONENTS AND INNERSPRINGS FOR ONE-SIDED MATTRESSES	:	INVENTORSHIP UNDER 37 CFR 1.324

This is a decision on the request filed May 14, 2007 to correct inventorship under 37 CFR 1.48. In view of the fact that the patent has already issued, the request under 37 CFR 1.48 has been treated as a petition to correct inventorship under 37 CFR 1.324.

The petition is **DISMISSED.**

A petition to correct inventorship as provided by 37 CFR 1.324(b) requires (1) a statement from each person who is being added as an inventor and from each person who is being deleted as an inventor that the inventorship error occurred without any deceptive intention on their part, (2) a statement from the current named inventor(s) who have not submitted a statement as per (b)(1) either agreeing to the change of inventorship or stating that they have no disagreement in regard to the requested change, (3) a statement from all assignees of the parties submitting a statement under (b)(1) and (b)(2) agreeing to the change of inventorship in the patent, which statement must comply with the requirements of 37 CFR 3.73(b); and (4) the fee set forth in 37 CFR 1.20(b) (See MPEP 1481).

This petition lacks item(s) (2), (3) and (4), as stated above.

Peter M. Cuomo
Supervisory Patent Examiner
Art Unit 3673

UNITED STATES PATENT AND TRADEMARK OFFICE

UNITED STATES DEPARTMENT OF COMMERCE
United States Patent and Trademark Office
Address: COMMISSIONER FOR PATENTS
P.O. Box 1450
Alexandria, Virginia 22313-1450
www.uspto.gov

WOLF GREENFIELD & SACKS, P.C.
600 ATLANTIC AVENUE
BOSTON, MA 02210-2206

Mail Date: 04/21/2010

Applicant	: Pierre-Yvan Liardet	: DECISION ON REQUEST FOR
Patent Number	: 7590673	: RECALCULATION of PATENT
Issue Date	: 09/15/2009	: TERM ADJUSTMENT IN VIEW
Appliction No	: 10/929,140	: OF WYETH AND NOTICE OF INTENT TO
Filed	: 08/27/2004	: ISSUE CERTIFICATE OF CORRECTION
		:

The Request for Recalculation is **GRANTED** to the extent indicated.

The patent term adjustment has been determined to be **983** days. The USPTO will *sua sponte* issue a certificate of correction reflecting the amount of PTA days determined by the recalculation.

Prior to the issuance of the certificate of correction, the USPTO will afford patentee an opportunity to be heard and request reconsideration. Accordingly, patentee has **one month or thirty (30) days**, whichever is longer, to file a request for reconsideration of this patent term adjustment calculation. See 35 U.S.C. 154(b)(3)(B)(ii) and 37 CFR 1.322(a)(4). No extensions of time will be granted under 37 CFR 1.136.

Patentee should use document code PET.OP if electronically filing a request for reconsideration of this patent term adjustment calculation. The patentee must also include the information required by 37 CFR 1.705(b)(2) and the fee required by 37 CFR 1.18(e). If patentee does not file a timely request for reconsideration of this patent term adjustment calculation including the information required by 37 CFR 1.705(b)(2) and the fee required by 37 CFR 1.18(e), the USPTO will issue a certificate of correction reflecting the PTA determination noted above.

Patentee should be aware that in order to preserve the right to review in the United States District Court for the District of Columbia of the USPTO patent term adjustment determination, patentee must ensure that he or she also take the steps required under 35 U.S.C. 154(b)(4)(A) in a timely manner. Nothing in the request for recalculation should be construed as providing an alternative time frame for commencing a civil action under 35 U.S.C. 154(b)(4)(A).

Any questions concerning this decision should be directed to the Office of Patent Legal Administration at 571-272-7702.

UNITED STATES PATENT AND TRADEMARK OFFICE

COMMISSIONER FOR PATENTS
UNITED STATES PATENT AND TRADEMARK OFFICE
P.O. BOX 1450
ALEXANDRIA, VA 22313-1450
www.uspto.gov

Paper No.

HOWSON & HOWSON LLP
501 OFFICE CENTER DRIVE
SUITE 210
FORT WASHINGTON PA 19034

COPY MAILED
MAR 02 2010

In re Patent No. 7,513,842	:	DECISION ON REQUEST
Osamu Yoshida	:	FOR
Issue Date: April 7, 2009	:	RECONSIDERATION OF
Application No. 10/929,141	:	PATENT TERM ADJUSTMENT
Filed: August 27, 2004	:	and
Atty Docket No. TWA110USA	:	NOTICE OF INTENT TO ISSUE
	:	CERTIFICATE OF CORRECTION

This is a decision on the petition filed on April 7, 2009, which is being treated as a petition under 37 CFR 1.705(d) requesting that the patent term adjustment indicated on the above-identified patent be corrected to indicate that the term of the above-identified patent is extended or adjusted by eight hundred twenty-four (824) days.

The petition to correct the patent term adjustment indicated on the above-identified patent to indicate that the term of the above-identified patent is extended or adjusted by eight hundred twenty-four (824) days is **GRANTED**.

The Office acknowledges submission of the $200.00 fee set forth in 37 CFR 1.18(e). No additional fees are required.

The application is being forwarded to the Certificates of Branch for issuance of a certificate of correction. The Office will issue a certificate of correction indicating that the term of the above-identified patent is extended or adjusted by **eight hundred twenty-four (824)** days.

Telephone inquiries specific to this matter should be directed to the undersigned at (571) 272-3219.

Nancy Johnson
Senior Petitions Attorney
Office of Petitions

Enclosure: Copy of DRAFT Certificate of Correction

UNITED STATES PATENT AND TRADEMARK OFFICE

CERTIFICATE OF CORRECTION

PATENT : 7,513,842 B2

DATED : **April 7, 2009** **DRAFT**

INVENTOR(S) : Yoshida

It is certified that error appears in the above-identified patent and that said Letters Patent is hereby
corrected as shown below:

On the cover page,

[*] Notice: Subject to any disclaimer, the term of this patent is extended or adjusted under 35 USC 154(b) by 585 days

Delete the phrase "by 585 days" and insert – by 824 days--

UNITED STATES PATENT AND TRADEMARK OFFICE

UNITED STATES DEPARTMENT OF COMMERCE
United States Patent and Trademark Office
Address: COMMISSIONER FOR PATENTS
P.O. Box 1450
Alexandria, Virginia 22313-1450
www.uspto.gov

HOWSON & HOWSON LLP
501 OFFICE CENTER DRIVE
SUITE 210
FORT WASHINGTON, PA 19034

Mail Date: 04/20/2010

Applicant	: Osamu Yoshida	: DECISION ON REQUEST FOR
Patent Number	: 7513842	: RECALCULATION of PATENT
Issue Date	: 04/07/2009	: TERM ADJUSTMENT IN VIEW
Appliction No	: 10/929,141	: OF WYETH
Filed	: 08/27/2004	:
		:

The Patentee's Request for Recalculation is **DISMISSED.**

This Request is deemed ineligible for consideration for one or more of the following reasons:

(A). The patent for which PTA recalculation is requested is either a design or reissue application or is a reexamination proceeding;

(B). The patent for which PTA recalculation is requested resulted from a utility or plant application filed under 35 USC 111(a) before May 29, 2000 and no CPA filed in the application on/after May 29, 2000;

(C). The patent for which PTA recalculation is requested resulted from an international application in which the international filing date was before May 29, 2000 and no CPA filed in the application on/after May 29, 2000;

(D). The patent for which PTA recalculation is requested issued on/after March 2, 2010;

(E). The Request for Recalculation was filed more than 180 days after the grant date of the patent and the request was not filed within two months of a dismissal of a request for reconsideration of the of the patent term under 37 CFR 1.705(d);

(F). The Request for Recalculation is not solely limited to USPTO pre-Wyeth interpretation of 35 U.S.C. 154(b)(2)(A);

or

(G). A civil action was filed pursuant to 35 U.S.C. 154(b)(4)(A)concerning the same patent at issue in this request.

Patentee may file a reply to this decision dismissing the Request for Recalculation. Patentee must file such reply within one month or thirty days, whichever is longer, of the mail date of the decision dismissing the Request for Recalculation. No fee is required if patentee is asserting in the reply that the dismissal for ineligibility is improper.

Patentee should use document code PET.OP if electronically filing a reply to this dismissal. If the USPTO finds that the request was improperly deemed ineligible, the USPTO will mail applicant a recalculation determination.

Patentee should be aware that in order to preserve the right to review in the United States District Court for the District of Columbia of the USPTO patent term adjustment determination, patentee must ensure that he or she also take the steps required under 35 U.S.C. 154(b)(4)(A). Nothing in the request for recalculation should be construed as providing an alternative time frame for commencing a civil action under 35 U.S.C. 154 (b)(4)(A).

Any questions concerning this decision should be directed to the Office of Patent Legal Administration at 571-272-7702.

UNITED STATES PATENT AND TRADEMARK OFFICE

Commissioner for Patents
United States Patent and Trademark Office
P.O. Box 1450
Alexandria, VA 22313-1450
www.uspto.gov

CORNING INCORPORATED
SP-TI-3-1
CORNING NY 14831

COPY MAILED

SEP 30 2008

OFFICE OF PETITIONS

In re Application of	:	
Dana C. BOOKBINDER et al.	:	
Application No. 10/929,142	:	DECISION ON PETITION
Filed: August 30, 2004	:	
Attorney Docket No. **SP03-113**	:	

This is a decision on the petition under 37 CFR 1.137(b), filed May 19, 2008, which, for the reasons stated below, is being treated as a request for a ONE month extension of time.

The request for a One month extension of time is **GRANTED.**

The record shows that a Notice of Non-Responsive Amendment was mailed on February 26, 2008, which set a ONE (1) month shortened statutory period for reply. Accordingly, a reply was due on or before March 26, 2008, or on or before April 26, 2008 with the submission of an extension of time fee pursuant to the provisions of 37 CFR 1.136(a). A request for ONE (1) month extension of time along with a response to the Notice was filed April 28, 2008 with a certificate of mailing dated April 22, 2008. Since petitioner may obtain an extension of time up to an including FIVE (5) months, this case is not in fact abandoned. Accordingly, the filing of a petition to revive is inappropriate until the maximum extendable period for reply has expired.

In view of the above, the $1540 petition fee will be refunded to petitioners Deposit Account in due course.

Inquiries concerning this decision may be directed to Tredelle Jackson at (571) 272-2783.

This application is being referred to Technology Center AU 2874 for further action as the nature of the case may require.

Ramesh Krishnamurthy

Ramesh Krishnamurthy
Petitions Examiner
Office of Petitions

UNITED STATES PATENT AND TRADEMARK OFFICE

Commissioner for Patents
United States Patent and Trademark Office
P.O. Box 1450
Alexandria, VA 22313-1450
www.uspto.gov

THOMAS, KAYDEN, HORSTEMEYER & RISLEY, LLP
600 GALLERIA PARKWAY, S.E.
STE 1500
ATLANTA GA 30339-5994

COPY MAILED

DEC 0 8 2008

OFFICE OF PETITIONS

In re Application of
Huang
Application No. 10/929,152
Filed: August 27, 2004
Attorney Docket No.: 251806-1140

ON PETITION

This is a decision on the petition, filed October 24, 2008, which is being treated as a petition under 37 CFR 1.181 (no fee) requesting withdrawal of the holding of abandonment in the above-identified application.

The petition to withdraw the holding of abandonment is **Dismissed**.

Any request for reconsideration should be filed within **TWO MONTHS** of the mailing date of this decision in order to be considered timely. 37 CFR 1.181(f). This time period may not be extended pursuant to 37 CFR 1.136.

This above-identified application became abandoned for failure to timely file a proper reply within the meaning of 37 CFR 1.113 to the final Office Action of September 26, 2006. The final Office Action set a three (3) month shortened statutory period for reply. Amendments were filed on November 28, 2006 and December 15, 2006.This application was held abandoned on December 27, 2006. A Notice of Abandonment was mailed on November 9, 2007.

A review of the record shows that this petition is untimely. 37 CFR 1.181(f) provides that, inter alia, except as otherwise provided, any petition not filed within 2 months from the action complained of may be dismissed as untimely.

Therefore, any petition (under 37 CFR 1.181) to withdraw the holding of abandonment not filed within 2 months of the mail date of a notice of abandonment (the action complained of) may be dismissed as untimely. 37 CFR 1.181(f). This petition was filed almost one year after the mailing of the Notice of Abandonment.

Petitioner may wish to file a petition under 37 CFR 1.137(b).

There is no indication that the person signing the present petition was ever given a power of attorney or authorization of agent to prosecute the above-identified application. A courtesy copy of this decision is being mailed to the address given on the petition. However, the Office will mail all future correspondence solely to the address of record.

Further correspondence with respect to this matter should be addressed as follows:

By mail: Mail Stop Petition
Commissioner for Patents
P.O. Box 1450
Alexandria, VA 22313-1450

By FAX: (571) 273-8300
Attn: Office of Petitions

By hand: Customer Service Window
Randolph Building
401 Dulany Street
Alexandria, VA 22314

Telephone inquiries concerning this matter should be directed to the undersigned at (571) 272-3215.

Charlema R. Grant

Charlema R. Grant
Petitions Attorney
Office of Petitions

cc: 100 Galleria Pkwy, NW- Suite 1750, Atlanta, GA 30339

UNITED STATES PATENT AND TRADEMARK OFFICE

Commissioner for Patents
United States Patent and Trademark Office
P.O. Box 1450
Alexandria, VA 22313-1450
www.uspto.gov

THOMAS, KAYDEN, HORSTEMEYER & RISLEY, LLP
600 GALLERIA PARKWAY, S.E.
STE 1500
ATLANTA GA 30339-5994

COPY MAILED

MAR 16 2009

OFFICE OF PETITIONS

In re Application of :
Huang. :
Application No. 10/929,152 :
Filed: August 27, 2004 :
Attorney Docket No. 251806-1140 :

ON PETITION

This is a decision on the petition under the unintentional provisions of 37 CFR 1.137(b), filed January 19, 2009, to revive the above-identified application. This decision will also address petitioner's request for a refund filed January 23, 2009.

The petition is **GRANTED** to the extent indicated.

The application became abandoned for failure to timely file a reply within the meaning of 37 CFR 1.113 to the final Office action of September 26, 2006. The proposed reply required for consideration of a petition to revive must be a Notice of Appeal (and appeal fee required by 37 CFR 41.20(b)(2), an amendment that *prima facie* places the application in condition for allowance, a Request for Continued Examination and submission (37 CFR 1.114), or the filing of a continuing application under 37 CFR 1.53(b). See MPEP 711.03(c)(III)(A)(2). No extension of time pursuant to the provisions of 37 CFR 1.136(a) was obtained. Accordingly, the date of abandonment of this application is December 27, 2006.

The petition satisfies the requirements of 37 CFR 1.137(b) in that petitioner has supplied (1) the reply in the form of a Request for Continued Examination (RCE) and fee of $810.00, and the submission required by 37 CFR 1.114; (2) the petition fee of $1620; and (3) a proper statement of unintentional delay

As to petitioner's request of refund for the petition fee and RCE fee, petitioner's request will not be granted.

The phrase "[o]n filing" in 35 U.S.C. 41(a)(7) means that the petition fee is required for the filing (and not merely the grant) of a petition under 37 CFR 1.137. See H.R. Rep. No. 542, 97th Cong., 2d Sess. 6 (1982), reprinted in 1982 U.S.C.C.A.N. 770 ("[t]he fees set forth in this section are due on filing the petition"). Therefore, the Office: (A) will not refund the petition fee required by 37 CFR 1.17(l) or 1.17(m), regardless of whether the petition under 37 CFR 1.137 is

dismissed or denied; and (B) will not reach the merits of any petition under 37 CFR 1.137 lacking the requisite petition fee.

Petitioner's opportunity to raise issues as to the correctness of the holding of abandonment was within two months of the mailing of the Notice of Abandonment. Petitioner failed to do so. Petitioner cannot now attempt to achieve the relief that a timely petition filed under 37 CFR 1.181 *may* have provided by seeking a refund of the petition and RCE fee.

Telephone inquiries concerning this decision should be directed to the undersigned at (571) 272-3215.

This application is being referred to Technology Center AU 2611 for appropriate action by the Examiner in the normal course of business.

Charlema Grant
Petitions Attorney
Office of Petitions

UNITED STATES PATENT AND TRADEMARK OFFICE

Commissioner for Patents
United States Patent and Trademark Office
P.O. Box 1450
Alexandria, VA 22313-1450
www.uspto.gov

PEPPER HAMILTON LLP
50TH FLOOR
ONE MELLON CENTER
500 GRANT STREET
PITTSBURGH PA 15219

MAILED

MAR 30 2009

OFFICE OF PETITIONS

In re Application of	:	
Lynn KIRKPATRICK et al.	:	
Application No. 10/929,156	:	DECISION ON PETITION
Filed: August 30, 2004	:	
Attorney Docket No. **126387.00911**	:	

This is a decision on the petition, filed, August 29, 2008, which is being treated as a request under 37 CFR 3.81(b)[1] to correct the assignee's name on the Fee(s) Transmittal form PTOL-85(b) by way of a certificate of correction in the patent to be issued from the above-identified application.

The request is **GRANTED**.

Petitioner states that the correct assignee's name is Prolx Pharmaceuticals Corp., Tucson, AZ (US); Arizona Board of Regents, acting on behalf of The University of Arizona, Tucson, AZ (US) and that the incorrect assignee's name was included on the Fee(s) Transmittal form PTOL-85(b) at the time of payment of the issue fee. Accordingly, petitioner requests that a certificate of correction be issued to reflect the correct assignee on the front page of the Letters Patent in the patent to be issued from the application.

37 CFR 3.81(b), effective June 25, 2004, reads:

> *After payment of the issue fee:* Any request for issuance of an application in the name of the assignee submitted after the date of payment of the issue fee, and any request for a patent to be corrected to state the name of the assignee, must state that the assignment was submitted for recordation as set forth in § 3.11 before issuance of the patent, and must include a request for a certificate

[1] *See* MPEP 1309, subsection II; and Official Gazette of June 22, 2004.

> of correction under § 1.323 of this chapter (accompanied by the fee set forth in § 1.20(a) and the processing fee set forth in § 1.17(i) of this chapter.

The request was accompanied by a certificate of correction (and fee) as required by 3.81(b). Further, Office assignment records reflect that Prolx Pharmaceuticals Corp., Tucson, AZ (US); Arizona Board of Regents, acting on behalf of The University of Arizona, Tucson, AZ (US) are the assignees of record. Accordingly, as the request complies with the provisions of 37 CFR 3.81(b), it would be appropriate for a certificate of correction to be processed after issuance of this application into a patent.

Inquiries concerning this decision should be directed to the Michelle R. Eason at (571) 272-4231. Any questions concerning the issuance of a certificate of correction should be directed to the Certificates of Correction Branch at (571) 272-4200.

This matter is being referred to the Certificates of Correction Branch for processing of a certificate of correction after issuance of this application into a patent.

Thurman Page
Petitions Examiner
Office of Petitions

UNITED STATES PATENT AND TRADEMARK OFFICE

UNITED STATES DEPARTMENT OF COMMERCE
United States Patent and Trademark Office
Address: COMMISSIONER FOR PATENTS
P.O. Box 1450
Alexandria, Virginia 22313-1450
www.uspto.gov

MERCHANT & GOULD (MICROSOFT)
P.O. BOX 2903
MINNEAPOLIS, MN 55402-0903

Mail Date: 04/21/2010

Applicant	: Scott E. Colville	: DECISION ON REQUEST FOR
Patent Number	: 7594025	: RECALCULATION of PATENT
Issue Date	: 09/22/2009	: TERM ADJUSTMENT IN VIEW
Appliction No	: 10/929,191	: OF WYETH AND NOTICE OF INTENT TO
Filed	: 08/30/2004	: ISSUE CERTIFICATE OF CORRECTION
		:

The Request for Recalculation is **GRANTED** to the extent indicated.

The patent term adjustment has been determined to be **1271** days. The USPTO will *sua sponte* issue a certificate of correction reflecting the amount of PTA days determined by the recalculation.

Prior to the issuance of the certificate of correction, the USPTO will afford patentee an opportunity to be heard and request reconsideration. Accordingly, patentee has **one month or thirty (30) days**, whichever is longer, to file a request for reconsideration of this patent term adjustment calculation. See 35 U.S.C. 154(b)(3)(B)(ii) and 37 CFR 1.322(a)(4). No extensions of time will be granted under 37 CFR 1.136.

Patentee should use document code PET.OP if electronically filing a request for reconsideration of this patent term adjustment calculation. The patentee must also include the information required by 37 CFR 1.705(b)(2) and the fee required by 37 CFR 1.18(e). If patentee does not file a timely request for reconsideration of this patent term adjustment calculation including the information required by 37 CFR 1.705(b)(2) and the fee required by 37 CFR 1.18(e), the USPTO will issue a certificate of correction reflecting the PTA determination noted above.

Patentee should be aware that in order to preserve the right to review in the United States District Court for the District of Columbia of the USPTO patent term adjustment determination, patentee must ensure that he or she also take the steps required under 35 U.S.C. 154(b)(4)(A) in a timely manner. Nothing in the request for recalculation should be construed as providing an alternative time frame for commencing a civil action under 35 U.S.C. 154(b)(4)(A).

Any questions concerning this decision should be directed to the Office of Patent Legal Administration at 571-272-7702.

UNITED STATES PATENT AND TRADEMARK OFFICE

UNITED STATES DEPARTMENT OF COMMERCE
United States Patent and Trademark Office
Address: COMMISSIONER FOR PATENTS
P.O. Box 1450
Alexandria, Virginia 22313-1450
www.uspto.gov

MERCHANT & GOULD (MICROSOFT)
P.O. BOX 2903
MINNEAPOLIS, MN 55402-0903

Mail Date: 05/18/2010

Applicant : Scott E. Colville
Patent Number : 7594025
Issue Date : 09/22/2009
Application No : 10/929,191
Filed : 08/30/2004

: NOTICE CONCERNING IMPROPER
: CALCULATION OF PATENT TERM
: ADJUSTMENT BASED UPON USPTO
: IMPROPERLY MEASURING REDUCTION
: PERIOD UNDER 37 CFR 1.704(c)(10).

The United States Patent and Trademark Office (USPTO) discovered that in processing the recent recalculation decisions mailed in response to patentee's filed Request for Recalculation of Patent Term Adjustment in view of Wyeth, the USPTO improperly measured the reduction period for reductions under 37 CFR 1.704(c)(10). Pursuant to 37 CFR 1.704(c)(10), patentee's reduction begins on the date of filing the amendment under 37 CFR 1.312 ("1.312 amendment") or other related paper and ends on the date that the Office mails a response to the filing of the 1.312 amendment or other paper. It has been discovered that during the recalculation, the calculation failed to the limit the reduction to the mail date of the response to the 1.312 amendment or other paper. Accordingly, patentee's reductions were greater than warranted.

This notice **VACATES** the previous GRANTED request for recalculation and provides patentee with a revised GRANTED recalculation.

The patent term adjustment has been determined to be **1320** days. The USPTO will *sua sponte* issue a certificate of correction reflecting the amount of patent term adjustment (PTA) days determined by the recalculation.

Prior to the issuance of the certificate of correction, the USPTO will afford patentee an opportunity to be heard and request reconsideration. Accordingly, patentee has **one month or thirty (30) days** from the mail date of this notice, whichever is longer, to file a request for reconsideration of this PTA calculation. See 35 U.S.C. § 154(b)(3)(B)(ii) and 37 CFR 1.322(a)(4).

Patentee should use document code PET.OP if electronically filing a request for reconsideration of this PTA calculation. The patentee must also include the information required by 37 CFR 1.705(b)(2), and the fee required by 37 CFR 1.18(e). If patentee does not file a timely request for reconsideration of this PTA calculation, including the information required by 37 CFR 1.705(b)(2) and the fee required by 37 CFR 1.18(e), the USPTO will issue a certificate of correction reflecting the PTA determination noted above.

Patentee should be aware that in order to preserve the right of review of the USPTO's PTA determination in the United States District Court for the District of Columbia, patentee must ensure that the steps required under 35 U.S.C. § 154 (b)(4) are taken in a timely manner. Nothing in the request for recalculation should be construed as providing an alternative time frame for commencing a civil action under 35 U.S.C. § 154(b)(4).

UNITED STATES PATENT AND TRADEMARK OFFICE

COMMISSIONER FOR PATENTS
UNITED STATES PATENT AND TRADEMARK OFFICE
P.O. BOX 1450
ALEXANDRIA, VA 22313-1450
www.uspto.gov

HARNESS, DICKEY & PIERCE, P.L.C.
P.O. BOX 828
BLOOMFIELD HILLS, MI 48303

COPY MAILED
APR 24 2006
OFFICE OF PETITIONS

In re Application of	:	
Cooper et al.	:	
Application No. 10/929,195	:	DECISION
Filed: August 30, 2004	:	ON PETITION
Atty Docket No.:	:	
0275U-877CPA	:	

This is a decision on the Petition to Withdraw Holding of Abandonment Under 37 CFR 1.181(a), filed March 28, 2006.

The petition is **granted.**

Background

The above-identified application became abandoned for failure to timely and properly reply to the non-final Office action, mailed July 1, 2005. The Office action set a three (3) month period for reply. No reply having been received, this application became abandoned on October 2, 2005.

The instant petition

Applicant responds with the instant petition wherein Applicant avers that a timely reply to the Office action was filed on August 31, 2005, and was received by this Office as evidenced by Applicant's return-receipt postcard. Applicant provides that, due to a scrivener's error, the application number was entered on the Transmittal Letter as application serial number 10/929,185, instead of 10/929,195.

The application papers filed August 31, 2005 have been located in application serial number 10/929,185, and have been removed and placed in application serial number 10/929,195. It is apparent that the Response to Office action was filed in this Office on August 31, 2005, and due to errors on the part of applicant and this Office, was inadvertently misplaced. Accord MPEP 502.

In view of the foregoing, the holding of abandonment is hereby withdrawn.

No fee has been charged and none is due.

The application will be referred to Technology Center 3723 for continued processing in due course.

Telephone inquiries concerning this matter should be directed to the undersigned at (571) 272-3232.

Derek L. Woods
Attorney
Office of Petitions

UNITED STATES PATENT AND TRADEMARK OFFICE

Commissioner for Patents
United States Patent and Trademark Office
P.O. Box 1450
Alexandria, VA 22313-1450
www.uspto.gov

Greatbatch Ltd.
10,000 Wehrle Drive
Clarence NY 14031

COPY MAILED
AUG 21 2008

In re Application of	:	
Xu et al.	:	
Application No. 10/929,235	:	ON PETITION
Filed: 08/30/2004	:	
Attorney Docket No. 37505.0403	:	

This is a decision on the petition under 37 CFR 1.183, filed June 17, 2008, to waive the requirement that all of the named inventors execute the declaration under 37 CFR 1.131.

The petition is **granted** to the extent indicated.

Applicants assert that, while all of the named inventors contributed to the conception of the claimed invention which is under rejection, only inventor Carl Schlaikjer has agreed to execute the declaration under 37 CFR 1.131 in support of establishing conception of the claimed invention prior to December 19, 2002.

As noted in MPEP 715.04, an adequate showing may lead to acceptance of a declaration under 37 CFR 1.131 executed by less than all the named inventors of the claimed subject matter in question. In the present petition, applicants have set forth the steps taken to obtain joint inventor Xu's signature on the declaration under 37 CFR 1.131. Applicants have shown that a *bona fide* effort was made to present the declaration under 37 CFR 1.131 and supporting documentation to inventor Xu for her signature, however, she did not respond to their request.

Under the facts presented, it is agreed that justice requires waiver of the requirement that all of the named inventors execute the declaration under 37 CFR 1.131. However, this favorable decision does not relieve applicants from their burden to establish that the invention was completed before the date of the reference and that the claimed invention was the product of the joint inventors. See In re Carlson, 79 F.2d. 900, 27 USPQ 400 (CCPA 1935).

This application is being referred to Technology Center AU 1795 for further examination on the merits.

Applicants paid a $130.00 fee for filing the present petition. The current petition fee is $400.00. Accordingly, the Office will charge the deposit account for the balance due of $270.00.

Inquiries regarding this communication may be directed to the undersigned at (571) 272-3211. Inquiries concerning the examination or status of the application should be directed to the Technology Center.

Christina T. Donnell

Christina Tartera Donnell
Senior Petitions Attorney
Office of Petitions

UNITED STATES PATENT AND TRADEMARK OFFICE

UNITED STATES DEPARTMENT OF COMMERCE
United States Patent and Trademark Office
Address: COMMISSIONER FOR PATENTS
P.O. Box 1450
Alexandria, Virginia 22313-1450
www.uspto.gov

VOLPE AND KOENIG, P.C.
DEPT. ICC
UNITED PLAZA, SUITE 1600
30 SOUTH 17TH STREET
PHILADELPHIA, PA 19103

Mail Date: 04/26/2010

Applicant	: Steven Goldberg	: DECISION ON REQUEST FOR
Patent Number	: 7596387	: RECALCULATION of PATENT
Issue Date	: 09/29/2009	: TERM ADJUSTMENT IN VIEW
Application No	: 10/929,240	: OF WYETH AND NOTICE OF INTENT TO
Filed	: 08/30/2004	: ISSUE CERTIFICATE OF CORRECTION
		:

The Request for Recalculation is **GRANTED** to the extent indicated.

The patent term adjustment has been determined to be **18** days. The USPTO will *sua sponte* issue a certificate of correction reflecting the amount of PTA days determined by the recalculation.

Prior to the issuance of the certificate of correction, the USPTO will afford patentee an opportunity to be heard and request reconsideration. Accordingly, patentee has **one month or thirty (30) days**, whichever is longer, to file a request for reconsideration of this patent term adjustment calculation. See 35 U.S.C. 154(b)(3)(B)(ii) and 37 CFR 1.322(a)(4). No extensions of time will be granted under 37 CFR 1.136.

Patentee should use document code PET.OP if electronically filing a request for reconsideration of this patent term adjustment calculation. The patentee must also include the information required by 37 CFR 1.705(b)(2) and the fee required by 37 CFR 1.18(e). If patentee does not file a timely request for reconsideration of this patent term adjustment calculation including the information required by 37 CFR 1.705(b)(2) and the fee required by 37 CFR 1.18(e), the USPTO will issue a certificate of correction reflecting the PTA determination noted above.

Patentee should be aware that in order to preserve the right to review in the United States District Court for the District of Columbia of the USPTO patent term adjustment determination, patentee must ensure that he or she also take the steps required under 35 U.S.C. 154(b)(4)(A) in a timely manner. Nothing in the request for recalculation should be construed as providing an alternative time frame for commencing a civil action under 35 U.S.C. 154(b)(4)(A).

Any questions concerning this decision should be directed to the Office of Patent Legal Administration at 571-272-7702.

UNITED STATES PATENT AND TRADEMARK OFFICE

Commissioner for Patents
United States Patent and Trademark Office
P.O. Box 1450
Alexandria, VA 22313-1450
www.uspto.gov

MAILED FROM
DIRECTORS OFFICE

AUG 2 4 2006

TECHNOLOGY CENTER 2800

Attorney Name: Daniel Mertes
Firm: SCHWEGMAN, LUNDBERG, WOESSNER & KLUTH
Address: 121 S. 8TH STREBT
SUITE 1600
MINNEAPOLIS, MN 55402

In re Application of: Hall et al.	:	
Application No. 10/929283	:	NOTICE OF WITHDRAWAL
Filed: August, 30, 2004	:	FROM ISSUE
Attorney Docket No. 303.806US2	:	UNDER 37 CFR ∋ 1.313
	:	

The purpose of this communication is to inform you that the above identified application is being withdrawn from issue pursuant to 37 CFR 1.313.

The above-identified application is hereby withdrawn from issue. The Notice of Allowance and Issue Fee Due and the Notice of Allowability mailed April 10, 2006, are hereby vacated.

The application is being withdrawn from issue to permit reopening of prosecution. The reasons therefor will be communicated to you by the examiner.

The issue fee is refundable upon request. However, the applicant may wait until the application is either again found allowable or held abandoned. If the application is allowed, upon receipt of a new Notice of Allowance and Issue Fee Due, applicant may request that the previously submitted issue fee be applied toward payment of the issue fee in the amount identified on the new Notice of Allowance and Issue Fee Due. If the application is abandoned, the applicant may request either a refund or a credit to a Deposit Account.

Telephone inquires should be directed to Zandra V. Smith, Supervisory Patent Examiner, at (571) 272-2429.

The above-identified application is being forwarded to the examiner for prompt appropriate action.

Sharon Gibson, Director
Technology Center 2800
Semiconductors, Electrical and Optical
Systems and Components

UNITED STATES PATENT AND TRADEMARK OFFICE

Commissioner for Patents
United States Patent and Trademark Office
P.O. Box 1450
Alexandria, VA 22313-1450
www.uspto.gov

NOV - 8 2004

MAILED

NOV - 8 2004

OFFICE OF THE DIRECTOR
TC 3600

CRAIG W. RODDY
HALLIBURTON ENERGY SERVICES
P.O. Box 1431
Duncan, OK 73536-0440

In re application of	:	**DECISION ON PETITION**
William J. Caveny et al	:	**TO MAKE SPECIAL**
Application No. 10/929,285	:	**(APPLICANT'S AGE)**
Filed: August 30, 2004	:	
For: DETERMINING, PRICING, AND/OR PROVIDING WELL SERVICING TREATMENTS AND DATA PROCESSING SYSTEMS THEREFOR		

This is a decision on the petition submitted on August 30, 2004, under 37 CFR 1.102 (c) to make the above-identified application special under the accelerated examination procedure set forth in MPEP 708.02, Section IV: Applicant's Age.

The petition is **GRANTED**.

An application may be accorded special status upon the filing of a petition providing evidence showing that the applicant is at least 65 years old. Such a showing may be provided by evidence such as a birth certificate or a statement from the applicant.

The evidence submitted with the petition is a declaration signed by Mr. Koch indicating that he is at least 65 years of age.

The examiner is directed (1) to make an interference search for possible interfering applications, (2) to promptly examine this application out of turn, and (3) if any interfering application is discovered, to examine such application simultaneously and state in the first official letter of such application that it is being taken out of turn because of a possible interference.

Petitioner is advised that this application will continue to be special, throughout its entire prosecution and pendency, including interference or appeal, if any, only if petitioner makes a prompt ***bona fide*** effort, in response to each Office action, to place the application in condition for allowance, even if it is necessary to conduct an interview with the examiner to accomplish this purpose.

SUMMARY: Petition to Make Special **Granted.**

Steven N. Meyers
Special Programs Examiner
Patent Technology Center 3600
(703) 308-3868

SNM/pav: 11/01/04

UNITED STATES PATENT AND TRADEMARK OFFICE

UNITED STATES DEPARTMENT OF COMMERCE
United States Patent and Trademark Office
Address: COMMISSIONER FOR PATENTS
P.O. Box 1450
Alexandria, Virginia 22313-1450
www.uspto.gov

CRAIG W. RODDY
HALLIBURTON ENERGY SERVICES
P.O. BOX 1431
DUNCAN, OK 73536-0440

Mail Date: 04/20/2010

Applicant	: William J. Caveny	: DECISION ON REQUEST FOR
Patent Number	: 7636671	: RECALCULATION of PATENT
Issue Date	: 12/22/2009	: TERM ADJUSTMENT IN VIEW
Appliction No	: 10/929,285	: OF WYETH AND NOTICE OF INTENT TO
Filed	: 08/30/2004	: ISSUE CERTIFICATE OF CORRECTION
		:

The Request for Recalculation is **GRANTED** to the extent indicated.

The patent term adjustment has been determined to be **0** days. The USPTO will *sua sponte* issue a certificate of correction reflecting the amount of PTA days determined by the recalculation.

Prior to the issuance of the certificate of correction, the USPTO will afford patentee an opportunity to be heard and request reconsideration. Accordingly, patentee has **one month or thirty (30) days**, whichever is longer, to file a request for reconsideration of this patent term adjustment calculation. See 35 U.S.C. 154(b)(3)(B)(ii) and 37 CFR 1.322(a)(4). No extensions of time will be granted under 37 CFR 1.136.

Patentee should use document code PET.OP if electronically filing a request for reconsideration of this patent term adjustment calculation. The patentee must also include the information required by 37 CFR 1.705(b)(2) and the fee required by 37 CFR 1.18(e). If patentee does not file a timely request for reconsideration of this patent term adjustment calculation including the information required by 37 CFR 1.705(b)(2) and the fee required by 37 CFR 1.18(e), the USPTO will issue a certificate of correction reflecting the PTA determination noted above.

Patentee should be aware that in order to preserve the right to review in the United States District Court for the District of Columbia of the USPTO patent term adjustment determination, patentee must ensure that he or she also take the steps required under 35 U.S.C. 154(b)(4)(A) in a timely manner. Nothing in the request for recalculation should be construed as providing an alternative time frame for commencing a civil action under 35 U.S.C. 154(b)(4)(A).

Any questions concerning this decision should be directed to the Office of Patent Legal Administration at 571-272-7702.

UNITED STATES PATENT AND TRADEMARK OFFICE

UNITED STATES DEPARTMENT OF COMMERCE
United States Patent and Trademark Office
Address: COMMISSIONER FOR PATENTS
P.O. Box 1450
Alexandria, Virginia 22313-1450
www.uspto.gov

HISCOCK & BARCLAY, LLP
2000 HSBC PLAZA
100 Chestnut Street
ROCHESTER, NY 14604-2404

Mail Date: 04/21/2010

Applicant	: Antoun Ateya	: DECISION ON REQUEST FOR
Patent Number	: 7570786	: RECALCULATION of PATENT
Issue Date	: 08/04/2009	: TERM ADJUSTMENT IN VIEW
Appliction No	: 10/929,293	: OF WYETH AND NOTICE OF INTENT TO
Filed	: 08/30/2004	: ISSUE CERTIFICATE OF CORRECTION
		:

The Request for Recalculation is **GRANTED** to the extent indicated.

The patent term adjustment has been determined to be **1374** days. The USPTO will *sua sponte* issue a certificate of correction reflecting the amount of PTA days determined by the recalculation.

Prior to the issuance of the certificate of correction, the USPTO will afford patentee an opportunity to be heard and request reconsideration. Accordingly, patentee has **one month or thirty (30) days**, whichever is longer, to file a request for reconsideration of this patent term adjustment calculation. See 35 U.S.C. 154(b)(3)(B)(ii) and 37 CFR 1.322(a)(4). No extensions of time will be granted under 37 CFR 1.136.

Patentee should use document code PET.OP if electronically filing a request for reconsideration of this patent term adjustment calculation. The patentee must also include the information required by 37 CFR 1.705(b)(2) and the fee required by 37 CFR 1.18(e). If patentee does not file a timely request for reconsideration of this patent term adjustment calculation including the information required by 37 CFR 1.705(b)(2) and the fee required by 37 CFR 1.18(e), the USPTO will issue a certificate of correction reflecting the PTA determination noted above.

Patentee should be aware that in order to preserve the right to review in the United States District Court for the District of Columbia of the USPTO patent term adjustment determination, patentee must ensure that he or she also take the steps required under 35 U.S.C. 154(b)(4)(A) in a timely manner. Nothing in the request for recalculation should be construed as providing an alternative time frame for commencing a civil action under 35 U.S.C. 154(b)(4)(A).

Any questions concerning this decision should be directed to the Office of Patent Legal Administration at 571-272-7702.

UNITED STATES PATENT AND TRADEMARK OFFICE

Commissioner for Patents
United States Patent and Trademark Office
P.O. Box 1450
Alexandria, VA 22313-1450
www.uspto.gov

Paper No.

FISH & RICHARDSON P.C.
PO BOX 1022
MINNEAPOLIS MN 55440-1022

COPY MAILED

JAN 0 2 2008

OFFICE OF PETITIONS

In re Patent No. 7,229,651	:	LETTER REGARDING
Lynn Perkes	:	PATENT TERM ADJUSTMENT
Issue Date: June 12, 2007	:	and
Application No. 10/929,332	:	NOTICE OF INTENT TO ISSUE
Filed: August 30, 2004	:	CERTIFICATE OF CORRECTION
Atty Docket No. 09143-005002	:	

This is in response to the "LETTER REGARDING PATENT TERM ADJUSTMENT" filed August 3, 2007, notifying the Office of an error in Patentee's favor in the determination of patent term adjustment under 35 U.S.C. § 154(b).

The request for review of the determination of patent term adjustment (PTA) is **GRANTED**.

The patent term adjustment indicated in the patent is to be corrected by issuance of a certificate of correction showing a revised Patent Term Adjustment of seventy-three **(73)** days.

On June 12, 2007, the application matured into U.S. Patent No. 7,229,651, with a revised patent term adjustment of 82 days. Patentee discloses that the patent term adjustment appears to be longer than appropriate. Patentee points to the filing of a supplemental Information Disclosure Statement on June 4, 2007.

A review of the record reveals that, pursuant to 37 CFR 1.704(c)(10), a period of reduction of 9 days should have been entered in association with the filing of the Information Disclosure Statement (IDS) on June 4, 2007. The IDS was filed after the mailing of the Notice of Allowance on February 1, 2007. Accordingly, the period of reduction is 9 days, beginning on June 4, 2007, the date of filing of the IDS and ending on June 12, 2007, the date of issuance of the patent.

In view thereof, the patent should have issued with a revised patent term adjustment of seventy-three (73) days.

As this letter was submitted to advise the Office of an error in Patentee's favor, the Office will not assess the $200.00 application fee under 37 CFR 1.705(b). The Office thanks Patentee for their good faith and candor in bringing this matter to the attention of the Office.

The application file is being forwarded to the Certificates of Correction Branch for issuance of a certificate of correction in order to rectify this error. The Office will issue a certificate of correction indicating that the term of the above-identified patent is extended or adjusted by **seventy-three (73)** days.

Telephone inquiries specific to this letter should be directed to the undersigned at (571) 272-3219.

Nancy Johnson
Senior Petitions Attorney
Office of Petitions

Enclosure: Copy of DRAFT Certificate of Correction

UNITED STATES PATENT AND TRADEMARK OFFICE

CERTIFICATE OF CORRECTION

PATENT : 7,229,651 B2

DATED : **June 12, 2007**

INVENTOR(S) : Perkes

DRAFT

It is certified that error appears in the above-identified patent and that said Letters Patent is hereby corrected as shown below:

On the cover page,

[*] Notice: Subject to any disclaimer, the term of this patent is extended or adjusted under 35 USC 154(b) by 82 days

Delete the phrase "by 82 days" and insert – by 73 days--

UNITED STATES PATENT AND TRADEMARK OFFICE

Commissioner for Patents
United States Patent and Trademark Office
P.O. Box 1450
Alexandria, VA 22313-1450
www.uspto.gov

MHKKG/SUN
P.O. BOX 398
AUSTIN TX 78767

COPY MAILED
FEB 14 2008
OFFICE OF PETITIONS

In re Application of :
MAHAN et al. :
Application No. 10/929,335 : DECISION ON PETITION
Filed: 08/30/2004 :
Attorney Docket No. 5681-59500 :

This is a decision on the petition under 37 CFR 1.181 (no fee), filed January 29, 2008, requesting withdrawal of the holding of abandonment in the above-identified application.

The petition is GRANTED.

This application was held abandoned for failure to reply to the nonfinal Office action mailed April 18, 2007, which set a three (3) month shortened statutory period for reply. A Notice of Abandonment was mailed on January 10, 2008.

Petitioner asserts that the nonfinal Office action dated April 18, 2007, was not received.

A review of the written record indicates no irregularity in the mailing of the Office action, and, in the absence of any irregularity, there is a strong presumption that the Office action was properly mailed to the practitioner at the address of record. This presumption may be overcome by a showing that the Office action was not in fact received. In this regard, the showing required to establish the failure to receive the Office action must consist of the following:

1. a statement from practitioner stating that the Office action was not received by the practitioner;

2. a statement from the practitioner attesting to the fact that a search of the file jacket and docket records indicates that the Office action was not received; and

3. a copy of the docket record where the nonreceived Office action would have been entered had it been received and docketed must be attached to and referenced in the practitioner's statement.

See MPEP § 711.03(c) under subheading "Petition to Withdraw Holding of Abandonment Based on Failure to Receive Office Action," and "Withdrawing the Holding of Abandonment When Office Actions Are Not Received," 1156 Official Gazette 53 (November 16, 1993).

The petition satisfies the above-stated requirements. Accordingly, the application was not abandoned in fact.

In view of the above, the Notice of Abandonment is hereby vacated and the holding of abandonment withdrawn.

This application is being referred to the Technology Center technical support staff of Art Unit 2628 for re-mailing the nonfinal Office action of April 18, 2007. The period for reply will run from the re-mailing date of the nonfinal Office action.

Telephone inquiries regarding this decision may be directed to the undersigned at (571) 272-3211.

Christina Tartera Donnell

Christina Tartera Donnell
Senior Petitions Attorney
Office of Petitions

UNITED STATES PATENT AND TRADEMARK OFFICE

UNITED STATES DEPARTMENT OF COMMERCE
United States Patent and Trademark Office
Address: COMMISSIONER FOR PATENTS
P.O. Box 1450
Alexandria, Virginia 22313-1450
www.uspto.gov

Patent Group
Microsoft Corporation
One Microsoft Way
Redmond, WA 98052

Mail Date: 04/21/2010

Applicant	: Jude Jacob Kavalam	: DECISION ON REQUEST FOR
Patent Number	: 7587594	: RECALCULATION of PATENT
Issue Date	: 09/08/2009	: TERM ADJUSTMENT IN VIEW
Appliction No	: 10/929,339	: OF WYETH AND NOTICE OF INTENT TO
Filed	: 08/30/2004	: ISSUE CERTIFICATE OF CORRECTION
		:

The Request for Recalculation is **GRANTED** to the extent indicated.

The patent term adjustment has been determined to be **1164** days. The USPTO will *sua sponte* issue a certificate of correction reflecting the amount of PTA days determined by the recalculation.

Prior to the issuance of the certificate of correction, the USPTO will afford patentee an opportunity to be heard and request reconsideration. Accordingly, patentee has **one month or thirty (30) days**, whichever is longer, to file a request for reconsideration of this patent term adjustment calculation. See 35 U.S.C. 154(b)(3)(B)(ii) and 37 CFR 1.322(a)(4). No extensions of time will be granted under 37 CFR 1.136.

Patentee should use document code PET.OP if electronically filing a request for reconsideration of this patent term adjustment calculation. The patentee must also include the information required by 37 CFR 1.705(b)(2) and the fee required by 37 CFR 1.18(e). If patentee does not file a timely request for reconsideration of this patent term adjustment calculation including the information required by 37 CFR 1.705(b)(2) and the fee required by 37 CFR 1.18(e), the USPTO will issue a certificate of correction reflecting the PTA determination noted above.

Patentee should be aware that in order to preserve the right to review in the United States District Court for the District of Columbia of the USPTO patent term adjustment determination, patentee must ensure that he or she also take the steps required under 35 U.S.C. 154(b)(4)(A) in a timely manner. Nothing in the request for recalculation should be construed as providing an alternative time frame for commencing a civil action under 35 U.S.C. 154(b)(4)(A).

Any questions concerning this decision should be directed to the Office of Patent Legal Administration at 571-272-7702.

UNITED STATES PATENT AND TRADEMARK OFFICE

Commissioner for Patents
United States Patent and Trademark Office
Washington, D.C. 20231
www.uspto.gov

Paper No.

LAURA C. HARGITT
General Motors Corporation
Legal Staff, Mail Code 482-C23-B21
P.O. Box 300
Detroit, MI 48265-3000

COPY MAILED

MAY 3 1 2005

OFFICE OF PETITIONS

In re Application of Gofron et al. Application No. 10/929,351 Filed: August 30, 2004 Attorney Docket No. GP-303737 Title: DUAL SPRING JOUNCE BUMPER ASSEMBLY	DECISION NOTING JOINDER OF INVENTOR and GRANTING REQUEST TO WITHDRAW PETITION

This is in response to the "PETITION FILED UNDER 37 CFR 1.47 INVENTOR WHO REFUSES TO SIGN APPLICATION" filed December 20, 2004.

The above-identified application was filed on August 30, 2004, without an executed oath or declaration. In reply to the "Notice to File Missing Parts of Nonprovisional Application - Filing Date Granted" mailed October 27, 2004, applicants timely filed the petition under §1.47(a) for acceptance of the declaration without the signature of inventor Gofron. Accompanying this petition were the fees required by the Notice, including the late declaration surcharge, along with a declaration executed by the signing inventors on behalf of themselves and on behalf of non-signing inventor Gofron. Applicants avoided abandonment of this application by filing the petition (and petition fee), 1.47 declaration and other responses on December 20, 2004.

Prior to a decision being rendered on the petition, on January 3, 2005, applicants filed a request to withdraw the petition. No consideration of the petition having been undertaken, the request is **granted**. The petition fee is being refunded to Deposit Account No. 07-0960, as authorized.

Accompanying the request was a declaration executed by inventor Gofron. To make this response timely, the fee for extension for response within the first month, to January 27, 2005, has been charged to Deposit Account No. 07-0960.

In view of the joinder of the inventor, consideration under 37 CFR 1.47(a) is not necessary. This application does not have any Rule 1.47(a) status and no such status should appear on the file wrapper. This application need not be returned to this Office for further consideration under 37 CFR 1.47.

It is further noted that on January 3, 2005, applicants submitted a letter requesting a change in the order of inventors. Such a request is by way of petition under § 1.182 with payment of the petition fee under § 1.17(f). No such petition and fee accompanied the request. Accordingly, the request is **DISMISSED**. A proper petition should be filed prior to the first Office action on the merits. Later filing of such a request may lead to reduction of any patent term adjustment earned or may require withdrawal of the application from issue to effectuate the change.

The application file will be examined in Technology Center AU 3683 in due course.

Telephone inquiries regarding this decision should be directed to the undersigned at (571) 272-3219.

Nancy Johnson
Senior Petitions Attorney
Office of Petitions

SPE RESPONSE FOR CERTIFICATE OF CORRECTION

DATE : 4/30/07

Paper No.: —

TO SPE OF : ART UNIT 2826

SUBJECT : Request for Certificate of Correction for Appl. No.: 10/929354 Patent No.: 7005672 B2

Please respond to this request for a certificate of correction within 7 days.

Please review the requested changes/corrections as shown in the **COCIN** document(s) in the IFW application image. No new matter should be introduced, nor should the scope or meaning of the claims be changed.

Please complete the response (see below) and forward the completed response to scanning using document code **COCX**.

Virginia Tolbert
Certificates of Correction Branch

703-308-9390 ext. 113

Thank You For Your Assistance

The request for issuing the above-identified correction(s) is hereby:
Note your decision on the appropriate box.

- ☒ **Approved** — All changes apply.
- ☐ **Approved in Part** — Specify below which changes **do not** apply.
- ☐ **Denied** — State the reasons for denial below.

Comments: _____

SUE A. PURVIS
SUPERVISORY PATENT EXAMINER
SPE Art Unit

UNITED STATES PATENT AND TRADEMARK OFFICE

Commissioner for Patents
United States Patent and Trademark Office
P.O. Box 1450
Alexandria, VA 22313-1450
www.uspto.gov

VOLENTINE FRANCOS & WHITT PLLC
ONE FREEDOM SQUARE
11951 FREEDOM DRIVE, SUITE 1260
RESTON, VA 20190

COPY MAILED

JAN 18 2007

OFFICE OF PETITIONS

In re Application of	:	
Yuuki Furuya et al	:	
Application No. 10/929,373	:	DECISION DISMISSING PETITION
Filed: August 31, 2004	:	UNDER 37 CFR 1.313(c)(2)
Attorney Docket No. OK1.329D	:	

This is a decision on the petition under 37 CFR 1.313(c)(2), filed December 26, 2006, to withdraw the above-identified application from issue after payment of the issue fee.

The petition is **DISMISSED AS MOOT**.

Unfortunately, no decision granting the petition was rendered prior to the issuance of this application into a patent. The rule at 37 CFR 1.313(d) states:

> A petition under this section will not be effective to withdraw the application from issue unless it is actually received and granted by the appropriate officials **before the date of issue**. (Emphasis added)

As the case has now issued, the petition to withdraw from issue cannot be granted. The Office sincerely apologizes for any inconvenience this matter has caused petitioner.

The request for continued examination (RCE) filed concurrently with the petition is improper in view of the issuance of this application into a patent and will not be processed. Accordingly, the $790 filing fee and the $130 petition fee submitted are unnecessary and will be refunded in due course.

The Information Disclosure Statement has been made of record in the file of the above-identified application without further consideration. *See* 37 CFR 1.97(i).

Telephone inquiries should be directed to the undersigned at (571) 272-3218.

Frances Hicks
Petitions Examiner
Office of Petitions

UNITED STATES PATENT AND TRADEMARK OFFICE

COMMISSIONER FOR PATENTS
UNITED STATES PATENT AND TRADEMARK OFFICE
P.O. BOX 1450
ALEXANDRIA, VA 22313-1450
www.uspto.gov

ANTONELLI, TERRY, STOUT & KRAUS, LLP
1300 NORTH SEVENTEENTH STREET
SUITE 1800
ARLINGTON VA 22209-3873

MAIL

APR 2 8 2005

DIRECTOR OFFICE
TECHNOLOGY CENTER 2100

In re Application of: Ninose, et al.
Application No. 10/929,380
Filed: August 31, 2004
For: STORAGE CONTROL APPARATUS AND STORAGE CONTROL METHOD

DECISION ON PETITION TO MAKE SPECIAL (ACCELERATED EXAMINATION) UNDER M.P.E.P. §708.02 (VIII)

This is a response to the petition filed 08 February 2005, under 37 C.F.R. §1.102(d) and M.P.E.P. §708.02 (VIII): Accelerated Examination, to make the above-identified application special.

The Petition is **DISMISSED**.

M.P.E.P. §708.02, Section VIII which sets out the prerequisites for a grantable petition for Accelerated Examination under 37 C.F.R. §1.102(d) states in relevant part:

A new application (one which has not received any examination by the examiner) may be granted special status provided that applicant (and this term includes applicant's attorney or agent) complies with each of the following items:

(a) Submits a petition to make special accompanied by the fee set forth in **37 CFR 1.17(h)**;

(b) Presents all claims directed to a single invention, or if the Office determines that all the claims presented are not obviously directed to a single invention, will make an election without traverse as a prerequisite to the grant of special status;

(c) Submits a statement(s) that a pre-examination search was made, listing the field of search by class and subclass, publication, Chemical Abstracts, foreign patents, etc. The pre-examination search must be directed to the invention as claimed in the application for which special status is requested. A search made by a foreign patent office satisfies this requirement;

(d) Submits one copy each of the references deemed most closely related to the subject matter encompassed by the claims if said references are not already of record; and

(e) Submits a detailed discussion of the references, which discussion points out, with the particularity required by 37 CFR 1.111 (b) and (c), how the claimed subject matter is patentable over the references.

In those instances where the request for this special status does not meet all the prerequisites set forth above, **applicant will be notified and the defects in the request will be stated**. The application will remain in the status of a new application awaiting action in its regular turn. In those instances where a request is defective in one or more respects, applicant will be given one opportunity to perfect the request in a renewed petition to make special. If perfected, the request will then be granted. If not perfected in the first renewed petition, any additional renewed petitions to make special may or may not be considered at the discretion of the Technology Center (TC) Special Program Examiner.

The petition filed 08 February 2005 fails to adequately meet requirement (e) of the criteria set forth above. The discussion of the references does not point out with the particularity required by 37 CFR 1.111(b) and (c) how the claimed subject matter is patentable over the references. The discussion of the references is confusing. Petitioner states that "none of the cited references teach or suggest the claimed relationships". Petitioner then goes on to state that the references fail to disclose, teach, or suggest essentially all of the limitations of independent claims 1 and 8 and fail to disclose, teach, or suggest essentially all of the limitations of independent claim 20. It is not clear if these statements are intended to mean that none of the elements of claims 1, 8, and 20 are disclosed by the prior art or that the entirety of claims 1, 8, and 20 are not disclosed by the prior art. If the intent is the former, it would be difficult to conclude that the search was directed to the claimed invention if essentially *none* of the claim limitations were found in the prior art deemed "most closely related". If the intent is the latter, a statement that the entirety of the three independent claims is not disclosed by the fifteen references purported to be "most closely related" is not a sufficient detailed description. Rather, the detailed discussion should be directed to how the language of each of the independent claims is specifically distinguishable and patentable from each of the references provided in requirement (d) above.

Petition to Make Special **DISMISSED**.

Petitioner is given one opportunity to perfect the petition. Any request for reconsideration must be filed within TWO MONTHS of the mail date of this decision.

Until the renewed petition is submitted, the application will be returned to the examiner's docket to await treatment on the merits in the normal order of examination.

Pinchus M. Laufer
Special Program Examiner
Technology Center 2100
Computer Architecture, Software and Information Security
571-272-3599

ds

UNITED STATES PATENT AND TRADEMARK OFFICE

COMMISSIONER FOR PATENTS
UNITED STATES PATENT AND TRADEMARK OFFICE
P.O. BOX 1450
ALEXANDRIA, VA 22313-1450
www.uspto.gov

MAIL

JUL 1 3 2005

DIRECTOR OFFICE
TECHNOLOGY CENTER 2100

ANTONELLI, TERRY, STOUT & KRAUS, LLP
1300 NORTH SEVENTEENTH STREET
SUITE 1800
ARLINGTON VA 22209-3873

In re Application of: Ninose, et al.
Application No. 10/929,380
Filed: August 31, 2004
For: STORAGE CONTROL APPARATUS AND STORAGE CONTROL METHOD

DECISION ON PETITION
TO MAKE SPECIAL
(ACCELERATED EXAMINATION)
UNDER M.P.E.P. §708.02 (VIII)

This is a response to the renewed petition filed 01 June 2005, under 37 C.F.R. §1.102(d) and M.P.E.P. §708.02 (VIII): Accelerated Examination, to make the above-identified application special.

The renewed petition was filed in response to a dismissal of the original petition filed 08 February 2005. The petition was dismissed for failure to provide a detailed discussion of the references, which discussion points out with the particularity required by 37 CFR 1.111(b) and (c), how the claimed subject matter is patentable over the references.

Applicants' submission filed 01 June 2005 corrects the deficiency noted in the original decision. The combined submissions meet all the criteria set out above. Accordingly, the petition is **GRANTED**.

The application file is being forwarded to the Examiner of Record for accelerated examination according to the procedures set forth in MPEP § 708.02, Section VIII.

Pinchus M. Laufer
Special Program Examiner
Technology Center 2100
Computer Architecture, Software and Information Security
571-272-3599

ds

UNITED STATES PATENT AND TRADEMARK OFFICE

UNITED STATES DEPARTMENT OF COMMERCE
United States Patent and Trademark Office
Address: COMMISSIONER FOR PATENTS
P.O. Box 1450
Alexandria, Virginia 22313-1450
www.uspto.gov

APPLICATION NO.	FILING DATE	FIRST NAMED INVENTOR	ATTORNEY DOCKET NO.	CONFIRMATION NO.
10/929,381	08/31/2004	Ha-Jin Kim	P57186	6523

7590 12/21/2007
Robert E. Bushnell
Suite 300
1522 K Street, N.W.
Washington, DC 20005

EXAMINER
STOUFFER, KELLY M

ART UNIT	PAPER NUMBER
1792	

MAIL DATE	DELIVERY MODE
12/21/2007	PAPER

Please find below and/or attached an Office communication concerning this application or proceeding.

The time period for reply, if any, is set in the attached communication.

UNITED STATES PATENT AND TRADEMARK OFFICE

Commissioner for Patents
United States Patent and Trademark Office
P.O. Box 1450
Alexandria, VA 22313-1450
www.uspto.gov

WK

Mailed: 12-21-07

In re application of Ha-Jin Kim et al. Serial No. 10/929,381 Filed: August 31, 2004 For: CARBON-NANO TUBE STRUCTURE, METHOD OF MANUFACTURING THE SAME , AND FIELD EMITTER AND DISPLAY DEVICE EACH ADOPTING THE SAME	:	DECISION ON PETITION

This is a decision on the PETITION TO THE RESTRICTION REQUIREMENT, made final on April 17, 2007.

On April 17, 2007, a final Office Action was mailed to Applicants. On July 17, 2007, Applicants request reconsideration to the restriction requirement and if reconsideration is not granted, to have this request treated as a Petition to the Commissioner.

DECISION

37 CFR § 1.181 Petition to the Director.

> (f) The mere filing of a petition will not stay any period for reply that may be running against the application, nor act as a stay of other proceedings. Any petition under this part not filed within two months of the mailing date of the action or notice from which relief is requested may be dismissed as untimely, except as otherwise provided. This two-month period is not extendable.

The instant petition was submitted by Petitioner on July 17, 2007 which falls more than **two** months after the date of the Final Office Action (April 17, 2007) thereby making the instant petition untimely under 37 CFR 1.181 (f).

The Petition is **DISMISSED**.

Jacqueline M. Stone/

Jacqueline Stone, Director
Technology Center 1700
Chemical and Materials Engineering

Robert E. Bushnell
Suite 300
1522 K Street, N.W.
Washington DC 20005

UNITED STATES PATENT AND TRADEMARK OFFICE

UNITED STATES DEPARTMENT OF COMMERCE
United States Patent and Trademark Office
Address: COMMISSIONER FOR PATENTS
P.O. Box 1450
Alexandria, Virginia 22313-1450
www.uspto.gov

APPLICATION NO.	FILING DATE	FIRST NAMED INVENTOR	ATTORNEY DOCKET NO.	CONFIRMATION NO.
10/929,381	08/31/2004	Ha-Jin Kim	P57186	6523

7590 02/22/2008

Robert E. Bushnell
Suite 300
1522 K Street, N.W.
Washington, DC 20005

EXAMINER
STOUFFER, KELLY M

ART UNIT	PAPER NUMBER
1792	

MAIL DATE	DELIVERY MODE
02/22/2008	PAPER

Please find below and/or attached an Office communication concerning this application or proceeding.

The time period for reply, if any, is set in the attached communication.

UNITED STATES PATENT AND TRADEMARK OFFICE

Commissioner for Patents
United States Patent and Trademark Office
P.O. Box 1450
Alexandria, VA 22313-1450
www.uspto.gov

gm

Mailed : 2-22-08

In re Application of	:	DECISION ON
Ha-Jin Kim et al	:	PETITION
Serial No. 10/929,381	:	
Filed: August 31, 2004	:	
For: CARBON-NANO TUBE STRUCTURE,	:	
METHOD OF MANUFACTURING THE SAME,	:	
AND FIELD EMITTER AND DISPLAY DEVICE	:	
EACH ADOPTING THE SAME	:	

This is a decision on the SECOND REQUEST FOR RECONSIDERATION/PETITION TO THE COMMISSIONER filed January 11, 2008.

A restriction requirement was made by the examiner on December 19, 2006, requiring restriction between Group I (claims 1-6 and 21-34, a carbon nanotube article) and Group II (claims 7-20, a method of making a carbon nanotube). Applicant provisionally elected Group II with traverse in the response of March 19, 2007, after which the requirement was made final by the examiner in the action mailed April 17, 2007. In addition to making the requirement final, the examiner held newly added claims 34-40 non-elected. Applicant petitioned against the restriction requirement on July 17, 2007, and the petition was dismissed as untimely on December 21, 2007, on the basis that it was not filed within two months of the final rejection. Meanwhile, prosecution on the case continued with an RCE (7/17/07), non-final rejection (9/5/07), amendment (11/16/07), and a final rejection (12/27/07).

The instant petition was then timely filed on January 11, 2008 and is before the Director of Technology Center 1700 for consideration. The petition requests withdrawal of the restriction requirement.

The petition is **DENIED** for the reasons below.

DECISION

Applicant first argues that examination of the two groups would not be a serious burden on the examiner.

Section 803 of the MPEP states:

> 803 Restriction - When Proper
>
> If the search and examination of an entire application can be made without serious burden, the examiner must examine it on the merits, even though it includes claims to independent or distinct inventions.

In making the restriction final (4/17/07), the examiner stated that a search of the non-elected claims would require searches that are not required for the claims of Group II. Additionally, the examiner has pointed out (4/17/07) that each group is classified in different class and subclasses. The position of the examiner is reasonable. While a search of the two groups of claims may be overlapping to some extent, considerable additional searching would be required for the non-elected group. Such a search would be a serious burden on the examiner in that the examiner would have to search prior art products unrelated to the instantly claimed method. Contrary to applicant's arguments, for example, no search in class 428 is required for the claimed methods, and a review of the search history in fact shows that none was performed.

Additionally, applicant argues that the products of claims 35-40 are limited to being manufactured by the explicitly recited method steps of claims 7 and 15, and should therefore not be restricted from the method.

As noted in MPEP 2113, "the patentability of a product does not depend on its method of production." In re Thorpe, 227 USPQ 964, 966 (Fed. Cir. 1985). Thus the examiner was correct in stating that products recited in claims 35-40 would be classified with the products of claims 1-6 and 21-34, and require the same field of search as those products. Similarly the examiner was correct in stating that claims 35-40 could be rejected by any prior art that discloses those products, regardless of the particular process used to make them. Determination of patentability of product-by-process claims is based on the product itself, not on the method of making it per se. See generally Chism on Patents, Volume 3, Chapter 8, Section 8.05(3). This is true regardless of whether the product-by-process claim is in independent or dependent form. See Scripps Clinic & Research Foundation v. Genentech Inc., 18 USPQ2d 1001 (Fed. Cir. 1991), in which the Federal Circuit, in discussing a product-by-process claim in dependent form, noted that "correct reading of product-by-process claims is that they are not limited to product prepared by the process set forth in the claims."

The examiner was thus correct in both finding that a serious burden would exist and in finding the product-by-process claims to be distinct from the process claims.

Accordingly, the petition to withdraw the restriction requirement is **DENIED**.

Jacqueline M. Stone

Jacqueline M. Stone, Director
Technology Center 1700
Chemical and Materials Engineering

Robert E. Bushnell
Suite 300
1522 K Street, N.W.
Washington DC 20005

PTO/SB/66 (03-09)
Approved for use through 03/31/2012. OMB 0651-0016
U.S. Patent and Trademark Office: U.S. DEPARTMENT OF COMMERCE
Under the Paperwork Reduction Act of 1995, no persons are required to respond to a collection of information unless it displays valid OMB control number.

PETITION TO ACCEPT UNINTENTIONALLY DELAYED PAYMENT OF MAINTENANCE FEE IN AN EXPIRED PATENT (37 CFR 1.378(c))

Patent Number	Issue Date (YYYY-MM-DD)	Application Number	Filing Date (YYYY-MM-DD)	Docket Number (if applicable)
6902978	2005-06-07	10929396	2004-08-31	4006-227A

CAUTION: Maintenance fee (and surcharge, if any) payment must correctly identify: (1) the patent number and (2) the application number of the actual U.S. application leading to issuance of that patent to ensure the fee(s) is/are associated with the correct patent. 37 CFR 1.366(c) and (d).

SMALL ENTITY
☐ Patentee claims, or has previously claimed, small entity status. See 37 CFR 1.27.

LOSS OF ENTITLEMENT TO SMALL ENTITY STATUS
☐ Patentee is no longer entitled to small entity status. See 37 CFR 1.27(g)

NOT Small Entity		Small Entity	
Fee	Code	Fee	Code
◉ 3 ½ year	(1551)	○ 3 ½ year	(2551)
○ 7 ½ year	(1552)	○ 7 ½ year	(2552)
○ 11 ½ year	(1553)	○ 11 ½ year	(2553)

SURCHARGE
The surcharge required by 37 CFR 1.20(i)(2) (Fee Code 1558) must be paid as a condition of accepting unintentionally delayed payment of the maintenance fee.

MAINTENANCE FEE (37 CFR 1.20(e)-(g))
The appropriate maintenance fee must be submitted with this petition.

STATEMENT
THE UNDERSIGNED CERTIFIES THAT THE DELAY IN PAYMENT OF THE MAINTENANCE FEE TO THIS PATENT WAS UNINTENTIONAL

PETITIONER(S) REQUEST THAT THE DELAYED PAYMENT OF THE MAINTENANCE FEE BE ACCEPTED AND THE PATENT REINSTATED

THIS PORTION MUST BE COMPLETED BY THE SIGNATORY OR SIGNATORIES

37 CFR 1.378(d) states: "Any petition under this section must be signed by an attorney or agent registered to practice before the Patent and Trademark Office, or by the patentee, the assignee, or other party in interest."

I certify, in accordance with 37 CFR 1.4(d)(4) that I am

◉ An attorney or agent registered to practice before the Patent and Trademark Office

○ A sole patentee

○ A joint patentee; I certify that I am authorized to sign this submission on behalf of all the other patentees.

○ A joint patentee; all of whom are signing this e-petition

○ The assignee of record of the entire interest

Patent Practitioner			
A signature of the applicant or representative is required in accordance with 37 CFR 1.33 and 10.18. Please see 37 CFR 1.4(d) for the form of the signature			
Signature	/Kendal M. Sheets/	Date (YYYY-MM-DD)	2009-12-16
Name	Kendal M. Sheets	Registration Number	47077

This collection of information is required by 37 CFR 1.378(c). The information is required to obtain or retain a benefit by the public which is to file (and by the USPTO to process) an application. Confidentiality is governed by 35 U.S.C. 122 and 37 CFR 1.11 and 1.14. This collection is estimated to take 1 hour to complete, including gathering, preparing, and submitting the completed application form to the USPTO. Time will vary depending upon the individual case. Any comments on the amount of time you require to complete this form and/ or suggestions for reducing this burden, should be sent to the Chief Information Officer, U.S. Patent and Trademark Office, U.S. Department of Commerce, P.O. Box 1450, Alexandria, VA 22313-1450. DO NOT SEND FEES OR COMPLETED FORMS TO THIS ADDRESS. **This form can only be used when in conjunction with EFS-Web. If this form is mailed to the USPTO, it may cause delays in reinstating the patent.**

Privacy Act Statement

The Privacy Act of 1974 (P.L. 93-579) requires that you be given certain information in connection with your submission of the attached form related to a patent application or patent. Accordingly, pursuant to the requirements of the Act, please be advised that: (1) the general authority for the collection of this information is 35 U.S.C. 2(b)(2); (2) furnishing of the information solicited is voluntary; and (3) the principal purpose for which the information is used by the U.S. Patent and Trademark Office is to process and/or examine your submission related to a patent application or patent. If you do not furnish the requested information, the U.S. Patent and Trademark Office may not be able to process and/or examine your submission, which may result in termination of proceedings or abandonment of the application or expiration of the patent.

The information provided by you in this form will be subject to the following routine uses:

1. The information on this form will be treated confidentially to the extent allowed under the Freedom of Information Act (5 U.S.C. 552) and the Privacy Act (5 U.S.C. 552a). Records from this system of records may be disclosed to the Department of Justice to determine whether the Freedom of Information Act requires disclosure of these records.

2. A record from this system of records may be disclosed, as a routine use, in the course of presenting evidence to a court, magistrate, or administrative tribunal, including disclosures to opposing counsel in the course of settlement negotiations.

3. A record in this system of records may be disclosed, as a routine use, to a Member of Congress submitting a request involving an individual, to whom the record pertains, when the individual has requested assistance from the Member with respect to the subject matter of the record.

4. A record in this system of records may be disclosed, as a routine use, to a contractor of the Agency having need for the information in order to perform a contract. Recipients of information shall be required to comply with the requirements of the Privacy Act of 1974, as amended, pursuant to 5 U.S.C. 552a(m).

5. A record related to an International Application filed under the Patent Cooperation Treaty in this system of records may be disclosed, as a routine use, to the International Bureau of the World Intellectual Property Organization, pursuant to the Patent Cooperation Treaty.

6. A record in this system of records may be disclosed, as a routine use, to another federal agency for purposes of National Security review (35 U.S.C. 181) and for review pursuant to the Atomic Energy Act (42 U.S.C. 218(c)).

7. A record from this system of records may be disclosed, as a routine use, to the Administrator, General Services, or his/her designee, during an inspection of records conducted by GSA as part of that agency's responsibility to recommend improvements in records management practices and programs, under authority of 44 U.S.C. 2904 and 2906. Such disclosure shall be made in accordance with the GSA regulations governing inspection of records for this purpose, and any other relevant (i.e., GSA or Commerce) directive. Such disclosure shall not be used to make determinations about individuals.

8. A record from this system of records may be disclosed, as a routine use, to the public after either publication of the application pursuant to 35 U.S.C. 122(b) or issuance of a patent pursuant to 35 U.S.C. 151. Further, a record may be disclosed, subject to the limitations of 37 CFR 1.14, as a routine use, to the public if the record was filed in an application which became abandoned or in which the proceedings were terminated and which application is referenced by either a published application, an application open to public inspections or an issued patent.

9. A record from this system of records may be disclosed, as a routine use, to a Federal, State, or local law enforcement agency, if the USPTO becomes aware of a violation or potential violation of law or regulation.

UNITED STATES PATENT AND TRADEMARK OFFICE

Commissioner for Patents
United States Patent and Trademark Office
P.O. Box 1450
Alexandria, VA 22313-1450
www.uspto.gov

In re Patent No. 6902978
Issue Date: June 7,2005
Application No. 10929396
Filed: August 31,2004
Attorney Docket No. 4006-227A

:
:DECISION GRANTING PETITION
:UNDER 37 CFR 1.378(c)
:

This is a decision on the electronic petition, filed December 16,2009 ,under 37 CFR 1.378(c) to accept the unintentionally delayed payment of the 3.5 year maintenance fee for the above-identified patent.

The petition is **GRANTED**.

The maintenance fee is accepted, and the above-identified patent reinstated as of December 16,2009 . This decision also constitutes notice that the fee has been accepted. An electronic copy of the petition and this decision has been created as an entry in the Image File Wrapper. Nevertheless, petitioner should print and retain an independent copy.

Telephone inquiries related to this electronic decision should be directed to the Electronic Business Center at 1-866-217-9197.

UNITED STATES PATENT AND TRADEMARK OFFICE

Commissioner for Patents
United States Patent and Trademark Office
P.O. Box 1450
Alexandria, VA 22313-1450
www.uspto.gov

COPY MAILED
MAY 26 2006
OFFICE OF PETITIONS

NIXON & VANDERHYE, PC
901 NORTH GLEBE ROAD, 11TH FLOOR
ARLINGTON VA 22203

In re Application of :
Kazuhiko Fukuta et al :
Application No. 10/929,432 : ON PETITION
Filed: August 31, 2004 :
Attorney Docket No. 1035-531 :

This is a decision on the petition, filed May 25, 2006, under 37 CFR 1.313(c)(2) to withdraw the above-identified application from issue after payment of the issue fee.

The petition is **GRANTED**.

The above-identified application is withdrawn from issue for consideration of a submission under 37 CFR 1.114 (request for continued examination). See 37 CFR 1.313(c)(2).

Petitioner is advised that the issue fee paid on April 24, 2006, in the above-identified application cannot be refunded. If, however, the above-identified application is again allowed, petitioner may request that it be applied towards the issue fee required by the new Notice of Allowance.[1]

Telephone inquiries should be directed to the undersigned at (571) 272-3208.

The examiner of Technology Center AU 2871 will consider the request for continued examination under 37 CFR 1.114.

Karen Creasy
Petitions Examiner
Office of Petitions

---

[1] The request to apply the issue fee to the new Notice may be satisfied by completing and returning the new Issue Fee Transmittal Form PTOL-85(b), which includes the following language thereon: "Commissioner for Patents is requested to apply the Issue Fee and Publication Fee (if any) or re-apply any previously paid issue fee to the application identified above." Petitioner is advised that, whether a fee is indicated as being due or not, the Issue Fee Transmittal Form **must** be completed and timely submitted to avoid abandonment. Note the language in bold text on the first page of the Notice of Allowance and Fee(s) Due (PTOL-85).

UNITED STATES PATENT AND TRADEMARK OFFICE

COMMISSIONER FOR PATENTS
UNITED STATES PATENT AND TRADEMARK OFFICE
P.O. BOX 1450
ALEXANDRIA, VA 22313-1450
www.uspto.gov

Paper No. _____

Date : May 26, 2006

TO : Director, Office of Patent Publication

FROM : Office of the Deputy Commissioner
for Patent Examination Policy

SUBJECT : Withdrawal from Issue of

Applicant(s) :Kazuhiko Fukuta et al
Application No. :10/929,432
Filed :August 31, 2004

The above-identified application has been assigned Patent No. 7,061,557 and an issue date of June 13, 2006.

It is hereby directed that this application be withdrawn from issue at the request of the applicant.

Do not refund the issue fee.

The following erratum should be published in the Official Gazette if the above-identified application is published in the OG of June 13, 2006:

> "All reference to Patent No. 7,061,557 to Kazuhiko Fukuta et al of Japan for SEMICONDUCTOR DEVICE, LIQUID CRYSTAL MODULE ADOPTING SAME, METHOD OF MANUFACTURING LIQUID CRYSTAL MODULE, AND ELECTRONIC EQUIPMENT ADOPTING SAME appearing in the Official Gazette of June 13, 2006 should be deleted since no patent was granted."

Karen Creasy

Karen Creasy
Petitions Examiner
Office of Petitions
Office of the Deputy Commissioner
for Patent Examination Policy

cc: Paul Harrison, MDW-4B03,(FAX-273-5468)
Deneise Boyd, MDE-3D39 (FAX-273-5124)
Mary Louise McAskill, ST-8C15 (FAX 305-4372)
Niomi Farmer, ST-8C14 (FAX-305-4372)
Mary E. Johnson (Cookie), MDE-7C71 (FAX 273-0038
Duane Davis P/OPC MDE-7D89

UNITED STATES PATENT AND TRADEMARK OFFICE

Commissioner for Patents
United States Patent and Trademark Office
P.O. Box 1450
Alexandria, VA 22313-1450
www.uspto.gov

MCKENNA LONG & ALDRIDGE LLP
1900 K STREET, NW
WASHINGTON DC 20006

MAILED

APR 17 2009

OFFICE OF PETITIONS

In re Application of	:	
Kim et al.	:	
Application No. 10/929,453	:	DECISION ON PETITION
Filed: August 31, 2004	:	
Attorney Docket No. 8734.057 C1	:	

This is a decision on the petition under the unintentional provisions of 37 CFR 1.137(b), filed December 22, 2006, to revive the above-identified application.

The petition is **GRANTED**.

This application became abandoned for failure to timely pay the issue and publication fees on or before December 21, 2006, as required by the Notice of Allowance and Fee(s) Due mailed September 21, 2006. Accordingly, the date of abandonment of this application is December 22, 2006.

The petition satisfies the requirements of 37 CFR 1.137(b) in that petitioner has supplied (1) the reply in the form of payment of the issue fee of $1,400.00, and a Request for Continued Examination and fee of $790.00; (2) the petition fee of $1,500.00; and (3) a proper statement of unintentional delay.

The instant application matured into Patent No. 7,311,228 on December 25, 2007. Accordingly, no further action is required.

Telephone inquiries concerning this decision should be directed to Joan Olszewski at (571) 272-7751.

/Liana Walsh/
Liana Walsh
Petitions Examiner
Office of Petitions

UNITED STATES PATENT AND TRADEMARK OFFICE

Commissioner for Patents
United States Patent and Trademark Office
P.O. Box 1450
Alexandria, VA 22313-1450
www.uspto.gov

PATTERSON, THUENTE, SKAAR & CHRISTENSEN, P.A.
4800 IDS CENTER
80 SOUTH 8TH STREET
MINNEAPOLIS MN 55402-2100

MAILED

MAY 28 2009

OFFICE OF PETITIONS

In re Patent No. 7,497,891	:
Issued: March 3, 2009	: DECISION ON APPLICATION
Application No. 10/929,501	: FOR PATENT TERM ADJUSTMENT
Filed: August 31, 2004	:
Attorney Docket No. 3595.66US01	:
	:

This is a decision on the "PETITION UNDER 37 C.F.R. § 1.705(d)" filed May 4, 2009, requesting that the patent term adjustment determination for the above-identified patent be changed from eight hundred sixty-nine (869) days to one thousand fifty-one (1051) days.

The request for reconsideration of patent term adjustment is **DISMISSED**.

On March 3, 2009, the above-identified application matured into US Patent No. 7,497,891 with a patent term adjustment of 869 days. This request for reconsideration of patent term adjustment was timely filed within two months (May 3, 2009 fell on a Sunday) of the issue date of the patent. See 37 CFR 1.705(d).

The Office acknowledges submission of the $200.00 fee set forth in 37 CFR 1.18(e). No additional fees are required.

Patentees request recalculation of the patent term adjustment based on the decision in Wyeth v. Dudas, 580 F. Supp. 2d 138, 88 U.S.P.Q. 2d 1538 (D.D.C. 2008). Patentees assert that in view of the decision in Wyeth, they are entitled to a total patent term adjustment of 1251 days, the sum of 382 days of patent term adjustment due to exceeding three year pendency and 869 days due to USPTO delay in prosecution.

The 382-day period is calculated based on the application having been filed under 35 U.S.C. 111(a) on August 31, 2004, and the patent having been issued on March 3, 2009, three years and 382 days later. Patentees assert that in addition to this 382-day period, they are entitled to a period of adjustment due to examination delay pursuant to 37 CFR 1.702(a), of 869 days for the failure by the Office to mail at least one of a

notification under 35 U.S.C. 132 not later than fourteen months after the date on which the application was filed under 35 U.S.C. 111(a), pursuant to 37 CFR 1.702(a)(1).

Under 37 CFR 1.703(f), patentees are entitled to a period of patent term adjustment equal to the period of delays based on the grounds set forth in 37 CFR 1.702 reduced by the period of time equal to the period of time during which patentees failed to engage in reasonable efforts to conclude prosecution pursuant to 37 CFR 1.704. In other words, it is the period of Office delay reduced by the period of applicant delay. In this instance there is no dispute that there has been no reduction for applicant delay.

Patentees do not dispute that the total period of Office delay is the sum of the period of Three Years Delay (382 days) and the period of Examination Delay (869 days) and adds that 200 days overlap with the period of 14-month examination delay. Accordingly, patentees submit that the total period of adjustment for Office delay is 1251 days, which is the sum of the period of Three Year Delay (382 days) and the period of Examination Delay (869 days), reduced by the period of overlap (200 days). As such, patentees assert entitlement to a patent term adjustment of 1051 days (382 + 869 reduced by 200 overlap – 0 (applicant delay)).

The Office agrees that as of the issuance of the patent on March 3, 2009, the application was pending more than three years after its filing date. The Office agrees that the action detailed above was not taken within the specified time frame, and thus, the entry of a period of adjustment of 869 days is correct. At issue is whether patentees should accrue any additional days of patent term adjustment for the Office taking in excess of three years to issue the patent, as well as 869 days for Office failure to take a certain action within a specified time frame (or examination delay).

The Office contends that 382 days overlap. Patentees' calculation of the period of overlap is inconsistent with the Office's interpretation of this provision. 35 U.S.C. 154(b)(2)(A) limits the adjustment of patent term, as follows:

> to the extent that the periods of delay attributable to grounds specified in paragraph (1) overlap, the period of any adjustment granted under this subsection shall not exceed the actual number of days the issuance of the patent was delayed.

Likewise, 35 CFR 1.703(f) provides that:

> To the extent that periods of delay attributable to the grounds specified in § 1.702 overlap, the period of adjustment granted under this section shall not exceed the actual number of days the issuance of the patent was delayed.

As explained in *Explanation of 37 CFR 1.703(f) and of the United States Patent and Trademark Office Interpretation of 35 U.S.C. 154(b)(2)(A)*, 69 Fed. Reg. 34283 (June 21, 2004), the Office interprets 35 U.S.C. 154(b)(2)(A) as permitting either patent term adjustment under 35 U.S.C. 154(b)(1)(A)(i)-(iv), or patent term adjustment under 35 U.S.C. 154(b)(1)(B), but not as permitting patent term adjustment under both 35 U.S.C. 154(b)(1)(A)(i)-(iv) and 154(b)(1)(B). Accordingly, the Office implements the overlap provision as follows:

> If an application is entitled to an adjustment under 35 U.S.C. 154(b)(1)(B), the entire period during which the application was pending (except for periods excluded under 35 U.S.C. 154(b)(1)(B)(i)-(iii)), and not just the period beginning three years after the actual filing date of the application, is the period of delay under 35 U.S.C. 154(b)(1)(B) in determining whether periods of delay overlap under 35 U.S.C. 154(b)(2)(A). Thus, any days of delay for Office issuance of the patent more than 3 years after the filing date of the application, which overlap with the days of patent term adjustment accorded prior to the issuance of the patent will not result in any additional patent term adjustment. See 35 U.S.C. 154(b)(1)(B), 35 U.S.C. 154(b)(2)(A), and 37 CFR § 1.703(f). See *Changes to Implement Patent Term Adjustment Under Twenty Year Term; Final Rule*, 65 Fed. Reg. 56366 (Sept. 18, 2000). See also *Revision of Patent Term Extension and Patent Term Adjustment Provisions; Final Rule*, 69 Fed. Reg. 21704 (April 22, 2004), 1282 Off. Gaz. Pat. Office 100 (May 18, 2004). See also *Explanation of 37 CFR 1.703(f) and of the United States Patent and Trademark Office Interpretation of 35 U.S.C. 154(b)(2)(A),* 69 Fed. Reg. 34283 (June 21, 2004).

The current wording of § 1.703(f) was revised in response to the misinterpretation of this provision by a number of Patentees. The rule was slightly revised to more closely track the corresponding language of 35 U.S.C. 154(b)(2)(A). The relevant portion differs only to the extent that the statute refers back to provisions of the statute whereas the rule refers back to sections of the rule. This was not a substantive change to the rule nor did it reflect a change of the Office's interpretation of 35 U.S.C. 154(b)(2)(A). As stated in the *Explanation of 37 CFR 1.703(f) and of the United States Patent and Trademark Office Interpretation of 35 U.S.C. 154(b)(2)(A)*, the Office has consistently taken the position that if an application is entitled to an adjustment under the three-year pendency provision of 35 U.S.C. 154(b)(1)(B), the entire period during which the application was pending before the Office (except for periods excluded under 35 U.S.C. 154(b)(1)(B)(i)-(iii)), and not just the period beginning three years after the actual filing date of the application, is the relevant period under 35 U.S.C. 154(b)(1)(B) in determining whether periods of delay "overlap" under 35 U.S.C. 154(b)(2)(A).

This interpretation is consistent with the statute. Taken together the statute and rule provide that to the extent that periods of delay attributable to grounds specified in 35 U.S.C. 154(b)(1) and in corresponding § 1.702 overlap, the period of adjustment

granted shall not exceed the actual number of days the issuance of the patent was delayed. The grounds specified in these sections cover the A) guarantee of prompt Patent and Trademark Office responses, B) guarantee of no more than 3-year application pendency, and C) guarantee or adjustments for delays due to interference, secrecy orders and appeals. A section by section analysis of 35 U.S.C. 154(b)(2)(A) specifically provides that:

> Section 4402 imposes limitations on restoration of term. In general, pursuant to [35 U.S.C.] 154(b)(2)(A)-(C), total adjustments granted for restorations under [35 U.S.C. 154](b)(1) are reduced as follows: (1) To the extent that there are multiple grounds for extending the term of a patent that may exist simultaneously (e.g., delay due to a secrecy order under [35 U.S.C.] 181 and administrative delay under [35 U.S.C.] 154(b)(1)(A)), the term should not be extended for each ground of delay but only for the actual number of days that the issuance of a patent was delayed; See 145 Cong. Rec. S14,718[1]

As such, the period for over three-year pendency does not overlap only to the extent that the actual dates in the period beginning three years after the date on which the application was filed overlap with the actual dates in the periods for failure of the Office to take action within specified time frames. In other words, consideration of the overlap does not begin three years after the filing date of the application.

In this instance, the relevant period under 35 U.S.C. 154(b)(1)(B) in determining whether periods of delay "overlap" under 35 U.S.C. 154(b)(2)(A) is the entire period during which the application was pending before the Office, August 31, 2004, to the date the patent issued on March 3, 2009. Prior to the issuance of the patent, 869 days of patent term adjustment were accorded for the Office failing to respond within a specified time frame during the pendency of the application. All of the 382 days for Office delay in issuing the patent overlap with the 869 days of Office delay. During that time, the issuance of the patent was delayed by 869 days, not 869 + 382 days. The Office took 14 months and 869 days to issue a first Office action. Otherwise, the Office took all actions set forth in 37 CFR 1.702(a) within the prescribed time frames. Nonetheless, given the initial 869 days of Office delay and the time allowed within the time frames for processing and examination, as of the date the patent issued, the application was pending three years and 382 days. The Office did not delay 869 days and then an additional 382 days. Accordingly, 869 days of patent term adjustment (not 869 and 382 days) was properly entered since the period of delay of 382 days attributable to the delay in the issuance of the patent overlaps with the adjustment of

---

[1] The AIPA is title IV of the Intellectual Property and Communications Omnibus Reform Act of 1999 (S. 1948), which was incorporated and enacted as law as part of Pub. L. 106-113. The Conference Report for H.R. 3194, 106th Cong. 1st Sess. (1999), which resulted in Pub. L. 106-113, does not contain any discussion (other than the incorporated language) of S. 1948. A section-by-section analysis of S. 1948, however, was printed in the Congressional Record at the request of Senator Lott, See 145 Cong. Rec. S14,708-26 (1999)(daily ed. Nov. 17, 1999).

869 days attributable to grounds specified in § 1.702(a)(1). Entry of both periods is not warranted. Thus, 869 days is determined to be the actual number of days that the issuance of the patent was delayed, considering the 382 days over three years to the issuance of the patent.

Accordingly, at issuance, the Office properly entered no additional days of patent term adjustment for the Office taking in excess of three years to issue the patent.

In view thereof, no adjustment to the patent term will be made.

Telephone inquiries specific to this decision should be directed to Senior Petitions Attorney Patricia Faison-Ball at (571) 272-3212.

Kery A. Fries
Senior Legal Advisor
Office of Patent Legal Administration
Office of Deputy Commissioner
for Examination Policy

SPE RESPONSE FOR CERTIFICATE OF CORRECTION

Paper No.: —

DATE : 4/22/08

TO SPE OF : ART UNIT 2854

SUBJECT : Request for Certificate of Correction for Appl. No.: 10/929527 Patent No: 7056046 B2

A response is requested with respect to a request for a certificate of correction.

With respect to the change(s) requested to correct Office and/or Applicant's errors, should the patent read as shown in the certificate of correction attached herewith or the COCIN document(s), in IFW images for the above-identified patented application? No new matter should be introduced, nor should the scope or meaning of the claims be changed.

If the response is for an IFW, within 7 days, please complete and forward the response, to the employee (named below) via scanning into application images, using document code **COCX**.

If the response is for a paper file wrapper, please complete the response and forward the response with the paper file wrapper, to the employee (named below), within 7 days, to:

Certificates of Correction Branch (CofC)
South Tower - 9A22
Palm Location 7580

VIRGINIA TOLBERT
Certificates of Correction Branch
703-308-9390 ext. 113

Thank You For Your Assistance

The request for issuing the above-identified correction(s) is hereby:
Note your decision on the appropriate box.

- ☑ **Approved** — All changes apply.
- ☐ **Approved in Part** — Specify below which changes **do not** apply.
- ☐ **Denied** — State the reasons for denial below.

Comments: _____

Judy Nguyen
JUDY NGUYEN
SUPERVISORY PATENT EXAMINER

SPE

2854
Art Unit

UNITED STATES PATENT AND TRADEMARK OFFICE

Commissioner for Patents
United States Patent and Trademark Office
P.O. Box 1450
Alexandria, VA 22313-1450
www.uspto.gov

MARSHALL, GERSTEIN & BORUN LLP
233 S. WACKER DRIVE, SUITE 6300
SEARS TOWER
CHICAGO IL 60606

COPY MAILED

JUN 23 2008

OFFICE OF PETITIONS

In re Application of	:	
Fung, Hon Wah	:	
Application No. 10/929,532	:	DECISION ON PETITION
Filed: August 30, 2004	:	
Attorney Docket No. 29869/40000	:	

This is a decision on the petition under the unintentional provisions of 37 CFR 1.137(b), filed May 30, 2008, to revive the above-identified application.

The petition is **GRANTED**.

The petition satisfies the requirements of 37 CFR 1.137(b) in that petitioner has supplied (1) the reply in the form of an Amendment, (2) the petition fee, and (3) a proper statement of unintentional delay.

An extension of time under 37 CFR 1.136 must be filed prior to the expiration of the maximum extendable period for reply. See In re Application of S., 8 USPQ2d 1630, 1631 (Comm'r Pats. 1988). Accordingly, since the $525.00 extension of time fee submitted with the petition on May 30, 2008 was subsequent to the maximum extendable period for reply, this fee is unnecessary and will be refunded to petitioner's credit card.

Telephone inquiries concerning this decision should be directed to the undersigned at (571) 272-3206.

This matter is being referred to Technology Center 3725 for further examination on the merits.

Liana Walsh
Petitions Examiner
Office of Petitions

UNITED STATES PATENT AND TRADEMARK OFFICE

Commissioner for Patents
United States Patent and Trademark Office
P.O. Box 1450
Alexandria, VA 22313-1450
www.uspto.gov

Thomas E. Clotti
Morrison Y Foerster LLP
1650 Tysons Boulevard
Suite 300
Mclean, VA 22102

COPY MAILED
JUL 28 2006
OFFICE OF PETITIONS

In re Application of
Thomas R. Wolzien
Application No. 10/929,542
Filed: January 13, 2006
Attorney Docket No. 15775.0003

DECISION ON PETITION
TO WITHDRAW
FROM RECORD

This is a decision on the Request to Withdraw as attorney or agent of record under 37 C.F.R. § 1.36(b), filed January 13, 2006.

The request is **APPROVED**.

A grantable request to withdraw as attorney/agent of record must be signed by every attorney/agent seeking to withdraw or contain a clear indication that one attorney is signing on behalf of another/others. A request to withdraw will not be approved unless at least 30 (thirty) days would remain between the date of approval and the later of the expiration date of a time to file a response or the expiration date of the maximum time period which can be extended under 37 C.F.R. § 1.136(a).

The request was signed by Thomas E. Clotti on behalf of all attorneys of record.

All attorneys/agents associated have been withdrawn.

Applicant is reminded that there is no attorney of record at this time.

The request to change the correspondence of record is not acceptable as the requested correspondence address is not that of: (1) the first named signing inventor; or (2) an intervening assignee of the entire interest under 37 C.F.R 3.71. All future communications from the Office will be directed to the first named signing inventor of the entire interest at the first copied address below until otherwise properly notified by the applicant.

There is no outstanding Office action at this time.

Telephone inquiries concerning this decision should be directed to Terri Williams at 571-272-2991.

David Bucci
Petitions Examiner
Office of Petitions

cc: Thomas R. Wolzien
91 River Road
Grandview-on-Hudson, NY 10960

cc: Scott W. Doyle, Esq.
Steptoe & Johnson LLP
1330 Connecticut Avenue, N.W.
Washington D.C. 20036

UNITED STATES PATENT AND TRADEMARK OFFICE

Commissioner for Patents
United States Patent and Trademark Office
P.O. Box 1450
Alexandria, VA 22313-1450
www.uspto.gov

DENNISON SCHULTZ DOUGHERTY & MacDONALD
1727 KING STREET, SUITE 105
ALEXANDRIA, VA 22314

COPY MAILED

JUL 2 0 2005

OFFICE OF PETITIONS

In re Application of :
Cheng Tsai Lai :
Application No. 10/929,565 : DECISION ON PETITION
Filed: August 31, 2004 :
Attorney Docket No. 3223/30 :

This is a decision on the petition under 37 CFR 1.137(b), filed May 23, 2005, to revive the above-identified application.

The petition is **DISMISSED**.

Any request for reconsideration of this decision must be submitted within TWO (2) MONTHS from the mail date of this decision. Extensions of time under 37 CFR 1.136(a) are permitted. The reconsideration request should include a cover letter entitled "Renewed Petition under 37 CFR 1.137(b)." This is **not** a final agency action within the meaning of 5 U.S.C. § 704.

This application became abandoned for failure to reply to the Notices mailed January 27, 2005, which required (1) payment of the issue fee in the amount of $700; (2) payment of the publication fee in the amount of $300; and (3) corrected formal drawings. As a reply to the Notices was not received within the three month period provided, the date of abandonment of this application is April 28, 2005.

A grantable petition under 37 CFR 1.137(b) must be accompanied by: (1) the required reply, unless previously filed; (2) the petition fee as set forth in 37 CFR 1.17(m); (3) a statement that the entire delay in filing the required reply from the due date for the reply until the filing of a grantable petition pursuant to 37 CFR 1.137(b) was unintentional; and (4) any terminal disclaimer (and fee as set forth in 37 CFR 1.20(d)) required by 37 CFR

1.137(c). Where there is a question as to whether either the abandonment or the delay in filing a petition under 37 CFR 1.137 was unintentional, the Commissioner may require additional information. See MPEP 711.03(c)(III)(C) and (D). The instant petition lacks item (1).

While the issue fee has been received, there is no indication that corrected formal drawings as required by the Notice of Allowability mailed January 12, 2005 have been received. Accordingly, before revival of this application can be effected, corrected formal drawings as required by the Notice must be submitted.

37 CFR 1.137(b)(3) requires a statement that the entire delay in filing the required reply from the due date for the reply until the filing of a grantable petition pursuant to 37 CFR 1.137(b) was unintentional. Since the statement contained in the instant petition varies from the language required by 37 CFR 1.137(b)(3), the statement contained in the instant petition is being construed as the statement required by 37 CFR 1.137(b)(3) and petitioner must notify the Office if this is **not** a correct interpretation of the statement contained in the instant petition.

Further correspondence with respect to this matter should be addressed as follows:

By mail: Mail Stop PETITIONS
Commissioner for Patents
Post Office Box 1450
Alexandria, VA 22313-1450

By hand: Customer Service Window
Mail Stop Petitions
Randolph Building
401 Dulany Street
Alexandria, VA 22314

By fax: (703) 872-9306
ATTN: Office of Petitions

Any questions concerning this matter may be directed to the undersigned at (571) 272-3218.

Frances Hicks
Petitions Examiner
Office of Petitions

UNITED STATES PATENT AND TRADEMARK OFFICE

Commissioner for Patents
United States Patent and Trademark Office
P.O. Box 1450
Alexandria, VA 22313-1450
www.uspto.gov

DENNISON SCHULTZ DOUGHERTY & MacDONALD
1727 KING STREET, SUITE 105
ALEXANDRIA, VA 22314

COPY MAILED

NOV 09 2005

OFFICE OF PETITIONS

In re Application of	:	
Cheng Tsai Lai	:	
Application No. 10/929,565	:	DECISION GRANTING PETITION
Filed: August 31, 2004	:	UNDER 37 CFR 1.137(b)
Attorney Docket No. 3223/30	:	

This is a decision on the renewed petition under 37 CFR 1.137(b), filed September 19, 2005, to revive the above-identified application.

The petition is **GRANTED**.

The petition satisfies the conditions for revival pursuant to the provisions of 37 CFR 1.137(b) in that (1) the reply in the form of payment of the issue and publication fees and corrected formal drawings (which have been approved by the official draftsperson as noted in the attached PTO Form 948); (2) the petition fee; and (3) an adequate statement of unintentional delay have been received. Accordingly, the reply to the Notices of January 27, 2005 areis accepted as having been unintentionally delayed.

Telephone inquiries concerning this decision should be directed to the undersigned at (571) 272-3218.

This matter is being referred to Publishing Division.

Frances Hicks
Petitions Examiner
Office of Petitions

ATTACHMENT: Form PTO-948

UNITED STATES PATENT AND TRADEMARK OFFICE

Commissioner for Patents
United States Patent and Trademark Office
P.O. Box 1450
Alexandria, VA 22313-1450
www.uspto.gov

ROBERT A. HUNTSMAN
5465 EAST TERRA LINDA WAY
NAMPA ID 83687-1515

COPY MAILED

FEB 0 7 2007

OFFICE OF PETITIONS

In re Application of	:	
Murphy, Cecil	:	
Application No. 10/929,639	:	ON PETITION
Filed: August 20, 2004	:	
Attorney Docket No. 20040801	:	

This is a decision on the petition under 37 C.F.R. § 1.137(b), filed August 1, 2005, to revive the above-identified application. In view of the allegation in the petition of the timely filing of a reply and the evidence submitted in support thereof, the petition is more properly a petition under 37 CFR 1.181 requesting the withdrawal of the holding of abandonment in the above-identified application and has been so treated. The Office regrets in the delay in action on the petitions.

The above-identified application was held abandoned for failure to timely reply to the Notice to File Corrected Application Papers mailed October 25, 2004. A Notice of Abandonment was mailed on July 12, 2005.

On January 27, 2006, the Office of Initial Patent Examination issued a "Withdrawal of Previously Sent Notice," which stated that the Notice of Abandonment was sent in error and returned the application to pending status.

In view of the January 27, 2006 correspondence, both the petition to withdraw the holding of abandonment and the petition under 37 CFR 1.137(b) are **DISMISSD AS MOOT.**

The Office sincerely apologizes for the inconvenience caused the petitioner in this matter.

This application is being returned to Technology Center AU 3724 for further examination on the merits.

Inquiries concerning this decision should be directed to the undersigned at (571) 272-3206. All other inquiries, including status, should be directed to the Technology Center.

Liana Walsh
Petitions Examiner
Office of Petitions

UNITED STATES PATENT AND TRADEMARK OFFICE

Commissioner for Patents
United States Patent and Trademark Office
P.O. Box 1450Alexandria, VA 22313-1450
www.uspto.gov

FITCH EVEN TABIN AND FLANNERY
120 SOUTH LA SALLE STREET
SUITE 1600
CHICAGO IL 60603-3406

COPY MAILED

JUN 21 2005

OFFICE OF PETITIONS

In re Application of
Thomas Haring et al.
Application No. 10/929,648
Filed: August 30, 2004
Attorney Docket No. 83402

: DECISION REFUSING STATUS
: UNDER 37 CFR 1.47(a)

This is in response to the petition filed under 37 CFR 1.47(a) on May 2, 2005.

The petition is **DISMISSED**.

Rule 47 applicant is given TWO MONTHS from the mailing date of this decision to reply, correcting the below-noted deficiencies. Any reply should be entitled "Request for Reconsideration of Petition Under 37 CFR 1.47(a)," and should only address the deficiencies noted below, except that the reply may include an oath or declaration executed by the non-signing inventor. **FAILURE TO RESPOND WILL RESULT IN ABANDONMENT OF THE APPLICATION**. Extensions of time may be obtained in accordance with 37 CFR 1.136(a).

The above-identified application was filed on August 30, 2004, without an executed oath or declaration. Accordingly, on October 29, 2004, a "Notice To File Missing Parts Of Nonprovisional Application" ("Notice To File Missing Parts") was mailed, requiring, *inter alia*, an executed oath or declaration in compliance with 37 CFR 1.63 and a surcharge for its late filing.

In response, the instant petition and four month extension of time request was filed. Petitioner additionally submitted, a declaration and power of attorney by joint inventors Thomas Haring, Jochen Kerres and Martin Hein on behalf of themselves and on behalf of non-signing joint inventors Vladimir Linkov, Andreas Ullrich, Chy-Ming Tang and Wei Zhang.

The petition states that "it is believed that all co-inventors had a copy of the application and declaration since on or about August 30, 2004 and have refused to sign".

A grantable petition under 37 CFR 1.47(a) requires:

(1) proof that the non-signing inventor cannot be reached or located,

notwithstanding diligent effort, or refuses to sign the oath or declaration after having been presented with the application papers (specification, claims and drawings);

(2) an acceptable oath or declaration in compliance with 35 U.S.C. §§ 115 and 116;

(3) the petition fee;

(4) a statement of the last known address of the non-signing inventor.

The petition lacks item (1). In regards to item (1), aside from petitioner's bald assertion that all the inventors had a copy of the application and declaration, petitioners have not submitted sufficient evidence to prove that a copy of the application was sent or given to the non-signing inventors. Petitioners must show proof that a copy of the application (specification including claims, drawings, if any, and the Declaration) were sent or given to the non-signing inventors for review.[1] Petitioners should provide a copy of the cover letter transmitting the application papers to the non-signing inventor or details given in an affidavit or declaration of facts by a person having first hand knowledge of the details.

Petitioners must also present proof that the non-signing inventors refuse to sign the declaration. If there is a written refusal, a copy of the written refusal should be submitted with any renewed petition. If the refusal was made orally to a person, then that person must provide details of the refusal in an affidavit or declaration of facts.

Further correspondence with respect to this matter should be addressed as follows:

By mail: Mail Stop Petitions
Commissioner for Patents
P.O. Box 1450
Alexandria, VA 22313-1450

By FAX: (703) 872-9306
Office of Petitions

Telephone inquiries concerning this matter may be directed to the undersigned Petitions Attorney at (571) 272-3212.

Patricia Faison-Ball

Patricia Faison-Ball
Senior Petitions Attorney
Office of Petitions

---

[1] MPEP 409.03(d).

UNITED STATES PATENT AND TRADEMARK OFFICE

Commissioner for Patents
United States Patent and Trademark Office
P.O. Box 1450
Alexandria, VA 22313-1450
www.uspto.gov

King & Partners, PLC
170 College Avenue
SUITE 230
HOLLAND MI 49423

COPY MAILED

MAY 09 2008

In re Application of	:	
Verespej et al.	:	
Application No. 10/929,663	:	DECISION ON PETITION
Filed: August 30, 2004	:	
Attorney Docket No. SCH-041011	:	

This is a decision on the petition under the unintentional provisions of 37 CFR 1.137(b), filed April 7, 2008, to revive the above-identified application.

The petition is **GRANTED**.

This application became abandoned for failure to timely pay the issue and publication fees on or before November 29, 2007, as required by the Notice of Allowance and Fee(s) Due, mailed August 29, 2007. Accordingly, the date of abandonment of this application is November 30, 2007.

The petition satisfies the requirements of 37 CFR 1.137(b) in that petitioner has supplied (1) the reply in the form of payment of the issue fee of $1440 and the publication fee of $300, (2) the petition fee of $1540; and (3) a proper statement of unintentional delay.

Telephone inquiries concerning this decision should be directed to Ramesh Krishnamurthy at (571) 272 - 4914.

The file does not indicate a change of address has been submitted, although the address given on the petition differs from the address of record. If appropriate, a change of address should be filed in accordance with MPEP 601.03. A courtesy copy of this decision is being mailed to the address given on the petition; however, the Office will mail all future correspondence solely to the address of record.

This application is being referred to the Office of Data Management for processing into a patent.

for
David Bucci
Petitions Examiner
Office of Petitions

CC: THE WATSON IP GROUP, PLC
3133 Highland Drive,
Suite 200,
Hudsonville, MI 49426

UNITED STATES PATENT AND TRADEMARK OFFICE

Commissioner for Patents
United States Patent and Trademark Office
P.O. Box 1450
Alexandria, VA 22313-1450
www.uspto.gov

NIKOLAI & MERSEREAU, P.A.
900 SECOND AVENUE SOUTH
SUITE 820
MINNEAPOLIS, MN 55402

COPY MAILED

APR 0 5 2006

OFFICE OF PETITIONS

In re Application of Chuang :
Application No. 10/929,708 :
Filing Date: August 30, 2004 :
Attorney Docket No. 20040686.ORI :

Decision on Petition

This is a decision in response to the "Petition to Accept Publication Fees" filed on February 6, 2006, which is being treated as a petition under 37 CFR 1.181. This is also a decision in response to the petition under 37 CFR 1.137(b) filed in the alternative on March 10, 2006.

The petition under 37 CFR 1.181 is **dismissed**.

The petition under 37 CFR 1.137(b) is **granted**.

The petition under 37 CFR 1.181:

The Notice of Allowance mailed April 13, 2005, required payment of the issue fee and the publication fee.

Petitioner chose not to pay the publication fee with the expectation the application would issue as a patent before it was published.

The petition to accept the publication fee was filed after the issuance of the patent was delayed.

If a Notice of Allowance requires payment of a publication fee, one must pay the fee within 3 months in order to avoid abandonment.

37 CFR 1.211(e) states,

> If an application is subject to publication under this section, the sum specified in the notice of allowance under § 1.311 will also include the publication fee which must be paid within three months from the date of mailing of the notice of allowance to avoid abandonment of the application. This three-month period is not extendable. If the application is not published under this section, the publication fee (if paid) will be refunded.

Since the publication fee was not timely paid, a petition to revive the application is necessary.

The petition under 37 CFR 1.137(b):

The application became abandoned on July 14, 2005, as the result of non-payment of the publication fee.

Petitioner has submitted the publication fee and has met the requirements of 37 CFR 1.137(b). Therefore, the petition is granted and the application is revived.

The Office of Publications will be informed of the instant decision and will take steps to issue the application as a patent.

Telephone inquiries regarding this communication should be directed to Petitions Attorney Steven Brantley at (571) 272-3203.

Charles Steven Brantley
Senior Petitions Attorney
Office of Petitions

UNITED STATES PATENT AND TRADEMARK OFFICE

UNITED STATES DEPARTMENT OF COMMERCE
United States Patent and Trademark Office
Address: COMMISSIONER FOR PATENTS
P.O. Box 1450
Alexandria, Virginia 22313-1450
www.uspto.gov

SCHWEGMAN, LUNDBERG & WOESSNER, P.A.
P.O. BOX 2938
MINNEAPOLIS, MN 55402

Mail Date: 04/30/2010

Applicant	: Robert J. Howard	: DECISION ON REQUEST FOR
Patent Number	: 7625475	: RECALCULATION of PATENT
Issue Date	: 12/01/2009	: TERM ADJUSTMENT IN VIEW
Application No	: 10/929,740	: OF WYETH AND NOTICE OF INTENT TO
Filed	: 08/30/2004	: ISSUE CERTIFICATE OF CORRECTION
		:

The Request for Recalculation is **GRANTED** to the extent indicated.

The patent term adjustment has been determined to be **1261** days. The USPTO will *sua sponte* issue a certificate of correction reflecting the amount of PTA days determined by the recalculation.

Prior to the issuance of the certificate of correction, the USPTO will afford patentee an opportunity to be heard and request reconsideration. Accordingly, patentee has **one month or thirty (30) days**, whichever is longer, to file a request for reconsideration of this patent term adjustment calculation. See 35 U.S.C. 154(b)(3)(B)(ii) and 37 CFR 1.322(a)(4). No extensions of time will be granted under 37 CFR 1.136.

Patentee should use document code PET.OP if electronically filing a request for reconsideration of this patent term adjustment calculation. The patentee must also include the information required by 37 CFR 1.705(b)(2) and the fee required by 37 CFR 1.18(e). If patentee does not file a timely request for reconsideration of this patent term adjustment calculation including the information required by 37 CFR 1.705(b)(2) and the fee required by 37 CFR 1.18(e), the USPTO will issue a certificate of correction reflecting the PTA determination noted above.

Patentee should be aware that in order to preserve the right to review in the United States District Court for the District of Columbia of the USPTO patent term adjustment determination, patentee must ensure that he or she also take the steps required under 35 U.S.C. 154(b)(4)(A) in a timely manner. Nothing in the request for recalculation should be construed as providing an alternative time frame for commencing a civil action under 35 U.S.C. 154(b)(4)(A).

Any questions concerning this decision should be directed to the Office of Patent Legal Administration at 571-272-7702.

UNITED STATES PATENT AND TRADEMARK OFFICE

Commissioner for Patents
United States Patent and Trademark Office
P.O. Box 1450
Alexandria, VA 22313-1450
www.uspto.gov

COOLEY GODWARD KRONISH LLP
ATTN: PATENT GROUP
SUITE 1100
777 – 6TH STREET, NW
WASHINGTON DC 20001

COPY MAILED

AUG 1 8 2008

In re Application of	:	
DESILVA, et al	:	
Application No. 10/929,771	:	DECISION ON PETITION
Filed: August 31, 2004	:	TO WITHDRAW
Attorney Docket No. PLAN-001/01US	:	FROM RECORD
	:	

This is a decision on the Request to Withdraw as attorney or agent of record under 37 C.F.R. § 1.36(b), filed July 18, 2008.

The request is **APPROVED**.

A grantable request to withdraw as attorney/agent of record must be signed by every attorney/agent seeking to withdraw or contain a clear indication that one attorney is signing on behalf of another/others. The Office requires the practitioner(s) requesting withdrawal to certify that he, she, or they have: (1) given reasonable notice to the client, prior to the expiration of the response period, that the practitioner(s) intends to withdraw from employment; (2) delivered to the client or a duly authorized representative of the client all papers and property (including funds) to which the client is entitled; and (3) notified the client of any responses that may be due and the time frame within which the client must respond, pursuant 37 CFR 10.40(c).

The request was signed by Frank Pietrantonio Jr. on behalf of all attorneys of record.

All attorneys of record have been withdrawn.

Applicant is reminded that there is no attorney of record at this time.

The correspondence address of record has been changed and the new correspondence address is the address indicated below.

Telephone inquiries concerning this decision should be directed to the undersigned at 571-272-6735.

Diane Goodwyn
Petitions Examiner
Office of Petitions

cc: PLANMATICS
1375 PICCARD DRIVE, SUITE 225
ROCKVILLE, MD 20850

UNITED STATES PATENT AND TRADEMARK OFFICE

Commissioner for Patents
United States Patent and Trademark Office
P.O. Box 1450
Alexandria, VA 22313-1450
www.uspto.gov

U.P. Peter Eng.
Wilson Songini Goodrich and Rosati
650 Page Mill Road
Palo Alto, CA 94304

COPY MAILED

AUG 0 1 2006

OFFICE OF PETITIONS

In re Application of	:	
Paul Huang	:	
Application No. 10/929,780	:	DECISION ON PETITION
Filed: August 31, 2004	:	TO WITHDRAW
Attorney Docket No. 31358-704.201	:	FROM RECORD
	:	

This is a decision on the Request to Withdraw as attorney or agent of record under 37 C.F.R. § 1.36(b), filed December 8, 2005.

The request is **NOT APPROVED**.

A grantable request to withdraw as attorney/agent of record must be signed by every attorney/agent seeking to withdraw or contain a clear indication that one attorney is signing on behalf of another/others. A request to withdraw will not be approved unless at least 30 (thirty) days would remain between the date of approval and the later of the expiration date of a time to file a response or the expiration date of the maximum time period which can be extended under 37 C.F.R. § 1.136(a).

The Office cannot approve the request at this time since the reasons provided do not meet any of the conditions under the mandatory or permissive categories enumerated in 37 CFR 10.40. Section 10.40 of Title 37 of the Code of Federal Regulation states, "[a] practitioner shall not withdraw from employment in a proceeding before the Office without permission from the Office[.]" More specifically, 37 CFR 10.40 states, "[i]f paragraph (b) of this section is not applicable, a practitioner may not request permission to withdraw in matter pending before the Office unless such request or such withdrawal is" for one the permissive reasons listed in 37 CFR 10.40(c). The reasons set forth in the request, **no longer a client**, do not meet any the conditions set forth in 37 CFR 10.40.

All future communications from the Office will continue to be directed to the above-listed address until otherwise notified by applicant.

Telephone inquiries concerning this decision should be directed to Terri Williams at 571-272-2991.

for David Bucci
Petitions Examiner
Office of Petitions

cc: MedRule Business Solutions Inc.
Attn: Paul Huang
790 E. Colorado Blvd., Suite 600
Pasadena, CA 91101

UNITED STATES PATENT AND TRADEMARK OFFICE

Commissioner for Patents
United States Patent and Trademark Office
P.O. Box 1450
Alexandria, VA 22313-1450
www.uspto.gov

WILSON SONSINI GOODRICH & ROSATI
650 PAGE MILL ROAD
PALO ALTO, CA 94304-1050

MAILED

MAR 03 2009

OFFICE OF PETITIONS

In re Application of	:	
HUANG, Paul	:	
Application No. 10/929,780	:	DECISION ON PETITION
Filed: August 31, 2004	:	TO WITHDRAW
Attorney Docket No. **31358-704.201**	:	FROM RECORD
	:	

This is a decision on the Request to Withdraw as attorney or agent of record under 37 C.F.R. § 1.36(b), filed December 22, 2008.

The request is **APPROVED**.

A grantable request to withdraw as attorney/agent of record must be signed by every attorney/agent seeking to withdraw or contain a clear indication that one attorney is signing on behalf of another/others. The Office requires the practitioner(s) requesting withdrawal to certify that he, she, or they have: (1) given reasonable notice to the client, prior to the expiration of the response period, that the practitioner(s) intends to withdraw from employment; (2) delivered to the client or a duly authorized representative of the client all papers and property (including funds) to which the client is entitled; and (3) notified the client of any responses that may be due and the time frame within which the client must respond, pursuant 37 CFR 10.40(c).

The request was signed by U.P. Peter Eng on behalf of all attorneys of record who are associated with customer No. 21971. All attorneys/agents associated have been withdrawn. Applicant is reminded that there is no attorney of record at this time.

The request to change the correspondence address of record is not acceptable as the requested correspondence address is not that of: (1) the first named signing inventor; or (2) an intervening assignee of the entire interest under 37 C.F.R 3.71. All future communications from the Office will be directed to the first named signing inventor.

There are no outstanding office actions at this time.

Telephone inquiries concerning this decision should be directed to Michelle R. Eason at 571-272-4231.

Michelle R. Eason
Paralegal Specialist
Office of Petitions

cc: **PAUL HUANG**
385 E. GREEN STREET, #2609
PASADENA, CA 91101

cc: **MEDRULE BUSINESS SOLUTIONS, INC.**
c/o DR. LIONEL NG
2750 E. WASHINGTON BLVD.
SUITE 360
PASADENA, CA 91107

UNITED STATES PATENT AND TRADEMARK OFFICE

Commissioner for Patents
United States Patent and Trademark Office
P.O. Box 1450
Alexandria, VA 22313-1450
www.uspto.gov

REED SMITH LLP
SUITE 1400
3110 FAIRVIEW PARK DRIVE
FALLS CHURCH, VA 22042

MAILED

FEB 23 2009

OFFICE OF PETITIONS

In re Application of	:	
Kunihiko Toumura	:	
Application No. 10/929,795	:	DECISION GRANTING PETITION
Filed: August 31, 2004	:	UNDER 37 CFR 1.313(c)(2)
Attorney Docket No. NITT.0233	:	

This is a decision on the petition under 37 CFR 1.313(c)(2), filed February 19, 2009, to withdraw the above-identified application from issue after payment of the issue fee.

The petition is **GRANTED**.

The above-identified application is withdrawn from issue for consideration of a submission under 37 CFR 1.114 (request for continued examination). *See* 37 CFR 1.313(c)(2).

Petitioner is advised that the issue fee paid on February 5, 2009 cannot be refunded. If, however, this application is again allowed, petitioner may request that it be applied towards the issue fee required by the new Notice of Allowance.[1]

Telephone inquiries regarding this decision should be directed to undersigned at (571) 272-1642.

This application is being referred to Technology Center AU 2416 for processing of the request for continued examination under 37 CFR 1.114 and for consideration of the concurrently filed information disclosure statement.

/AMW/
April M. Wise
Petitions Examiner
Office of Petitions

---

[1] *The request to apply the issue fee to the new Notice may be satisfied by completing and returning the new Part B – Fee(s) Transmittal Form (along with any balance due at the time of submission). Petitioner is advised that the Issue Fee Transmittal Form must be completed and timely submitted to avoid abandonment of the application.*

UNITED STATES PATENT AND TRADEMARK OFFICE

UNITED STATES DEPARTMENT OF COMMERCE
United States Patent and Trademark Office
Address: COMMISSIONER FOR PATENTS
P.O. Box 1450
Alexandria, Virginia 22313-1450
www.uspto.gov

Shapiro Cohen
P.O. Box 13002
Kanata, ON K2K 0E2
CANADA

Mail Date: 07/14/2010

Applicant	: Vyacheslav L. Zavadsky	: DECISION ON REQUEST FOR
Patent Number	: 7643665	: RECALCULATION of PATENT
Issue Date	: 01/05/2010	: TERM ADJUSTMENT IN VIEW
Application No	: 10/929,798	: OF WYETH AND NOTICE OF INTENT TO
Filed	: 08/31/2004	: ISSUE CERTIFICATE OF CORRECTION
		:

The Request for Recalculation is **GRANTED** to the extent indicated.

The patent term adjustment has been determined to be **1121** days. The USPTO will *sua sponte* issue a certificate of correction reflecting the amount of PTA days determined by the recalculation.

Prior to the issuance of the certificate of correction, the USPTO will afford patentee an opportunity to be heard and request reconsideration. Accordingly, patentee has **one month or thirty (30) days**, whichever is longer, to file a request for reconsideration of this patent term adjustment calculation. See 35 U.S.C. 154(b)(3)(B)(ii) and 37 CFR 1.322(a)(4). No extensions of time will be granted under 37 CFR 1.136.

Patentee should use document code PET.OP if electronically filing a request for reconsideration of this patent term adjustment calculation. The patentee must also include the information required by 37 CFR 1.705(b)(2) and the fee required by 37 CFR 1.18(e). If patentee does not file a timely request for reconsideration of this patent term adjustment calculation including the information required by 37 CFR 1.705(b)(2) and the fee required by 37 CFR 1.18(e), the USPTO will issue a certificate of correction reflecting the PTA determination noted above.

Patentee should be aware that in order to preserve the right to review in the United States District Court for the District of Columbia of the USPTO patent term adjustment determination, patentee must ensure that he or she also take the steps required under 35 U.S.C. 154(b)(4)(A) in a timely manner. Nothing in the request for recalculation should be construed as providing an alternative time frame for commencing a civil action under 35 U.S.C. 154(b)(4)(A).

Any questions concerning this decision should be directed to the Office of Patent Legal Administration at 571-272-7702.

UNITED STATES PATENT AND TRADEMARK OFFICE

Commissioner for Patents
United States Patent and Trademark Office
P.O. Box 1450
Alexandria, VA 22313-1450
www.uspto.gov

CARLSON, GASKEY & OLDS, P.C.
400 WEST MAPLE ROAD
SUITE 350
BIRMINGHAM MI 48009

MAILED
FROM DIRECTOR'S OFFICE

SEP 21 2007

TECHNOLOGY CENTER 3600

In re Application of:

Oncina et al

ON PETITION TO WITHDRAW HOLDING OF NON-RESPONSIVE REPLY UNDER 37 CFR 1.181

Appl. No. 10/929,803
Filed: August 30, 2004
For: ACTIVE THRUST MANAGEMENT SYSTEM

This is a decision on Applicant's Petition under 37 CFR 1.181 filed on November 22, 2006 to withdrawn the holding of non-responsive reply in miscellaneous letter dated November 13, 2006.

The Petition is **GRANTED.**

A review of the record indicates that on September 7, 2006 the applicant made an attempt to respond to a non-final office action dated June 7, 2006. On November 13, 2006, the examiner held, in a miscellaneous letter, that the amendment was non-responsive in that it failed to provide the correct claim status identifiers. The letter did not give the applicant a period of time to correct the deficiency.

The applicant's petition alleges that the response filed on September 7, 2006 was fully responsive and represented a *bona fide* attempt to advance the application. The applicant argues that, in view of the *bona fide* attempt, a period of time should have been given to supply the omission.

A review of the record shows that the applicant's response file on September 7, 2006 was non-compliant, yet indeed represented a *bona fide* attempt to advance prosecution on the merits. Accordingly, and as per 37 CFR 1.135 (c), the miscellaneous letter holding that the amendment was non-responsive failed to properly give a new time period for reply under §1.134 to supply the omission. The miscellaneous action dated November 9, 2006 is hereby VACATED.

SUMMARY: The Petition is **GRANTED.**

The application will be returned to the examiner for immediate action responding to the Supplemental Amendment dated December 6, 2006, which corrected the deficiency. Additionally, the file is being forwarded to the Head Supervisory Applications Examiner for consideration of the petition to refund the extension fee paid by the applicant on December 6, 2006.

Any questions regarding this decision should be directed to Richard Ridley at 571-272-6917.

Kathy Matecki

Kathy Matecki
Director
Technology Center 3600
571-272-6951

Zimmer, Marc

From: Newsome, Lamonte
Sent: Thursday, June 04, 2009 4:49 PM
To: Zimmer, Marc
Subject: 10929810

Paper No.: _____

DATE : 6/4/09

TO SPE OF : ART UNIT 1796

SUBJECT : Request for Certificate of Correction for Appl. No.: 10929810 Patent No.: 7252862 B2

Please respond to this request for a certificate of correction within 7 days.

FOR IFW FILES:

Please review the requested changes/corrections as shown in the **COCIN** document(s) in the IFW application image. No new matter should be introduced, nor should the scope or meaning of the claims be changed.

Please complete the response (see below) and forward the completed response to scanning using document code **COCX**.

FOR PAPER FILES:

Please review the requested changes/corrections as shown in the attached certificate of correction. Please complete this form (see below) and forward it with the file to:

Certificates of Correction Branch (CofC)
South Tower - 9A22
Palm Location 7580
You can fax the Directors/SPE response to 571-270-9990

LAMONTE

NEWSOME

Certificates of

Correction Branch

703-308-9390 ext. 112

Thank You For Your Assistance

The request for issuing the above-identified correction(s) is hereby:
Note your decision on the appropriate box.

☒ **Approved** — **All** changes apply.

☐ **Approved in Part** — Specify below which changes **do**

James J. Seidleck SPE 1796

6/21/09

not apply.

☐ **Denied** State the reasons for denial below.

Comments:

_____

_____

_____

_____

_____

_____

SPE
Art Unit 1796

UNITED STATES PATENT AND TRADEMARK OFFICE

UNITED STATES DEPARTMENT OF COMMERCE
United States Patent and Trademark Office
Address: COMMISSIONER FOR PATENTS
P.O. Box 1450
Alexandria, Virginia 22313-1450
www.uspto.gov

HONEYWELL INTERNATIONAL INC.
PATENT SERVICES
101 COLUMBIA ROAD
P O BOX 2245
MORRISTOWN, NJ 07962-2245

Mail Date: 04/21/2010

Applicant	: Doug M. Weed	: DECISION ON REQUEST FOR
Patent Number	: 7606665	: RECALCULATION of PATENT
Issue Date	: 10/20/2009	: TERM ADJUSTMENT IN VIEW
Appliction No	: 10/929,825	: OF WYETH AND NOTICE OF INTENT TO
Filed	: 08/30/2004	: ISSUE CERTIFICATE OF CORRECTION
		:

The Request for Recalculation is **GRANTED** to the extent indicated.

The patent term adjustment has been determined to be **1451** days. The USPTO will *sua sponte* issue a certificate of correction reflecting the amount of PTA days determined by the recalculation.

Prior to the issuance of the certificate of correction, the USPTO will afford patentee an opportunity to be heard and request reconsideration. Accordingly, patentee has **one month or thirty (30) days**, whichever is longer, to file a request for reconsideration of this patent term adjustment calculation. See 35 U.S.C. 154(b)(3)(B)(ii) and 37 CFR 1.322(a)(4). No extensions of time will be granted under 37 CFR 1.136.

Patentee should use document code PET.OP if electronically filing a request for reconsideration of this patent term adjustment calculation. The patentee must also include the information required by 37 CFR 1.705(b)(2) and the fee required by 37 CFR 1.18(e). If patentee does not file a timely request for reconsideration of this patent term adjustment calculation including the information required by 37 CFR 1.705(b)(2) and the fee required by 37 CFR 1.18(e), the USPTO will issue a certificate of correction reflecting the PTA determination noted above.

Patentee should be aware that in order to preserve the right to review in the United States District Court for the District of Columbia of the USPTO patent term adjustment determination, patentee must ensure that he or she also take the steps required under 35 U.S.C. 154(b)(4)(A) in a timely manner. Nothing in the request for recalculation should be construed as providing an alternative time frame for commencing a civil action under 35 U.S.C. 154(b)(4)(A).

Any questions concerning this decision should be directed to the Office of Patent Legal Administration at 571-272-7702.

SCAN! **Please forward case and paper to address shown below.**

SPE RESPONSE FOR CERTIFICATE OF CORRECTION

Paper No.: _____

DATE : 6/1/07

TO SPE OF : ART UNIT 2817

SUBJECT : Request for Certificate of Correction for Appl. No.: 10/929843 Patent No.: 7199685

Please respond to this request for a certificate of correction within 7 days.

Please review the requested changes/corrections as shown in the attached certificate of correction. Please complete this form (see below) and forward it with the file to:

Certificates of Correction Branch (CofC)
South Tower - 9A22
Palm Location 7580

HENRY RANDALL
Certificates of Correction Branch
703-308-9390 ext. _____

Thank You For Your Assistance

The request for issuing the above-identified correction(s) is hereby:

Note your decision on the appropriate box.

- ☒ Approved — All changes apply.
- ☐ Approved in Part — Specify below which changes do not apply.
- ☐ Denied — State the reasons for denial below.

Comments: _____

SPE

2817
Art Unit

SCAN! **Please forward case and paper to address shown below.**

SPE RESPONSE FOR CERTIFICATE OF CORRECTION

Paper No.: _____

DATE : 7/10/08

TO SPE OF : ART UNIT 2817 Kimberly Glenn

SUBJECT : Request for Certificate of Correction for Appl. No.: 10/929843 Patent No.: 7199695

Please respond to this request for a certificate of correction within 7 days.

Please review the requested changes/corrections as shown in the attached certificate of correction. Please complete this form (see below) and forward it with the file to:

Certificates of Correction Branch (CofC)
South Tower - 9A22
Palm Location 7580

HENRY RANDALL
Certificates of Correction Branch
703-308-9390 ext. _____

Thank You For Your Assistance

The request for issuing the above-identified correction(s) is hereby:

Note your decision on the appropriate box.

- [x] Approved — All changes apply.
- [ ] Approved in Part — Specify below which changes do not apply.
- [ ] Denied — State the reasons for denial below.

Comments: _____

SPE

2817
Art Unit

UNITED STATES PATENT AND TRADEMARK OFFICE

Commissioner for Patents
United States Patent and Trademark Office
P.O. Box 1450
Alexandria, VA 22313-1450
www.uspto.gov

COPY MAILED
SEP 24 2007
OFFICE OF PETITIONS

KLEIN, O' NEILL & SINGH, LLP
43 CORPORATE PARK
SUITE 204
IRVINE, CA 92606

In re Application of
Daryl R. MILLER, et al
Application No. 10/929,858
Filed: August 30, 2004
Attorney Docket No. 904-06-PA-T

DECISION ON PETITION
TO WITHDRAW
FROM RECORD

This is a decision on the Request to Withdraw as attorney or agent of record under 37 C.F.R. § 1.36(b), filed May 25, 2007.

The request is **APPROVED**.

A grantable request to withdraw as attorney/agent of record must be signed by every attorney/agent seeking to withdraw or contain a clear indication that one attorney is signing on behalf of another/others. A request to withdraw will not be approved unless at least 30 (thirty) days would remain between the date of approval and the later of the expiration date of a time to file a response or the expiration date of the maximum time period which can be extended under 37 C.F.R. § 1.136(a).

The request was signed by Tejinder Singh on behalf of all attorneys of record.

All attorneys/agents of record have been withdrawn.

Applicant is reminded that there is no attorney of record at this time.

The request to change the correspondence of record is not acceptable as the requested correspondence address is not that of: (1) the first named signing inventor; or (2) an intervening assignee of the entire interest under 37 C.F.R 3.71. All future communications from the Office will be directed to the first named signing inventor at the first copied address below until otherwise properly notified by the applicant.

In order to request or take action in a patent matter, the assignee must establish its ownership of the patent to the satisfaction of the Director. In this regard, a Statement under 37 CFR 3.73(b) must have either: (i) documentary evidence of a chain of title from the original owner to the assignee (*e.g.*, copy of an executed assignment), and a statement affirming that the documentary evidence of the chain of title from the original owner to the assignee was or concurrently is being submitted for recordation pursuant to § 3.11; or (ii) a statement specifying where documentary evidence of a chain of title from the original owner to the assignee is recorded in the assignment records of the Office (*e.g.*, reel and frame number).

There are no Office actions pending at the present time.

Telephone inquiries concerning this decision should be directed to Diane Goodwyn at 571-272-6735.

April Wise
Petitions Examiner
Office of Petitions

cc: DARYL R. MILLER
7 VIA ARRIBO
RANCHO SANTA MARGARIA, CA 92688

cc: RUTAN & TUCKER
611 ANTON BLVD., SUITE 1400
COSTA MESA CA

UNITED STATES PATENT AND TRADEMARK OFFICE

UNITED STATES DEPARTMENT OF COMMERCE
United States Patent and Trademark Office
Address: COMMISSIONER FOR PATENTS
P.O. Box 1450
Alexandria, Virginia 22313-1450
www.uspto.gov

APPLICATION NUMBER	FILING OR 371 (c) DATE	FIRST NAMED APPLICANT	ATTY. DOCKET NO./TITLE
10/929,858	08/30/2004	Daryl R. Miller	

CONFIRMATION NO. 5711

OC000000025755240

22145
KLEIN, O'NEILL & SINGH, LLP
43 CORPORATE PARK
SUITE 204
IRVINE, CA 92606

Date Mailed: 09/11/2007

NOTICE REGARDING CHANGE OF POWER OF ATTORNEY

This is in response to the Power of Attorney filed 05/25/2007.

- The withdrawal as attorney in this application has been accepted. Future correspondence will be mailed to the new address of record. 37 CFR 1.33.

Office of Initial Patent Examination (571) 272-4000, or 1-800-PTO-9199
FORMER ATTORNEY/AGENT COPY

UNITED STATES PATENT AND TRADEMARK OFFICE

Commissioner for Patents
United States Patent and Trademark Office
P.O. Box 1450
Alexandria, VA 22313-1450
www.uspto.gov

COPY MAILED

MAR 0 6 2007

OFFICE OF PETITIONS

DUANE MORRIS LLP
IP DEPARTMENT
30 SOUTH 17TH STREET
PHILADELPHIA PA 19103-4196

In re Application of
John Gilbert Thayer, et al.
Application No. 10/929,870
Filed: August 30, 2004
Attorney Docket No. H1799-00262

DECISION ON PETITION TO WITHDRAW FROM RECORD

This is a decision on the Request to Withdraw as attorney or agent of record under 37 C.F.R. § 1.36(b) filed October 3, 2006.

The request is **NOT APPROVED**.

A grantable request to withdraw as attorney/agent of record must be signed by every attorney/agent seeking to withdraw or contain a clear indication that one attorney is signing on behalf of another/others. A request to withdraw will not be approved unless at least 30 (thirty) days would remain between the date of approval and the later of the expiration date of a time to file a response or the expiration date of the maximum time period which can be extended under 37 C.F.R. § 1.136(a).

The Office cannot approve the request at this time since the reasons provided do not meet any of the conditions under the mandatory or permissive categories enumerated in 37 CFR 10.40. Section 10.40 of Title 37 of the Code of Federal Regulation states, "[a] practitioner shall not withdraw from employment in a proceeding before the Office without permission from the Office [.]" More specifically, 37 CFR 10.40 states, "[i]f paragraph (b) of this section is not applicable, a practitioner may not request permission to withdraw in matter pending before the Office unless such request or such withdrawal is" for one the permissive reasons listed in 37 CFR 10.40(c). The reasons set forth in the request, "the assignee of record has requested the file be transferred", do not meet any the conditions set forth in 37 CFR 10.40.

In order to request or take action in a patent matter, the assignee must establish its ownership of the patent to the satisfaction of the Director. In this regard, a Statement under 37 CFR 3.73(b) must have either: (i) documentary evidence of a chain of title from the original owner to the assignee (*e.g.*, copy of an executed assignment), and a statement affirming that the documentary evidence of the chain of title from the original owner to the assignee was or concurrently is being

submitted for recordation pursuant to § 3.11; or (ii) a statement specifying where documentary evidence of a chain of title from the original owner to the assignee is recorded in the assignment records of the Office (*e.g.*, reel and frame number).

All future communications from the Office will continue to be directed to the above-listed address until otherwise notified by applicant.

Telephone inquiries concerning this decision should be directed to undersigned at 571-272-1642.

April M. Wise
Petitions Examiner
Office of Petitions

cc: CHRISTOPHER B. AUSTIN
MICHAEL BEST & FRIEDRICH, LLP
100 E. WISCONSIN AVENUE
SUITE 3300
MILWAUKEE, WI 53202

UNITED STATES PATENT AND TRADEMARK OFFICE

Commissioner for Patents
United States Patent and Trademark Office
P.O. Box 1450
Alexandria, VA 22313-1450
www.uspto.gov

DUANE MORRIS LLP
IP DEPARTMENT
30 SOUTH 17TH STREET
PHILADELPHIA PA 19103-4196

COPY MAILED

JAN 10 2007

OFFICE OF PETITIONS

In re Application of	:	
John G. Thayer, et al.	:	
Application No. 10/929,871	:	DECISION ON PETITION
Filed: August 30, 2004	:	TO WITHDRAW
Attorney Docket No. H1799-00224	:	FROM RECORD
	:	

This is a decision on the Request to Withdraw as attorney or agent of record under 37 C.F.R. § 1.36(b) filed October 3, 2006.

The request is **NOT APPROVED**.

A grantable request to withdraw as attorney/agent of record must be signed by every attorney/agent seeking to withdraw or contain a clear indication that one attorney is signing on behalf of another/others. A request to withdraw will not be approved unless at least 30 (thirty) days would remain between the date of approval and the later of the expiration date of a time to file a response or the expiration date of the maximum time period which can be extended under 37 C.F.R. § 1.136(a).

The Office cannot approve the request at this time since the reasons provided do not meet any of the conditions under the mandatory or permissive categories enumerated in 37 CFR 10.40. Section 10.40 of Title 37 of the Code of Federal Regulation states, "[a] practitioner shall not withdraw from employment in a proceeding before the Office without permission from the Office [.]" More specifically, 37 CFR 10.40 states, "[i]f paragraph (b) of this section is not applicable, a practitioner may not request permission to withdraw in matter pending before the Office unless such request or such withdrawal is" for one the permissive reasons listed in 37 CFR 10.40(c). The reasons set forth in the request, "the assignee of record has requested that the file be transferred", does not meet any of the conditions set forth in 37 CFR 10.40.

In order to request or take action in a patent matter, the assignee must establish its ownership of the patent to the satisfaction of the Director. In this regard, a Statement under 37 CFR 3.73(b) must have either: (i) documentary evidence of a chain of title from the original owner to the assignee (*e.g.*, copy of an executed assignment), and a statement affirming that the documentary evidence of the chain of title from the original owner to the assignee was or concurrently is being

submitted for recordation pursuant to § 3.11; or (ii) a statement specifying where documentary evidence of a chain of title from the original owner to the assignee is recorded in the assignment records of the Office (*e.g.*, reel and frame number).

All future communications from the Office will continue to be directed to the above-listed address until otherwise notified by applicant.

There is an outstanding Office action mailed October 18, 2006 that requires a reply by the applicant.

Telephone inquiries concerning this decision should be directed to undersigned at 571-272-1642.

April M. Wise
Petitions Examiner
Office of Petitions

cc: CHRISTOPHER B. AUSTIN
MICHAEL BEST & FRIEDRICH, LLP
100 E. WISCONSIN AVENUE
SUITE 3300
MILWAUKEE, WI 53202

UNITED STATES PATENT AND TRADEMARK OFFICE

Commissioner for Patents
United States Patent and Trademark Office
P.O. Box 1450
Alexandria, VA 22313-1450
www.uspto.gov

CHARLES N.J. RUGGIERO, ESQ.
OHLANDT, GREELEY, RUGGIERO & PERLE, L.L.P.
10TH FLOOR
ONE LANDMARK SQUARE
STAMFORD CT 06901-2682

COPY MAILED
APR 17 2008
OFFICE OF PETITIONS

In re Application of	:	
Vito James **Carlucci**	:	
Application No. 10/929,880	:	DECISION ON PETITION
Filed: August 30, 2004	:	
Attorney Docket No. 884.0223USU	:	

This is a decision on the petition under the unintentional provisions of 37 CFR 1.137(b), filed December 19, 2007, to revive the above-identified application.

The petition is **GRANTED**.

This application became abandoned for failure to reply in a timely manner to the Non-final Office action mailed May 02, 2007, which set a shortened statutory period for reply of three (3) months. No extension of time under the provisions of 37 CFR 1.136(a) was obtained. Accordingly, the above-identified application became abandoned on August 03, 2007.

The petition satisfies the requirements of 37 CFR 1.137(b) in that petitioner has supplied (1) the reply in the form of an amendment; (2) the petition fee of $1,540.00 and (3) a proper statement of unintentional delay. Accordingly, the reply to the Non-final Office action of December 19, 2007 is accepted as having been unintentionally delayed.

It is not apparent whether the person signing the statement of unintentional delay was in a position to have firsthand or direct knowledge of the facts and circumstances of the delay at issue. Nevertheless, such statement is being treated as having been made as the result of a reasonable inquiry into the facts and circumstances of such delay. See 37 CFR 10.18(b) and Changes to Patent Practice and Procedure; Final Rule Notice, 62 Fed. Reg. 53131, 53178 (October 10, 1997), 1203 Off. Gaz. Pat. Office 63, 103 (October 21, 1997). In the event that such an inquiry has not been made, petitioner must make such an inquiry. If such inquiry results in the discovery that it is not correct that the entire delay in filing the required reply from the due date for the reply until the filing of a grantable petition pursuant to 37 CFR 1.137(b) was unintentional, petitioner must notify the Office.

There is no indication that the person signing the petition was ever given a power of attorney to prosecute the application. If the person signing the petition desires to receive future correspondence regarding this application, the appropriate power of attorney document must be submitted. While a courtesy copy of this decision is being mailed to the person signing the petition, all future correspondence will be directed to the address currently of record until appropriate instructions are received.

The application file does not indicate a change of address has been filed in this case, although the address given on the petition differs from the address of record. A change of address should be filed in this case in accordance with MPEP 601.03. A courtesy copy of this decision is being mailed to the address noted on the petition. However, until otherwise instructed, all future correspondence regarding this application will be mailed solely to the address of record.

Telephone inquiries concerning this decision should be directed to Thuy Pardo at (571) 272-6052 or in her absence, the undersigned at (571)272-7099.

This application is being referred to Technology Center AU 1792 for appropriate action by the Examiner in the normal course of business on the reply received

Christopher Bottiglieri

for David A. Bucci
Petitions Examiner
Office of Petitions

cc:
LAWRENCE CRUZ
CONAIR CPRPORATION- CHIEF PATENT COUNSEL
1 CUMMINGS PL RD.
STAMFORD CT 06902

UNITED STATES PATENT AND TRADEMARK OFFICE

Commissioner for Patents
United States Patent and Trademark Office
P.O. Box 1450
Alexandria, VA 22313-1450
www.uspto.gov

PATTERSON & SHERIDAN, LLP
3040 POST OAK BOULEVARD, SUITE 1500
HOUSTON TX 77056

COPY MAILED

APR 13 2007

OFFICE OF PETITIONS

In re Application of	:	
Rajagopalan, et al.	:	
Application No. 10/929,884	:	DECISION ON PETITION
Filed: August 30, 2004	:	UNDER 37 CFR 1.78(a)(3)
Attorney Docket No. 008583/02/DSM/LOW K	:	

This is a decision on the petition under 37 CFR 1.78(a)(3), filed December 12, 2006, to accept an unintentionally delayed claim under 35 U.S.C. § 120 for the benefit of priority to the prior-filed nonprovisional application set forth in the amendment filed with the petition.

The petition is **GRANTED**.

A petition for acceptance of a claim for late priority under 37 CFR 1.78(a)(3) is only applicable to those applications filed on or after November 29, 2000. Further, the petition is appropriate only after the expiration of the period specified in 37 CFR 1.78(a)(2)(ii). In addition, the petition under 37 CFR 1.78(a)(3) must be accompanied by:

(1) the reference required by 35 U.S.C. § 120 and 37 CFR 1.78(a)(2)(i) of the prior-filed application, unless previously submitted;
(2) the surcharge set forth in § 1.17(t); and
(3) a statement that the entire delay between the date the claim was due under 37 CFR 1.78(a)(2)(ii) and the date the claim was filed was unintentional. The Director may require additional information where there is a question whether the delay was unintentional.

Pursuant to petitioner's authorization, deposit account no. 20-0782 will be charged the required $1,370.00 surcharge.

All of the above requirements having been satisfied, the late claim for priority under 35 U.S.C. § 120 is accepted as being unintentionally delayed.

The granting of the petition to accept the delayed benefit claim to the prior-filed application under 37 CFR 1.78(a)(3) should not be construed as meaning that this application is entitled

to the benefit of the prior-filed application. In order for this application to be entitled to the benefit of the prior-filed application, all other requirements under 35 U.S.C. § 120 and 37 CFR 1.78(a)(1) and (a)(2) must be met. Similarly, the fact that the corrected Filing Receipt accompanying this decision on petition includes the prior-filed application should not be construed as meaning that applicant is entitled to the claim for benefit of priority to the prior-filed application noted thereon. Accordingly, the examiner will, in due course, consider this benefit claim and determine whether the application is entitled to the benefit of the earlier filing date.

A corrected Filing Receipt, which includes the priority claim to the prior-filed nonprovisional application, accompanies this decision on petition.

Any inquiries concerning this decision may be directed to the undersigned at (571) 272-3230. All other inquiries concerning either the examination procedures or status of the application should be directed to the Technology Center.

This application is being forwarded to Technology Center Art Unit 2823 for consideration by the examiner of applicant's entitlement to claim benefit of priority under 35 U.S.C. § 120 to the prior-filed application.

Shirene Willis Brantley

Shirene Willis Brantley
Senior Petitions Attorney
Office of Petitions

ATTACHMENT: Corrected Filing Receipt

UNITED STATES PATENT AND TRADEMARK OFFICE

UNITED STATES DEPARTMENT OF COMMERCE
United States Patent and Trademark Office
Address: COMMISSIONER FOR PATENTS
P.O. Box 1450
Alexandria, Virginia 22313-1450
www.uspto.gov

APPL NO.	FILING OR 371(c) DATE	ART UNIT	FIL FEE REC'D	ATTY.DOCKET NO	TOT CLMS	IND CLMS
10/929,884	08/30/2004	2823	1882	008583/02/DSM/LOW K	47	5

CONFIRMATION NO. 6196

CORRECTED FILING RECEIPT

OC000000023287925

44257
PATTERSON & SHERIDAN, LLP
3040 POST OAK BOULEVARD, SUITE 1500
HOUSTON, TX 77056

Date Mailed: 04/06/2007

Receipt is acknowledged of this regular Patent Application. It will be considered in its order and you will be notified as to the results of the examination. Be sure to provide the U.S. APPLICATION NUMBER, FILING DATE, NAME OF APPLICANT, and TITLE OF INVENTION when inquiring about this application. Fees transmitted by check or draft are subject to collection. Please verify the accuracy of the data presented on this receipt. **If an error is noted on this Filing Receipt, please mail to the Commissioner for Patents P.O. Box 1450 Alexandria Va 22313-1450. Please provide a copy of this Filing Receipt with the changes noted thereon. If you received a "Notice to File Missing Parts" for this application, please submit any corrections to this Filing Receipt with your reply to the Notice. When the USPTO processes the reply to the Notice, the USPTO will generate another Filing Receipt incorporating the requested corrections (if appropriate).**

Applicant(s)

Nagarajan Rajagopalan, Santa Clara, CA;
Meiyee Shek, Mountain View, CA;
Albert Lee, Cupertino, CA;
Annamalai Lakshmanan, Santa Clara, CA;
Li-Qun Xia, Santa Clara, CA;
Zhenjiang Cui, San Jose, CA;

Assignment For Published Patent Application

APPLIED MATERIALS, INC.

Power of Attorney:

Robert Mulcahy--25436
Peter Sgarbossa--25610
Keith Tackett--32008
Donald Verplancken--33217
Raymond Moser Jr--34682
James Wilson--35412
Raymond Kwong--37165
Joseph Bach--37771
Barden Patterson--37906
Anca Gheorghiu--44120

Domestic Priority data as claimed by applicant

This application is a CIP of 10/828,023 04/19/2004

Foreign Applications

If Required, Foreign Filing License Granted: 10/25/2004

The country code and number of your priority application, to be used for filing abroad under the Paris

Convention, is US10/929,884

Projected Publication Date: Not Applicable

Non-Publication Request: No

Early Publication Request: No

Title

ADHESION IMPROVEMENT FOR LOW K DIELECTRICS TO CONDUCTIVE MATERIALS

Preliminary Class

438

PROTECTING YOUR INVENTION OUTSIDE THE UNITED STATES

Since the rights granted by a U.S. patent extend only throughout the territory of the United States and have no effect in a foreign country, an inventor who wishes patent protection in another country must apply for a patent in a specific country or in regional patent offices. Applicants may wish to consider the filing of an international application under the Patent Cooperation Treaty (PCT). An international (PCT) application generally has the same effect as a regular national patent application in each PCT-member country. The PCT process **simplifies** the filing of patent applications on the same invention in member countries, but **does not result** in a grant of "an international patent" and does not eliminate the need of applicants to file additional documents and fees in countries where patent protection is desired.

Almost every country has its own patent law, and a person desiring a patent in a particular country must make an application for patent in that country in accordance with its particular laws. Since the laws of many countries differ in various respects from the patent law of the United States, applicants are advised to seek guidance from specific foreign countries to ensure that patent rights are not lost prematurely.

Applicants also are advised that in the case of inventions made in the United States, the Director of the USPTO must issue a license before applicants can apply for a patent in a foreign country. The filing of a U.S. patent application serves as a request for a foreign filing license. The application's filing receipt contains further information and guidance as to the status of applicant's license for foreign filing.

Applicants may wish to consult the USPTO booklet, "General Information Concerning Patents" (specifically, the section entitled "Treaties and Foreign Patents") for more information on timeframes and deadlines for filing foreign patent applications. The guide is available either by contacting the USPTO Contact Center at 800-786-9199, or it can be viewed on the USPTO website at http://www.uspto.gov/web/offices/pac/doc/general/index.html.

For information on preventing theft of your intellectual property (patents, trademarks and copyrights), you may wish to consult the U.S. Government website, http://www.stopfakes.gov. Part of a Department of Commerce initiative, this website includes self-help "toolkits" giving innovators guidance on how to protect intellectual property in specific countries such as China, Korea and Mexico. For questions regarding patent enforcement issues, applicants may call the U.S. Government hotline at 1-866-999-HALT (1-866-999-4158).

LICENSE FOR FOREIGN FILING UNDER
Title 35, United States Code, Section 184
Title 37, Code of Federal Regulations, 5.11 & 5.15

GRANTED

The applicant has been granted a license under 35 U.S.C. 184, if the phrase "IF REQUIRED, FOREIGN FILING LICENSE GRANTED" followed by a date appears on this form. Such licenses are issued in all applications where the conditions for issuance of a license have been met, regardless of whether or not a license may be required as set forth in 37 CFR 5.15. The scope and limitations of this license are set forth in 37 CFR 5.15(a) unless an earlier license has been issued under 37 CFR 5.15(b). The license is subject to revocation upon written notification. The date indicated is the effective date of the license, unless an earlier license of similar scope has been granted under 37 CFR 5.13 or 5.14.

This license is to be retained by the licensee and may be used at any time on or after the effective date thereof unless it is revoked. This license is automatically transferred to any related applications(s) filed under 37 CFR 1.53(d). This license is not retroactive.

The grant of a license does not in any way lessen the responsibility of a licensee for the security of the subject matter as imposed by any Government contract or the provisions of existing laws relating to espionage and the national security or the export of technical data. Licensees should apprise themselves of current regulations especially with respect to certain countries, of other agencies, particularly the Office of Defense Trade Controls, Department of State (with respect to Arms, Munitions and Implements of War (22 CFR 121-128)); the Bureau of Industry and Security, Department of Commerce (15 CFR parts 730-774); the Office of Foreign Assets Control, Department of Treasury (31 CFR Parts 500+) and the Department of Energy.

NOT GRANTED

No license under 35 U.S.C. 184 has been granted at this time, if the phrase "IF REQUIRED, FOREIGN FILING LICENSE GRANTED" DOES NOT appear on this form. Applicant may still petition for a license under 37 CFR 5.12, if a license is desired before the expiration of 6 months from the filing date of the application. If 6 months has lapsed from the filing date of this application and the licensee has not received any indication of a secrecy order under 35 U.S.C. 181, the licensee may foreign file the application pursuant to 37 CFR 5.15(b).

RECEIVED
CENTRAL FAX CENTER
FEB 05 2009

Seed IP

February 5, 2009

David V. Carlson
Telephone: (206) 694-4828
davec@SeedIP.com

Facsimile Transmission

To:	Office of Petitions
Fax No:	(571) 273-8300
Phone No:	
Re:	U.S. Patent No. 7,440,370
Seed IP Ref:	890050.502
No. of Pages:	13 (including this page)

If you do not receive all pages, please call Laura Hernandez at (206) 622-4900 or fax our office.

[X] Urgent [X] For Review [X] Please Confirm Receipt [ ] Please Reply ASAP

Seed Intellectual Property Law Group PLLC
address 701 Fifth Avenue
Suite 5400
Seattle, WA 98104
telephone 206.622.4900
facsimile 206.682.6031
website SeedIP.com

Attached:

1. Transmittal Form
2. Processing Fee Transmittal Form
3. Request Under 37 CFR 3.81(b) and Request for Reconsideration of Decision on Request for Certificate of Correction Under 37 CFR § 1.322 and/or 1.323
4. Copy of Decisions and Certificates of Correction Branch letter dated 12/05/08
5. Copy of Notice of Recordation of Assignment Document
6. Second Request for Certificate of Correction
7. Certificate of Correction

CONFIDENTIALITY NOTICE:
The information contained in this facsimile message is legally privileged and/or confidential information intended only for the use of the addressee named above. If you are not the intended recipient, you are hereby notified that any use, dissemination, distribution, or copying of this facsimile or its content is strictly prohibited. If you have received this facsimile in error, please immediately notify us by telephone and return the original facsimile message to us by mail or destroy it without making a copy. Thank you.

1324472_1.DOC

BEST AVAILABLE COPY

Best Available Copy

RECEIVED
CENTRAL FAX CENTER
FEB 05 2009

TRANSMITTAL FORM

(To be used for all correspondence after initial filing)

Application Number	10/929,894
Filing Date	August 30, 2004
First Named Inventor	Masashi Kuwahara
Art Unit	2627
Examiner Name	Thang V. Tran
Attorney Docket No.	890050.502

ENCLOSURES (*check all that apply*)

- [X] Fee Transmittal Form
  - [ ] Fee Attached
- [ ] Amendment/Response
  - [ ] After Final
  - [ ] Affidavits/declaration(s)
- [ ] Extension of Time Request
- [ ] Express Abandonment Request
- [ ] Information Disclosure Statement and Transmittal
- [ ] Cited References
- [ ] Certified Copy of Priority Document(s)
- [ ] Response to Missing Parts under 37 CFR 1.52 or 1.53
- [ ] Response to Missing Parts/Incomplete Application
- [ ] Drawing(s)
- [ ] Request for Corrected Filing Receipt
- [ ] Licensing-related Papers
- [ ] Petition
- [ ] Petition to Convert to a Provisional Application
- [ ] Power of Attorney, Revocation, Change of Correspondence Address
- [ ] Declaration
- [ ] Statement under 37 CFR 3.73(b)
- [ ] Terminal Disclaimer
- [ ] Request for Refund
- [ ] CD, Number of CD(s) _____
  - [ ] Landscape Table on CD
- [ ] After Allowance Communication to TC
- [ ] Appeal Communication to Board of Appeals and Interferences
- [ ] Appeal Communication to TC *(Appeal Notice, Brief, Reply Brief)*
- [ ] Proprietary Information
- [ ] Status Letter
- [X] Return Receipt Postcard
- [X] Other Enclosure(s) (*please identify below*):

Request Under 37 CFR 3.81(b) and Request for Reconsideration of Decision on Request for Certificate of Correction Under 37 CFR § 1.322 and/or 1.323 w/enclosures

Remarks

SIGNATURE OF APPLICANT, ATTORNEY, OR AGENT

Firm Name	Seed Intellectual Property Law Group PLLC	Customer Number	00500
Signature			
Printed Name	**David V. Carlson**		
Date	**February 5, 2009**	Reg. No.	**31,153**

CERTIFICATE OF TRANSMISSION/MAILING

I hereby certify that this correspondence is being facsimile transmitted to the USPTO or deposited with the United States Postal Service with sufficient postage as first class mail in an envelope addressed to: Commissioner for Patents, P.O. Box 1450, Alexandria, VA 22313-1450 on the date shown below.

Signature			
Typed or printed name	Laura C. Hernandez	Date	February 5, 2009

SEND TO: Commissioner for Patents, P.O. Box 1450, Alexandria, VA 22313-1450. 1324474_1.DOC

RECEIVED
CENTRAL FAX CENTER
FEB 05 2009

PROCESSING FEE Under 37 CFR 1.17(i) TRANSMITTAL

(Fees are subject to annual revision)

Send completed form to: Commissioner for Patents
P.O. Box 1450, Alexandria, VA 22313-1450

Application Number	10/929,894
Filing Date	August 30, 2004
First Named Inventor	Masashi Kuwahara
Art Unit	2627
Examiner Name	Thang V. Tran
Attorney Docket Number	890050.502

Enclosed is a paper filed under 37 CFR 3.81(b); 1.322 and/or 1.323 that requires a processing fee (37 CFR 1.17(i)).
Payment of $130 is enclosed.

This form should be included with the above-mentioned paper and faxed or mailed to the Office using the appropriate Mail Stop, if applicable. *For transmittal of petition fees under 37 CFR 1.17(f), (g), or (h), see form PTO/SB/17p.*

Payment of Fees (small entity amounts are NOT available for the processing fees)

- [x] The Commissioner is hereby authorized to charge the following fees to Deposit Account No. 19-1090:
  - [x] processing fee under 37 CFR 1.17(i)
  - [x] any deficiency of fees and credit of any overpayments
- [ ] Check in the amount of $____ is enclosed.
- [ ] Payment by credit card (Form PTO-2038 or equivalent enclosed). Do not provide credit card information on this form.

Processing Fees under 37 CFR 1.17(i): Fee $130 Fee Code 1808 for all, Except for § 1.221 papers (Fee Code 1803)

For papers filed under:

§ 1.28(c)(3) – for processing a non-itemized fee deficiency based on an error in small entity status.
§ 1.41 – for supplying the name or names of the inventor or inventors after the filing date without an oath or declaration as prescribed by § 1.63, except in provisional applications.
§ 1.48 – for correcting inventorship, except in provisional applications.
§ 1.52(d) – for processing a nonprovisional application filed with a specification in a language other than English.
§ 1.53(b)(3) – to convert a provisional application filed under § 1.53(c) into a nonprovisional application under § 1.53(b).
§ 1.55 – for entry of late priority papers.
§ 1.71(g)(2) – to enter an amendment to the specification for purposes of 35 U.S.C. 103(c)(2) if not filed within the cited time periods.
§ 1.99(e) – for processing a belated submission under § 1.99.
§ 1.103(b) – for requesting limited suspension of action, continued prosecution application (§ 1.53(d)).
§ 1.103(c) – for requesting limited suspension of action, request for continued examination (§ 1.114).
§ 1.103(d) – for requesting deferred examination of an application.
§ 1.217 – for processing a redacted copy of a paper submitted in the file of an application in which a redacted copy was submitted for the patent application publication.
§ 1.221 – for requesting voluntary publication or republication of an application. **Fee Code 1803**
§ 1.291(c)(5) – for processing a second or subsequent protest by the same real party in interest.
§ 1.497(d) – for filing an oath or declaration pursuant to 35 U.S.C. 371(c)(4) naming an inventive entity different from the inventive entity set forth in the international stage.
§ 3.81 – for a patent to issue to assignee, assignment submitted after payment of the issue fee.

Signature	February 5, 2009 Date
David V. Carlson Typed or printed name	31,153 Registration No., if applicable

SEND TO: Commissioner for Patents, P.O. Box 1450, Alexandria, VA 22313-1450. 132489B_1.DOC

Best Available Copy

RECEIVED
CENTRAL FAX CENTER
FEB 05 2009

PATENT

IN THE UNITED STATES PATENT AND TRADEMARK OFFICE

Patent No.	:	7,440,370
Issue Date	:	October 21, 2008
Applicants	:	Masashi Kuwahara et al.
Application No.	:	10/929,894
Filed	:	August 30, 2004
For	:	METHOD FOR DETERMINING A REPRODUCING POWER OF A LASER BEAM AND AN APPARATUS FOR RECORDING AND REPRODUCING DATA

Docket No.	:	890050.502
Date	:	February 5, 2009

VIA FACSIMILE (571) 273-8300

Mail Stop PETITIONS
Commissioner for Patents
P.O. Box 1450
Alexandria, VA 22313-1450

REQUEST UNDER 37 CFR 3.81(b) AND REQUEST FOR RECONSIDERATION OF DECISION ON REQUEST FOR CERTIFICATE OF CORRECTION UNDER 37 CFR § 1.322 AND/OR 1.323

Commissioner for Patents:

Applicants hereby petition and make a request under 37 CFR 3.81(b) for correction of the listed Assignee. A request is also made for the certificate of correction under § 1.323 of 37 CFR.

The assignment was submitted for recordation as set forth in § 3.11 before the issuance of the patent.

Applicants hereby enclose a copy of the Notice of Recordation of Assignment Document, showing the Reel 015515 and Frame 0711 and have a Recordation date of January 4, 2005.

Best Available Copy

The correction requested is this:

Section (73) Assignee, front cover of the Issued Patent should read as follows:

National Institute of Advanced Industrial Science and Technology, Tokyo (JP)

TDK Corporation, Tokyo (JP)

This error occurred because the Assignee National Institute of Advanced Industrial Science and Technology, Tokyo, Japan, was inadvertently omitted from the Issue Fee Transmittal Form PTOL-85B, when it was submitted on September 16, 2008.

On November 11, 2008, Applicants submitted a Request for Certificate of Correction in the above-identified patent, under the provisions of 37 CFR § 1.322 and/or 1.323. The correction was requested due to an error in the issued patent, wherein an Assignee of record, National Institute of Advanced Industrial Science and Technology, Tokyo, Japan, was inadvertently omitted in Section (73) Assignee, front cover of the Issued Patent.

In response, the Decisions and Certificates of Correction Branch mailed a letter denying this request, informing Applicants that a request under 37 CFR 3.81(b) must be filed prior to the issuance of a certificate of correction under the provision of 37 CFR § 1.322 and/or 1.323 (copy enclosed). Applicants were advised that further consideration will be given to these matters upon receipt of a request for reconsideration accompanied by supporting documents and a formal request under 37 CFR 3.81(b).

Accordingly, Applicants enclose herewith a Request for Certificate of Correction, supporting documentation to verify Applicant's requests, along with authorization for payment of the processing fee as required under 37 CFR § 1.17(i) and 1.20(1). Applicants hereby respectfully request reconsideration of the Decision on the Request for Certificate of Correction.

If this Request is granted, please forward the Request for Certificate of Correction to the Certificates of Correction Branch. The Director is authorized to charge Certificate of Correction fees due or credit any overpayment, to our Deposit Account No. 19-1090.

PAGE 5/13 * RCVD AT 2/5/2009 7:48:36 PM [Eastern Standard Time] * SVR:USPTO-EFXRF-6/18 * DNIS:2738300 * CSID:1 206 682 6031 * DURATION (mm-ss):02-46

Best Available Copy

Should the Office of Petitions have any questions or require any additional information, they are invited to contact the undersigned at (206) 622-4900.

Respectfully submitted,

SEED Intellectual Property Law Group PLLC

David V. Carlson
Registration No. 31,153

DVC:lcs

Enclosures:

Transmittal Form
Processing Fee Transmittal Form
Copy of Decisions and Certificates of Correction Branch letter dated 12/05/08
Copy of Notice of Recordation of Assignment Document
Request for Certificate of Correction
Certificate of Correction

701 Fifth Avenue, Suite 5400
Seattle, Washington 98104-7092
Phone: (206) 622-4900
Fax: (206) 682-6031

1324322_1.DOC

PAGE 6/13 * RCVD AT 2/5/2009 7:48:36 PM [Eastern Standard Time] * SVR:USPTO-EFXRF-6/18 * DNIS:2738300 * CSID:1 206 682 6031 * DURATION (mm-ss):02-46

Best Available Copy

DVC

UNITED STATES PATENT AND TRADEMARK OFFICE

890050.502

Commissioner for Patents
United States Patent and Trademark Office
P.O. Box 1450
Alexandria, VA 22313-1450
www.uspto.gov

RECEIVED
DEC 08 2008
Seed Intellectual Property
Law Group PLLC

12/5/08

Patent No. : 7,440,370 B2
Application No : 10/929,894
Inventor(s) : Kuwahara, et al.
Issued : October 21, 2008
Title : METHOD FOR DETERMINING A REPRODUCING POWER OF A LASER BEAM AND AN APPARATUS FOR RECORDING AND REPRODUCING DATA

Denied Cert. of Correction - Request for Reconsideration
Feb. 5, 2009

ENTERED IN DOCKET

Re: Request for Certificate of Correction

Consideration has been given your request for the issuance of a certificate of correction for the above-identified patent under the provisions of Rule(s) 1.322 and/or 1.323.

Assignees' names and addresses (assignment data) printed in a patent, are based *solely* on information supplied in the appropriate space for identifying the assignment data, i.e., item 3 of the Issue Fee Transmittal Form PTOL-85B. Granting of a request under 37 CFR 3.81(b) is required to correct applicant's error providing ***incorrect or erroneous*** assignment data, *before* issuance of a Certificate of Correction, under 37 CFR 1.323 *(see Manual of Patent Examining Procedures (M.P.E.P) Chp.1400, sect. 1481)*. This procedure is required *at any time after the issue fee is paid*, including after issuance of the patent.

In view of the foregoing, your request is hereby denied.

A request to correct the Assignee under 37 CFR 3.81(b) should include:

A. **the processing fee set forth in 37 CFR 1.117(h) (currently $130);**
B. a statement that the failure to include the correct assignee name on the PTOL-85B was inadvertent; and
C. a copy of the Notice of Recordation of Assignment Document, reflecting the reel and frame number where the assignment(s) is recorded and/or reflecting proof of *the date* the assignment was submitted for recordation.

In the Request, Applicant(s) may request that the file be forwarded to Certificates of Correction Branch, for issuance of a Certificate of Correction, if the Request is granted.

Any request under 37 CFR 3.81(b) should be directed to the following address or facsimile number:

By mail: Mail Stop PETITIONS
Commissioner for Patents
Post Office Box 1450
Alexandria, VA 22313-1450

Best Available Copy

By hand: Customer Service Window
Mail Stop Petitions
Randolph Building
401 Dulany Street
Alexandria, VA 22314

By fax: (571) 273-8300
ATTN: Office of Petitions

If a fee (currently $100) was previously submitted for consideration of a Request for Certificate of Correction, under CFR 1.323, to correct assignment data, no additional fee is required.

Valerie Jackson
For Mary F. Diggs
Decisions & Certificates
of Correction Branch
(703) 308-9390 ext. 114

David V. Carlson
Seed Intellectual Property Law Group PLLC
701 Fifth Avenue, Suite 5400
Seattle, Washington 98104

vj/MFD

Best Available Copy

UNITED STATES DEPARTMENT OF COMMERCE
Patent and Trademark Office
ASSISTANT SECRETARY AND COMMISSIONER
OF PATENTS AND TRADEMARKS
Washington, D.C. 20231

RECEIVED
CENTRAL FAX CENTER
FEB 05 2009

JANUARY 05, 2005

PTAS *500016349A*

DAVID V. CARLSON
701 FIFTH AVENUE
SUITE 6300
SEATTLE, WA 98104-7092

UNITED STATES PATENT AND TRADEMARK OFFICE
NOTICE OF RECORDATION OF ASSIGNMENT DOCUMENT

THE ENCLOSED DOCUMENT HAS BEEN RECORDED BY THE ASSIGNMENT DIVISION OF THE U.S. PATENT AND TRADEMARK OFFICE. A COMPLETE MICROFILM COPY IS AVAILABLE AT THE ASSIGNMENT SEARCH ROOM ON THE REEL AND FRAME NUMBER REFERENCED BELOW.

PLEASE REVIEW ALL INFORMATION CONTAINED ON THIS NOTICE. THE INFORMATION CONTAINED ON THIS RECORDATION NOTICE REFLECTS THE DATA PRESENT IN THE PATENT AND TRADEMARK ASSIGNMENT SYSTEM. IF YOU SHOULD FIND ANY ERRORS OR HAVE QUESTIONS CONCERNING THIS NOTICE, YOU MAY CONTACT THE EMPLOYEE WHOSE NAME APPEARS ON THIS NOTICE AT 703-308-9723. PLEASE SEND REQUEST FOR CORRECTION TO: U.S. PATENT AND TRADEMARK OFFICE, ASSIGNMENT DIVISION, BOX ASSIGNMENTS, CG-4, 1213 JEFFERSON DAVIS HWY, SUITE 320, WASHINGTON, D.C. 20231.

RECORDATION DATE: 01/04/2005 REEL/FRAME: 015515/0711
NUMBER OF PAGES: 6

BRIEF: ASSIGNMENT OF ASSIGNOR'S INTEREST (SEE DOCUMENT FOR DETAILS).

ASSIGNOR:
KUWAHARA, MASASHI DOC DATE: 12/17/2004

ASSIGNOR:
SHIMA, TAKAYUKI DOC DATE: 12/17/2004

ASSIGNOR:
TOMINAGA, JUNJI DOC DATE: 12/17/2004

ASSIGNOR:
KIKUKAWA, TAKASHI DOC DATE: 12/17/2004

ASSIGNOR:
FUKUZAWA, NARUTOSHI DOC DATE: 12/17/2004

ASSIGNOR:
KOBAYASHI, TATSUHIRO DOC DATE: 12/17/2004

Best Available Copy

015515/0711 PAGE 2

ASSIGNEE:
NATIONAL INSTITUTE OF ADVANCED
INDUSTRIAL SCIENCE AND
TECHNOLOGY
3-1, KASUMIGASEKI 1-CHOME, CHIYODA-
KU
TOKYO, JAPAN 100-8921

ASSIGNEE:
TDK CORPORATION
1-13-1, NIHONBASHI, CHUO-KU
TOKYO, JAPAN 103-8272

SERIAL NUMBER: 10929894 FILING DATE: 08/30/2004
PATENT NUMBER: ISSUE DATE:
TITLE: METHOD FOR DETERMINING A REPRODUCING POWER OF A LASER BEAM AND AN APPARATUS FOR RECORDING AND REPRODUCING DATA

SSHIFFLETT, EXAMINER
ASSIGNMENT DIVISION
OFFICE OF PUBLIC RECORDS

Best Available Copy

RECEIVED
CENTRAL FAX CENTER
FEB 05 2009

PATENT

IN THE UNITED STATES PATENT AND TRADEMARK OFFICE

Patent No. : 7,440,370

Issue Date : October 21, 2008

Inventors : Masashi Kuwahara et al.

Docket No. : 890050.502

Date : February 5, 2009

Mail Stop Certificate of Correction
Commissioner for Patents
P.O. Box 1450
Alexandria, VA 22313-1450

SECOND REQUEST FOR CERTIFICATE OF CORRECTION

Commissioner for Patents:

A certificate of correction is respectfully requested in the above-identified patent. The following error was made:

In item (73), Assignee, "TDK Corporation, Tokyo (JP)" is incorrect. As set forth in the Notice of Recordation of Assignment dated January 5, 2005, the correct Assignees should read as --National Institute of Advanced Industrial Science and Technology, Tokyo (JP) and TDK Corporation, Tokyo (JP)--.

PAGE 11/13 * RCVD AT 2/5/2009 7:48:36 PM [Eastern Standard Time] * SVR:USPTO-EFXRF-6/18 * DNIS:2738300 * CSID:1 206 682 6031 * DURATION (mm-ss):02-46

Best Available Copy

RECEIVED
CENTRAL FAX CENTER
FEB 05 2009

Attached is the certificate of correction, which indicates the correction to be made, by reference to the item number in the printed patent. Because the error was inadvertently made by the Applicants, a fee in the amount of $100 is necessary.

The Director is hereby authorized to charge payment of any fees associated with this communication to Deposit Account No. 19-1090.

Respectfully submitted,
SEED Intellectual Property Law Group PLLC

David V. Carlson
Registration No. 31,153

DVC:lch

Enclosure:
Certificate of Correction

SEED Intellectual Property Law Group PLLC
701 Fifth Avenue, Suite 5400
Seattle, Washington 98104-7092
Phone: (206) 622-4900
Fax: (206) 682-6031

1324477_1.DOC

PAGE 12/13 * RCVD AT 2/5/2009 7:48:36 PM [Eastern Standard Time] * SVR:USPTO-EFXRF-6/18 * DNIS:2738300 * CSID:1 206 682 6031 * DURATION (mm-ss):02-46

Best Available Copy

UNITED STATES PATENT AND TRADEMARK OFFICE
CERTIFICATE OF CORRECTION

PATENT NO : 7,440,370
DATED : October 21, 2008
INVENTOR : Masashi Kuwahara et al.

It is certified that an error appears in the above-identified patent and that said Letters Patent are hereby corrected as shown below:

Item (73)

"TDK Corporation, Tokyo (JP)" should read as --National Institute of Advanced Industrial Science and Technology, Tokyo (JP) and TDK Corporation, Tokyo (JP)--.

MAILING ADDRESS OF SENDER:
David V. Carlson
Seed Intellectual Property Law Group PLLC
701 Fifth Avenue, Suite 5400
Seattle, Washington 98104

PATENT NO. 7,440,370

No. of additional copies

Burden hour Statement: This form is estimated to take 1.0 hour to complete. Time will vary depending upon the needs of the individual case. Any comments on the amount of time you are required to complete this form should be sent to the Chief Information Officer, Patent and Trademark Office, Washington, DC 20231. DO NOT SEND FEES OR COMPLETED FORMS TO THIS ADDRESS. SEND TO: Assistant Commissioner for Patents, Washington, DC 20231.

1324480_1.DOC

RECEIVED
CENTRAL FAX CENTER
FEB 05 2009

Seed IP

February 5, 2009

David V. Carlson
Telephone: (206) 694-4828
davec@SeedIP.com

Facsimile Transmission

To: Office of Petitions

Fax No: (571) 273-8300

Phone No:

Re: U.S. Patent No. 7,440,370

Seed IP Ref: 890050.502

No. of Pages: 13 (including this page)

If you do not receive all pages, please call Laura Hernandez at (206) 622-4900 or fax our office.

Seed Intellectual Property Law Group PLLC

address 701 Fifth Avenue
Suite 5400
Seattle, WA 98104
telephone 206.622.4900
facsimile 206.682.6031
website SeedIP.com

[X] Urgent [X] For Review [X] Please Confirm Receipt [ ] Please Reply ASAP

Attached:

1. Transmittal Form
2. Processing Fee Transmittal Form
3. Request Under 37 CFR 3.81(b) and Request for Reconsideration of Decision on Request for Certificate of Correction Under 37 CFR § 1.322 and/or 1.323
4. Copy of Decisions and Certificates of Correction Branch letter dated 12/05/08
5. Copy of Notice of Recordation of Assignment Document
6. Second Request for Certificate of Correction
7. Certificate of Correction

CONFIDENTIALITY NOTICE:
The information contained in this facsimile message is legally privileged and/or confidential information intended only for the use of the addressee named above. If you are not the intended recipient, you are hereby notified that any use, dissemination, distribution, or copying of this facsimile or its content is strictly prohibited. If you have received this facsimile in error, please immediately notify us by telephone and return the original facsimile message to us by mail or destroy it without making a copy. Thank you.

1324472_1.DOC

RECEIVED
CENTRAL FAX CENTER
FEB 05 2009

TRANSMITTAL FORM

(To be used for all correspondence after initial filing)

Application Number	10/929,894
Filing Date	August 30, 2004
First Named Inventor	Masashi Kuwahara
Art Unit	2627
Examiner Name	Thang V. Tran
Attorney Docket No.	890050.502

ENCLOSURES (*check all that apply*)

- [X] Fee Transmittal Form
  - [ ] Fee Attached
- [ ] Amendment/Response
  - [ ] After Final
  - [ ] Affidavits/declaration(s)
- [ ] Extension of Time Request
- [ ] Express Abandonment Request
- [ ] Information Disclosure Statement and Transmittal
- [ ] Cited References
- [ ] Certified Copy of Priority Document(s)
- [ ] Response to Missing Parts under 37 CFR 1.52 or 1.53
- [ ] Response to Missing Parts/Incomplete Application
- [ ] Drawing(s)
- [ ] Request for Corrected Filing Receipt
- [ ] Licensing-related Papers
- [ ] Petition
- [ ] Petition to Convert to a Provisional Application
- [ ] Power of Attorney, Revocation, Change of Correspondence Address
- [ ] Declaration
- [ ] Statement under 37 CFR 3.73(b)
- [ ] Terminal Disclaimer
- [ ] Request for Refund
- [ ] CD, Number of CD(s) _____
  - [ ] Landscape Table on CD
- [ ] After Allowance Communication to TC
- [ ] Appeal Communication to Board of Appeals and Interferences
- [ ] Appeal Communication to TC *(Appeal Notice, Brief, Reply Brief)*
- [ ] Proprietary Information
- [ ] Status Letter
- [X] Return Receipt Postcard
- [X] Other Enclosure(s) (*please identify below*):

Request Under 37 CFR 3.81(b) and Request for Reconsideration of Decision on Request for Certificate of Correction Under 37 CFR § 1.322 and/or 1.323 w/enclosures

Remarks

SIGNATURE OF APPLICANT, ATTORNEY, OR AGENT

Firm Name	Seed Intellectual Property Law Group PLLC	Customer Number 00500	
Signature			
Printed Name	**David V. Carlson**		
Date	**February 5, 2009**	Reg. No.	**31,153**

CERTIFICATE OF TRANSMISSION/MAILING

I hereby certify that this correspondence is being facsimile transmitted to the USPTO or deposited with the United States Postal Service with sufficient postage as first class mail in an envelope addressed to: Commissioner for Patents, P.O. Box 1450, Alexandria, VA 22313-1450 on the date shown below.

Signature		
Typed or printed name	Laura C. Hernandez	Date: February 5, 2009

SEND TO: Commissioner for Patents, P.O. Box 1450, Alexandria, VA 22313-1450.

1324474_1.DOC

RECEIVED
CENTRAL FAX CENTER
FEB 05 2009

PROCESSING FEE Under 37 CFR 1.17(i) TRANSMITTAL (Fees are subject to annual revision)		
	Application Number	10/929,894
	Filing Date	August 30, 2004
	First Named Inventor	Masashi Kuwahara
	Art Unit	2627
Send completed form to: Commissioner for Patents P.O. Box 1450, Alexandria, VA 22313-1450	*Examiner Name*	Thang V. Tran
	Attorney Docket Number	890050.502

Enclosed is a paper filed under 37 CFR 3.81(b); 1.322 and/or 1.323 that requires a processing fee (37 CFR 1.17(i)).
Payment of $130 is enclosed.

This form should be included with the above-mentioned paper and faxed or mailed to the Office using the appropriate Mail Stop, if applicable. *For transmittal of petition fees under 37 CFR 1.17(f), (g), or (h), see form PTO/SB/17p.*

Payment of Fees (small entity amounts are NOT available for the processing fees)

- [x] The Commissioner is hereby authorized to charge the following fees to Deposit Account No. 19-1090:
  - [x] processing fee under 37 CFR 1.17(i)
  - [x] any deficiency of fees and credit of any overpayments
- [ ] Check in the amount of $_____ is enclosed.
- [ ] Payment by credit card (Form PTO-2038 or equivalent enclosed). Do not provide credit card information on this form.

Processing Fees under 37 CFR 1.17(i): Fee $130 Fee Code 1808 for all, Except for § 1.221 papers (Fee Code 1803)

For papers filed under:

§ 1.28(c)(3) – for processing a non-itemized fee deficiency based on an error in small entity status.
§ 1.41 – for supplying the name or names of the inventor or inventors after the filing date without an oath or declaration as prescribed by § 1.63, except in provisional applications.
§ 1.48 – for correcting inventorship, except in provisional applications.
§ 1.52(d) – for processing a nonprovisional application filed with a specification in a language other than English.
§ 1.53(b)(3) – to convert a provisional application filed under § 1.53(c) into a nonprovisional application under § 1.53(b).
§ 1.55 – for entry of late priority papers.
§ 1.71(g)(2) – to enter an amendment to the specification for purposes of 35 U.S.C. 103(c)(2) if not filed within the cited time periods.
§ 1.99(e) – for processing a belated submission under § 1.99.
§ 1.103(b) – for requesting limited suspension of action, continued prosecution application (§ 1.53(d)).
§ 1.103(c) – for requesting limited suspension of action, request for continued examination (§ 1.114).
§ 1.103(d) – for requesting deferred examination of an application.
§ 1.217 – for processing a redacted copy of a paper submitted in the file of an application in which a redacted copy was submitted for the patent application publication.
§ 1.221 – for requesting voluntary publication or republication of an application. **Fee Code 1803**
§ 1.291(c)(5) – for processing a second or subsequent protest by the same real party in interest.
§ 1.497(d) – for filing an oath or declaration pursuant to 35 U.S.C. 371(c)(4) naming an inventive entity different from the inventive entity set forth in the international stage.
§ 3.81 – for a patent to issue to assignee, assignment submitted after payment of the issue fee.

Signature	**February 5, 2009** Date
David V. Carlson Typed or printed name	**31,153** Registration No., if applicable

SEND TO: Commissioner for Patents, P.O. Box 1450, Alexandria, VA 22313-1450. 1324898_1.DOC

RECEIVED
CENTRAL FAX CENTER
FEB 05 2009

PATENT

IN THE UNITED STATES PATENT AND TRADEMARK OFFICE

Patent No.	:	7,440,370
Issue Date	:	October 21, 2008
Applicants	:	Masashi Kuwahara et al.
Application No.	:	10/929,894
Filed	:	August 30, 2004
For	:	METHOD FOR DETERMINING A REPRODUCING POWER OF A LASER BEAM AND AN APPARATUS FOR RECORDING AND REPRODUCING DATA

Docket No.	:	890050.502
Date	:	February 5, 2009

VIA FACSIMILE (571) 273-8300

Mail Stop PETITIONS
Commissioner for Patents
P.O. Box 1450
Alexandria, VA 22313-1450

REQUEST UNDER 37 CFR 3.81(b) AND REQUEST FOR RECONSIDERATION OF DECISION ON REQUEST FOR CERTIFICATE OF CORRECTION UNDER 37 CFR § 1.322 AND/OR 1.323

Commissioner for Patents:

Applicants hereby petition and make a request under 37 CFR 3.81(b) for correction of the listed Assignee. A request is also made for the certificate of correction under § 1.323 of 37 CFR.

The assignment was submitted for recordation as set forth in § 3.11 before the issuance of the patent.

Applicants hereby enclose a copy of the Notice of Recordation of Assignment Document, showing the Reel 015515 and Frame 0711 and have a Recordation date of January 4, 2005.

The correction requested is this:

Section (73) Assignee, front cover of the Issued Patent should read as follows:

National Institute of Advanced Industrial Science and Technology, Tokyo (JP)

TDK Corporation, Tokyo (JP)

This error occurred because the Assignee National Institute of Advanced Industrial Science and Technology, Tokyo, Japan, was inadvertently omitted from the Issue Fee Transmittal Form PTOL-85B, when it was submitted on September 16, 2008.

On November 11, 2008, Applicants submitted a Request for Certificate of Correction in the above-identified patent, under the provisions of 37 CFR § 1.322 and/or 1.323. The correction was requested due to an error in the issued patent, wherein an Assignee of record, National Institute of Advanced Industrial Science and Technology, Tokyo, Japan, was inadvertently omitted in Section (73) Assignee, front cover of the Issued Patent.

In response, the Decisions and Certificates of Correction Branch mailed a letter denying this request, informing Applicants that a request under 37 CFR 3.81(b) must be filed prior to the issuance of a certificate of correction under the provision of 37 CFR § 1.322 and/or 1.323 (copy enclosed). Applicants were advised that further consideration will be given to these matters upon receipt of a request for reconsideration accompanied by supporting documents and a formal request under 37 CFR 3.81(b).

Accordingly, Applicants enclose herewith a Request for Certificate of Correction, supporting documentation to verify Applicant's requests, along with authorization for payment of the processing fee as required under 37 CFR § 1.17(i) and 1.20(1). Applicants hereby respectfully request reconsideration of the Decision on the Request for Certificate of Correction.

If this Request is granted, please forward the Request for Certificate of Correction to the Certificates of Correction Branch. The Director is authorized to charge Certificate of Correction fees due or credit any overpayment, to our Deposit Account No. 19-1090.

PAGE 5/5 * RCVD AT 2/5/2009 7:28:56 PM [Eastern Standard Time] * SVR:USPTO-EFXRF-4/16 * DNIS:2738300 * CSID:2066826031 * DURATION (mm-ss):06-18

This Page is Inserted by IFW Indexing and Scanning Operations and is not part of the Official Record

BEST AVAILABLE IMAGES

Defective images within this document are accurate representations of the original documents submitted by the applicant.

Defects in the images include but are not limited to the items checked:

- ☐ **BLACK BORDERS**
- ☐ **IMAGE CUT OFF AT TOP, BOTTOM OR SIDES**
- ☐ **FADED TEXT OR DRAWING**
- ☐ **BLURRED OR ILLEGIBLE TEXT OR DRAWING**
- ☐ **SKEWED/SLANTED IMAGES**
- ☐ **COLOR OR BLACK AND WHITE PHOTOGRAPHS**
- ☐ **GRAY SCALE DOCUMENTS**
- ☒ **LINES OR MARKS ON ORIGINAL DOCUMENT**
- ☐ **REFERENCE(S) OR EXHIBIT(S) SUBMITTED ARE POOR QUALITY**
- ☐ **OTHER:**

IMAGES ARE BEST AVAILABLE COPY.
As rescanning these documents will not correct the image problems checked, please do not report these problems to the IFW Image Problem Mailbox.

UNITED STATES PATENT AND TRADEMARK OFFICE

Commissioner for Patents
United States Patent and Trademark Office
P.O. Box 1450
Alexandria, VA 22313-1450
www.uspto.gov

Patterson, Thuente, Skaar & Christensen, P.A.
4800 IDS Center
80 South 8th Street
Minneapolis MN 55402-2100

COPY MAILED

DEC 30 2004

OFFICE OF PETITIONS

In re Application of
Lavigne, et al.
Application No. 10/929,913
Filed: August 30, 2004
Attorney Docket No. 3335.01US02

For: AMINO ACIDS FROM FISH AND SOY PROTEINS IMPROVE INSULIN SENSITIVITY

DECISION GRANTING PETITION

This is a decision on the correspondence, filed December 1, 2004, requesting in effect, withdrawal of the Notice of Incomplete Nonprovisional Application, mailed October 27, 2004 and accordation of an August 30, 2004 filing date to the above-identified application. The petition will be treated under 37 CFR 1.53(e).

The application was deposited on August 30, 2004. On October 27, 2004, the Office of Initial Patent Examination mailed a Notice informing petitioners that no filing date had been accorded to the application papers deposited on August 30, 2004 because no drawing was present, as is required by 35 USC 113. In response to the Notice, petitioners timely filed the present petition.

It is noted that the above-identified application contains method claims. As stated in MPEP 601.01(f), it is the practice of the PTO to treat an application that contains at least one process or method claim as an application for which a drawing is not necessary for an understanding of the invention under 35 USC 113 (first sentence.)

MPEP 601.01(f) also states that:

> A nonprovisional application having at least one claim, or a provisional application having at least some disclosure, directed to the subject matter discussed above for

> which a drawing is usually not considered essential for a filing date, describing drawing figures in the specification, but filed without drawings will be treated as an application filed without all of the drawing figures referred to in the specification as discussed in MPEP 601.01(g), so long as the application contains something that can be construed as a written description.

This application contains method claims. Therefore, the above-identified application should have been treated as an application filed without all of the drawing figures referred to in the specification as discussed in MPEP 601.01(g).

MPEP 601.01(g) states that if an application is filed without all of the drawing figures referred to in the specification, a "Notice of Omitted Items" is mailed indicating that the application has been accorded a filing date.

In view of the above, the "Notice" mailed October 27, 2004 was mailed in error and is hereby withdrawn. The petition is **granted**. No petition fee has been or will be charged in connection with this matter.

It is noted that the instant application is a divisional application of application no.10/018,189 and the entire contents of the prior application was incorporated by reference into the instant application upon initial filing.

MPEP 201.06(c) states that:

> . . . an applicant may incorporate by reference the prior application by including, in the application-as-filed, a statement that such specifically enumerated prior application or applications are "hereby incorporated herein by reference." The statement may appear in the specification or in the application transmittal letter. The inclusion of this incorporation by reference of the prior application(s) will permit an applicant to amend the continuing application to include any subject matter in such prior application(s), without the need for a petition.

If applicants desire that the missing figures be added to the application, the appropriate procedure is by way of amendment requesting entry of the figures. Any such amendment should be filed prior to the first action on the merits and the examiner will consider the figures for new matter. See MPEP § 608.02.

The application is being returned to the Office of Initial Patent Examination for further processing with a filing date of **August 30, 2004**. The drawings submitted on December 1, 2004 will not be processed at this time.

Telephone inquiries specific to this matter should be directed to the undersigned at (571) 272-3230.

E. Shirene Willis

E. Shirene Willis
Senior Petitions Attorney
Office of Petitions
Office of the Deputy Commissioner
for Patent Examination Policy

UNITED STATES PATENT AND TRADEMARK OFFICE

COMMISSIONER FOR PATENTS
UNITED STATES PATENT AND TRADEMARK OFFICE
P.O. BOX 1450
ALEXANDRIA, VA 22313-1450
www.uspto.gov

MAIL

NOV 0 8 2004

DIRECTOR OFFICE
TECHNOLOGY CENTER 2600

WOLF GREENFIELD & SACKS, PC
FEDERAL RESERVE PLAZA
600 ATLANTIC AVENUE
BOSTON MA 02210-2211

In re Application of:
Keith McClelland, et al.
Application No. 10/929,917
Filed: August 30, 2004
For: **REMOTE BAGGAGE SCREENING METHOD**

DECISION ON PETITION TO MAKE SPECIAL

This is a decision on the Petition To Make Special under MPEP 708.02, XI: Invention for Countering Terrorism, filed October 30, 2004.

A grantable petition to make an application special under 37 C.F.R. § 1.102(d), and in accordance with MPEP 708.02, XI, for an invention which contributes to the countering of terrorism, must include the petition fee under 37 CFR 1.17(i). The petition must also be accompanied by a statement explaining how the invention contributes to countering terrorism. Examples of the types of technology for countering terrorism are set forth in MPEP 708.02, XI as including, but not limited to, systems for detecting/identifying explosives, aircraft sensors/security systems, and vehicular barricades/disabling systems.

The statements made in the petition show how the technology of the instant application directly contributes to the countering of terrorism.

Accordingly, the petition is **GRANTED**.

The application file is being forwarded to the Examiner of Record for expedited examination. The application will retain its special status throughout its entire prosecution, including any appeal to the Board of Patent Appeals and Interferences, subject only to diligent prosecution by the applicant.

Kenneth A. Wieder
Special Program Examiner
Technology Center 2600
Communications

UNITED STATES PATENT AND TRADEMARK OFFICE

COMMISSIONER FOR PATENTS
UNITED STATES PATENT AND TRADEMARK OFFICE
P.O. BOX 1450
ALEXANDRIA, VA 22313-1450
www.uspto.gov

COPY MAILED

MAR 20 2006

OFFICE OF PETITIONS

THEROX, INC.
2400 MICHELSON DRIVE
IRVINE, CA 92612

In re Application of	:
Daoud, et al.	: DECISION ON PETITION
Application No. 10/929,918	:
Filed: August 30, 2004	:
Atty. Docket No.: PA095-US	:

This is a decision on the petition under 37 CFR 1.137(b), filed February 15, 2006, to revive the above-identified application.

The petition is **DISMISSED**.

This application became abandoned June 8, 2005 for failure to timely submit the issue fee as required by the Notice of Allowance mailed March 7, 2005. The Notice set a three month statutory period of time for reply. Notice of Abandonment was mailed January 11, 2006.

A grantable petition pursuant to 37 C.F.R. § 1.137(b) must be accompanied by: (1) the required reply to the outstanding Office action or notice, unless previously filed; (2) the petition fee as set forth in 37 C.F.R. § 1.17(m); (3) a statement that the entire delay in filing the required reply from the due date for the reply until the filing of a grantable petition pursuant to 37 C.F.R. § 1.137(b) was unintentional; and (4) any terminal disclaimer (and fee set forth in 37 C.F.R. § 1.20(d)) required pursuant to 37 C.F.R. § 1.137(c).

The instant petition fails to satisfy requirement (1) set forth above. While petitioners have submitted a request for continued examination, petitioners are advised that where an application becomes abandoned as a consequence of failure to pay the issue fee, the required reply under 37 CFR 1.137(b)(1) must include the issue fee. MPEP 711.03(c).

As the instant petition is not accompanied by the required issue fee and authority to charge the § 1.18 fee has not been provided, the instant petition is subject to dismissal.

Any renewed petition must be accompanied by the required reply.

Further correspondence with respect to this matter should be addressed as follows:

By mail: **Mail Stop Petition**
Commissioner for Patents
P.O. Box 1450
Alexandria, VA 22313-1450

By facsimile: (571) 273-8300

By hand delivery: U.S. Patent and Trademark Office
Customer Window, **Mail Stop Petition**
Randolph Building
401 Dulany Street
Alexandria, VA 22314

Telephone inquiries concerning this matter may be directed to the undersigned at (571) 272-3205.

Alesia M. Brown
Petitions Attorney
Office of Petitions

UNITED STATES PATENT AND TRADEMARK OFFICE

COMMISSIONER FOR PATENTS
UNITED STATES PATENT AND TRADEMARK OFFICE
P.O. BOX 1450
ALEXANDRIA, VA 22313-1450
www.uspto.gov

THEROX, INC.
2400 MICHELSON DRIVE
IRVINE, CA 92612

COPY MAILED
APR 27 2006
OFFICE OF PETITIONS

In re Application of	:	
Daoud, et al.	:	DECISION ON PETITION
Application No. 10/929,918	:	
Filed: August 30, 2004	:	
Atty. Docket No.: PA095-US	:	

This is a decision on the renewed petition under 37 CFR 1.137(b), filed March 24, 2006, to revive the above-identified application.

The petition is **GRANTED**.

This application became abandoned June 8, 2005 for failure to timely submit the issue fee as required by the Notice of Allowance mailed March 7, 2005. The Notice set a three month statutory period of time for reply. Notice of Abandonment was mailed January 11, 2006. A petition under 37 CFR 1.137 was filed February 15, 2006 and dismissed March 20, 2006.

A grantable petition pursuant to 37 C.F.R. § 1.137(b) must be accompanied by: (1) the required reply to the outstanding Office action or notice, unless previously filed; (2) the petition fee as set forth in 37 C.F.R. § 1.17(m); (3) a statement that the entire delay in filing the required reply from the due date for the reply until the filing of a grantable petition pursuant to 37 C.F.R. § 1.137(b) was unintentional; and (4) any terminal disclaimer (and fee set forth in 37 C.F.R. § 1.20(d)) required pursuant to 37 C.F.R. § 1.137(c).

The instant petition has been reviewed and found in compliance with the provisions of 37 CFR 1.137(b). Accordingly, the failure to timely submit a proper reply to the Notice is accepted as having been unintentionally delayed. The required issue fee has been charged to Deposit Account No. 50-1769.

This application file is being forwarded to Technology Center 3700 for processing of the RCE submitted herewith.

Telephone inquiries concerning this matter may be directed to the undersigned at (571) 272-3205.

Alesia M. Brown
Petitions Attorney
Office of Petitions

UNITED STATES PATENT AND TRADEMARK OFFICE

Commissioner for Patents
United States Patent and Trademark Office
P.O. Box 1450
Alexandria, VA 22313-1450
www.uspto.gov

Don D. Cha
547 Buena Vista Road
Golden CO 80401

MAILED

MAR 05 2009

OFFICE OF PETITIONS

In re Application of	:	
Frederickson et al.	:	
Application No.: 10/929924	:	ON PETITION
Filing or 371(c) Date: 08/30/2004	:	
Attorney Docket Number:	:	
ANDR-000600US	:	

This is a decision on the Petition for Revival of an Application for Patent Abandoned Unintentionally Under 37 C.F.R. § 1.137(b), filed February 2, 2009.

This Petition is hereby **granted**.

The above-identified application became abandoned for failure to timely reply to the non-final Office action, mailed August 27, 2007. The Office action set a three (3) period for reply. Extensions of time under 37 CFR 1.136(a) were available. No reply having been received, the application became abandoned on November 28, 2007. A Notice of Abandonment was mailed May 12, 2008.

Applicant files the present petition and Amendment in response to the Office action. The petition satisfies the conditions for revival pursuant to the provisions of 37 CFR 1.137(b) in that (1) the reply in the form of an Amendment is filed with the present petition; (2) the petition fee; and (3) the required statement of unintentional delay. Accordingly, the reply is accepted as having been unintentionally delayed.

This application is being referred to Technology Center Art Unit 1797 for processing of the response to the Office action filed with the petition in the normal course of business.

Telephone inquiries concerning this decision should be directed to the undersigned at (571) 272-3232.

/Derek L. Woods/
Derek L. Woods
Attorney
Office of Petitions

UNITED STATES PATENT AND TRADEMARK OFFICE

Commissioner for Patents
United States Patent and Trademark Office
P.O. Box 1450
Alexandria, VA 22313-1450
www.uspto.gov

SCHWEGMAN, LUNDBERG, WOESSNER & KLUTH PA
P. O. BOX 2938
MINNEAPOLIS, MN 55402

COPY MAILED

AUG 07 2007

OFFICE OF PETITIONS

In re Application of	:	
Chia Yong Poo et al	:	
Application No. 10/929,932	:	DECISION GRANTING PETITION
Filed: August 30, 2004	:	UNDER 37 CFR 1.313(c)(2)
Attorney Docket No. 303.773US2	:	

This is a decision on the petition, filed August 2, 2007, under 37 CFR 1.313(c)(2) to withdraw the above-identified application from issue after payment of the issue fee.

The petition is **GRANTED**.

The above-identified application is withdrawn from issue for consideration of a submission under 37 CFR 1.114 (request for continued examination). See 37 CFR 1.313(c)(2).

Petitioner is advised that the issue fee paid on June 29, 2007 in the above-identified application cannot be refunded. If, however, the above-identified application is again allowed, petitioner may request that it be applied towards the issue fee required by the new Notice of Allowance.[1]

Telephone inquiries should be directed to the undersigned at (571) 272-3218.

This matter is being referred to Technology Center AU 2815 for processing of the request for continued examination under 37 CFR 1.114 and for consideration of the Information Disclosure Statement.

Frances Hicks
Petitions Examiner
Office of Petitions

C:\Documents and Settings\fhicks\My Documents\470\aug10\929932.wpd

---

[1] *The request to apply the issue fee to the new Notice may be satisfied by completing and returning the new Part B – Fee(s) Transmittal Form (along with any balance due at the time of submission). Petitioner is advised that the Issue Fee Transmittal Form **must** be completed and timely submitted to avoid abandonment.*

UNITED STATES PATENT AND TRADEMARK OFFICE

COMMISSIONER FOR PATENTS
UNITED STATES PATENT AND TRADEMARK OFFICE
P.O. BOX 1450
ALEXANDRIA, VA 22313-1450
www.uspto.gov

MAILED

MAY 18 2005

DIRECTOR'S OFFICE
TECHNOLOGY CENTER 2600

Koestner Bertani, LLP
Post Office Box 26780
Austin TX 78755

In re Application of :
Michael F. White :
Application No. 10/929,962 :
Filed: August 25, 2001 :
For: **SYSTEM AND METHOD TO ENHANCE THE QUALITY OF DIGITAL IMAGE** :

DECISION ON PETITION TO MAKE SPECIAL

This is a decision on the petition filed December 27, 2004 under Manual of Patent Examination Procedure §708.02, VIII requesting accelerated examination.

The petition under Manual of Patent Examination Procedure §708.02, VIII, must:
(1) be filed prior to receiving any examination by the examiner,
(2) be accompanied by the required fee- $130,
(3) the claims should be directed to a single invention (if it is determined that the claims pertain to more than one invention, then applicant will have to make an election without traverse or forfeit accelerated examination status),
(4) state that a pre-examination search was made, and fully discuss the search method employed, such as classes and subclasses searched, publications, Chemical abstracts, patents, etc. A search made by a foreign patent office satisfies this requirement,
(5) be accompanied by a copy of each of the references most closely related to the subject matter encompassed by the claims if said references are not already of record,
(6) fully discuss the references, pointing out with the particularity required by 37 C.F.R. §1.111 (b) and (c), how the claimed subject matter is patentable over the references.

The petitioner meets all the above-listed requirements. Accordingly, the petition is **GRANTED**.

The application will retain its special status throughout its entire prosecution, including any appeal to the Board of Patent Appeals and Interferences, subject only to diligent prosecution by the applicant. The application file is being forwarded to the examiner for appropriate action in due course.

Krista Zele
Special Program Examiner
Technology Center 2600
Communications

UNITED STATES PATENT AND TRADEMARK OFFICE

Commissioner for Patents
United States Patent and Trademark Office
P.O. Box 1450
Alexandria, VA 22313-1450
www.uspto.gov

COPY MAILED
SEP 29 2008

G. TURNER MOLLER, JR.
711 NORTH CARANCAHUA, SUITE 720
CORPUS CHRISTI TX 78475

In re Application of

Wesley J. Forehand, Jr.

Application No. 10/929,967

Filed: August 30, 2004

Attorney Docket No.

DECISION ON PETITION

This is a decision on the petition under 37 CFR 1.181(a) to withdraw the holding of abandonment, filed August 21, 2008.

The petition under 37 CFR 1.181(a) to withdraw the holding of abandonment is **granted**.

This application was held abandoned on February 20, 2008, after it was believed that a proper response was not received to the non-final Office action mailed November 19, 2007. The notice allowed a shortened statutory period for reply of three (3) months from its mailing date. Extensions of the time set for reply were available pursuant to 37 CFR 1.136(a). A Notice of Abandonment was mailed on August 6, 2008, indicating that the response filed February 21, 2008, was received, but was not timely response to the non-final Office action and cited Section 2734 of the *Manual of Patent Examining Procedure* (MPEP) as authority for this determination.

The instant petition was filed on August 21, 2008. Petitioner maintains that a timely response was filed on February 21, 2008, which contained a certificate of mailing dated February 18, 2008. Petitioner further maintains that Section 2734 of the MPEP is only applicable in matters of patent term of adjustment and that Section 711.03(c) governs withdrawal of the holding of abandonment when a timely response is received.

Petitioner's argument has been considered and is persuasive. Section 711.03(c) of the MPEP provides, in pertinent part, that:

> Where a certificate of mailing under 37 CFR 1.8, but not a postcard receipt, is relied upon in a petition to withdraw the holding of abandonment, see 37 CFR 1.8(b) and MPEP § 512. As stated in 37 CFR 1.8(b)(3) the statement that attests to the previous timely mailing or transmission of the correspondence must be on a personal knowledge basis, or to the satisfaction of the Director of the USPTO. If the statement attesting to the previous timely mailing is not made by the person who signed the Certificate of Mailing (i.e., there is no personal knowledge basis), then the statement attesting to the previous timely mailing should include evidence that supports the conclusion that the correspondence was actually mailed (e.g., copies of a mailing log establishing that correspondence was mailed for that application). When the correspondence is shown to have been timely filed based on a certificate of mailing, the correspondence is entered into

PALM with the actual date of receipt (i.e., the date that the duplicate copy of the papers was filed with the statement under 37 CFR 1.8).

A review of the application file reveals that the response filed February 21, 2008, contained a certificate of mailing dated February 18, 2008, and was signed by G. Turner Moller who also signed the instant petition. Section 2734 of the MPEP is not applicable in this case as petitioner is not asking for an adjustment of the patent term. Petitioner properly used the protections offered by 37 CFR 1.8 and is, therefore, entitled to assert that the response filed February 21, 2008, is timely by virtue of the certificate of mailing dated February 18, 2008, contained thereon. The petition is granted, accordingly.

Further inquires regarding this decision may be directed to the undersigned at (571) 272-3222.

The application file is being forwarded Technology Center 3600, GAU 3627 for further processing including consideration of the response filed February 21, 2008.

Kenya A. McLaughlin

Kenya A. McLaughlin
Petitions Attorney
Office of Petitions

UNITED STATES PATENT AND TRADEMARK OFFICE

Commissioner for Patents
United States Patent and Trademark Office
P.O. Box 1450
Alexandria, VA 22313-1450
www.uspto.gov

JAN 11 2005

Paper No. 102904

Diane F. Covello
ALIX, YALE & RISTAS
750 Main Street
Hartford, CT 06103-2721

In re Application of:	:	
Howard A. Fromson et al	:	DECISION ON PETITION
Serial No.: 10/929,972	:	TO MAKE SPECIAL
Filed: August 30, 2004	:	
Attorney Docket No.: **FRO/184/US**	:	

This is a decision on the petition under 37 C.F.R. § 1.102(c), filed August 30, 2004, to make the above-identified application special.

Petitioner requests that the above-identified application be made special under the accelerated examination procedure set forth in the Manual of Patent Examining Procedure (M.P.E.P.) § 708.02, Section IV: Applicant's Age.

A grantable petition to make special under 37 C.F.R. § 1.102, and in accordance with M.P.E.P. § 708.02, Section IV, must include evidence showing that the applicant is sixty five (65) years of age or more. No fee is required for this petition.

The petition includes a statement from Howard A. Fromson stating that the he is sixty-five (65) years of age or more.

Accordingly, the petition is GRANTED.

After allowance, this application will be given priority for printing. See M.P.E.P. § 1309.

Inquiries regarding this decision should be directed to Hien Phan at (571) 272-1606.

Hien H. Phan, Special Programs Examiner
Technology Center 2800
Semiconductors, Electrical and Optical
Systems and Components

UNITED STATES PATENT AND TRADEMARK OFFICE

Commissioner for Patents
United States Patent and Trademark Office
P.O. Box 1450
Alexandria, VA 22313-1450
www.uspto.gov

SCHWEGMAN, LUNDBERG, WOESSNER & KLUTH, P.A.
P.O. BOX 2938
MINNEAPOLIS MN 55402

COPY MAILED

FEB 09 2007

OFFICE OF PETITIONS

ON PETITION

In re Application of :
Jerome M. Eldridge et al :
Application No. 10/929,986 :
Filed: August 30, 2004 :
Attorney Docket No. 1303.045US2 :

This is a decision on the petition, filed February 9, 2007, under 37 CFR 1.313(c)(2) to withdraw the above-identified application from issue after payment of the issue fee.

The petition is **GRANTED.**

The above-identified application is withdrawn from issue for consideration of a submission under 37 CFR 1.114 (request for continued examination). See 37 CFR 1.313(c)(2).

Petitioner is advised that the issue fee paid on December 26, 2006 in the above-identified application cannot be refunded. If, however, the above-identified application is again allowed, petitioner may request that it be applied towards the issue fee required by the new Notice of Allowance.[1]

Telephone inquiries should be directed to the undersigned at (571) 272-3208.

The examiner of Technology Center AU 2818 will consider the request for continued examination under 37 CFR 1.114.

Karen Creasy
Petitions Examiner
Office of Petitions

---

[1] The request to apply the issue fee to the new Notice may be satisfied by completing and returning the new Issue Fee Transmittal Form PTOL-85(b), which includes the following language thereon: "Commissioner for Patents is requested to apply the Issue Fee and Publication Fee (if any) or re-apply any previously paid issue fee to the application identified above." Petitioner is advised that, whether a fee is indicated as being due or not, the Issue Fee Transmittal Form **must** be completed and timely submitted to avoid abandonment. Note the language in bold text on the first page of the Notice of Allowance and Fee(s) Due (PTOL-85).

SPE RESPONSE FOR CERTIFICATE OF CORRECTION

Paper No.:20090209

DATE : March 5, 2009

TO SPE OF : ART UNIT 2893

SUBJECT : Request for Certificate of Correction on Patent No.: 10/929,989; Patent Number 7,078,812 B2

A response is requested with respect to the accompanying request for a certificate of correction.

Please complete this form and return with file, within 7 days to:
Certificates of Correction Branch - PK 3-910
Palm location 7590 - Tel. No. 305-8201

With respect to the change(s) requested, correcting Office and/or Applicant's errors, should the patent read as shown in the certificate of correction? No new matter should be introduced, nor should the scope or meaning of the claims be changed.

Thank You For Your Assistance

Certificates of Correction Branch

The request for issuing the above-identified correction(s) is hereby:
Note your decision on the appropriate box.

☒ Approved — All changes apply.

☐ Approved in Part — Specify below which changes do not apply.

☐ Denied — State the reasons for denial below.

Comments:

SPE: /Davienne Monbleau/ Art Unit 2893

PTOL-306 (Rev. 7/03) U.S. DEPARTMENT OF COMMERCE Patent and Trademark Office

SPE RESPONSE FOR CERTIFICATE OF CORRECTION

Paper No.:20090209

DATE : March 12, 2009

TO SPE OF : ART UNIT 2893

SUBJECT : Request for Certificate of Correction on Patent No.: 10/929,989; Patent Number 7,078,812 B2

A response is requested with respect to the accompanying request for a certificate of correction.

Please complete this form and return with file, within **7** days to:
Certificates of Correction Branch - PK 3-910
Palm location **7590** - Tel. No. 305-8201

With respect to the change(s) requested, correcting Office and/or Applicant's errors, should the patent read as shown in the certificate of correction? No new matter should be introduced, nor should the scope or meaning of the claims be changed.

Thank You For Your Assistance **Certificates of Correction Branch**

The request for issuing the above-identified correction(s) is hereby:
Note your decision on the appropriate box.

☒ **Approved** **All** changes apply.

☐ **Approved in Part** Specify below which changes **do not** apply.

☐ **Denied** State the reasons for denial below.

Comments:

SPE: /Davienne Monbleau/ **Art Unit** 2893

UNITED STATES PATENT AND TRADEMARK OFFICE

UNITED STATES DEPARTMENT OF COMMERCE
United States Patent and Trademark Office
Address: COMMISSIONER FOR PATENTS
P.O. Box 1450
Alexandria, Virginia 22313-1450
www.uspto.gov

SCHWEGMAN, LUNDBERG & WOESSNER, P.A.
P.O. BOX 2938
MINNEAPOLIS, MN 55402

Mail Date: 04/20/2010

Applicant	: Fernando Gonzalez	: DECISION ON REQUEST FOR
Patent Number	: 7659152	: RECALCULATION of PATENT
Issue Date	: 02/09/2010	: TERM ADJUSTMENT IN VIEW
Appliction No	: 10/930,001	: OF WYETH AND NOTICE OF INTENT TO
Filed	: 08/30/2004	: ISSUE CERTIFICATE OF CORRECTION
		:

The Request for Recalculation is **GRANTED** to the extent indicated.

The patent term adjustment has been determined to be **232** days. The USPTO will *sua sponte* issue a certificate of correction reflecting the amount of PTA days determined by the recalculation.

Prior to the issuance of the certificate of correction, the USPTO will afford patentee an opportunity to be heard and request reconsideration. Accordingly, patentee has **one month or thirty (30) days**, whichever is longer, to file a request for reconsideration of this patent term adjustment calculation. See 35 U.S.C. 154(b)(3)(B)(ii) and 37 CFR 1.322(a)(4). No extensions of time will be granted under 37 CFR 1.136.

Patentee should use document code PET.OP if electronically filing a request for reconsideration of this patent term adjustment calculation. The patentee must also include the information required by 37 CFR 1.705(b)(2) and the fee required by 37 CFR 1.18(e). If patentee does not file a timely request for reconsideration of this patent term adjustment calculation including the information required by 37 CFR 1.705(b)(2) and the fee required by 37 CFR 1.18(e), the USPTO will issue a certificate of correction reflecting the PTA determination noted above.

Patentee should be aware that in order to preserve the right to review in the United States District Court for the District of Columbia of the USPTO patent term adjustment determination, patentee must ensure that he or she also take the steps required under 35 U.S.C. 154(b)(4)(A) in a timely manner. Nothing in the request for recalculation should be construed as providing an alternative time frame for commencing a civil action under 35 U.S.C. 154(b)(4)(A).

Any questions concerning this decision should be directed to the Office of Patent Legal Administration at 571-272-7702.

UNITED STATES PATENT AND TRADEMARK OFFICE

Commissioner for Patents
United States Patent and Trademark Office
P.O. Box 1450
Alexandria, VA 22313-1450
www.uspto.gov

FITZPATRICK CELLA (MARVELL)
30 ROCKEFELLER PLAZA
NEW YORK NY 10112-3800

COPY MAILED
DEC 0 8 2008

In re Application of	:	
ELAYDI, Abdul et al.	:	
Application No. 10/930,004	:	DECISION ON PETITION
Filed: August 30, 2004	:	TO WITHDRAW
Attorney Docket No. **MP0539-166161**	:	FROM RECORD
	:	

This is a decision on the Request to Withdraw as attorney or agent under 37 C.F.R. § 1.36(b) or 37 C.F.R. § 10.40 filed October 31, 2008.

The request is **NOT APPROVED**.

A review of the file record indicates that Michael K. O'Neill does not have power of attorney in this patent application nor is there any statement or evidence of record of employment in or otherwise being engaged in the proceedings in this patent application. Accordingly, the request to withdraw under 37 C.F.R. § 1.36(b) is not applicable.

All future communications from the Office will continue to be directed to the above-listed address until otherwise properly notified by the applicant.

Telephone inquires concerning this decision should be directed to Tredelle Jackson at 571-272-2783.

Tredelle D. Jackson
Paralegal Specialist
Office of Petitions

cc: **MARVELL PATENT DEPARTMENT C/O KELVIN VIVIAN**
5488 MARVELL LANE
SANTA CLARA CA 95054

UNITED STATES PATENT AND TRADEMARK OFFICE

UNITED STATES DEPARTMENT OF COMMERCE
United States Patent and Trademark Office
Address: COMMISSIONER FOR PATENTS
P.O. Box 1450
Alexandria, Virginia 22313-1450
www.uspto.gov

TAROLLI, SUNDHEIM, COVELL & TUMMINO L.L.P.
1300 EAST NINTH STREET, SUITE 1700
CLEVELAND, OH 44114

Mail Date: 04/26/2010

Applicant	: Joseph L. Erdman	: DECISION ON REQUEST FOR
Patent Number	: 7616757	: RECALCULATION of PATENT
Issue Date	: 11/10/2009	: TERM ADJUSTMENT IN VIEW
Application No	: 10/930,006	: OF WYETH AND NOTICE OF INTENT TO
Filed	: 08/30/2004	: ISSUE CERTIFICATE OF CORRECTION
		:

The Request for Recalculation is **GRANTED** to the extent indicated.

The patent term adjustment has been determined to be **1472** days. The USPTO will *sua sponte* issue a certificate of correction reflecting the amount of PTA days determined by the recalculation.

Prior to the issuance of the certificate of correction, the USPTO will afford patentee an opportunity to be heard and request reconsideration. Accordingly, patentee has **one month or thirty (30) days**, whichever is longer, to file a request for reconsideration of this patent term adjustment calculation. See 35 U.S.C. 154(b)(3)(B)(ii) and 37 CFR 1.322(a)(4). No extensions of time will be granted under 37 CFR 1.136.

Patentee should use document code PET.OP if electronically filing a request for reconsideration of this patent term adjustment calculation. The patentee must also include the information required by 37 CFR 1.705(b)(2) and the fee required by 37 CFR 1.18(e). If patentee does not file a timely request for reconsideration of this patent term adjustment calculation including the information required by 37 CFR 1.705(b)(2) and the fee required by 37 CFR 1.18(e), the USPTO will issue a certificate of correction reflecting the PTA determination noted above.

Patentee should be aware that in order to preserve the right to review in the United States District Court for the District of Columbia of the USPTO patent term adjustment determination, patentee must ensure that he or she also take the steps required under 35 U.S.C. 154(b)(4)(A) in a timely manner. Nothing in the request for recalculation should be construed as providing an alternative time frame for commencing a civil action under 35 U.S.C. 154(b)(4)(A).

Any questions concerning this decision should be directed to the Office of Patent Legal Administration at 571-272-7702.

UNITED STATES PATENT AND TRADEMARK OFFICE

UNITED STATES DEPARTMENT OF COMMERCE
United States Patent and Trademark Office
Address: COMMISSIONER FOR PATENTS
P.O. Box 1450
Alexandria, Virginia 22313-1450
www.uspto.gov

Woodard, Emhardt, Moriarty, McNett & Henry LLP
111 Monument Circle, Suite 3700
Indianapolis, IN 46204-5137

Mail Date: 05/20/2010

Applicant	: Brian R. Law	: DECISION ON REQUEST FOR
Patent Number	: 7654418	: RECALCULATION of PATENT
Issue Date	: 02/02/2010	: TERM ADJUSTMENT IN VIEW
Application No	: 10/930,010	: OF WYETH AND NOTICE OF INTENT TO
Filed	: 08/30/2004	: ISSUE CERTIFICATE OF CORRECTION
		:

The Request for Recalculation is **GRANTED** to the extent indicated.

The patent term adjustment has been determined to be **1125** days. The USPTO will *sua sponte* issue a certificate of correction reflecting the amount of PTA days determined by the recalculation.

Prior to the issuance of the certificate of correction, the USPTO will afford patentee an opportunity to be heard and request reconsideration. Accordingly, patentee has **one month or thirty (30) days**, whichever is longer, to file a request for reconsideration of this patent term adjustment calculation. See 35 U.S.C. 154(b)(3)(B)(ii) and 37 CFR 1.322(a)(4). No extensions of time will be granted under 37 CFR 1.136.

Patentee should use document code PET.OP if electronically filing a request for reconsideration of this patent term adjustment calculation. The patentee must also include the information required by 37 CFR 1.705(b)(2) and the fee required by 37 CFR 1.18(e). If patentee does not file a timely request for reconsideration of this patent term adjustment calculation including the information required by 37 CFR 1.705(b)(2) and the fee required by 37 CFR 1.18(e), the USPTO will issue a certificate of correction reflecting the PTA determination noted above.

Patentee should be aware that in order to preserve the right to review in the United States District Court for the District of Columbia of the USPTO patent term adjustment determination, patentee must ensure that he or she also take the steps required under 35 U.S.C. 154(b)(4)(A) in a timely manner. Nothing in the request for recalculation should be construed as providing an alternative time frame for commencing a civil action under 35 U.S.C. 154(b)(4)(A).

Any questions concerning this decision should be directed to the Office of Patent Legal Administration at 571-272-7702.

UNITED STATES PATENT AND TRADEMARK OFFICE

COMMISSIONER FOR PATENTS
UNITED STATES PATENT AND TRADEMARK OFFICE
P.O. BOX 1450
ALEXANDRIA, VA 22313-1450
www.uspto.gov

COPY MAILED

MAY 07 2008

OFFICE OF PETITIONS

ULMER & BERNE LLP
ATTN: DIANE BELL
600 VINE STREET
SUITE 2800
CINCINNATI, OH 45202

In re Application of :
Scott R. Gilbert :
Application No. 10/930,027 : ON PETITION
Filed: August 30, 2004 :
Attorney Docket No. AROOP0137USA :

This is a decision on the petition, filed December 26, 2007, to revive the above-identified application under the provisions of 37 CFR 1.137(b).

The petition is **GRANTED**.

The above-identified application became abandoned for failure to reply in a timely manner to a Notice of Non-Compliance Amendment mailed July 6, 2007. On December 26, 2007, the present petition was filed. A Notice of Abandonment was subsequently mailed on March 20, 2008.

The petition satisfies the requirements of 37 CFR 1.137(b) in that petitioner has supplied (1) the reply in the form of amendment; (2) the petition fee of $770; and (3) an adequate statement of unintentional delay.

The application file does not indicate a change of address has been filed in this case, although the address given on the petition differs from the address of record. If appropriate a change of address should be filed in this case in accordance with MPEP 601.03. A courtesy copy of this decision is being mailed to the address noted on the petition. However, until otherwise instructed, all future correspondence regarding this application will be mailed solely to the address of record.

The application file is being forwarded to Technology Center Art Unit 3644 for consideration of the amendment filed December 26, 2007.

Telephone inquiries concerning this decision may be directed to the undersigned at (571) 272-3204. All other inquiries regarding this application should be directed to the Technology Center.

Sherry D. Brinkley
Petitions Examiner
Office of Petitions

cc: GORDON D. KINDER
ULMER & BERNE LLP
1660 WEST 2ND ST., SUITE 1100
CLEVELAND, OH 44113-1448

UNITED STATES PATENT AND TRADEMARK OFFICE

Commissioner for Patents
United States Patent and Trademark Office
P.O. Box 1450
Alexandria, VA 22313-1450
www.uspto.gov

EDELL, SHAPIRO & FINNAN, LLC
1901 RESEARCH BOULEVARD
SUITE 400
ROCKVILLE MD 20850

MAILED

MAY 20 2009

OFFICE OF PETITIONS

In re Application of	:	
Michael L. Robinson, et al.	:	
Application No. 10/930,089	:	ON PETITION
Filed: August 31, 2004	:	
Attorney Docket No. 0370.0733C	:	

This is a decision on the petition under the unintentional provisions of 37 CFR 1.137(b), filed March 12, 2009, to revive the above-identified application.

The petition is **GRANTED**.

The application became abandoned for failure to timely file a reply within the meaning of 37 CFR 1.113 to the final Office action of November 14, 2006. The proposed reply required for consideration of a petition to revive must be a Notice of Appeal (and appeal fee required by 37 CFR 41.20(b)(2), an amendment that *prima facie* places the application in condition for allowance, a Request for Continued Examination and submission (37 CFR 1.114), or the filing of a continuing application under 37 CFR 1.53(b). See MPEP 711.03(c)(III)(A)(2). No extensions of time pursuant to the provisions of 37 CFR 1.136(a) were obtained. Accordingly, the date of abandonment of this application is February 15, 2007. The Notice of Abandonment was mailed May 30, 2007.

The petition satisfies the requirements of 37 CFR 1.137(b) in that petitioner has supplied (1) the reply in the form of a continuing application under 37 CFR 1.53(b); (2) the petition fee of $1,620; and (3) a proper statement of unintentional delay.

This application is being revived solely for purposes of continuity. As continuity has been established by this decision, the application is again abandoned in favor of continuing application No. 11/403,110 filed March 12, 2009.

Telephone inquiries concerning this decision should be directed to Terri Williams at (571) 272-2991.

Chris Bottorff
Petitions Examiner
Office of Petitions

UNITED STATES PATENT AND TRADEMARK OFFICE

Commissioner for Patents
United States Patent and Trademark Office
P.O. Box 1450
Alexandria, VA 22313-1450
www.uspto.gov

DILLON & YUDELL LLP
8911 NORTH CAPITAL OF TEXAS HWY
SUITE 2110
AUSTIN TX 78759

COPY MAILED

JUL 3 1 2008

In re Application of	:	
Prabhakar et al.	:	
Application No.: 10/930092	:	DECISION ON
Filing or 371(c) Date: 08/31/2004	:	PETITION
Attorney Docket Number: SILA0012	:	

This is a decision in response to the Petition to Withdraw Holding of Abandonment, filed June 12, 2007, and on the Renewed Petition to Withdraw Holding of Abandonment Under 37 CFR § 1.181, filed June 24, 2008. The delay in treating the petition(s) is regretted.

This Petition(s) is hereby **granted**.

Background

The above-identified application became abandoned for failure to timely and properly reply to the Notice of Allowance and Issue Fee Due, mailed February 7, 2007. The Notice set a non-extendable three (3) month period for reply. Applicant filed the issue fee on April 3, 2007; however, Office records indicated insufficient funds in Applicant's deposit account. No complete and proper response having been received, the application became abandoned on May 8, 2007. A Notice of Abandonment was mailed June 6, 2007.

Applicant's Assertion

Applicant files the instant petition and asserts that a timely reply to the Notice, to wit, the issue and publication fees, were filed on April 3, 2007. In support of this assertion, Applicant files a copy of the issue fee transmittal form, and a copy of his Deposit account statement showing the balance in Applicant's account on April 3, 2007.

A review of Office records confirms that Applicant's deposit account contained sufficient funds for the issue and publication fee payments on April 3, 2007.

It is also noted that Applicant filed Replacement Drawing Sheets with the issue fee on April 3, 2007. The Examiner has reviewed the drawings and notes that they are acceptable.

In view of the foregoing, the petition is granted. The holding of abandonment is hereby withdrawn.

The application will be referred to the Office of Data Management for processing into a patent in the normal course of business.

Telephone inquiries concerning this Decision only should be directed to the undersigned at (571) 272-3232.

Derek L. Woods
Attorney
Office of Petitions

PART B - FEE(S) TRANSMITTAL

Complete and send this form, together with applicable fee(s), to: Mail Mail Stop ISSUE FEE
Commissioner for Patents
P.O. Box 1450
Alexandria, Virginia 22313-1450
or Fax (571)-273-2885

INSTRUCTIONS: This form should be used for transmitting the ISSUE FEE and PUBLICATION FEE (if required). Blocks 1 through 5 should be completed where appropriate. All further correspondence including the Patent, advance orders and notification of maintenance fees will be mailed to the current correspondence address as indicated unless corrected below or directed otherwise in Block 1, by (a) specifying a new correspondence address; and/or (b) indicating a separate "FEE ADDRESS" for maintenance fee notifications.

CURRENT CORRESPONDENCE ADDRESS (Note: Use Block 1 for any change of address)

42640 7590 02/07/2007

DILLON & YUDELL LLP
8911 NORTH CAPITAL OF TEXAS HWY
SUITE 2110
AUSTIN, TX 78759

Note: A certificate of mailing can only be used for domestic mailings of the Fee(s) Transmittal. This certificate cannot be used for any other accompanying papers. Each additional paper, such as an assignment or formal drawing, must have its own certificate of mailing or transmission.

Certificate of Mailing or Transmission
I hereby certify that this Fee(s) Transmittal is being deposited with the United States Postal Service with sufficient postage for first class mail in an envelope addressed to the Mail Stop ISSUE FEE address above, or being facsimile transmitted to the USPTO (571) 273-2885, on the date indicated below.

(Depositor's name)
07/31/2008 CKHLOK 00000016 503083 10930092
(Signature)
01 FC:1501 1400.00 DA
02 FC:1505 300.00 DA
(Date)

APPLICATION NO.	FILING DATE	FIRST NAMED INVENTOR	ATTORNEY DOCKET NO.	CONFIRMATION NO.
10/930,092	08/31/2004	Sheela Prabhakar	SILA0012	6712

TITLE OF INVENTION: METHOD AND APPARATUS FOR DETECTING SUBSCRIBER ALERTING SIGNAL TONES AND CUSTOMER PREMISES EQUIPMENT ALERTING SIGNAL TONES TO NON-ECHO CANCELING MODEMS

APPLN. TYPE	SMALL ENTITY	ISSUE FEE DUE	PUBLICATION FEE DUE	PREV. PAID ISSUE FEE	TOTAL FEE(S) DUE	DATE DUE
nonprovisional	NO	$1400	$300	$0	$1700	05/07/2007

EXAMINER	ART UNIT	CLASS-SUBCLASS
SINGH, RAMNANDAN P	2614	379-406010

1. Change of correspondence address or indication of "Fee Address" (37 CFR 1.363).
☐ Change of correspondence address (or Change of Correspondence Address form PTO/SB/122) attached.
☐ "Fee Address" indication (or "Fee Address" Indication form PTO/SB/47; Rev 03-02 or more recent) attached. **Use of a Customer Number is required.**

2. For printing on the patent front page, list
(1) the names of up to 3 registered patent attorneys or agents OR, alternatively,
(2) the name of a single firm (having as a member a registered attorney or agent) and the names of up to 2 registered patent attorneys or agents. If no name is listed, no name will be printed.

1 Antony P. Ng
2 Dillon & Yudell LLP
3

3. ASSIGNEE NAME AND RESIDENCE DATA TO BE PRINTED ON THE PATENT (print or type)

PLEASE NOTE: Unless an assignee is identified below, no assignee data will appear on the patent. If an assignee is identified below, the document has been filed for recordation as set forth in 37 CFR 3.11. Completion of this form is NOT a substitute for filing an assignment.

(A) NAME OF ASSIGNEE: Silicon Laboratories

(B) RESIDENCE: (CITY and STATE OR COUNTRY): Austin, Texas

Please check the appropriate assignee category or categories (will not be printed on the patent): ☐ Individual ☒ Corporation or other private group entity ☐ Government

4a. The following fee(s) are submitted:
☒ Issue Fee
☒ Publication Fee (No small entity discount permitted)
☒ Advance Order - # of Copies 2

4b. Payment of Fee(s): **(Please first reapply any previously paid issue fee shown above)**
☐ A check is enclosed.
☐ Payment by credit card. Form PTO-2038 is attached.
☒ The Director is hereby authorized to charge the required fee(s), any deficiency, or credit any overpayment, to Deposit Account Number 50-3083 (enclose an extra copy of this form).

5. Change in Entity Status (from status indicated above)
☐ a. Applicant claims SMALL ENTITY status. See 37 CFR 1.27.
☐ b. Applicant is no longer claiming SMALL ENTITY status. See 37 CFR 1.27(g)(2).

NOTE: The Issue Fee and Publication Fee (if required) will not be accepted from anyone other than the applicant; a registered attorney or agent; or the assignee or other party in interest as shown by the records of the United States Patent and Trademark Office.

Authorized Signature [signature] Date April 3, 2007

Typed or printed name Antony P. Ng Registration No. 43,427

This collection of information is required by 37 CFR 1.311. The information is required to obtain or retain a benefit by the public which is to file (and by the USPTO to process) an application. Confidentiality is governed by 35 U.S.C. 122 and 37 CFR 1.14. This collection is estimated to take 12 minutes to complete, including gathering, preparing, and submitting the completed application form to the USPTO. Time will vary depending upon the individual case. Any comments on the amount of time you require to complete this form and/or suggestions for reducing this burden, should be sent to the Chief Information Officer, U.S. Patent and Trademark Office, U.S. Department of Commerce, P.O. Box 1450, Alexandria, Virginia 22313-1450. DO NOT SEND FEES OR COMPLETED FORMS TO THIS ADDRESS. SEND TO: Commissioner for Patents, P.O. Box 1450, Alexandria, Virginia 22313-1450.

Under the Paperwork Reduction Act of 1995, no persons are required to respond to a collection of information unless it displays a valid OMB control number.

UNITED STATES PATENT AND TRADEMARK OFFICE

Commissioner for Patents
United States Patent and Trademark Office
P.O. Box 1450
Alexandria, VA 22313-1450
www.uspto.gov

LYNN L. AUGSPURGER
IBM CORPORATION
P386
2455 SOUTH ROAD
POUGHKEEPSIE, NY 12601

COPY MAILED

MAR 14 2007

OFFICE OF PETITIONS

In re Application of	:	
Eric M. Schwarz	:	
Application No. 10/930,129	:	DECISION ON PETITION
Filed: August 31, 2004	:	TO MAKE SPECIAL UNDER
Attorney Docket No. POU920040018US1	:	37 CFR 1.102(c)(1)
	:	

This is a decision on the petition under 37 CFR 1.102(c)(1), filed January 19, 2007, to make the above-identified application special based on applicant's age as set forth in M.P.E.P. § 708.02, Section IV.

The petition is **GRANTED**.

A grantable petition to make an application special under 37 CFR 1.102(c)(1) and MPEP § 708.02, Section IV: Applicant's Age must be accompanied by evidence showing that at least one of the applicants is 65 years of age, or more, such as a birth certificate or a statement by applicant. No fee is required

The instant petition includes a declaration statement signed by applicant Martin S. Schookler. Accordingly, the above-identified application has been accorded "special" status.

Telephone inquiries concerning this decision should be directed to undersigned at 571-272-162.

All other inquiries concerning either the examination or status of the application should be directed to the Technology Center.

The application is being forwarded to the Technology Center Art Unit 2193 for action on the merits commensurate with this decision.

April M. Wise
Petitions Examiner
Office of Petitions

UNITED STATES PATENT AND TRADEMARK OFFICE

COMMISSIONER FOR PATENTS
UNITED STATES PATENT AND TRADEMARK OFFICE
P.O. BOX 1450
ALEXANDRIA, VA 22313-1450
www.uspto.gov

KLARQUIST SPARKMAN LLP
121 S.W. SALMON STREET
SUITE 1600
PORTLAND, OR 97204

MAIL

NOV 0 8 2004

DIRECTOR OFFICE
TECHNOLOGY CENTER 2600

In re Application of
White, et al.
Application No. 10/930,134
Filed: August 30 2004
For: VIDEO ON DEMAND METHODS AND SYSTEMS

DECISION ON PETITION TO MAKE SPECIAL

This is a decision on the petition filed August 30, 2004 under Manual of Patent Examination Procedure §708.02, VIII requesting accelerated examination.

The petition under Manual of Patent Examination Procedure §708.02, VIII, must:
(1) be filed prior to receiving any examination by the examiner,
(2) be accompanied by the required fee- $130,
(3) the claims should be directed to a single invention (if it is determined that the claims pertain to more than one invention, then applicant will have to make an election without traverse or forfeit accelerated examination status),
(4) state that a pre-examination search was made, and fully discuss the search method employed, such as classes and subclasses searched, publications, Chemical abstracts, patents, etc. A search made by a foreign patent office satisfies this requirement,
(5) be accompanied by a copy of each of the references most closely related to the subject matter encompassed by the claims if said references are not already of record,
(6) fully discuss the references, pointing out with the particularity required by 37 C.F.R. §1.111 (b) and (c), how the claimed subject matter is patentable over the references.

The petitioner meets all the above-listed requirements. Accordingly, the petition is **GRANTED**.

The application will retain its special status throughout its entire prosecution, including any appeal to the Board of Patent Appeals and Interferences, subject only to diligent prosecution by the applicant. The application file is being forwarded to the examiner for appropriate action in due course.

Kenneth A. Wieder
Special Program Examiner
Technology Center 2600
Communications
571-272-2986

UNITED STATES PATENT AND TRADEMARK OFFICE

Commissioner for Patents
United States Patent and Trademark Office
P.O. Box 1450
Alexandria, VA 22313-1450
www.uspto.gov

E I DU PONT DE NEMOURS AND COMPANY
LEGAL PATENT RECORDS CENTER
BARLEY MILL PLAZA 25/1122B
4417 LANCASTER PIKE
WILMINGTON DE 19805

COPY MAILED

JAN 24 2008

OFFICE OF PETITIONS

In re Application of	:
Vogel et al.	:
Application No. 10/930,136	: DECISION ON PETITION
Filed: October 7, 2004	: UNDER 37 CFR 1.78(a)(3)
Attorney Docket No. AD7045USNA	: UNDER 37 CFR 1.78(a)(6)

This is a decision on the petitions under 37 CFR §§ 1.78(a)(3) and 1.78(a)(6), filed November 20, 2007, to accept an unintentionally delayed claim under 35 U.S.C. §§120 and 119(e) for the benefit of the prior-filed applications set forth in the concurrently filed amendment.

The petition is **DISMISSED**.

A petition for acceptance of a claim for late priority under 37 CFR §§ 1.78(a)(3) and 1.78(a)(6) is only applicable to those applications filed on or after November 29, 2000. Further, the petition is appropriate only after the expiration of the period specified in 37 CFR §§ 1.78(a)(2)(ii) and 1.78(a)(5)(ii). In addition, the petition under 37 CFR §§ 1.78(a)(3) and 1.78(a)(6) must be accompanied by:

(1) the reference required by 35 U.S.C. §§ 120 and 119(e) and 37 CFR §§ 1.78(a)(2)(i) and 1.78(a)(5)(i) of the prior-filed application, unless previously submitted;
(2) the surcharge set forth in § 1.17(t); and
(3) a statement that the entire delay between the date the claim was due under 37 CFR §§ 1.78(a)(2)(ii) and 1.78(a)(5)(ii) and the date the claim was filed was unintentional. The Commissioner may require additional where there is a question whether the delay was unintentional.

The instant petition does not comply with item (1) above.

A reference to add the prior-filed applications on page one following the first sentence of the specification has been included in a concurrently filed amendment. However, the amendment is not acceptable as drafted since it improperly incorporates by reference the prior-filed applications. Petitioner's attention is directed to Dart Industries v. Banner, 636 F.2d 684, 207 USPQ 273 (C.A.D.C. 1980), where the court drew a distinction between a permissible 35 U.S.C. § 120 statement and the impermissible introduction of new matter by way of incorporation by reference in a 35 U.S.C. § 120 statement. The court specifically stated:

> Section 120 merely provides a mechanism whereby an application becomes entitled to benefit of the filing date of an earlier application disclosing the same subject matter. Common subject matter must be disclosed, in both applications, either specifically or by an express incorporation-by-reference of prior disclosed subject matter. Nothing in section 120 itself operates to carry forward any disclosure from an earlier application. In re deSeversky, supra at 674, 177 USPQ at 146-147. Section 120 contains no magical disclosure-augmenting powers able to pierce new matter barriers. It cannot, therefore, "limit" the absolute and express prohibition against new matter contained in section 251.

In order for the incorporation by reference statement to be effective as a proper safeguard against the omission of a portion of a prior application, the incorporation by reference statement must be included in the specification-as-filed, or in an amendment specifically referred to in an oath or declaration executing the application. *See* In re deSeversky, *supra*. *Note also* MPEP 201.06(c).

Accordingly, before the petition under 37 CFR 1.78(a)(3) and 1.78(a)(6) can be granted, a substitute amendment[1] deleting the incorporation by reference statement, along with a renewed petition under 37 CFR 1.78(a)(3) and 1.78(a)(6), is required. A new petition fee is not required.

Further correspondence with respect to this matter should be addressed as follows:

By mail: Mail Stop PETITIONS
Commissioner for Patents
Post Office Box 1450
Alexandria, VA 22313-1450

By hand: Customer Window located at:
U.S. Patent and Trademark Office
Customer Service Window Randolph Building
401 Dulany Street
Alexandria, VA 22314

By fax: (571) 273-8300
ATTN: Office of Petitions

Any questions concerning this matter may be directed to the undersigned at (571) 272-3206.

Liana Walsh
Petitions Examiner
Office of Petitions

[1] *Note* 37 CFR 1.121

UNITED STATES PATENT AND TRADEMARK OFFICE

Commissioner for Patents
United States Patent and Trademark Office
P.O. Box 1450
Alexandria, VA 22313-1450
www.uspto.gov

APPLICATION NUMBER	FILING/RECEIPT DATE	FIRST NAMED APPLICANT	ATTORNEY DOCKET NUMBER
10/930,142	08/30/2004	Zhongyi Xia	2269-3851.1US 98-1107.01/

TRASK BRITT
P.O. BOX 2550
SALT LAKE CITY UT 84110

DATE MAILED: August 31, 2007

DECISION DISMISSING PETITION UNDER 37 CFR 1.138(d)
The declaration of express abandonment will not be recognized

This is in response to the petition under 37 CFR 1.138(d) filed on August 13, 2007, requesting for a refund of any previously paid search fee and excess claims fee in the above-identified application.

The petition is dismissed.

The express abandonment will **not** be recognized for the reason(s) indicated below:

- ☐ The petition was not filed in sufficient time to permit the appropriate officials to recognize the abandonment before an examination has been made of the application. See 37 CFR 1.138(d).
- ☐ The application is not an application filed under 35 U.S.C. 111(a) on or after December 8, 2004.
- ☐ The petition was not signed by a party authorized by 37 CFR 1.33(b)(1), (3) or (4).
- ☑ The petition for express abandonment under 1.138(d) is dismissed because the applicant did not pay any search fee and excess claims fees in the above-identified application.

Any inquiries concerning this decision should be directed to the Pre-Grant Publication Division at (703) 305-4283.

Barbara J. Debnam
Pre-Grant Publication Division

UNITED STATES PATENT AND TRADEMARK OFFICE

Commissioner for Patents
United States Patent and Trademark Office
P.O. Box 1450
Alexandria, VA 22313-1450
www.uspto.gov

STOEL RIVES LLP - SLC
201 SOUTH MAIN STREET, SUITE 1100
ONE UTAH CENTER
SALT LAKE CITY, UT 84111

MAILED

JUL 01 2010

OFFICE OF PETITIONS

In re Application of :
David T. Hawkes, et al. :
Application No. 10/930,152 : ON PETITION
Filed: August 30, 2004 :
Attorney Docket No.: 40682/229 :

This is a decision on the petition, filed May 10, 2010, to revive the above-identified application under the provisions of 37 CFR 1.137(b).

The petition is **GRANTED**.

This application became abandoned for failure to submit corrected formal drawings on or before April 12, 2010 as required by the Notice of Allowability mailed January 12, 2010. A Notice of Abandonment was mailed on April 27, 2010. In response, on May 10, 2010, the present petition was filed.

The petition satisfies the requirements of 37 CFR 1.137(b) in that petitioner has supplied (1) the reply in the form of corrected formal drawings, (2) the petition fee of $810; and (3) an adequate statement of unintentional delay.

The application is being referred to the Office of Data Management to oversee the review of the drawing filed May 10, 2010 and for processing into a patent.

Telephone inquires related to this decision may be directed to the undersigned at (571) 272-3204. Telephone inquiries related to processing as a patent should be directed to (571) 272-4200

Sherry D. Brinkley
Petitions Examiner
Office of Petitions

UNITED STATES PATENT AND TRADEMARK OFFICE

UNITED STATES DEPARTMENT OF COMMERCE
United States Patent and Trademark Office
Address: COMMISSIONER FOR PATENTS
P.O. Box 1450
Alexandria, Virginia 22313-1450
www.uspto.gov

SCHWEGMAN, LUNDBERG & WOESSNER, P.A.
P.O. BOX 2938
MINNEAPOLIS, MN 55402

Mail Date: 04/20/2010

Applicant	: Leonard Forbes	: DECISION ON REQUEST FOR
Patent Number	: 7602049	: RECALCULATION of PATENT
Issue Date	: 10/13/2009	: TERM ADJUSTMENT IN VIEW
Appliction No	: 10/930,158	: OF WYETH AND NOTICE OF INTENT TO
Filed	: 08/31/2004	: ISSUE CERTIFICATE OF CORRECTION
		:

The Request for Recalculation is **GRANTED** to the extent indicated.

The patent term adjustment has been determined to be **0** days. The USPTO will *sua sponte* issue a certificate of correction reflecting the amount of PTA days determined by the recalculation.

Prior to the issuance of the certificate of correction, the USPTO will afford patentee an opportunity to be heard and request reconsideration. Accordingly, patentee has **one month or thirty (30) days**, whichever is longer, to file a request for reconsideration of this patent term adjustment calculation. See 35 U.S.C. 154(b)(3)(B)(ii) and 37 CFR 1.322(a)(4). No extensions of time will be granted under 37 CFR 1.136.

Patentee should use document code PET.OP if electronically filing a request for reconsideration of this patent term adjustment calculation. The patentee must also include the information required by 37 CFR 1.705(b)(2) and the fee required by 37 CFR 1.18(e). If patentee does not file a timely request for reconsideration of this patent term adjustment calculation including the information required by 37 CFR 1.705(b)(2) and the fee required by 37 CFR 1.18(e), the USPTO will issue a certificate of correction reflecting the PTA determination noted above.

Patentee should be aware that in order to preserve the right to review in the United States District Court for the District of Columbia of the USPTO patent term adjustment determination, patentee must ensure that he or she also take the steps required under 35 U.S.C. 154(b)(4)(A) in a timely manner. Nothing in the request for recalculation should be construed as providing an alternative time frame for commencing a civil action under 35 U.S.C. 154(b)(4)(A).

Any questions concerning this decision should be directed to the Office of Patent Legal Administration at 571-272-7702.

UNITED STATES PATENT AND TRADEMARK OFFICE

Commissioner for Patents
United States Patent and Trademark Office
P.O. Box 1450
Alexandria, VA 22313-1450
www.uspto.gov

COPY MAILED

AUG 0 1 2006

OFFICE OF PETITIONS

J. Henry Muetterties
7796 S. Datura
Littleton, CO 80120

In re Application of	:	
David Paul Duncan	:	
Application No. 10/930,173	:	DECISION ON PETITION
Filed: August 30, 2004	:	TO WITHDRAW
Attorney Docket No. e20040801	:	FROM RECORD
	:	

This is a decision on the Request to Withdraw as attorney or agent of record under 37 C.F.R. § 1.36(b), filed January 9, 2006.

The request is **NOT APPROVED**.

A grantable request to withdraw as attorney/agent of record must be signed by every attorney/agent seeking to withdraw or contain a clear indication that one attorney is signing on behalf of another/others. A request to withdraw will not be approved unless at least 30 (thirty) days would remain between the date of approval and the later of the expiration date of a time to file a response or the expiration date of the maximum time period which can be extended under 37 C.F.R. § 1.136(a).

The Office cannot approve the request at this time since the reasons provided do not meet any of the conditions under the mandatory or permissive categories enumerated in 37 CFR 10.40. Section 10.40 of Title 37 of the Code of Federal Regulation states, "[a] practitioner shall not withdraw from employment in a proceeding before the Office without permission from the Office[.]" More specifically, 37 CFR 10.40 states, "[i]f paragraph (b) of this section is not applicable, a practitioner may not request permission to withdraw in matter pending before the Office unless such request or such withdrawal is" for one the permissive reasons listed in 37 CFR 10.40(c). The reasons set forth in the request, **no longer representing client**, do not meet any the conditions set forth in 37 CFR 10.40.

All future communications from the Office will continue to be directed to the above-listed address until otherwise notified by applicant.

Telephone inquiries concerning this decision should be directed to Terri Williams at 571-272-2991.

David Bucci
Petitions Examiner
Office of Petitions

cc: encryptX Corporation
Attn: David Duncan
7420 E. Dry Creek Parkway
Longmont, CO 80503

UNITED STATES PATENT AND TRADEMARK OFFICE

Commissioner for Patents
United States Patent and Trademark Office
P.O. Box 1450
Alexandria, VA 22313-1450
www.uspto.gov

IP STRATEGY GROUP PC
P.O. BOX 700640
SAN JOSE, CA 95170-0640

COPY MAILED

JUN 2 5 2007

OFFICE OF PETITIONS

In re Application of	:	
RASHID, Abbas	:	
Application No. 10/930,175	:	DECISION ON PETITION
Filed: August 31, 2004	:	TO WITHDRAW
Attorney Docket No. **RZMI-P121**	:	FROM RECORD

This is a decision on the Request to Withdraw as attorney or agent of record under 37 C.F.R. § 1.36(b), filed August 1, 2006.

The request is **NOT APPROVED**.

A grantable request to withdraw as attorney/agent of record must be signed by every attorney/agent seeking to withdraw or contain a clear indication that one attorney is signing on behalf of another/others. A request to withdraw will not be approved unless at least 30 (thirty) days would remain between the date of approval and the later of the expiration date of a time to file a response or the expiration date of the maximum time period which can be extended under 37 C.F.R. § 1.136(a).

The Office cannot approve the request at this time since the reasons provided do not meet any of the conditions under the mandatory or permissive categories enumerated in 37 CFR 10.40. Section 10.40 of Title 37 of the Code of Federal Regulation states, "[a] practitioner shall not withdraw from employment in a proceeding before the Office without permission from the Office[.]" More specifically, 37 CFR 10.40 states, "[i]f paragraph (b) of this section is not applicable, a practitioner may not request permission to withdraw in matter pending before the Office unless such request or such withdrawal is" for one the permissive reasons listed in 37 CFR 10.40(c). The reasons set forth in the request do not meet any of the conditions set forth in 37 CFR 10.40.

In order to request or take action in a patent matter, the assignee must establish its ownership of the patent to the satisfaction of the Director. In this regard, a Statement under 37 CFR 3.73(b) must have either: (i) documentary evidence of a chain of title from the original owner to the assignee (*e.g.*, copy of an executed assignment), and a statement affirming that the documentary evidence of the chain of title from the original owner to the assignee was or concurrently is being submitted for recordation pursuant to § 3.11; or (ii) a statement specifying where documentary evidence of a chain of title from the original owner to the assignee is recorded in the assignment

records of the Office (*e.g.*, reel and frame number). The power of attorney filed on December 5, 2006 does not include one of the above two options.

All future communications from the Office will continue to be directed to the above-listed address until otherwise notified by applicant.

Telephone inquiries concerning this decision should be directed to the undersigned at 571-272-7253.

Monica A. Graves
Petitions Examiner
Office of Petitions

cc: **RAZA MICROELECTRONICS, INC.**
LEGAL DEPARTMENT
18920 FORGE DRIVE
CUPERTINO, CA 95014-0701

UNITED STATES PATENT AND TRADEMARK OFFICE

Commissioner for Patents
United States Patent and Trademark Office
P.O. Box 1450
Alexandria, VA 22313-1450
www.uspto.gov

IPSG, P.C.
P.O. BOX 700640
SAN JOSE CA 95170-0640

COPY MAILED

FEB 21 2007

OFFICE OF PETITIONS

In re Application of
David T. Hass, et al.
Application No. 10/930,179
Filed: August 31, 2004
Attorney Docket No. RZMI-P118

DECISION ON PETITION
TO WITHDRAW
FROM RECORD

This is a decision on the Request to Withdraw as attorney or agent of record under 37 C.F.R. § 1.36(b) filed August 1, 22006.

The request is **NOT APPROVED**.

A grantable request to withdraw as attorney/agent of record must be signed by every attorney/agent seeking to withdraw or contain a clear indication that one attorney is signing on behalf of another/others. A request to withdraw will not be approved unless at least 30 (thirty) days would remain between the date of approval and the later of the expiration date of a time to file a response or the expiration date of the maximum time period which can be extended under 37 C.F.R. § 1.136(a).

The Office cannot approve the request at this time since the reasons provided do not meet any of the conditions under the mandatory or permissive categories enumerated in 37 CFR 10.40. Section 10.40 of Title 37 of the Code of Federal Regulation states, "[a] practitioner shall not withdraw from employment in a proceeding before the Office without permission from the Office[.]" More specifically, 37 CFR 10.40 states, "[i]f paragraph (b) of this section is not applicable, a practitioner may not request permission to withdraw in matter pending before the Office unless such request or such withdrawal is" for one the permissive reasons listed in 37 CFR 10.40(c). The reasons set forth in the request, "the assignee wishes to terminate representation by myself and the attorneys/agents associated with this application", do not meet any the conditions set forth in 37 CFR 10.40.

In order to request or take action in a patent matter, the assignee must establish its ownership of the patent to the satisfaction of the Director. In this regard, a Statement under 37 CFR 3.73(b) must have either: (i) documentary evidence of a chain of title from the original owner to the assignee (*e.g.*, copy of an executed assignment), and a statement affirming that the documentary

evidence of the chain of title from the original owner to the assignee was or concurrently is being submitted for recordation pursuant to § 3.11; or (ii) a statement specifying where documentary evidence of a chain of title from the original owner to the assignee is recorded in the assignment records of the Office (*e.g.*, reel and frame number). The power of attorney filed on December 5, 2006 does not include one of the above two options.

All future communications from the Office will continue to be directed to the above-listed address until otherwise notified by applicant.

Telephone inquiries concerning this decision should be directed to undersigned at 571-272-1642.

April M. Wise
Petitions Examiner
Office of Petitions

cc: RAZA MICROELECTRONICS, INC.
LEGAL DEPARTMENT
18920 FORGE DRIVE
CUPERTINO, CA 95014-0701

3 ~~DEC~~ JAN 08
1800

EAST Search History

Ref #	Hits	Search Query	DBs	Default Operator	Plurals	Time Stamp
S4	149 BSF AU	search$ term auction$	US-PGPUB; USPAT; EPO; JPO	WITH	ON	2007/08/25 21:14
S17	645	auction near bidder	US-PGPUB; USPAT; EPO; JPO	NEAR	ON	2007/08/25 21:04
S42	145 AU	search term auction$	US-PGPUB; USPAT; EPO; JPO	WITH	ON	2007/08/25 21:06
S70	1	("5,835,896").PN.	US-PGPUB; USPAT; EPO; JPO	OR	OFF	2007/08/25 20:54
S71	2 AU	(("5,890,138") or ("6,021,398")).PN.	US-PGPUB; USPAT; EPO; JPO	OR	OFF	2007/08/25 20:55
S75	138 AU	paid inclus$	US-PGPUB; USPAT; EPO; JPO	ADJ	ON	2007/08/25 21:08
S98	74 AU	(analy$ logic) with (order$)	US-PGPUB; USPAT; EPO; JPO	ADJ	ON	2007/08/25 20:58

EAST Search History

S101	37 BSF AU	purch$ logic	US-PGPUB; USPAT; EPO; JPO	ADJ	ON	2007/08/25 20:59
S102	65 AU	purch$ logic	US-PGPUB; USPAT; EPO; JPO	NEAR	ON	2007/08/25 20:59
S107	9 AU	(purch$ logic) near (order$)	US-PGPUB; USPAT; EPO; JPO	SAME	ON	2007/08/25 21:00
S108	2 AU	(purch$ logic) adj (order$)	US-PGPUB; USPAT; EPO; JPO	SAME	ON	2007/08/25 21:00
S112	4 AU	solicit$ logic	US-PGPUB; USPAT; EPO; JPO	ADJ	ON	2007/08/25 21:00
S113	1	(solicit$ logic) same (order$)	US-PGPUB; USPAT; EPO; JPO	ADJ	ON	2007/08/25 21:01
S114	1	(solicit$ logic) with (order$)	US-PGPUB; USPAT; EPO; JPO	ADJ	ON	2007/08/25 21:01
S155	102 AU	S66 and S117	US-PGPUB; USPAT; EPO; JPO	SAME	ON	2007/08/25 21:07

EAST Search History

S186	32 BSF AU	search$ term auction$	US-PGPUB; USPAT; EPO; JPO	NEAR	ON	2007/08/25 23:26
S187	1	("20040039733").PN.	US-PGPUB; USPAT; EPO; JPO	OR	OFF	2007/08/25 23:26
S189	4 AU	auction db	US-PGPUB; USPAT; EPO; JPO	ADJ	ON	2007/08/25 23:44
S192	15 AU	search term auctions	US-PGPUB; USPAT; EPO; JPO	NEAR	ON	2007/08/25 23:50
S193	14 AU	search$ term auction$	US-PGPUB; USPAT; EPO; JPO	ADJ	ON	2007/08/25 23:51
S194	13 AU	search term auctions	US-PGPUB; USPAT; EPO; JPO	ADJ	ON	2007/08/25 23:51
S197	5 AU	(receiving logic) near order$	US-PGPUB; USPAT; EPO; JPO	SAME	ON	2007/08/26 00:10
S198	3 AU	(receiving logic) adj order$	US-PGPUB; USPAT; EPO; JPO	SAME	ON	2007/08/26 00:11

EAST Search History

S200	74 BSF All	(analy$ logic) with (order$)	US-PGPUB; USPAT; EPO; JPO	ADJ	ON	2007/08/26 00:11
S201	3 All	(receiving logic) adj (order$)	US-PGPUB; USPAT; EPO; JPO	SAME	ON	2007/08/26 00:15
S202	1	(analy$ logic) near (order$)	US-PGPUB; USPAT; EPO; JPO	ADJ	ON	2007/08/26 00:15
S203	23 All	solicit$ logic	US-PGPUB; USPAT; EPO; JPO	NEAR	ON	2007/08/26 00:15
S206	8 All	S204 and S205	US-PGPUB; USPAT; EPO; JPO	SAME	ON	2007/08/26 00:17

EAST Search History

S307	29 BSF All	(("5640553") or ("5675819") or ("5845278") or ("5848396") or ("5895454") or ("5913210") or ("5918214") or ("6006225") or ("6009459") or ("6014664") or ("6032145") or ("5960429") or ("6006218") or ("6064979") or ("6064980") or ("6073135") or ("6125395") or ("6144958") or ("6182050") or ("6230153") or ("6266649") or ("6401118") or ("6405175") or ("6415320") or ("6418434") or ("6421675") or ("6460072") or ("6484149") or ("6535896")).PN.	US-PGPUB; USPAT; EPO; JPO	OR	OFF	2007/08/26 04:21
S308	5 All	(("5283731") or ("5659732") or ("2428076") or ("1487450")).PN.	US-PGPUB; USPAT; EPO; JPO	OR	OFF	2007/08/26 04:33
S309	4 All	(("4805134") or ("5107419") or ("5333312") or ("5544352")).PN.	US-PGPUB; USPAT; EPO; JPO	OR	OFF	2007/08/26 05:06
S310	2 All	(("6057834") or ("7092901")).PN.	US-PGPUB; USPAT; EPO; JPO	OR	OFF	2008/01/03 12:22

23 AUG 07
1800

EAST Search History

Ref #	Hits	Search Query	DBs	Default Operator	Plurals	Time Stamp
L1	267 BSF	search term auctions	US-PGPUB; USPAT; EPO; JPO	SAME	ON	2007/08/25 21:03
L2	291	search$ term auction$	US-PGPUB; USPAT; EPO; JPO	SAME	ON	2007/08/25 20:40
L3	149 AU	search$ term auction$	US-PGPUB; USPAT; EPO; JPO	WITH	ON	2007/08/25 20:40
L4	291	search$ term auction$	US-PGPUB; USPAT; EPO; JPO	SAME	ON	2007/08/25 20:40
L5	32 AU	search$ term auction$	US-PGPUB; USPAT; EPO; JPO	NEAR	ON	2007/08/25 20:41
L6	15 AU	search term auctions	US-PGPUB; USPAT; EPO; JPO	NEAR	ON	2007/08/25 20:41
L7	139 AU	search term auctions	US-PGPUB; USPAT; EPO; JPO	WITH	ON	2007/08/25 20:41

EAST Search History

L8	13 BSF AU	search term auctions	US-PGPUB; USPAT; EPO; JPO	ADJ	ON	2007/08/25 20:41
L9	14 AU	search$ term auction$	US-PGPUB; USPAT; EPO; JPO	ADJ	ON	2007/08/25 20:42
L10	1214	online near1 auction$	US-PGPUB; USPAT; EPO; JPO	ADJ	ON	2007/08/25 20:42
L11	1214	online near1 auction$	US-PGPUB; USPAT; EPO; JPO	SAME	ON	2007/08/25 20:42
L12	1929	online auction$	US-PGPUB; USPAT; EPO; JPO	SAME	ON	2007/08/25 20:42
L13	1648	online auction$	US-PGPUB; USPAT; EPO; JPO	WITH	ON	2007/08/25 20:42
L14	1214	online auction$	US-PGPUB; USPAT; EPO; JPO	NEAR	ON	2007/08/25 20:42
L15	2 AU	auction near$ bidder	US-PGPUB; USPAT; EPO; JPO	NEAR	ON	2007/08/25 20:43

EAST Search History

L16	645 BSF	auction near bidder	US-PGPUB; USPAT; EPO; JPO	NEAR	ON	2007/08/25 21:04
L17	2142	auction bidder	US-PGPUB; USPAT; EPO; JPO	SAME	ON	2007/08/25 20:43
L18	1831	auction bidder	US-PGPUB; USPAT; EPO; JPO	WITH	ON	2007/08/25 20:43
L19	4570	auction bid$	US-PGPUB; USPAT; EPO; JPO	SAME	ON	2007/08/25 20:43
L20	4058	auction bid$	US-PGPUB; USPAT; EPO; JPO	WITH	ON	2007/08/25 20:43
L21	1068	auction bid$	US-PGPUB; USPAT; EPO; JPO	ADJ	ON	2007/08/25 20:43
L22	1762	auction bid$	US-PGPUB; USPAT; EPO; JPO	NEAR	ON	2007/08/25 20:44
L23	1550	auction system	US-PGPUB; USPAT; EPO; JPO	NEAR	ON	2007/08/25 20:44

EAST Search History

L24	5163 BSF	auction system	US-PGPUB; USPAT; EPO; JPO	SAME	ON	2007/08/25 20:44
L25	4050	auction system	US-PGPUB; USPAT; EPO; JPO	WITH	ON	2007/08/25 20:44
L26	1550	auction system	US-PGPUB; USPAT; EPO; JPO	NEAR	ON	2007/08/25 20:44
L27	1424	auction system	US-PGPUB; USPAT; EPO; JPO	ADJ	ON	2007/08/25 20:45
L28	181 AU	auction database	US-PGPUB; USPAT; EPO; JPO	ADJ	ON	2007/08/25 20:45
L29	240	auction database	US-PGPUB; USPAT; EPO; JPO	NEAR	ON	2007/08/25 20:45
L30	1064	auction database	US-PGPUB; USPAT; EPO; JPO	WITH	ON	2007/08/25 20:46
L31	1674	auction database	US-PGPUB; USPAT; EPO; JPO	SAME	ON	2007/08/25 20:46

EAST Search History

L32	1697 BSF	auction datab$	US-PGPUB; USPAT; EPO; JPO	SAME	ON	2007/08/25 20:46
L33	1083	auction datab$	US-PGPUB; USPAT; EPO; JPO	WITH	ON	2007/08/25 20:46
L34	240	auction datab$	US-PGPUB; USPAT; EPO; JPO	NEAR	ON	2007/08/25 20:46
L35	181 AU	auction datab$	US-PGPUB; USPAT; EPO; JPO	ADJ	ON	2007/08/25 20:46
L36	4 AU	auction db	US-PGPUB; USPAT; EPO; JPO	ADJ	ON	2007/08/25 20:47
L37	4 AU	auction db	US-PGPUB; USPAT; EPO; JPO	NEAR	ON	2007/08/25 20:47
L38	45 AU	auction db	US-PGPUB; USPAT; EPO; JPO	WITH	ON	2007/08/25 20:47
L39	66 AU	auction db	US-PGPUB; USPAT; EPO; JPO	SAME	ON	2007/08/25 20:47

EAST Search History

L40	276 BSF	search term auction$	US-PGPUB; USPAT; EPO; JPO	SAME	ON	2007/08/25 20:50
L41	145 AU	search term auction$	US-PGPUB; USPAT; EPO; JPO	WITH	ON	2007/08/25 21:06
L42	32 AU	search term auction$	US-PGPUB; USPAT; EPO; JPO	NEAR	ON	2007/08/25 20:47
L43	14 AU	search term auction$	US-PGPUB; USPAT; EPO; JPO	ADJ	ON	2007/08/25 20:47
L44	19527	search engine$	US-PGPUB; USPAT; EPO; JPO	ADJ	ON	2007/08/25 20:48
L45	20068	search engine$	US-PGPUB; USPAT; EPO; JPO	NEAR	ON	2007/08/25 20:48
L46	24656	search engine$	US-PGPUB; USPAT; EPO; JPO	WITH	ON	2007/08/25 20:48
L47	29710	search engine$	US-PGPUB; USPAT; EPO; JPO	SAME	ON	2007/08/25 20:48

EAST Search History

L48	11201 BF	search engine$ datab$	US-PGPUB; USPAT; EPO; JPO	SAME	ON	2007/08/25 21:06
L49	0	(search engine$ datab$) near (auction)	US-PGPUB; USPAT; EPO; JPO	SAME	ON	2007/08/25 20:49
L50	119 AU	(search engine$ datab$) same (auction)	US-PGPUB; USPAT; EPO; JPO	SAME	ON	2007/08/25 20:49
L51	0	(search engine$ datab$) adj (auction)	US-PGPUB; USPAT; EPO; JPO	SAME	ON	2007/08/25 20:49
L52	44 AU	(search engine$ datab$) with (auction)	US-PGPUB; USPAT; EPO; JPO	SAME	ON	2007/08/25 20:49
L53	46 AU	online search term auction$	US-PGPUB; USPAT; EPO; JPO	SAME	ON	2007/08/25 20:50
L54	17 AU	online search term auction$	US-PGPUB; USPAT; EPO; JPO	WITH	ON	2007/08/25 20:50
L55	0	online search term auction$	US-PGPUB; USPAT; EPO; JPO	NEAR	ON	2007/08/25 20:50

EAST Search History

L56	0	online search term auction$	US-PGPUB; USPAT; EPO; JPO	ADJ	ON	2007/08/25 20:50
L57	0	(online search term auction$) near (auction)	US-PGPUB; USPAT; EPO; JPO	ADJ	ON	2007/08/25 20:50
L58	0	(online search term auction$) same (auction)	US-PGPUB; USPAT; EPO; JPO	ADJ	ON	2007/08/25 20:51
L59	0	(online search term auction$) adj (auction)	US-PGPUB; USPAT; EPO; JPO	ADJ	ON	2007/08/25 20:51
L60	0	(online search term auction$) with (auction)	US-PGPUB; USPAT; EPO; JPO	ADJ	ON	2007/08/25 20:51
L61	0	(online search term auction$) with (datab$)	US-PGPUB; USPAT; EPO; JPO	ADJ	ON	2007/08/25 20:51
L62	0	(online search term auction$) near (datab$)	US-PGPUB; USPAT; EPO; JPO	ADJ	ON	2007/08/25 20:51
L63	0	(online search term auction$) with (datab$)	US-PGPUB; USPAT; EPO; JPO	ADJ	ON	2007/08/25 20:51

EAST Search History

L64	0	(online search term auction$) adj (databa$)	US-PGPUB; USPAT; EPO; JPO	ADJ	ON	2007/08/25 20:52
L65	11604	search databa$	US-PGPUB; USPAT; EPO; JPO	ADJ	ON	2007/08/25 20:52
L66	22032	search databa$	US-PGPUB; USPAT; EPO; JPO	NEAR	ON	2007/08/25 20:52
L67	59839	search databa$	US-PGPUB; USPAT; EPO; JPO	WITH	ON	2007/08/25 20:52
L68	73204	search databa$	US-PGPUB; USPAT; EPO; JPO	SAME	ON	2007/08/25 21:07
L69	1	("5,835,896").PN.	US-PGPUB; USPAT; EPO; JPO	OR	OFF	2007/08/25 20:54
L70	2	(("5,890,138") or ("6,021,398")).PN.	US-PGPUB; USPAT; EPO; JPO	OR	OFF	2007/08/25 20:55
L71	733	paid inclus$	US-PGPUB; USPAT; EPO; JPO	SAME	ON	2007/08/25 20:55

EAST Search History

L72	301 BSF	paid inclus$	US-PGPUB; USPAT; EPO; JPO	WITH	ON	2007/08/25 20:55
L73	148 AU	paid inclus$	US-PGPUB; USPAT; EPO; JPO	NEAR	ON	2007/08/25 20:55
L74	138 AU	paid inclus$	US-PGPUB; USPAT; EPO; JPO	ADJ	ON	2007/08/25 21:08
L75	0	pay for performance	US-PGPUB; USPAT; EPO; JPO	SAME	ON	2007/08/25 20:55
L76	0	pay for performance	US-PGPUB; USPAT; EPO; JPO	WITH	ON	2007/08/25 20:55
L77	0	pay for performance	US-PGPUB; USPAT; EPO; JPO	NEAR	ON	2007/08/25 20:55
L78	0	pay for performance	US-PGPUB; USPAT; EPO; JPO	ADJ	ON	2007/08/25 20:56
L79	3547	pay performance	US-PGPUB; USPAT; EPO; JPO	SAME	ON	2007/08/25 20:56

EAST Search History

L80	1386 BSF	pay performance	US-PGPUB; USPAT; EPO; JPO	WITH	ON	2007/08/25 20:56
L81	196	pay performance	US-PGPUB; USPAT; EPO; JPO	NEAR	ON	2007/08/25 20:56
L82	167	pay performance	US-PGPUB; USPAT; EPO; JPO	ADJ	ON	2007/08/25 20:56
L83	2050	receiving logic	US-PGPUB; USPAT; EPO; JPO	ADJ	ON	2007/08/25 20:56
L84	5752	receiving logic	US-PGPUB; USPAT; EPO; JPO	NEAR	ON	2007/08/25 20:56
L85	42462	receiving logic	US-PGPUB; USPAT; EPO; JPO	WITH	ON	2007/08/25 20:56
L86	70032	receiving logic	US-PGPUB; USPAT; EPO; JPO	SAME	ON	2007/08/25 20:56
L87	5 AU	(receiving logic) near order$	US-PGPUB; USPAT; EPO; JPO	SAME	ON	2007/08/25 20:57

EAST Search History

L88	6283 BSF	(receiving logic) same order$	US-PGPUB; USPAT; EPO; JPO	SAME	ON	2007/08/25 20:57
L89	1445	(receiving logic) with order$	US-PGPUB; USPAT; EPO; JPO	SAME	ON	2007/08/25 20:57
L90	3 AW	(receiving logic) adj order$	US-PGPUB; USPAT; EPO; JPO	SAME	ON	2007/08/25 20:57
L91	3 AW	(receiving logic) adj (order$)	US-PGPUB; USPAT; EPO; JPO	SAME	ON	2007/08/25 20:57
L92	35353	analy$ logic	US-PGPUB; USPAT; EPO; JPO	SAME	ON	2007/08/25 20:58
L93	20505	analy$ logic	US-PGPUB; USPAT; EPO; JPO	WITH	ON	2007/08/25 20:58
L94	5746	analy$ logic	US-PGPUB; USPAT; EPO; JPO	NEAR	ON	2007/08/25 20:58
L95	1863	analy$ logic	US-PGPUB; USPAT; EPO; JPO	ADJ	ON	2007/08/25 20:58

EAST Search History

L96	178 BSF	(analy$ logic) same (order$)	US-PGPUB; USPAT; EPO; JPO	ADJ	ON	2007/08/25 20:58
L97	74 AU	(analy$ logic) with (order$)	US-PGPUB; USPAT; EPO; JPO	ADJ	ON	2007/08/25 20:58
L98	1	(analy$ logic) near (order$)	US-PGPUB; USPAT; EPO; JPO	ADJ	ON	2007/08/25 20:59
L99	0	(analy$ logic) adj (order$)	US-PGPUB; USPAT; EPO; JPO	ADJ	ON	2007/08/25 20:59
L100	37 AU	purch$ logic	US-PGPUB; USPAT; EPO; JPO	ADJ	ON	2007/08/25 20:59
L101	65 AU	purch$ logic	US-PGPUB; USPAT; EPO; JPO	NEAR	ON	2007/08/25 20:59
L102	1128	purch$ logic	US-PGPUB; USPAT; EPO; JPO	WITH	ON	2007/08/25 20:59
L103	3078	purch$ logic	US-PGPUB; USPAT; EPO; JPO	SAME	ON	2007/08/25 20:59

EAST Search History

L104	777 BSF	(purch$ logic) same (order$)	US-PGPUB; USPAT; EPO; JPO	SAME	ON	2007/08/25 20:59
L105	215	(purch$ logic) with (order$)	US-PGPUB; USPAT; EPO; JPO	SAME	ON	2007/08/25 20:59
L106	9 AU	(purch$ logic) near (order$)	US-PGPUB; USPAT; EPO; JPO	SAME	ON	2007/08/25 21:00
L107	2 AU	(purch$ logic) adj (order$)	US-PGPUB; USPAT; EPO; JPO	SAME	ON	2007/08/25 21:00
L108	307	solicit$ logic	US-PGPUB; USPAT; EPO; JPO	SAME	ON	2007/08/25 21:00
L109	112 AU	solicit$ logic	US-PGPUB; USPAT; EPO; JPO	WITH	ON	2007/08/25 21:00
L110	23 AU	solicit$ logic	US-PGPUB; USPAT; EPO; JPO	NEAR	ON	2007/08/25 21:00
L111	4 AU	solicit$ logic	US-PGPUB; USPAT; EPO; JPO	ADJ	ON	2007/08/25 21:00

EAST Search History

L112	1 BSF	(solicit$ logic) same (order$)	US-PGPUB; USPAT; EPO; JPO	ADJ	ON	2007/08/25 21:01
L113	1	(solicit$ logic) with (order$)	US-PGPUB; USPAT; EPO; JPO	ADJ	ON	2007/08/25 21:01
L114	0	(solicit$ logic) near (order$)	US-PGPUB; USPAT; EPO; JPO	ADJ	ON	2007/08/25 21:01
L115	0	(solicit$ logic) adj$ (order$)	US-PGPUB; USPAT; EPO; JPO	ADJ	ON	2007/08/25 21:01
L116	3012	(705/35).CCLS.	US-PGPUB; USPAT; EPO; JPO	OR	OFF	2007/08/25 21:03
L117	8 AU	l1 and L116	US-PGPUB; USPAT; EPO; JPO	SAME	ON	2007/08/25 21:03
L118	8 AU	l2 and L116	US-PGPUB; USPAT; EPO; JPO	SAME	ON	2007/08/25 21:03
L119	2 AU	l3 and L116	US-PGPUB; USPAT; EPO; JPO	SAME	ON	2007/08/25 21:03

EAST Search History

L120	8 BSF AW	l4 and L116	US-PGPUB; USPAT; EPO; JPO	SAME	ON	2007/08/25 21:03
L121	49 AW	l10 and L116	US-PGPUB; USPAT; EPO; JPO	SAME	ON	2007/08/25 21:03
L122	49 AW	l11 and L116	US-PGPUB; USPAT; EPO; JPO	SAME	ON	2007/08/25 21:04
L123	80 AW	l12 and L116	US-PGPUB; USPAT; EPO; JPO	SAME	ON	2007/08/25 21:04
L124	72 AW	l13 and L116	US-PGPUB; USPAT; EPO; JPO	SAME	ON	2007/08/25 21:04
L125	49 AW	l14 and L116	US-PGPUB; USPAT; EPO; JPO	SAME	ON	2007/08/25 21:04
L126	44 AW	l16 and L116	US-PGPUB; USPAT; EPO; JPO	NEAR	ON	2007/08/25 21:04
L127	96 AW	l17 and L116	US-PGPUB; USPAT; EPO; JPO	NEAR	ON	2007/08/25 21:04

EAST Search History

L128	85 AW BSF	l18 and L116	US-PGPUB; USPAT; EPO; JPO	NEAR	ON	2007/08/25 21:04
L129	178	l19 and L116	US-PGPUB; USPAT; EPO; JPO	NEAR	ON	2007/08/25 21:04
L130	158	l20 and L116	US-PGPUB; USPAT; EPO; JPO	NEAR	ON	2007/08/25 21:04
L131	66 ALL	l21 and L116	US-PGPUB; USPAT; EPO; JPO	NEAR	ON	2007/08/25 21:04
L132	78 ALL	l22 and L116	US-PGPUB; USPAT; EPO; JPO	NEAR	ON	2007/08/25 21:04
L133	49 ALL	l23 and L116	US-PGPUB; USPAT; EPO; JPO	NEAR	ON	2007/08/25 21:04
L134	164 AW	l24 and L116	US-PGPUB; USPAT; EPO; JPO	NEAR	ON	2007/08/25 21:05
L135	131 AW	l25 and L116	US-PGPUB; USPAT; EPO; JPO	NEAR	ON	2007/08/25 21:05

EAST Search History

L136	49 BSF	l26 and L116	US-PGPUB; USPAT; EPO; JPO	NEAR	ON	2007/08/25 21:05
L137	46 All	l27 and L116	US-PGPUB; USPAT; EPO; JPO	NEAR	ON	2007/08/25 21:05
L138	10 All	l28 and L116	US-PGPUB; USPAT; EPO; JPO	NEAR	ON	2007/08/25 21:05
L139	11 All	l29 and L116	US-PGPUB; USPAT; EPO; JPO	NEAR	ON	2007/08/25 21:05
L140	44 All	l30 and L116	US-PGPUB; USPAT; EPO; JPO	NEAR	ON	2007/08/25 21:05
L141	65 All	l31 and L116	US-PGPUB; USPAT; EPO; JPO	NEAR	ON	2007/08/25 21:05
L142	66 All	l32 and L116	US-PGPUB; USPAT; EPO; JPO	NEAR	ON	2007/08/25 21:05
L143	44 All	l33 and L116	US-PGPUB; USPAT; EPO; JPO	NEAR	ON	2007/08/25 21:05

EAST Search History

L144	11 BSF AU	l34 and L116	US-PGPUB; USPAT; EPO; JPO	NEAR	ON	2007/08/25 21:06
L145	10 AU	l35 and L116	US-PGPUB; USPAT; EPO; JPO	NEAR	ON	2007/08/25 21:06
L146	8 AU	l40 and L116	US-PGPUB; USPAT; EPO; JPO	WITH	ON	2007/08/25 21:06
L147	2 AU	l41 and L116	US-PGPUB; USPAT; EPO; JPO	WITH	ON	2007/08/25 21:06
L148	112 AU	l44 and L116	US-PGPUB; USPAT; EPO; JPO	SAME	ON	2007/08/25 21:06
L149	113 AU	l45 and L116	US-PGPUB; USPAT; EPO; JPO	SAME	ON	2007/08/25 21:06
L150	113 AU	l45 and L116	US-PGPUB; USPAT; EPO; JPO	SAME	ON	2007/08/25 21:06
L151	133 AU	l46 and L116	US-PGPUB; USPAT; EPO; JPO	SAME	ON	2007/08/25 21:07

EAST Search History

L152	70 BSF All	l48 and L116	US-PGPUB; USPAT; EPO; JPO	SAME	ON	2007/08/25 21:07
L153	153	l47 and L116	US-PGPUB; USPAT; EPO; JPO	SAME	ON	2007/08/25 21:07
L154	102 All	l65 and L116	US-PGPUB; USPAT; EPO; JPO	SAME	ON	2007/08/25 21:07
L155	140	l66 and L116	US-PGPUB; USPAT; EPO; JPO	SAME	ON	2007/08/25 21:07
L156	322	l67 and L116	US-PGPUB; USPAT; EPO; JPO	SAME	ON	2007/08/25 21:07
L157	394	l68 and L116	US-PGPUB; USPAT; EPO; JPO	SAME	ON	2007/08/25 21:08
L158	36	l71 and L116	US-PGPUB; USPAT; EPO; JPO	ADJ	ON	2007/08/25 21:08
L159	7 All	l72 and L116	US-PGPUB; USPAT; EPO; JPO	ADJ	ON	2007/08/25 21:08

EAST Search History

L160	1 BSF	l73 and L116	US-PGPUB; USPAT; EPO; JPO	ADJ	ON	2007/08/25 21:08
L161	1	l74 and L116	US-PGPUB; USPAT; EPO; JPO	ADJ	ON	2007/08/25 21:08
L162	127 AU	l79 and L116	US-PGPUB; USPAT; EPO; JPO	ADJ	ON	2007/08/25 21:08
L163	31 AU	l80 and L116	US-PGPUB; USPAT; EPO; JPO	ADJ	ON	2007/08/25 21:09
L164	2 AU	l81 and L116	US-PGPUB; USPAT; EPO; JPO	ADJ	ON	2007/08/25 21:09
L165	1	l82 and L116	US-PGPUB; USPAT; EPO; JPO	ADJ	ON	2007/08/25 21:09
L166	0	l83 and L116	US-PGPUB; USPAT; EPO; JPO	ADJ	ON	2007/08/25 21:09
L167	14 AU	l84 and L116	US-PGPUB; USPAT; EPO; JPO	ADJ	ON	2007/08/25 21:09

EAST Search History

L168	37 AU BSF	l85 and L116	US-PGPUB; USPAT; EPO; JPO	ADJ	ON	2007/08/25 21:09
L169	70 AU	l86 and L116	US-PGPUB; USPAT; EPO; JPO	ADJ	ON	2007/08/25 21:09
L170	16 AU	l88 and L116	US-PGPUB; USPAT; EPO; JPO	ADJ	ON	2007/08/25 21:09
L171	2 AU	l89 and L116	US-PGPUB; USPAT; EPO; JPO	ADJ	ON	2007/08/25 21:09
L172	135 AU	l92 and L116	US-PGPUB; USPAT; EPO; JPO	ADJ	ON	2007/08/25 21:09
L173	86 AU	l93 and L116	US-PGPUB; USPAT; EPO; JPO	ADJ	ON	2007/08/25 21:09
L174	86 AU	l93 and L116	US-PGPUB; USPAT; EPO; JPO	ADJ	ON	2007/08/25 21:09
L175	9 AU	l94 and L116	US-PGPUB; USPAT; EPO; JPO	ADJ	ON	2007/08/25 21:10

EAST Search History

L176	5 BSF AU	l95 and L116	US-PGPUB; USPAT; EPO; JPO	ADJ	ON	2007/08/25 21:10
L177	1	l96 and L116	US-PGPUB; USPAT; EPO; JPO	ADJ	ON	2007/08/25 21:10
L178	0	l97 and L116	US-PGPUB; USPAT; EPO; JPO	ADJ	ON	2007/08/25 21:10
L179	39 AU	l102 and L116	US-PGPUB; USPAT; EPO; JPO	ADJ	ON	2007/08/25 21:10
L180	83 AU	l103 and L116	US-PGPUB; USPAT; EPO; JPO	ADJ	ON	2007/08/25 21:10
L181	8 AU	l04 and L116	US-PGPUB; USPAT; EPO; JPO	ADJ	ON	2007/08/25 21:11
L182	3 AU	l105 and L116	US-PGPUB; USPAT; EPO; JPO	ADJ	ON	2007/08/25 21:11
L183	10 AU	l108 and L116	US-PGPUB; USPAT; EPO; JPO	ADJ	ON	2007/08/25 21:11

EAST Search History

L18 4	0 BSF	l109 and L116	US-PGPUB; USPAT; EPO; JPO	ADJ	ON	2007/08/25 21:11
S1	3012 BSF	(705/35).CCLS.	US-PGPUB; USPAT; EPO; JPO	OR	OFF	2007/08/25 20:40

Day : Friday
Date: 12/4/2009

PALM INTRANET

Time: 14:05:33

Inventor Name Search Result

Your Search was:

Last Name = CASWELL
First Name = W.

Application#	Patent#	PG Pub#	Status	Date Filed	Title	Examiner Name	Invento Name
10930888	Not Issued	20050209919	41	08/31/2004	Targeted consumer traffic delivery system	ROBINSON BOYCE,AKIBA	CASWE W. B.
10930180	Not Issued	20050209953	135	08/31/2004	Consolidated purchasing system for search term auctions	FIELDS,BENJAMIN	CASWE W. B.
10931138	Not Issued	20050209920	41	08/31/2004	Guaranteed pricing for advertising customers	ROBINSON BOYCE,AKIBA	CASWE W. B.

Inventor Search Completed: No Records to Display.

Search Another: Inventor **Last Name** CASWELL **First Name** W. Search

To go back use Back button on your browser toolbar.

Back to PALM | ASSIGNMENT | OASIS | Home page

Day : Friday
Date: 12/4/2009

PALM INTRANET

Time: 14:04:22

Inventor Name Search Result

Your Search was:

Last Name = SALVAGE
First Name = NEIL

Application#	Patent#	PG Pub#	Status	Date Filed	Title	Examiner Name	Invento Name
10930180	Not Issued	20050209953	135	08/31/2004	Consolidated purchasing system for search term auctions	FIELDS,BENJAMIN	SALVA NEIL
10930888	Not Issued	20050209919	41	08/31/2004	Targeted consumer traffic delivery system	ROBINSON BOYCE,AKIBA	SALVA NEIL
10931138	Not Issued	20050209920	41	08/31/2004	Guaranteed pricing for advertising customers	ROBINSON BOYCE,AKIBA	SALVA NEIL
60553811	Not Issued		159	03/17/2004	Fixed rate advertising system	,	SALVA NEIL

Inventor Search Completed: No Records to Display.

Search Another: Inventor **Last Name** SALVAGE **First Name** NEIL Search

To go back use Back button on your browser toolbar.

Back to PALM | ASSIGNMENT | OASIS | Home page

Day : Friday
Date: 12/4/2009

PALM INTRANET

Time: 14:06:09

Inventor Name Search Result

Your Search was:

Last Name = LOTT
First Name = BILL

Application#	Patent#	PG Pub#	Status	Date Filed	Title	Examiner Name	Invento Name
10930180	Not Issued	20050209953	135	08/31/2004	Consolidated purchasing system for search term auctions	FIELDS,BENJAMIN	LOTT, BILL
10930888	Not Issued	20050209919	41	08/31/2004	Targeted consumer traffic delivery system	ROBINSON BOYCE,AKIBA	LOTT, BILL
10931138	Not Issued	20050209920	41	08/31/2004	Guaranteed pricing for advertising customers	ROBINSON BOYCE,AKIBA	LOTT, BILL
60553811	Not Issued		159	03/17/2004	Fixed rate advertising system	,	LOTT, BILL

Inventor Search Completed: No Records to Display.

Search Another: Inventor **Last Name** LOTT **First Name** BILL Search

To go back use Back button on your browser toolbar.

Back to PALM | ASSIGNMENT | OASIS | Home page

Day : Friday
Date: 12/4/2009

PALM INTRANET

Time: 14:08:09

Inventor Name Search Result

Your Search was:

Last Name = STUBBS
First Name = CHARLES

Application#	Patent#	PG Pub#	Status	Date Filed	Title	Examiner Name
10191763	Not Issued		161	07/08/2002	System and method for processing multiple search engine results based on financial criteria	NGUYEN,VAN KIM
10930180	Not Issued	20050209953	135	08/31/2004	Consolidated purchasing system for search term auctions	FIELDS,BENJAMIN
10930888	Not Issued	20050209919	41	08/31/2004	Targeted consumer traffic delivery system	ROBINSON BOYCE,AKIBA
10931138	Not Issued	20050209920	41	08/31/2004	Guaranteed pricing for advertising customers	ROBINSON BOYCE,AKIBA
11463138	Not Issued	20070116216	161	08/08/2006	Dynamic Directory Auction Service	AKINTOLA,OLABODI
60303366	Not Issued		159	07/06/2001	System and method for processing multiple search engine results based on financial criteria	,
60553811	Not Issued		159	03/17/2004	Fixed rate advertising system	,
60734360	Not Issued		159	11/07/2005	Services E-commerce	,

					marketplace	
08149363	5390919		250	11/09/1993	ADJUSTABLE GOLF PUTTER	PASSANITI,SEBASTIA
07952614	Not Issued		161	12/18/1992	PSTN/PCN SWITCHING ARRANGEMENT	CUMMING,WILLIAM
08022020	Not Issued		161	02/24/1993	DISTRIBUTED CALL PROCESSING	LEWIS,CHERYL

Inventor Search Completed: No Records to Display.

Search Another: Inventor **Last Name** STUBBS **First Name** CHARLES Search

To go back use Back button on your browser toolbar.

Back to PALM | ASSIGNMENT | OASIS | Home page

Day : Friday
Date: 12/4/2009

PALM INTRANET

Time: 14:07:45

Inventor Name Search Result

Your Search was:

Last Name = SCHOLL
First Name = LAURIE

Application#	Patent#	PG Pub#	Status	Date Filed	Title	Examiner Name	Invento Name
10930180	Not Issued	20050209953	135	08/31/2004	Consolidated purchasing system for search term auctions	FIELDS,BENJAMIN	SCHOL LAURI
10930888	Not Issued	20050209919	41	08/31/2004	Targeted consumer traffic delivery system	ROBINSON BOYCE,AKIBA	SCHOL LAURI
10931138	Not Issued	20050209920	41	08/31/2004	Guaranteed pricing for advertising customers	ROBINSON BOYCE,AKIBA	SCHOL LAURI
60553811	Not Issued		159	03/17/2004	Fixed rate advertising system	,	SCHOL LAURI

Inventor Search Completed: No Records to Display.

Search Another: Inventor **Last Name** SCHOLL **First Name** LAURIE Search

To go back use Back button on your browser toolbar.

Back to PALM | ASSIGNMENT | OASIS | Home page

Day : Friday
Date: 12/4/2009

PALM INTRANET

Time: 14:06:36

Inventor Name Search Result

Your Search was:

Last Name = MULQUEEN
First Name = MATTHEW

Application#	Patent#	PG Pub#	Status	Date Filed	Title	Examiner Name	Invento Name
10930180	Not Issued	20050209953	135	08/31/2004	Consolidated purchasing system for search term auctions	FIELDS,BENJAMIN	MULQU MATTH
10930888	Not Issued	20050209919	41	08/31/2004	Targeted consumer traffic delivery system	ROBINSON BOYCE,AKIBA	MULQU MATTH
10931138	Not Issued	20050209920	41	08/31/2004	Guaranteed pricing for advertising customers	ROBINSON BOYCE,AKIBA	MULQU MATTH
60553811	Not Issued		159	03/17/2004	Fixed rate advertising system	,	MULQU MATTH

Inventor Search Completed: No Records to Display.

Search Another: Inventor Last Name MULQUEEN First Name MATTHEW Search

To go back use Back button on your browser toolbar.

Back to PALM | ASSIGNMENT | OASIS | Home page

Day : Friday
Date: 12/4/2009

PALM INTRANET

Time: 14:07:14

Inventor Name Search Result

Your Search was:

Last Name = TALBOT
First Name = DEREK

Application#	Patent#	PG Pub#	Status	Date Filed	Title	Examiner Name	Inve Nam
10930180	Not Issued	20050209953	135	08/31/2004	Consolidated purchasing system for search term auctions	FIELDS,BENJAMIN	TAL DER
10930888	Not Issued	20050209919	41	08/31/2004	Targeted consumer traffic delivery system	ROBINSON BOYCE,AKIBA	TAL DER
10931138	Not Issued	20050209920	41	08/31/2004	Guaranteed pricing for advertising customers	ROBINSON BOYCE,AKIBA	TAL DER
60553811	Not Issued		159	03/17/2004	Fixed rate advertising system	,	TAL DER
07519809	5056789		150	05/07/1990	BALL SEQUENCING GAME	GRIEB,WILLIAM	TAL DER J.

Inventor Search Completed: No Records to Display.

Search Another: Inventor Last Name TALBOT First Name DEREK Search

To go back use Back button on your browser toolbar.

Back to PALM | ASSIGNMENT | OASIS | Home page

SPE RESPONSE FOR CERTIFICATE OF CORRECTION

Paper No.: _____

DATE : 4/24/2007

TO SPE OF : ART UNIT 2800 (2829)

SUBJECT : Request for Certificate of Correction on Patent No.: 7,176,703

A response is requested with respect to the accompanying request for a certificate of correction.

Please complete this form and return with file *(PFW), within 7 days to:
Certificates of Correction Branch – 2900 South Tower ste.9A43A
Palm location **7580** or forward ***(IFW)** to scanning using document code **COCX**.

***Ok to enter changes to claims 1 and 11 as req. in COCIN?**

Ernest C. White, LIE (703) 308-9390x122
Certificates of Correction Branch

Thank You For Your Assistance

The request for issuing the above-identified correction(s) is hereby:
Note your decision on the appropriate box.

- ☒ **Approved** — **All** changes apply.
- ☐ **Approved in Part** — Specify below which changes **do not** apply.
- ☐ **Denied** — State the reasons for denial below.

Comments:

_____

_____

_____

_____

_____

Ha Nguyen — **SPE**

2829 — **Art Unit**

UNITED STATES PATENT AND TRADEMARK OFFICE

Commissioner for Patents
United States Patent and Trademark Office
P.O. Box 1450
Alexandria, VA 22313-1450
www.uspto.gov

IPSG, P.C.
P.O. BOX 700640
SAN JOSE CA 95170-0640

COPY MAILED

NOV 0 1 2006

OFFICE OF PETITIONS

In re Application of	:	
RASHID, et al.	:	
Application No. 10/930,186	:	DECISION ON PETITION
Filed: August 31, 2004	:	TO WITHDRAW
Attorney Docket No. RZMI-P114	:	FROM RECORD
	:	

This is a decision on the Request to Withdraw as attorney or agent of record under 37 C.F.R. § 1.36(b), filed August 01, 2006.

The request is **NOT APPROVED**.

A grantable request to withdraw as attorney/agent of record must be signed by every attorney/agent seeking to withdraw or contain a clear indication that one attorney is signing on behalf of another/others. A request to withdraw will not be approved unless at least 30 (thirty) days would remain between the date of approval and the later of the expiration date of a time to file a response or the expiration date of the maximum time period which can be extended under 37 C.F.R. § 1.136(a).

In order to request or take action in a patent matter, the assignee must establish its ownership of the patent to the satisfaction of the Director. In this regard, a Statement under 37 CFR 3.73(b) must have either: (i) documentary evidence of a chain of title from the original owner to the assignee (*e.g.*, copy of an executed assignment), and a statement affirming that the documentary evidence of the chain of title from the original owner to the assignee was or concurrently is being submitted for recordation pursuant to § 3.11; or (ii) a statement specifying where documentary evidence of a chain of title from the original owner to the assignee is recorded in the assignment records of the Office (*e.g.*, reel and frame number). The power of attorney filed on August 31, 2004 does not include one of the above two options.

All future communications from the Office will continue to be directed to the above-listed address until otherwise notified by applicant.

Telephone inquiries concerning this decision should be directed to Patricia Volpe at 571-272-6825.

Volpe for

David Bucci
Petitions Examiner
Office of Petitions

cc: Raza Microelectronics, Inc.
Legal Department
18920 Forge Drive
Cupertino, CA 95014-0701

UNITED STATES PATENT AND TRADEMARK OFFICE

Commissioner for Patents
United States Patent and Trademark Office
P.O. Box 1450
Alexandria, VA 22313-1450
www.uspto.gov

IPSG, P.C.
P.O. BOX 700640
SAN JOSE, CA 95170-0640

COPY MAILED
NOV 0 9 2006
OFFICE OF PETITIONS

In re Application of	:	
HASS	:	
Application No. 10/930,187	:	DECISION ON PETITION
Filed: August 31, 2004	:	TO WITHDRAW
Attorney Docket No. RZMI-P119	:	FROM RECORD
	:	

This is a decision on the Request to Withdraw as attorney or agent of record under 37 C.F.R. § 1.36(b), filed August 01, 2006.

The request is **NOT APPROVED**.

A grantable request to withdraw as attorney/agent of record must be signed by every attorney/agent seeking to withdraw or contain a clear indication that one attorney is signing on behalf of another/others. A request to withdraw will not be approved unless at least 30 (thirty) days would remain between the date of approval and the later of the expiration date of a time to file a response or the expiration date of the maximum time period which can be extended under 37 C.F.R. § 1.136(a).

The Office cannot approve the request at this time. In order to request or take action in a patent matter, the assignee must establish its ownership of the patent to the satisfaction of the Director. In this regard, a Statement under 37 CFR 3.73(b) must have either: (i) documentary evidence of a chain of title from the original owner to the assignee (*e.g.*, copy of an executed assignment), and a statement affirming that the documentary evidence of the chain of title from the original owner to the assignee was or concurrently is being submitted for recordation pursuant to § 3.11; or (ii) a statement specifying where documentary evidence of a chain of title from the original owner to the assignee is recorded in the assignment records of the Office (*e.g.*, reel and frame number). The power of attorney filed on August 31, 2004 does not include one of the above two options.

All future communications from the Office will continue to be directed to the above-listed address until otherwise properly notified by applicant.

There is no outstanding Office action that requires a reply from the applicant.

Telephone inquiries concerning this decision should be directed to Patricia Volpe at 571-272-6825.

Patricia Volpe
Petitions Examiner
Office of Petitions

cc: Raza Microelectronics, Inc.
Legal Department
18920 Forge Drive
Cupertino, CA 95014-0701

UNITED STATES PATENT AND TRADEMARK OFFICE

UNITED STATES DEPARTMENT OF COMMERCE
United States Patent and Trademark Office
Address: COMMISSIONER FOR PATENTS
P.O. Box 1450
Alexandria, Virginia 22313-1450
www.uspto.gov

WELLS ST. JOHN P.S.
601 W. FIRST AVENUE, SUITE 1300
SPOKANE, WA 99201

Mail Date: 04/21/2010

Applicant	: Warren M. Farnworh	: DECISION ON REQUEST FOR
Patent Number	: 7591069	: RECALCULATION of PATENT
Issue Date	: 09/22/2009	: TERM ADJUSTMENT IN VIEW
Appliction No	: 10/930,236	: OF WYETH AND NOTICE OF INTENT TO
Filed	: 08/30/2004	: ISSUE CERTIFICATE OF CORRECTION
		:

The Request for Recalculation is **GRANTED** to the extent indicated.

The patent term adjustment has been determined to be **337** days. The USPTO will *sua sponte* issue a certificate of correction reflecting the amount of PTA days determined by the recalculation.

Prior to the issuance of the certificate of correction, the USPTO will afford patentee an opportunity to be heard and request reconsideration. Accordingly, patentee has **one month or thirty (30) days**, whichever is longer, to file a request for reconsideration of this patent term adjustment calculation. See 35 U.S.C. 154(b)(3)(B)(ii) and 37 CFR 1.322(a)(4). No extensions of time will be granted under 37 CFR 1.136.

Patentee should use document code PET.OP if electronically filing a request for reconsideration of this patent term adjustment calculation. The patentee must also include the information required by 37 CFR 1.705(b)(2) and the fee required by 37 CFR 1.18(e). If patentee does not file a timely request for reconsideration of this patent term adjustment calculation including the information required by 37 CFR 1.705(b)(2) and the fee required by 37 CFR 1.18(e), the USPTO will issue a certificate of correction reflecting the PTA determination noted above.

Patentee should be aware that in order to preserve the right to review in the United States District Court for the District of Columbia of the USPTO patent term adjustment determination, patentee must ensure that he or she also take the steps required under 35 U.S.C. 154(b)(4)(A) in a timely manner. Nothing in the request for recalculation should be construed as providing an alternative time frame for commencing a civil action under 35 U.S.C. 154(b)(4)(A).

Any questions concerning this decision should be directed to the Office of Patent Legal Administration at 571-272-7702.

UNITED STATES PATENT AND TRADEMARK OFFICE

Commissioner for Patents
United States Patent and Trademark Office
P.O. Box 1450
Alexandria, VA 22313-1450
www.uspto.gov

HITT GAINES, PC
ALCATEL-LUCENT
PO BOX 832570
RICHARDSON, TX 75083

MAILED

APR 27 2009

OFFICE OF PETITIONS
ON PETITION

In re Application of
Christi Kay Madsen et al
Application No. 10/930,248
Filed: August 31, 2004
Attorney Docket No. MADSEN 31-2

This is a decision on the petition filed April 6, 2009 under 37 CFR 1.137(b), to revive the above-identified application.

The petition is **GRANTED.**

The above-identified application became abandoned for failure to submit the formal drawings in a timely manner in reply to the Notice of Allowance mailed November 10, 2008, which set a statutory period for reply of three (3) months. Accordingly, the above-identified application became abandoned on February 11, 2008.

The petition satisfies the conditions for revival pursuant to the provisions of 37 CFR 1.137(b) in that (1) the reply in the form of formal drawings; (2) the petition fee; and (3) the required statement of unintentional delay have been received.

Telephone inquiries concerning this decision should be directed to the undersigned at (571) 272-3210.

This matter is being referred to the Office of Data Management for further processing.

Irvin Dingle
Petitions Examiner
Office of Petitions

UNITED STATES PATENT AND TRADEMARK OFFICE

UNITED STATES DEPARTMENT OF COMMERCE
United States Patent and Trademark Office
Address: COMMISSIONER FOR PATENTS
P.O. Box 1450
Alexandria, Virginia 22313-1450
www.uspto.gov

APPL NO.	FILING OR 371 (c) DATE	ART UNIT	FIL FEE REC'D	ATTY.DOCKET NO	DRAWINGS	TOT CLMS	IND CLMS
10/930,277	08/30/2004	2881	770	HSJ920040131US1	3	13	3

CONFIRMATION NO. 7290

CORRECTED FILING RECEIPT

OC000000015007233

48583
BRACEWELL & PATTERSON, LLP
PO BOX 61389
HOUSTON, TX 77208-1389

Date Mailed: 01/21/2005

Receipt is acknowledged of this regular Patent Application. It will be considered in its order and you will be notified as to the results of the examination. Be sure to provide the U.S. APPLICATION NUMBER, FILING DATE, NAME OF APPLICANT, and TITLE OF INVENTION when inquiring about this application. Fees transmitted by check or draft are subject to collection. Please verify the accuracy of the data presented on this receipt. **If an error is noted on this Filing Receipt, please write to the Office of Initial Patent Examination's Filing Receipt Corrections, facsimile number 703-746-9195. Please provide a copy of this Filing Receipt with the changes noted thereon. If you received a "Notice to File Missing Parts" for this application, please submit any corrections to this Filing Receipt with your reply to the Notice. When the USPTO processes the reply to the Notice, the USPTO will generate another Filing Receipt incorporating the requested corrections (if appropriate).**

Applicant(s)

Michael Feldbaum, San Jose, CA;
Hung-Chin Guthrie, Saratoga, CA;
Wipul Pemsiri Jayasekara, Los Gatos, CA;
Aron Pentek, San Jose, CA;

Assignment For Published Patent Application

Hitachi Global Storage Technologies Netherlands B.V., Amsterdam, NETHERLANDS

Power of Attorney: None

Domestic Priority data as claimed by applicant

Foreign Applications

If Required, Foreign Filing License Granted: 10/29/2004

The country code and number of your priority application, to be used for filing abroad under the Paris Convention, is US10/930,277

Projected Publication Date: 03/02/2006

Non-Publication Request: No

Early Publication Request: No

Title

System, method, and apparatus for ion beam etching process stability using a reference for time scaling subsequent steps

Preliminary Class

250

LICENSE FOR FOREIGN FILING UNDER
Title 35, United States Code, Section 184
Title 37, Code of Federal Regulations, 5.11 & 5.15

GRANTED

The applicant has been granted a license under 35 U.S.C. 184, if the phrase "IF REQUIRED, FOREIGN FILING LICENSE GRANTED" followed by a date appears on this form. Such licenses are issued in all applications where the conditions for issuance of a license have been met, regardless of whether or not a license may be required as set forth in 37 CFR 5.15. The scope and limitations of this license are set forth in 37 CFR 5.15(a) unless an earlier license has been issued under 37 CFR 5.15(b). The license is subject to revocation upon written notification. The date indicated is the effective date of the license, unless an earlier license of similar scope has been granted under 37 CFR 5.13 or 5.14.

This license is to be retained by the licensee and may be used at any time on or after the effective date thereof unless it is revoked. This license is automatically transferred to any related applications(s) filed under 37 CFR 1.53(d). This license is not retroactive.

The grant of a license does not in any way lessen the responsibility of a licensee for the security of the subject matter as imposed by any Government contract or the provisions of existing laws relating to espionage and the national security or the export of technical data. Licensees should apprise themselves of current regulations especially with respect to certain countries, of other agencies, particularly the Office of Defense Trade Controls, Department of State (with respect to Arms, Munitions and Implements of War (22 CFR 121-128)); the Office of Export Administration, Department of Commerce (15 CFR 370.10 (j)); the Office of Foreign Assets Control, Department of Treasury (31 CFR Parts 500+) and the Department of Energy.

NOT GRANTED

No license under 35 U.S.C. 184 has been granted at this time, if the phrase "IF REQUIRED, FOREIGN FILING LICENSE GRANTED" DOES NOT appear on this form. Applicant may still petition for a license under 37 CFR 5.12, if a license is desired before the expiration of 6 months from the filing date of the application. If 6 months has lapsed from the filing date of this application and the licensee has not received any indication of a secrecy order under 35 U.S.C. 181, the licensee may foreign file the application pursuant to 37 CFR 5.15(b).

UNITED STATES PATENT AND TRADEMARK OFFICE

Commissioner for Patents
United States Patent and Trademark Office
P.O. Box 1450
Alexandria, VA 22313-1450
www.uspto.gov

JONATHAN T. KAPLAN
ATTORNEY AT LAW
140 NASSAU STREET
NEW YORK NY 10038-1501

COPY MAILED

FEB 2 5 2005

OFFICE OF PETITIONS

In re Application of
Sonntag
Application No. 10/930,291
Filed: August 31, 2004
Attorney Docket No. 06816.0606
FOR: METHOD AND APPARATUS FOR INTEGRATED CHANNEL CHARACTERIZATION

: ON PETITION

This is a decision on the petition under 37 CFR 1.10(d), filed September 13, 2004, requesting that the above-identified application be accorded a filing date of August 31, 2004.

Petitioner assumed that the Office accorded the above-identified application an August 30, 2004 filing date because an Office generated date stamp affixed to the application's postcard receipt cited August 30, 2004 as the date of receipt of the application. However, the application was processed with an August 31, 2004 filing date.

Office records indicate that the Office of Initial Patent Examination mailed an updated filing receipt showing **August 31, 2004** as the filing date for the above-identified application on November 10, 2004.

As the filing date is correct, the petition under 37 CFR 1.10(d) is **dismissed as moot**. No petition fee has been or will be charged.

The application will be forwarded to Technology Center 2600 for examination in due course.

Telephone inquiries concerning this matter should be directed to the undersigned at (571)272-3230.

E. Shirene Willis
Senior Petitions Attorney
Office of Petitions
Office of the Deputy Commissioner
for Patent Examination Policy

UNITED STATES PATENT AND TRADEMARK OFFICE

Commissioner for Patents
United States Patent and Trademark Office
P.O. Box 1450
Alexandria, VA 22313-1450
www.uspto.gov

CORNING INCORPORATED
SP-TI-3-1
CORNING NY 14831

COPY MAILED

JAN 29 2008

OFFICE OF PETITIONS

In re Application of	:	
William J. Miller et al.	:	
Application No. 10/930,294	:	ON PETITION
Filed: August 31, 2004	:	
Attorney Docket No. SP04-085	:	

This is a decision on the petition under 37 CFR 1.137(b), filed March 12, 2007, to revive the above-identified application.

The petition is **GRANTED**.

The application became abandoned for failure to reply in a timely manner to the Restriction Requirement, mailed April 4, 2006, which set a shortened statutory period for reply of one (1) month or thirty (30) days (whichever is later). No extensions of time under the provisions of 37 CFR 1.136(a) was obtained. Accordingly, the application became abandoned on May 5, 2006. The Notice of Abandonment was mailed November 17, 2006.

The petition satisfies the requirements of 37 CFR 1.137(b) in that petitioner has supplied (1) the reply in the form of an election; (2) the petition fee of $1,500; and (3) an adequate statement of unintentional delay.

Telephone inquiries concerning this decision should be directed to Terri Williams at (571) 272-2991.

The application file is being referred to Technology Center AU 2883 for appropriate action on the concurrently filed election.

Liana Walsh
Petition Examiner
Office of Petitions

UNITED STATES PATENT AND TRADEMARK OFFICE

Commissioner for Patents
United States Patent and Trademark Office
P.O. Box 1450
Alexandria, VA 22313-1450
www.uspto.gov

DURA AUTOMOTIVE SYSTEMS,
INC.
2791 RESEARCH DRIVE
ROCHESTER HILLS MI 48309

COPY MAILED

SEP 28 2007

OFFICE OF PETITIONS

In re Application of

Voegeli, et al. :

Application No. 10/930,315

: DECISION ON PETITION

Filed: August 31, 2004

:

Attorney Docket No. 04-13

This is a decision on the petition under 37 CFR 1.137(b), filed, March 2, 2007, to revive the above-identified application.

The petition is **GRANTED**.

The above-cited application became abandoned for failure to reply in a timely manner to the non-final Office action mailed August 22, 2006, which set a shortened statutory period for reply of three (3) months from its mailing date. No extension of time pursuant to 37 CFR 1.136(a) was obtained within the allowable period. Accordingly, the application became abandoned on November 23, 2006.

The amendment filed March 2, 2007, is noted.

The request for an extension of time within the third month made March 2, 2007, is noted, but cannot be granted as the request was made outside the maximum statutory period set for reply. The amount of $1020.00 will be refunded in due course.

The application is being forwarded to Technology Center 3600, GAU 3652 for further processing.

Telephone inquiries concerning this decision should be directed to the undersigned at (571) 272-3222.

Kenya A. McLaughlin
Petitions Attorney
Office of Petitions

UNITED STATES PATENT AND TRADEMARK OFFICE

Commissioner for Patents
United States Patent and Trademark Office
P.O. Box 1450
Alexandria, VA 22313-1450
www.uspto.gov

Patent No. : 7,377,936
Ser. No. : 10/930,321
Inventor(s) : John Gainor, et. al.
Issued : May 27, 2008
Title : RETRIEVABLE SEPTAL DEFECT CLOSURE DEVICE
Docket No. : EV3.067C1

Re: Request for Certificate of Correction

Consideration has been given your request for the issuance of a certificate of correction for the above-identified patent under the provisions of Rule(s) 1.322.

Assignees' names and addresses (assignment data) printed in a patent, are based *solely* on information supplied in the appropriate space for identifying the assignment data, i.e., item 3 of the Issue Fee Transmittal Form PTOL-85B. Granting of a request under 37 CFR 3.81(b) is required to correct applicant's error providing ***incorrect or erroneous*** assignment data, *before* issuance of a Certificate of Correction, under 37 CFR 1.323 *(see Manual of Patent Examining Procedures (M.P.E.P) Chp.1400, sect. 1481).* This procedure is required *at any time after the issue fee is paid*, including after issuance of the patent.

In view of the foregoing, your request, in this matter, is hereby denied.

A request to correct the Assignee under 37 CFR 3.81(b) should include:

A. **the processing fee set forth in 37 CFR 1.117(h) (currently $130);**
B. a statement that the failure to include the correct assignee name on the PTOL-85B was inadvertent; and
C. a copy of the Notice of Recordation of Assignment Document, reflecting the reel and frame number where the assignment(s) is recorded and/or reflecting proof of *the date* the assignment was submitted for recordation.

In the Request, Applicant(s) may request that the file be forwarded to Certificates of Correction Branch, for issuance of a Certificate of Correction, if the Request is granted.

Any request under 37 CFR 3.81(b) should be directed to the following address or facsimile number:

By mail: Mail Stop PETITIONS
Commissioner for Patents
Post Office Box 1450
Alexandria, VA 22313-1450

By hand: Customer Service Window
Mail Stop Petitions
Randolph Building
40l Dulany Street
Alexandria, VA 22314

By fax: (703) 872-9306
ATTN: Office of Petitions

If a fee (currently $100) was previously submitted for consideration of a Request for Certificate of Correction, under CFR 1.323, to correct assignment data, , no additional fee is required.

A certificate of correction will be issued to correct the remaining errors noted in your request.

Eva James
For Mary Diggs
Decisions & Certificates
of Correction Branch
(703) **308-9390 ext. 124** or 125

Terry K. Tullis
Knobbe, Martens, Olson & bear, LLP
2040 Main St, 14th Floor
Irvine, CA 92614

UNITED STATES PATENT AND TRADEMARK OFFICE

Commissioner for Patents
United States Patent and Trademark Office
P.O. Box 1450
Alexandria, VA 22313-1450
www.uspto.gov

KNOBBE MARTENS OLSON & BEAR LLP
2040 MAIN STREET
FOURTEENTH FLOOR
IRVINE CA 92614

COPY MAILED

MAR 05 2009

OFFICE OF PETITIONS

DECISION ON PETITION

In re Patent No. 7,377,936 B2 :
Issue Date: May 27, 2008 :
Application No. 10/930,321 :
Filed: August 31, 2004 :
Attorney Docket No. EV3.067C1 :

This is a decision on the Petition to Correct Assignee, filed November 7, 2008. The Petition has been treated as a petition under 37 CFR 3.81. A completed Certificate of Correction form showing the requested correction was previously submitted on September 29, 2008.

The petition under 37 CFR 3.81 is **GRANTED**.

Petitioner requests, in effect, that the Title Page of the above-identified patent be corrected via issuance of a Certificate of Correction to correct the name of the assignee identified thereon from "ev3, Inc., Plymouth, MN (US)" to:

--ev3 Endovascular, Inc., Plymouth, MN (US)--.

37 CFR 3.81(b), effective June 25, 2004, reads:

> *After payment of the issue fee:* Any request for issuance of an application in the name of the assignee submitted after the date of payment of the issue fee, and any request for a patent to be corrected to state the name of the assignee, must state that the assignment was submitted for recordation as set forth in § 3.11 before issuance of the patent, and must include a request for a certificate of correction under § 1.323 of this chapter (accompanied by the fee set forth in § 1.20(a) and the processing fee set forth in § 1.17(i) of this chapter.

The requisite $100.00 fee (Fee Code 1811), as set forth under 37 CFR 1.120(a), was previously paid. The requisite $130.00 processing fee (Fee Code 1464), as set forth under 37 CFR 1.17(i), has been charged to petitioner's deposit account as authorized in the Petition. Office assignment records are consistent with the requested correction. Accordingly, as the petition complies with the provisions of 37 CFR 3.81(b), it is appropriate for the Office to issue a Certificate of Correction in accordance with the subject content of the Certificate of Correction form previously submitted.

Inquiries related to this communication should be directed to Brian W. Brown at (571) 272-5338.

Any questions concerning the issuance of a Certificate of Correction should be directed to the Certificates of Correction Branch at (571) 272-4200.

The matter is being referred to the Certificate of Corrections Branch for processing of a Certificate of Correction in US Patent 7,377,936 B2.

Brian W. Brown
Petitions Examiner
Office of Petitions

UNITED STATES PATENT AND TRADEMARK OFFICE

Commissioner for Patents
United States Patent and Trademark Office
P.O. Box 1450
Alexandria, VA 22313-1450
www.uspto.gov

O'KEEFE, EGAN, PETERMAN & ENDERS LLP
1101 CAPITAL OF TEXAS HIGHWAY SOUTH
#C200
AUSTIN, TX 78746

COPY MAILED

AUG 3 1 2009

OFFICE OF PETITIONS

In re Application of	:	
Dale A. Harrison	:	
Application No. 10/930,339	:	ON PETITION
Filed: August 31, 2004	:	
Attorney Docket No. METR:006	:	

This is a decision on the petition under the unintentional provisions of 37 CFR 1.137(b), filed June 23, 2009, to revive the above-identified application.

The application became abandoned for failure to timely file a reply within the meaning of 37 CFR 1.113 to the final Office action of November 13, 2009. The proposed reply required for consideration of a petition to revive must be a Notice of Appeal (and appeal fee required by 37 CFR 41.20(b)(2), an amendment that *prima facie* places the application in condition for allowance, a Request for Continued Examination and submission (37 CFR 1.114), or the filing of a continuing application under 37 CFR 1.53(b). See MPEP 711.03(c)(II)(A)(2). No extensions of time pursuant to the provisions of 37 CFR 1.136(a) were obtained. Accordingly, the date of abandonment of this application is February 14, 2009.

The petition satisfies the requirements of 37 CFR 1.137(b) in that petitioner has supplied (1) the reply in the form of a Request for Continued Examination (RCE) and fee of $405, and the submission required by 37 CFR 1.114 filed December 29, 2008; (2) the petition fee of $810; and (3) a proper statement of unintentional delay.

In view of the above, the petition is **GRANTED**.

Telephone inquiries concerning this decision should be directed to the undersigned at (571) 272-1642. All other inquiries concerning the examination or status of this application should be directed to the Technology Center.

This application is being referred to Technology Center AU 2884 for processing of the RCE and for appropriate action by the Examiner in the normal course of business on the amendment submitted in accordance with 37 CFR 1.114.

/AMW/
April M. Wise
Petitions Examiner
Office of Petitions

UNITED STATES PATENT AND TRADEMARK OFFICE

UNITED STATES DEPARTMENT OF COMMERCE
United States Patent and Trademark Office
Address: COMMISSIONER FOR PATENTS
P.O. Box 1450
Alexandria, Virginia 22313-1450
www.uspto.gov

HOLLINGSWORTH & FUNK
8500 Normandale Lake Blvd
SUITE 320
MINNEAPOLIS, MN 55437

Mail Date: 04/21/2010

Applicant	: Kent Lee	: DECISION ON REQUEST FOR
Patent Number	: 7662101	: RECALCULATION of PATENT
Issue Date	: 02/16/2010	: TERM ADJUSTMENT IN VIEW
Appliction No	: 10/930,346	: OF WYETH AND NOTICE OF INTENT TO
Filed	: 08/31/2004	: ISSUE CERTIFICATE OF CORRECTION
		:

The Request for Recalculation is **GRANTED** to the extent indicated.

The patent term adjustment has been determined to be **1449** days. The USPTO will *sua sponte* issue a certificate of correction reflecting the amount of PTA days determined by the recalculation.

Prior to the issuance of the certificate of correction, the USPTO will afford patentee an opportunity to be heard and request reconsideration. Accordingly, patentee has **one month or thirty (30) days**, whichever is longer, to file a request for reconsideration of this patent term adjustment calculation. See 35 U.S.C. 154(b)(3)(B)(ii) and 37 CFR 1.322(a)(4). No extensions of time will be granted under 37 CFR 1.136.

Patentee should use document code PET.OP if electronically filing a request for reconsideration of this patent term adjustment calculation. The patentee must also include the information required by 37 CFR 1.705(b)(2) and the fee required by 37 CFR 1.18(e). If patentee does not file a timely request for reconsideration of this patent term adjustment calculation including the information required by 37 CFR 1.705(b)(2) and the fee required by 37 CFR 1.18(e), the USPTO will issue a certificate of correction reflecting the PTA determination noted above.

Patentee should be aware that in order to preserve the right to review in the United States District Court for the District of Columbia of the USPTO patent term adjustment determination, patentee must ensure that he or she also take the steps required under 35 U.S.C. 154(b)(4)(A) in a timely manner. Nothing in the request for recalculation should be construed as providing an alternative time frame for commencing a civil action under 35 U.S.C. 154(b)(4)(A).

Any questions concerning this decision should be directed to the Office of Patent Legal Administration at 571-272-7702.

UNITED STATES PATENT AND TRADEMARK OFFICE

UNITED STATES DEPARTMENT OF COMMERCE
United States Patent and Trademark Office
Address: COMMISSIONER FOR PATENTS
P.O. Box 1450
Alexandria, Virginia 22313-1450
www.uspto.gov

HOLLINGSWORTH & FUNK
8500 Normandale Lake Blvd
SUITE 320
MINNEAPOLIS, MN 55437

Mail Date: 05/18/2010

Applicant : Kent Lee
Patent Number : 7662101
Issue Date : 02/16/2010
Application No : 10/930,346
Filed : 08/31/2004

: NOTICE CONCERNING IMPROPER
: CALCULATION OF PATENT TERM
: ADJUSTMENT BASED UPON USPTO
: IMPROPERLY MEASURING REDUCTION
: PERIOD UNDER 37 CFR 1.704(c)(10).

The United States Patent and Trademark Office (USPTO) discovered that in processing the recent recalculation decisions mailed in response to patentee's filed Request for Recalculation of Patent Term Adjustment in view of Wyeth, the USPTO improperly measured the reduction period for reductions under 37 CFR 1.704(c)(10). Pursuant to 37 CFR 1.704(c)(10), patentee's reduction begins on the date of filing the amendment under 37 CFR 1.312 ("1.312 amendment") or other related paper and ends on the date that the Office mails a response to the filing of the 1.312 amendment or other paper. It has been discovered that during the recalculation, the calculation failed to the limit the reduction to the mail date of the response to the 1.312 amendment or other paper. Accordingly, patentee's reductions were greater than warranted.

This notice **VACATES** the previous GRANTED request for recalculation and provides patentee with a revised GRANTED recalculation.

The patent term adjustment has been determined to be **1483** days. The USPTO will *sua sponte* issue a certificate of correction reflecting the amount of patent term adjustment (PTA) days determined by the recalculation.

Prior to the issuance of the certificate of correction, the USPTO will afford patentee an opportunity to be heard and request reconsideration. Accordingly, patentee has **one month or thirty (30) days** from the mail date of this notice, whichever is longer, to file a request for reconsideration of this PTA calculation. See 35 U.S.C. § 154(b)(3)(B)(ii) and 37 CFR 1.322(a)(4).

Patentee should use document code PET.OP if electronically filing a request for reconsideration of this PTA calculation. The patentee must also include the information required by 37 CFR 1.705(b)(2), and the fee required by 37 CFR 1.18(e). If patentee does not file a timely request for reconsideration of this PTA calculation, including the information required by 37 CFR 1.705(b)(2) and the fee required by 37 CFR 1.18(e), the USPTO will issue a certificate of correction reflecting the PTA determination noted above.

Patentee should be aware that in order to preserve the right of review of the USPTO's PTA determination in the United States District Court for the District of Columbia, patentee must ensure that the steps required under 35 U.S.C. § 154 (b)(4) are taken in a timely manner. Nothing in the request for recalculation should be construed as providing an alternative time frame for commencing a civil action under 35 U.S.C. § 154(b)(4).

UNITED STATES PATENT AND TRADEMARK OFFICE

Commissioner for Patents
United States Patent and Trademark Office
P.O. Box 1450
Alexandria, VA 22313-1450
www.uspto.gov

NOV - 2 2004

MAILED

NOV - 2 2004

OFFICE OF THE DIRECTOR
TC 3600

DOROTHY S. MORSE, ESQ.
515 Park Drive, NW
Bradenton, FL 34209

In re application of
Craig Allen Tafoya
Application No. 10/930,389
Filed: August 31, 2004
For: INFINITELY VARIABLE GEARED TRANSMISSION

DECISION ON PETITION TO MAKE SPECIAL (APPLICANT'S AGE)

This is a decision on the petition submitted on August 31, 2004, under 37 CFR 1.102 (c) to make the above-identified application special under the accelerated examination procedure set forth in MPEP 708.02, Section IV: Applicant's Age.

The petition is **GRANTED**.

An application may be accorded special status upon the filing of a petition providing evidence showing that the applicant is at least 65 years old. Such a showing may be provided by evidence such as a birth certificate or a statement from the applicant.

The evidence submitted with the petition is a copy of a birth certificate for Mr. Tafoya indicating that he is at least 65 years of age.

The examiner is directed (1) to make an interference search for possible interfering applications, (2) to promptly examine this application out of turn, and (3) if any interfering application is discovered, to examine such application simultaneously and state in the first official letter of such application that it is being taken out of turn because of a possible interference.

Petitioner is advised that this application will continue to be special, throughout its entire prosecution and pendency, including interference or appeal, if any, only if petitioner makes a prompt ***bona fide*** effort, in response to each Office action, to place the application in condition for allowance, even if it is necessary to conduct an interview with the examiner to accomplish this purpose.

SUMMARY: Petition to Make Special **Granted.**

Steven N. Meyers
Special Programs Examiner
Patent Technology Center 3600
(703) 308-3868

SNM/pav: 10/27/04

UNITED STATES PATENT AND TRADEMARK OFFICE

COMMISSIONER FOR PATENTS
UNITED STATES PATENT AND TRADEMARK OFFICE
P.O. BOX 1450
ALEXANDRIA, VA 22313-1450
www.uspto.gov

Robert E. Kleve
1103 24th Ave. S.
Grand Forks, ND 58201

COPY MAILED

NOV 18 2005

OFFICE OF PETITIONS

In re Application of :
Young, et al. : DECISION ON PETITION
Application No. 10/930,403 :
Filed: August 31, 2004 :
For: STORAGE APPARATUS :

This is a decision on the petition under 37 CFR 1.137(b), filed October 14, 2005 (and supplemented October 24, 2005) to revive the above-identified application.

The petition is **GRANTED**.

This application became abandoned December 28, 2004 for failure to timely reply to the Notice to File Corrected Application Papers (Notice) mailed October 27, 2004. The Notice set a two month shortened statutory period of time for reply. No petition for extension of time in accordance with 37 C.F.R. § 1.136 was timely submitted. Notice of Abandonment was mailed July 12, 2005.

A grantable petition pursuant to 37 C.F.R. § 1.137(b) must be accompanied by: (1) the required reply to the outstanding Office action or notice, unless previously filed; (2) the petition fee as set forth in 37 C.F.R. § 1.17(m); (3) a statement that the entire delay in filing the required reply from the due date for the reply until the filing of a grantable petition pursuant to 37 C.F.R. § 1.137(b) was unintentional; and (4) any terminal disclaimer (and fee set forth in 37 C.F.R. § 1.20(d)) required pursuant to 37 C.F.R. § 1.137(c).

The instant petition has been reviewed and found in compliance with the provisions of 37 C.F.R. § 1.137(b). Accordingly, the failure to timely submit a proper reply to the Notice is accepted as having been unintentionally delayed.

This application will be forwarded to Technology Center 3600 for further processing.

Telephone inquiries concerning this matter may be directed to the undersigned at (571) 272-3205.

Alesia M. Brown
Petitions Attorney
Office of Petitions

UNITED STATES PATENT AND TRADEMARK OFFICE

UNITED STATES DEPARTMENT OF COMMERCE
United States Patent and Trademark Office
Address: COMMISSIONER FOR PATENTS
P.O. Box 1450
Alexandria, Virginia 22313-1450
www.uspto.gov

CARLSON, GASKEY & OLDS, P.C.
400 WEST MAPLE ROAD
SUITE 350
BIRMINGHAM, MI 48009

Mail Date: 04/21/2010

Applicant	: William Martin Silvis	: DECISION ON REQUEST FOR
Patent Number	: 7574307	: RECALCULATION of PATENT
Issue Date	: 08/11/2009	: TERM ADJUSTMENT IN VIEW
Appliction No	: 10/930,420	: OF WYETH AND NOTICE OF INTENT TO
Filed	: 08/31/2004	: ISSUE CERTIFICATE OF CORRECTION
		:

The Request for Recalculation is **GRANTED** to the extent indicated.

The patent term adjustment has been determined to be **1290** days. The USPTO will *sua sponte* issue a certificate of correction reflecting the amount of PTA days determined by the recalculation.

Prior to the issuance of the certificate of correction, the USPTO will afford patentee an opportunity to be heard and request reconsideration. Accordingly, patentee has **one month or thirty (30) days**, whichever is longer, to file a request for reconsideration of this patent term adjustment calculation. See 35 U.S.C. 154(b)(3)(B)(ii) and 37 CFR 1.322(a)(4). No extensions of time will be granted under 37 CFR 1.136.

Patentee should use document code PET.OP if electronically filing a request for reconsideration of this patent term adjustment calculation. The patentee must also include the information required by 37 CFR 1.705(b)(2) and the fee required by 37 CFR 1.18(e). If patentee does not file a timely request for reconsideration of this patent term adjustment calculation including the information required by 37 CFR 1.705(b)(2) and the fee required by 37 CFR 1.18(e), the USPTO will issue a certificate of correction reflecting the PTA determination noted above.

Patentee should be aware that in order to preserve the right to review in the United States District Court for the District of Columbia of the USPTO patent term adjustment determination, patentee must ensure that he or she also take the steps required under 35 U.S.C. 154(b)(4)(A) in a timely manner. Nothing in the request for recalculation should be construed as providing an alternative time frame for commencing a civil action under 35 U.S.C. 154(b)(4)(A).

Any questions concerning this decision should be directed to the Office of Patent Legal Administration at 571-272-7702.

UNITED STATES PATENT AND TRADEMARK OFFICE

Commissioner for Patents
United States Patent and Trademark Office
P.O. Box 1450
Alexandria, VA 22313-1450
www.uspto.gov

PALMER & DODGE, LLP
KATHLEEN M. WILLIAMS
111 HUNTINGTON AVENUE
BOSTON MA 02199

COPY MAILED
FEB 29 2008
OFFICE OF PETITIONS

In re Application of	:	
SEGAL, Shimon et al.	:	
Application No. 10/930,429	:	DECISION ON PETITION
Filed: August 31, 2004	:	TO WITHDRAW
Attorney Docket No. **20229/2002**	:	FROM RECORD
	:	

This is a decision on the Request to Withdraw as attorney or agent under 37 C.F.R. § 1.36(b) filed December 27, 2007.

The request is **NOT APPROVED**.

A review of the file record indicates that customer number 21874 does not have power of attorney in this patent application. See 37 C.F.R. § 10.40. The attorneys requesting withdrawal by customer #21874 must have originally been appointed by the same customer in the oath/declaration. Accordingly, the request to withdraw under 37 C.F.R. § 1.36(b) is not applicable.

All future communications from the Office will continue to be directed to customer number 29933 until otherwise properly notified by the applicant.

Telephone inquires concerning this decision should be directed to Tredelle Jackson at 571-272-2783.

Monica A. Graves
Petitions Examiner
Office of Petitions

cc: **SHIMON SEGAL, MD.**
99 POND AVENUE, #414
BROOKLINE, MA 02445

UNITED STATES PATENT AND TRADEMARK OFFICE

Commissioner for Patents
United States Patent and Trademark Office
P.O. Box 1450
Alexandria, VA 22313-1450
www.uspto.gov

IPSG, P.C.
P.O. BOX 700640
SAN JOSE CA 95170-0640

COPY MAILED

NOV 13 2006

OFFICE OF PETITIONS

In re Application of
HASS
Application No. 10/930,455
Filed: August 31, 2004
Attorney Docket No. RZMI-P108

DECISION ON PETITION
TO WITHDRAW
FROM RECORD

This is a decision on the Request to Withdraw as attorney or agent of record under 37 C.F.R. § 1.36(b), filed August 1, 2006.

The request is **NOT APPROVED**.

A grantable request to withdraw as attorney/agent of record must be signed by every attorney/agent seeking to withdraw or contain a clear indication that one attorney is signing on behalf of another/others. A request to withdraw will not be approved unless at least 30 (thirty) days would remain between the date of approval and the later of the expiration date of a time to file a response or the expiration date of the maximum time period which can be extended under 37 C.F.R. § 1.136(a).

The Office cannot approve the request at this time since the reasons provided do not meet any of the conditions under the mandatory or permissive categories enumerated in 37 CFR 10.40. Section 10.40 of Title 37 of the Code of Federal Regulation states, "[a] practitioner shall not withdraw from employment in a proceeding before the Office without permission from the Office[.]" More specifically, 37 CFR 10.40 states, "[i]f paragraph (b) of this section is not applicable, a practitioner may not request permission to withdraw in matter pending before the Office unless such request or such withdrawal is" for one the permissive reasons listed in 37 CFR 10.40(c). The reasons set forth in the request, "at the request of Raza Microelectronics, Inc.", does not meet any of the conditions set forth in 37 CFR 10.40.

In order to request or take action in a patent matter, the assignee must establish its ownership of the patent to the satisfaction of the Director. In this regard, a Statement under 37 CFR 3.73(b) must have either: (i) documentary evidence of a chain of title from the original owner to the assignee (*e.g.*, copy of an executed assignment), and a statement affirming that the documentary evidence of the chain of title from the original owner to the assignee was or concurrently is being

submitted for recordation pursuant to § 3.11; or (ii) a statement specifying where documentary evidence of a chain of title from the original owner to the assignee is recorded in the assignment records of the Office (*e.g.*, reel and frame number).

All future communications from the Office will continue to be directed to the above-listed address until otherwise notified by applicant.

Telephone inquiries concerning this decision should be directed to the undersigned at 571-272-7253.

Monica A. Graves
Petitions Examiner
Office of Petitions

cc: **Raza Microelectronics, Inc.**
Legal Department
18920 Forge Drive
Cupertino, CA 95014-0701

UNITED STATES PATENT AND TRADEMARK OFFICE

Commissioner for Patents
United States Patent and Trademark Office
P.O. Box 1450
Alexandria, VA 22313-1450
www.uspto.gov

IPSG, P.C.
P.O. BOX 700640
SAN JOSE CA 95170-0640

COPY MAILED

NOV 0 1 2006

OFFICE OF PETITIONS

In re Application of	:	
HASS	:	
Application No. 10/930,456	:	DECISION ON PETITION
Filed: August 31, 2004	:	TO WITHDRAW
Attorney Docket No. RZMI-P120	:	FROM RECORD
	:	

This is a decision on the Request to Withdraw as attorney or agent of record under 37 C.F.R. § 1.36(b), filed August 01, 2006.

The request is **NOT APPROVED**.

A grantable request to withdraw as attorney/agent of record must be signed by every attorney/agent seeking to withdraw or contain a clear indication that one attorney is signing on behalf of another/others. A request to withdraw will not be approved unless at least 30 (thirty) days would remain between the date of approval and the later of the expiration date of a time to file a response or the expiration date of the maximum time period which can be extended under 37 C.F.R. § 1.136(a).

In order to request or take action in a patent matter, the assignee must establish its ownership of the patent to the satisfaction of the Director. In this regard, a Statement under 37 CFR 3.73(b) must have either: (i) documentary evidence of a chain of title from the original owner to the assignee (*e.g.*, copy of an executed assignment), and a statement affirming that the documentary evidence of the chain of title from the original owner to the assignee was or concurrently is being submitted for recordation pursuant to § 3.11; or (ii) a statement specifying where documentary evidence of a chain of title from the original owner to the assignee is recorded in the assignment records of the Office (*e.g.*, reel and frame number). The power of attorney filed on August 31, 2004 does not include one of the above two options.

All future communications from the Office will continue to be directed to the above-listed address until otherwise notified by applicant.

Telephone inquiries concerning this decision should be directed to Patricia Volpe at 571-272-6825.

PAVolpe for

David Bucci
Petitions Examiner
Office of Petitions

cc: Raza Microelectronics, Inc.
Legal Department
18920 Forge Drive
Cupertino, CA 95014-0701

UNITED STATES PATENT AND TRADEMARK OFFICE

Commissioner for Patents
United States Patent and Trademark Office
P.O. Box 1450
Alexandria, VA 22313-1450
www.uspto.gov

Fellers Snider Blankenship Bailey & Tippens, PC
Suite 1700
100 North Broadway
Oklahoma City, OK 73102

COPY MAILED

NOV 0 6 2008

OFFICE OF PETITIONS

In re Application of	:	
Mark A. Thiessen	:	
Application No. 10/930,474	:	DECISION ON PETITION
Filed: August 31, 2004	:	
Attorney Docket No. STL11734	:	

This is a decision on the petition under 37 CFR 1.137(b) filed on September 12, 2008, to revive the above-identified application.

The application became abandoned for failure to timely respond to the Notice of Allowance and Fee(s) Due mailed September 12, 2008.

37 CFR 1.137(b)(3) requires a statement that the entire delay in filing the required reply from the due date for the reply until the filing of a grantable petition pursuant to 37 CFR 1.137(b) was unintentional. Since the statement contained in the instant petition varies from the language required by 37 CFR 1.137(b)(3), the statement is being construed as the statement required by 37 CFR 1.137(b)(3) and petitioner must notify the Office if this is **not** a correct interpretation of the statement.

The petition satisfies the requirements of 37 CFR 1.137(b) in that petitioner has supplied (1) the reply in the form of $1,440 for payment of the issue fee and $300 for payment of the publication fee; (2) the petition fee of $1,540; and (3) an adequate statement of unintentional delay. Therefore, the petition is **GRANTED**.

This application file is being referred to the Office of Data Management to be processed into a patent.

Telephone inquiries concerning this decision should be directed to the undersigned at (571) 272-3226.

Andrea Smith
Petitions Examiner
Office of Petitions

UNITED STATES PATENT AND TRADEMARK OFFICE

UNITED STATES DEPARTMENT OF COMMERCE
United States Patent and Trademark Office
Address: COMMISSIONER FOR PATENTS
P.O. Box 1450
Alexandria, Virginia 22313-1450
www.uspto.gov

HOLLINGSWORTH & FUNK
8500 Normandale Lake Blvd
SUITE 320
MINNEAPOLIS, MN 55437

Mail Date: 04/21/2010

Applicant	: Jeffrey E. Stahmann	: DECISION ON REQUEST FOR
Patent Number	: 7575553	: RECALCULATION of PATENT
Issue Date	: 08/18/2009	: TERM ADJUSTMENT IN VIEW
Appliction No	: 10/930,508	: OF WYETH AND NOTICE OF INTENT TO
Filed	: 08/31/2004	: ISSUE CERTIFICATE OF CORRECTION
		:

The Request for Recalculation is **GRANTED** to the extent indicated.

The patent term adjustment has been determined to be **1077** days. The USPTO will *sua sponte* issue a certificate of correction reflecting the amount of PTA days determined by the recalculation.

Prior to the issuance of the certificate of correction, the USPTO will afford patentee an opportunity to be heard and request reconsideration. Accordingly, patentee has **one month or thirty (30) days**, whichever is longer, to file a request for reconsideration of this patent term adjustment calculation. See 35 U.S.C. 154(b)(3)(B)(ii) and 37 CFR 1.322(a)(4). No extensions of time will be granted under 37 CFR 1.136.

Patentee should use document code PET.OP if electronically filing a request for reconsideration of this patent term adjustment calculation. The patentee must also include the information required by 37 CFR 1.705(b)(2) and the fee required by 37 CFR 1.18(e). If patentee does not file a timely request for reconsideration of this patent term adjustment calculation including the information required by 37 CFR 1.705(b)(2) and the fee required by 37 CFR 1.18(e), the USPTO will issue a certificate of correction reflecting the PTA determination noted above.

Patentee should be aware that in order to preserve the right to review in the United States District Court for the District of Columbia of the USPTO patent term adjustment determination, patentee must ensure that he or she also take the steps required under 35 U.S.C. 154(b)(4)(A) in a timely manner. Nothing in the request for recalculation should be construed as providing an alternative time frame for commencing a civil action under 35 U.S.C. 154(b)(4)(A).

Any questions concerning this decision should be directed to the Office of Patent Legal Administration at 571-272-7702.

UNITED STATES PATENT AND TRADEMARK OFFICE

UNITED STATES DEPARTMENT OF COMMERCE
United States Patent and Trademark Office
Address: COMMISSIONER FOR PATENTS
P.O. Box 1450
Alexandria, Virginia 22313-1450
www.uspto.gov

HOLLINGSWORTH & FUNK
8500 Normandale Lake Blvd
SUITE 320
MINNEAPOLIS, MN 55437

Mail Date: 05/18/2010

Applicant	: Jeffrey E. Stahmann	: NOTICE CONCERNING IMPROPER
Patent Number	: 7575553	: CALCULATION OF PATENT TERM
Issue Date	: 08/18/2009	: ADJUSTMENT BASED UPON USPTO
Application No	: 10/930,508	: IMPROPERLY MEASURING REDUCTION
Filed	: 08/31/2004	: PERIOD UNDER 37 CFR 1.704(c)(10).

The United States Patent and Trademark Office (USPTO) discovered that in processing the recent recalculation decisions mailed in response to patentee's filed Request for Recalculation of Patent Term Adjustment in view of Wyeth, the USPTO improperly measured the reduction period for reductions under 37 CFR 1.704(c)(10). Pursuant to 37 CFR 1.704(c)(10), patentee's reduction begins on the date of filing the amendment under 37 CFR 1.312 ("1.312 amendment") or other related paper and ends on the date that the Office mails a response to the filing of the 1.312 amendment or other paper. It has been discovered that during the recalculation, the calculation failed to the limit the reduction to the mail date of the response to the 1.312 amendment or other paper. Accordingly, patentee's reductions were greater than warranted.

This notice **VACATES** the previous GRANTED request for recalculation and provides patentee with a revised GRANTED recalculation.

The patent term adjustment has been determined to be **1109** days. The USPTO will *sua sponte* issue a certificate of correction reflecting the amount of patent term adjustment (PTA) days determined by the recalculation.

Prior to the issuance of the certificate of correction, the USPTO will afford patentee an opportunity to be heard and request reconsideration. Accordingly, patentee has **one month or thirty (30) days** from the mail date of this notice, whichever is longer, to file a request for reconsideration of this PTA calculation. See 35 U.S.C. § 154(b)(3)(B)(ii) and 37 CFR 1.322(a)(4).

Patentee should use document code PET.OP if electronically filing a request for reconsideration of this PTA calculation. The patentee must also include the information required by 37 CFR 1.705(b)(2), and the fee required by 37 CFR 1.18(e). If patentee does not file a timely request for reconsideration of this PTA calculation, including the information required by 37 CFR 1.705(b)(2) and the fee required by 37 CFR 1.18(e), the USPTO will issue a certificate of correction reflecting the PTA determination noted above.

Patentee should be aware that in order to preserve the right of review of the USPTO's PTA determination in the United States District Court for the District of Columbia, patentee must ensure that the steps required under 35 U.S.C. § 154 (b)(4) are taken in a timely manner. Nothing in the request for recalculation should be construed as providing an alternative time frame for commencing a civil action under 35 U.S.C. § 154(b)(4).

UNITED STATES PATENT AND TRADEMARK OFFICE

Commissioner for Patents
United States Patent and Trademark Office
P.O. Box 1450
Alexandria, VA 22313-1450
www.uspto.gov

SCHWEGMAN, LUNDBERG, WOESSNER & KLUTH
1600 TCF TOWER
121 SOUTH EIGHT STREET
MINNEAPOLIS MN 55402

COPY MAILED

FEB 21 2006

OFFICE OF PETITIONS

In re Application of	:	
Leonard Forbes	:	
Application No. 10/930,514	:	ON PETITION
Filed: August 31, 2004	:	
Attorney Docket No. 1303.052US3	:	

This is a decision on the petition, filed February 17, 2006, under 37 CFR 1.313(c)(2) to withdraw the above-identified application from issue after payment of the issue fee.

The petition is **GRANTED**.

The above-identified application is withdrawn from issue for consideration of a submission under 37 CFR 1.114 (request for continued examination). See 37 CFR 1.313(c)(2).

Petitioner is advised that the issue fee paid on January 5, 2006, in the above-identified application cannot be refunded. If, however, the above-identified application is again allowed, petitioner may request that it be applied towards the issue fee required by the new Notice of Allowance.[1]

The file does not indicate a change of address has been submitted, although the address given on the petition differs from the address of record. If appropriate, a change of address should be filed in accordance with MPEP 601.03. A courtesy copy of this decision is being mailed to the address given on the petition; however, the Office will mail all future correspondence solely to the address of record.

Telephone inquiries should be directed to the undersigned at (571) 272-3208.

---

[1] The request to apply the issue fee to the new Notice may be satisfied by completing and returning the new Issue Fee Transmittal Form PTOL-85(b), which includes the following language thereon: "Commissioner for Patents is requested to apply the Issue Fee and Publication Fee (if any) or re-apply any previously paid issue fee to the application identified above." Petitioner is advised that, whether a fee is indicated as being due or not, the Issue Fee Transmittal Form **must** be completed and timely submitted to avoid abandonment. Note the language in bold text on the first page of the Notice of Allowance and Fee(s) Due (PTOL-85).

The examiner of Technology Center AU 2891 will consider the request for continued examination under 37 CFR 1.114.

Karen Creasy

Karen Creasy
Petitions Examiner
Office of Petitions
Office of the Deputy Commissioner
for Patent Examination Policy

cc:
SCHWEGMAN, LUNDBERG, WOESSNER & KLUTH
ATTN: EDWARD J. BROOKS III
P.O. BOX 2938
MINNEAPOLIS MN 55402

UNITED STATES PATENT AND TRADEMARK OFFICE

Commissioner for Patents
United States Patent and Trademark Office
P.O. Box 1450
Alexandria, VA 22313-1450
www.uspto.gov

MAILED

MAR 29 2010

OFFICE OF PETITIONS

FISH & RICHARDSON P.C.
P.O BOX 1022
MINNEAPOLIS MN 55440-1022

In re Patent No. 7,582,771	: DECISION ON REQUEST
Dehnhardt et al.	: FOR
Issue Date: September 1, 2009	: RECONSIDERATION OF
Application No. 10/930,534	: PATENT TERM ADJUSTMENT
Filed: August 31, 2004	: and
Atty Docket No. 16156-087001 /	: NOTICE OF INTENT TO ISSUE
AM101060	: CERTIFICATE OF CORRECTION

This is a decision on the reconsideration petition filed on November 2, 2009, which is being treated as a petition under 37 CFR 1.705(d) requesting that the patent term adjustment indicated on the above-identified patent be corrected to indicate that the term of the above-identified patent is extended or adjusted by one thousand two hundred eighty-six (1286) days.

The petition to correct the patent term adjustment indicated on the above-identified patent to indicate that the term of the above-identified patent is extended or adjusted by one thousand two hundred eighty-six (1286) days is **GRANTED**.

The Office acknowledges submission of the $200.00 fee set forth in 37 CFR 1.18(e). No additional fees are required.

The application is being forwarded to the Certificates of Correction Branch for issuance of a certificate of correction. The Office will issue a certificate of correction indicating that the term of the above-identified patent is extended or adjusted by **one thousand two hundred eighty-six (1286)** days.

Telephone inquiries specific to this matter should be directed to Senior Petitions Attorney Shirene Willis Brantley at (571) 272-3230.

Anthony Knight
Supervisor
Office of Petitions

Enclosure: Copy of DRAFT Certificate of Correction

UNITED STATES PATENT AND TRADEMARK OFFICE

CERTIFICATE OF CORRECTION

PATENT : 7,582,771 B2

DATED : **September 1, 2009** **DRAFT**

INVENTOR(S) : Dehnhardt et al.

It is certified that error appears in the above-identified patent and that said Letters Patent is hereby corrected as shown below:

On the cover page,

[*] Notice: Subject to any disclaimer, the term of this patent is extended or adjusted under 35 U.S.C. 154(b) by 617 days

Delete the phrase "by 617 days" and insert – by 1286 days--

UNITED STATES PATENT AND TRADEMARK OFFICE

Commissioner for Patents
United States Patent and Trademark Office
P.O. Box 1450
Alexandria, VA 22313-1450
www.uspto.gov

DR TARIG SAYED MUSTAFA ARBAB
SACCHARIDES SCIENCE AND TECHNILOGY LTD.
13 ARGYLE ROAD
NORTH FINCHLEY
LONDON, N12 8JA
UNITED KINGDOM

COPY MAILED

JUL 0 2 2008

OFFICE OF PETITIONS

In re Application of	:	
Arbab, Tarig Sayed Mustafa	:	
Application No. 10/930,538	:	ON PETITION
Filed: August 31, 2004	:	
Attorney Docket No. OSMA:1000RCE	:	

This is a decision on the petition under 37 C.F.R. § 1.137(b), filed June 13, 2008, to revive the above-identified application.

The petition is **DISMISSED**.

Any request for reconsideration must be submitted within TWO (2) MONTHS from the mail date of this decision. No further petition fee is required for the request. Extensions of time under 37 CFR 1.136(a) are permitted. The reconsideration request should include a cover letter entitled "Renewed Petition under 37 CFR 1.137(b)." This is **not** a final agency action within the meaning of 5 U.S.C. § 704.

This application became abandoned for failure to timely reply to the final Office action mailed November 15, 2007. No extensions of time under the provisions of 37 CFR 1.136(a) were obtained. Accordingly, this application became abandoned on February 16, 2008. A Notice of Abandonment was mailed May 22, 2008.

A grantable petition under 37 CFR 1.137(b) must be accompanied by:
(1) the required reply,[1]
(2) the petition fee,
(3) a statement that the entire delay in filing the required reply from the due date for the reply until the filing of a grantable petition pursuant to 37 CFR 1.137(b) was unintentional, and
(4) a terminal disclaimer and fee if the application was filed on or before June 8, 1995 or if the application is a design application.

Where there is a question as to whether either the abandonment or the delay in filing a petition under 37 CFR 1.137 was unintentional, the Commissioner may require additional information.[2]

---

[1] In a nonprovisional application abandoned for failure to prosecute, the required reply may be met by the filing of a continuing application. In an application or patent, abandoned or lapsed for failure to pay the issue fee or any portion thereof, the required reply must be the payment of the issue fee or any outstanding balance thereof.

The instant petition lacks item(s) (1). It is necessary under 37 CFR 1.137(b) to submit the required reply to the outstanding Office action. A proper reply to a final rejection under 37 CFR 1.113 may be: (1) an amendment, which places the application in condition for allowance; (2) a Notice of Appeal (with appeal fee); or (3) a Request for Continued Examination (RCE) in compliance with 37 CFR 1.114.

A copy of the Office action is enclosed per petitioner's request.

Further correspondence with respect to this matter should be addressed as follows:

By mail: Mail Stop PETITIONS
Commissioner for Patents
Post Office Box 1450
Alexandria, VA 22313-1450

By hand: Customer Window located at:
U.S. Patent and Trademark Office
Customer Service Window Randolph Building
401 Dulany Street
Alexandria, VA 22314

By fax: (571) 273-8300
ATTN: Office of Petitions

Any questions concerning this matter may be directed to the undersigned at (571) 272-3206.

Liana Walsh
Petitions Examiner
Office of Petitions

Enclosure: Office action (previously mailed November 15, 2007)

---

[2] See MPEP 711.03(c)(III)(C) and (D).

UNITED STATES PATENT AND TRADEMARK OFFICE

UNITED STATES DEPARTMENT OF COMMERCE
United States Patent and Trademark Office
Address: COMMISSIONER FOR PATENTS
P.O. Box 1450
Alexandria, Virginia 22313-1450
www.uspto.gov

APPLICATION NO.	FILING DATE	FIRST NAMED INVENTOR	ATTORNEY DOCKET NO.	CONFIRMATION NO.
10/930,538	08/31/2004	Tarig Sayed Mustafa Arbab	OSMA:1000	8863

34725 7590 11/15/2007
CHALKER FLORES, LLP
2711 LBJ FRWY
Suite 1036
DALLAS, TX 75234

EXAMINER
WOOD, AMANDA P

ART UNIT	PAPER NUMBER
1657	

MAIL DATE	DELIVERY MODE
11/15/2007	PAPER

Please find below and/or attached an Office communication concerning this application or proceeding.

The time period for reply, if any, is set in the attached communication.

Office Action Summary	Application No.	Applicant(s)	
	10/930,538	ARBAB, TARIG SAYED MUSTAFA	
	Examiner	Art Unit	
	Amanda P. Wood	1657	

-- The MAILING DATE of this communication appears on the cover sheet with the correspondence address --

Period for Reply

A SHORTENED STATUTORY PERIOD FOR REPLY IS SET TO EXPIRE 3 MONTH(S) OR THIRTY (30) DAYS, WHICHEVER IS LONGER, FROM THE MAILING DATE OF THIS COMMUNICATION.

- Extensions of time may be available under the provisions of 37 CFR 1.136(a). In no event, however, may a reply be timely filed after SIX (6) MONTHS from the mailing date of this communication.
- If NO period for reply is specified above, the maximum statutory period will apply and will expire SIX (6) MONTHS from the mailing date of this communication.
- Failure to reply within the set or extended period for reply will, by statute, cause the application to become ABANDONED (35 U.S.C. § 133). Any reply received by the Office later than three months after the mailing date of this communication, even if timely filed, may reduce any earned patent term adjustment. See 37 CFR 1.704(b).

Status

1)☒ Responsive to communication(s) filed on 05 July 2007.

2a)☒ This action is **FINAL**. 2b)☐ This action is non-final.

3)☐ Since this application is in condition for allowance except for formal matters, prosecution as to the merits is closed in accordance with the practice under *Ex parte Quayle*, 1935 C.D. 11, 453 O.G. 213.

Disposition of Claims

4)☒ Claim(s) 23-30 is/are pending in the application.

4a) Of the above claim(s) _____ is/are withdrawn from consideration.

5)☐ Claim(s) _____ is/are allowed.

6)☒ Claim(s) 23-30 is/are rejected.

7)☐ Claim(s) _____ is/are objected to.

8)☐ Claim(s) _____ are subject to restriction and/or election requirement.

Application Papers

9)☐ The specification is objected to by the Examiner.

10)☐ The drawing(s) filed on _____ is/are: a)☐ accepted or b)☐ objected to by the Examiner.

Applicant may not request that any objection to the drawing(s) be held in abeyance. See 37 CFR 1.85(a).

Replacement drawing sheet(s) including the correction is required if the drawing(s) is objected to. See 37 CFR 1.121(d).

11)☐ The oath or declaration is objected to by the Examiner. Note the attached Office Action or form PTO-152.

Priority under 35 U.S.C. § 119

12)☐ Acknowledgment is made of a claim for foreign priority under 35 U.S.C. § 119(a)-(d) or (f).

a)☐ All b)☐ Some * c)☐ None of:

1.☐ Certified copies of the priority documents have been received.

2.☐ Certified copies of the priority documents have been received in Application No. _____.

3.☐ Copies of the certified copies of the priority documents have been received in this National Stage application from the International Bureau (PCT Rule 17.2(a)).

* See the attached detailed Office action for a list of the certified copies not received.

Attachment(s)

1) ☐ Notice of References Cited (PTO-892)
2) ☐ Notice of Draftsperson's Patent Drawing Review (PTO-948)
3) ☐ Information Disclosure Statement(s) (PTO/SB/08) Paper No(s)/Mail Date _____.
4) ☐ Interview Summary (PTO-413) Paper No(s)/Mail Date. _____ .
5) ☐ Notice of Informal Patent Application
6) ☐ Other: _____.

DETAILED ACTION

Applicant's response and amendments filed 5 July 2007 have been received and entered.

Claims 23-30 have been examined on the merits.

Claim Rejections - 35 USC § 112

The following is a quotation of the first paragraph of 35 U.S.C. 112:

> The specification shall contain a written description of the invention, and of the manner and process of making and using it, in such full, clear, concise, and exact terms as to enable any person skilled in the art to which it pertains, or with which it is most nearly connected, to make and use the same and shall set forth the best mode contemplated by the inventor of carrying out his invention.

Claims 23-30 stand rejected under 35 U.S.C. 112, first paragraph, as failing to comply with the written description requirement. The claim(s) contains subject matter which was not described in the specification in such a way as to reasonably convey to one skilled in the relevant art that the inventor(s), at the time the application was filed, had possession of the claimed invention. Claim 23 contains the phrase "sufficient to treat diabetes" in line 3. There is insufficient support for this phrase in the instant specification. Accordingly, this phrase is deemed new matter.

Claims 25 and 28 stand rejected under 35 U.S.C. 112, first paragraph, as failing to comply with the enablement requirement. The claim(s) contains subject matter which was not described in the specification in such a way as to enable one skilled in the art to which it pertains, or with which it is most nearly connected, to make and/or use the invention. In particular, Applicant has demonstrated only one formulation comprising

amylases adapted for intravenous administration. Applicant has not enabled one of skill in the art to formulate an enzyme in a dosage form comprising one or more hexokinases or one or more oxidases capable of treating diabetes by converting in vivo polysaccharides into disaccharides and/or monosaccharides adapted for in vivo administration because Applicant has not demonstrated what, if any, hexokinases or oxidases are capable of treating diabetes by converting in vivo polysaccharides into disaccharides and/or monosaccharides. Therefore, Applicant is not enabled for the full scope of the instant claims based upon the lack of guidance provided in the instant specification.

Response to Arguments

Applicant's arguments filed 5 July 2007 have been fully considered but they are not persuasive. In particular, Applicant argues that the instant Application provides support for the phrase "sufficient to treat diabetes" is found throughout the specification, and that its use does not constitute new matter. The Examiner respectfully disagrees with Applicant's argument regarding this rejection. Applicant has not specifically pointed out where in the specification there is support for the phrase "sufficient to treat diabetes."

Applicant argues that claims 25 and 28 fully comply with the enablement requirement because the present specification provided considerable direction and guidance on how to practice the claimed invention, and provided working examples, as well as disclosed a pharmaceutical formulation including one or more hexokinases, one or more oxidases, one or more amylases, or combination thereof, and that the fine-

tuning of therapeutic formulations is a standard practice in the field of pharmacology, not considered undue or unreasonable. The Examiner respectfully disagrees with Applicant's arguments regarding this rejection. In particular, the basis for the rejection was that the claims were not enabled for all hexokinases and/or all oxidases because Applicant did not provide any guidance in the specification as to what, if any, particular hexokinases and/or oxidases would work in the instant invention. The Applicant only provided examples with amylase, and is therefore enabled for amylase, but a lack of any guidance as to what hexokinases or oxidases to use in the inventive composition prevents Applicant from having enablement for those enzymes. The vast number of enzymes in these classes (e.g., a search of BRENDA indicates 659 different hits for oxidases) indicates that it would require undue experimentation for one of skill in the art to find the particular hexokinases and oxidases Applicant intended to encompass by the instant claims.

New Rejections under 112, 1st Paragraph

In addition, claim 26 is rejected under 35 U.S.C. 112, first paragraph, as failing to comply with the written description requirement. The claim(s) contains subject matter which was not described in the specification in such a way as to reasonably convey to one skilled in the relevant art that the inventor(s), at the time the application was filed, had possession of the claimed invention. Claim 26, lines 1-2, contains the phrase "an enzymatic composition in a dosage form for effectively decreasing polysaccharides in a subject having diabetes" and in line 7 contains the phrase "suspected of having the polysaccharide based disease." There is insufficient support in the instant specification

for an enzymatic composition in a dosage form for effectively decreasing polysaccharides in a subject wherein the subject is described as "having diabetes" or "suspected of having the polysaccharide based disease." Accordingly, this phrase is deemed new matter.

The following is a quotation of the second paragraph of 35 U.S.C. 112:

> The specification shall conclude with one or more claims particularly pointing out and distinctly claiming the subject matter which the applicant regards as his invention.

Claims 23-25 are rejected under 35 U.S.C. 112, second paragraph, as being indefinite for failing to particularly point out and distinctly claim the subject matter which applicant regards as the invention. In lines 5-6 of claim 23, Applicant recites the phrase "wherein a level of polysaccharides is measured from a sample from the subject." It is unclear what type of sample is taken from the subject, and from where (i.e., is it a blood sample and is simply a finger prick, or does it require a vial of venous blood, does it require plasma, is it a urine sample, saliva sample, or some other type of sample, etc?). Furthermore, it is unclear how the sample is measured for a level of polysaccharides (i.e., a dipstick test, ELISA, reflectance reading, etc.?).

In line 2 of claim 25, Applicant recites the phrase "enzymes are one or more hexokinases, one or more oxidases." It is unclear what particular hexokinases and/or oxidases Applicant means by this phrase (i.e., Applicant has not shown what hexokinases and/or oxidases can be used to convert in vivo polysaccharides into disaccharides and/or monosaccharides).

Claims 26-30 are rejected under 35 U.S.C. 112, second paragraph, as being indefinite for failing to particularly point out and distinctly claim the subject matter which applicant regards as the invention. In lines 5-6 of claim 26, Applicant recites the phrase "wherein a level of polysaccharides is measured from a sample from the subject." It is unclear what type of sample is taken from the subject, and from where (i.e., is it a blood sample and is simply a finger prick, or does it require a vial of venous blood, does it require plasma, is it a urine sample, saliva sample, or some other type of sample, etc?). Furthermore, it is unclear how the sample is measured for a level of polysaccharides (i.e., a dipstick test, ELISA, reflectance reading, etc.?).

In line 2 of claim 28, Applicant recites the phrase "enzymes are one or more hexokinases, one or more oxidases." It is unclear what particular hexokinases and/or oxidases Applicant means by this phrase (i.e., Applicant has not shown what hexokinases and/or oxidases can be used to convert in vivo polysaccharides into disaccharides and/or monosaccharides).

All other claims depend directly or indirectly from rejected claims and are, therefore, also rejected under USC 112, second paragraph for the reasons set forth above.

Response to Arguments

Applicant's arguments filed 5 July 2007 have been fully considered but they are not persuasive. Applicant argues that the specification clearly states particular types of samples that may used from the subject in paragraph [007]. The Examiner respectfully disagrees with Applicant's arguments regarding this rejection because the indefinite

nature of the claim as drafted allows for the interpretation of the phrase as a sample being one other than a biological sample, as Applicant seems to intend to claim, based upon the specification. Although the claims are interpreted in light of the specification, limitations from the specification are not read into the claims. See *In re Van Geuns*, 988 F.2d 1181, 26 USPQ2d 1057 (Fed. Cir. 1993).

Applicant argues that the application clearly apprises those skilled in the art that hexokinases and oxidases are capable of treating diabetes by converting in vivo polysaccharides into disaccharides and/or monosaccharides. Applicant's argument does not address the rejection's central issue, which is that it is unclear what particular hexokinases and/or oxidases are, in fact, capable of doing what the Applicant claims.

New Rejections Under 112, 2nd Paragraph

Claim 26 is rejected under 35 U.S.C. 112, second paragraph, as being indefinite for failing to particularly point out and distinctly claim the subject matter which applicant regards as the invention. Claim 26 recites the phrase "the polysaccharide based disease" in line 7. It is unclear what Applicant means by "polysaccharide based disease" and how it relates to diabetes because Applicant has not clearly defined in the instant specification that diabetes is, in fact, a polysaccharide based disease. Applicant alludes to a correlation of the presence of starch in undefined samples from a patient with insulin resistance in the patient, but Applicant fails to clearly define "polysaccharide based disease" as encompassing diabetes. The American Diabetes Association defines diabetes (Type II) as the body either not producing enough insulin, or the cells

ignoring insulin that is produced, and therefore cells cannot use sugar that is in the blood, and glucose builds up in the blood instead of going into the cells. Glucose is a monosaccharide, and therefore, is not considered a polysaccharide. Section 2173.05(a) part III addresses the use of terminology inconsistent with the ordinary meanings in the art. "Consistent with the well-established axiom in patent law that a patentee or applicant is free to be his or her own lexicographer, a patentee or applicant may use terms in a manner contrary to or inconsistent with one or more of their ordinary meanings if the written description clearly redefines the terms. See, e.g., Process Control Corp. v. HydReclaim Corp., 190 F.3d 1350, 1357, 52 USPQ2d 1029, 1033 (Fed. Cir. 1999)."

Claim 26 recites the limitation "the subject suspected of having" in lines 6-7. There is insufficient antecedent basis for this limitation in the claim.

Claim 26 recites the limitation "the polysaccharide based disease" in line 7. There is insufficient antecedent basis for this limitation in the claim.

Claim Rejections - 35 USC § 102

The following is a quotation of the appropriate paragraphs of 35 U.S.C. 102 that form the basis for the rejections under this section made in this Office action:

> A person shall be entitled to a patent unless –
>
> (b) the invention was patented or described in a printed publication in this or a foreign country or in public use or on sale in this country, more than one year prior to the date of application for patent in the United States.

Claims 23-30 stand rejected under 35 U.S.C. 102(b) as being anticipated by Segall et al (US 5,698,536).

An enzymatic composition in a dosage form for effectively decreasing polysaccharide levels in a subject is claimed.

Segall et al beneficially teach a solution comprising amylase for intravenous administration (i.e., parenteral) capable of digesting starch (i.e., polysaccharides) in vivo. In addition, Segall beneficially teach monitoring (i.e., measuring) the level of polysaccharides in the patient after administration of the amylase (see, for example, col. 7, lines 5-10, col. 16, lines 30-65, and col. 20, lines 10-23).

Therefore, the reference is deemed to anticipate the instant claim above.

Response to Arguments

Applicant's arguments filed 5 July 2007 have been fully considered but they are not persuasive. In response to applicant's argument that Segall et al does not teach a composition for removal of polysaccharides by administration of amylase, a recitation of the intended use of the claimed invention must result in a structural difference between the claimed invention and the prior art in order to patentably distinguish the claimed invention from the prior art. If the prior art structure is capable of performing the intended use, then it meets the claim. In particular, Segall et al teach a composition containing amylase specifically for digesting starch that is administered to patients intravenously. Based upon the broadest reasonable interpretation of the claims, as drafted, Segall et al do teach the claimed enzymatic composition which effectively decreases polysaccharide levels in a subject.

Applicant further argues that one could not practice the present invention without the teachings of the present disclosure. The Examiner respectfully disagrees with Applicant's arguments. In response to applicant's arguments that Segall et al does not add any guidance as to the need for treatment of diabetic patients, enzymatic treatment of non-chemically modified polysaccharides, and application of an enzymatic composition in concert with determination of in vivo polysaccharides, a recitation of the intended use of the claimed invention must result in a structural difference between the claimed invention and the prior art in order to patentably distinguish the claimed invention from the prior art. If the prior art structure is capable of performing the intended use, then it meets the claim. In particular, the amylase of Segall et al is capable of digesting polysaccharides as claimed by Applicant, although Applicant attempts to argue this point by stating that Segall et al applies the amylase to chemically modified starch, and that the enzymatic composition of the present invention would not work to hydrolyze the polysaccharides of Segall et al. Applicant's argument is beside the point, because the issue at stake is that the amylase of Segall et al is the same as the amylase of the present application, both of which will digest polysaccharides as required by the present application.

In response to applicant's argument that the references fail to show certain features of applicant's invention, it is noted that the features upon which applicant relies (i.e., that the present invention teaches the detrimental consequences of in vivo polysaccharides and the beneficial effect of their removal) are not recited in the rejected claim(s). Although the claims are interpreted in light of the specification, limitations from

the specification are not read into the claims. See *In re Van Geuns*, 988 F.2d 1181, 26 USPQ2d 1057 (Fed. Cir. 1993).

Claim Rejections - 35 USC § 103

The following is a quotation of 35 U.S.C. 103(a) which forms the basis for all obviousness rejections set forth in this Office action:

> (a) A patent may not be obtained though the invention is not identically disclosed or described as set forth in section 102 of this title, if the differences between the subject matter sought to be patented and the invention was made to a person having ordinary skill in the art to which said subject matter pertains. Patentability shall not be negatived by the manner in which the invention was made.

Claims 23-30 stand rejected under 35 U.S.C. 103(a) as being unpatentable over Segall et al (US 5,698,536).

An enzymatic composition in a dosage form for effectively decreasing polysaccharide levels in a subject is claimed.

Segall et al beneficially teach a solution comprising amylase for intravenous administration (i.e., parenteral) capable of digesting starch (i.e., polysaccharides) in vivo. In addition, Segall beneficially teach monitoring (i.e., measuring) the level of polysaccharides in the patient after administration of the amylase (see, for example, col. 7, lines 5-10, col. 16, lines 30-65, and col. 20, lines 10-23).

It would have been obvious to one of ordinary skill in the art at the time the claimed invention was made to provide the composition disclosed by Segall et al based upon the knowledge available to one of ordinary skill in the art at the time the claimed invention was made by using it in subjects in need of decreased in vivo polysaccharide levels. In particular, one of ordinary skill in the art would have been motivated to use an

enzyme composition comprising amylase, such as that taught by Segall et al, in any patient with high starch (i.e., polysaccharide) levels in vivo, so as to reduce the level of said polysaccharides in the patient, based upon the general knowledge that amylase digests polysaccharides. Furthermore, the cited reference particularly points out that the enzyme amylase is a starch digesting enzyme capable of being administered intravenously to a subject and that the levels of starch or polysaccharide in the subject can then be monitored, and therefore, it would have been both obvious and beneficial for the skilled artisan to use the composition taught by Segall et al to decrease polysaccharide levels in other subjects by the same method. The result-effective adjustment of particular conventional working conditions (e.g., using a particular enzyme to convert in vivo polysacchrides into disaccharides and/or monosaccharides) is deemed merely a matter of judicious selection and routine optimization which is well within the purview of the skilled artisan.

From the teachings of the references, it is apparent that one of ordinary skill in the art would have had a reasonable expectation of success in producing the claimed invention. Therefore, the invention as a whole, was *prima facie* obvious to one of ordinary skill in the art at the time the claimed invention was made, as evidenced by the cited references, especially in the absence of evidence to the contrary.

Response to Arguments

Applicant's arguments filed 5 July 2007 have been fully considered but they are not persuasive. In response to applicant's argument that Segall et al does not teach a

composition for removal of polysaccharides by administration of amylase, a recitation of the intended use of the claimed invention must result in a structural difference between the claimed invention and the prior art in order to patentably distinguish the claimed invention from the prior art. If the prior art structure is capable of performing the intended use, then it meets the claim. In particular, Segall et al teach a composition containing amylase specifically for digesting starch that is administered to patients intravenously. Based upon the broadest reasonable interpretation of the claims, as drafted, Segall et al do teach the claimed enzymatic composition which effectively decreases polysaccharide levels in a subject.

Applicant further argues that one could not practice the present invention without the teachings of the present disclosure. The Examiner respectfully disagrees with Applicant's arguments. In response to applicant's arguments that Segall et al does not add any guidance as to the need for treatment of diabetic patients, enzymatic treatment of non-chemically modified polysaccharides, and application of an enzymatic composition in concert with determination of in vivo polysaccharides, a recitation of the intended use of the claimed invention must result in a structural difference between the claimed invention and the prior art in order to patentably distinguish the claimed invention from the prior art. If the prior art structure is capable of performing the intended use, then it meets the claim. In particular, the amylase of Segall et al is capable of digesting polysaccharides as claimed by Applicant, although Applicant attempts to argue this point by stating that Segall et al applies the amylase to chemically modified starch, and that the enzymatic composition of the present invention would not

work to hydrolyze the polysaccharides of Segall et al. Applicant's argument is beside the point, because the issue at stake is that the amylase of Segall et al is the same as the amylase of the present application, both of which will digest polysaccharides as required by the present application.

In response to applicant's argument that the references fail to show certain features of applicant's invention, it is noted that the features upon which applicant relies (i.e., that the present invention teaches a correlation between in vivo polysaccharides and diabetes) are not recited in the rejected claim(s). Although the claims are interpreted in light of the specification, limitations from the specification are not read into the claims. See *In re Van Geuns*, 988 F.2d 1181, 26 USPQ2d 1057 (Fed. Cir. 1993). Furthermore, Applicant fails to disclose in the instant specification a correlation between in vivo polysaccharides and diabetes.

Conclusion

No claims are allowed.

Applicant's amendment necessitated the new ground(s) of rejection presented in this Office action. Accordingly, **THIS ACTION IS MADE FINAL**. See MPEP § 706.07(a). Applicant is reminded of the extension of time policy as set forth in 37 CFR 1.136(a).

A shortened statutory period for reply to this final action is set to expire THREE MONTHS from the mailing date of this action. In the event a first reply is filed within TWO MONTHS of the mailing date of this final action and the advisory action is not mailed until after the end of the THREE-MONTH shortened statutory period, then the

shortened statutory period will expire on the date the advisory action is mailed, and any extension fee pursuant to 37 CFR 1.136(a) will be calculated from the mailing date of the advisory action. In no event, however, will the statutory period for reply expire later than SIX MONTHS from the date of this final action.

Any inquiry concerning this communication or earlier communications from the examiner should be directed to Amanda P. Wood whose telephone number is (571) 272-8141. The examiner can normally be reached on M-F 8:30AM -5PM.

If attempts to reach the examiner by telephone are unsuccessful, the examiner's supervisor, Jon Weber can be reached on (571) 272-0925. The fax phone number for the organization where this application or proceeding is assigned is 571-273-8300.

Information regarding the status of an application may be obtained from the Patent Application Information Retrieval (PAIR) system. Status information for published applications may be obtained from either Private PAIR or Public PAIR. Status information for unpublished applications is available through Private PAIR only. For more information about the PAIR system, see http://pair-direct.uspto.gov. Should you have questions on access to the Private PAIR system, contact the Electronic Business Center (EBC) at 866-217-9197 (toll-free). If you would like assistance from a USPTO Customer Service Representative or access to the automated information system, call 800-786-9199 (IN USA OR CANADA) or 571-272-1000.

APW
Examiner
Art Unit 1657

/Robert B. Mondesi/
Primary Examiner
Group 1652

UNITED STATES PATENT AND TRADEMARK OFFICE

Commissioner for Patents
United States Patent and Trademark Office
P.O. Box 1450
Alexandria, VA 22313-1450
www.uspto.gov

DR TARIG SAYED MUSTAFA ARBAB
SACCHARIDES SCIENCE AND TECHNOLOGY LTD.
13 ARGYLE ROAD
NORTH FINCHLEY
LONDON, N12 8JA
UNITED KINGDOM

COPY MAILED

AUG 25 2008

OFFICE OF PETITIONS

In re Application of	:	
Arbab, Tarig Sayed Mustafa	:	
Application No. 10/930,538	:	ON PETITION
Filed: August 31, 2004	:	
Attorney Docket No. OSMA:1000RCE	:	

This is a decision on the petition under 37 C.F.R. § 1.137(b), filed June 17, 2008 and July 1, 2008, to revive the above-identified application.

The petition is **GRANTED**.

The petition satisfies the requirements of 37 CFR 1.137(b) in that petitioner has supplied (1) the reply in the form of a Request for Continued Examination (RCE) and an Amendment, (2) the petition fee, and (3) a proper statement of unintentional delay.

Telephone inquiries concerning this decision should be directed to the undersigned at (571) 272-3206.

This matter is being referred to Technology Center 1657 for processing of the Request for Continued Examination under 37 CFR 1.114 filed with the instant petition.

Liana Walsh
Petitions Examiner
Office of Petitions

UNITED STATES PATENT AND TRADEMARK OFFICE

UNITED STATES DEPARTMENT OF COMMERCE
United States Patent and Trademark Office
Address: COMMISSIONER FOR PATENTS
P.O. Box 1450
Alexandria, Virginia 22313-1450
www.uspto.gov

DORSEY & WHITNEY LLP
INTELLECTUAL PROPERTY DEPARTMENT
Columbia Center
701 Fifth Avenue, Suite 6100
SEATTLE, WA 98104-7043

Mail Date: 04/21/2010

Applicant	: Brent Keeth	: DECISION ON REQUEST FOR
Patent Number	: 7577212	: RECALCULATION of PATENT
Issue Date	: 08/18/2009	: TERM ADJUSTMENT IN VIEW
Appliction No	: 10/930,543	: OF WYETH AND NOTICE OF INTENT TO
Filed	: 08/30/2004	: ISSUE CERTIFICATE OF CORRECTION
		:

The Request for Recalculation is **GRANTED** to the extent indicated.

The patent term adjustment has been determined to be **1388** days. The USPTO will *sua sponte* issue a certificate of correction reflecting the amount of PTA days determined by the recalculation.

Prior to the issuance of the certificate of correction, the USPTO will afford patentee an opportunity to be heard and request reconsideration. Accordingly, patentee has **one month or thirty (30) days**, whichever is longer, to file a request for reconsideration of this patent term adjustment calculation. See 35 U.S.C. 154(b)(3)(B)(ii) and 37 CFR 1.322(a)(4). No extensions of time will be granted under 37 CFR 1.136.

Patentee should use document code PET.OP if electronically filing a request for reconsideration of this patent term adjustment calculation. The patentee must also include the information required by 37 CFR 1.705(b)(2) and the fee required by 37 CFR 1.18(e). If patentee does not file a timely request for reconsideration of this patent term adjustment calculation including the information required by 37 CFR 1.705(b)(2) and the fee required by 37 CFR 1.18(e), the USPTO will issue a certificate of correction reflecting the PTA determination noted above.

Patentee should be aware that in order to preserve the right to review in the United States District Court for the District of Columbia of the USPTO patent term adjustment determination, patentee must ensure that he or she also take the steps required under 35 U.S.C. 154(b)(4)(A) in a timely manner. Nothing in the request for recalculation should be construed as providing an alternative time frame for commencing a civil action under 35 U.S.C. 154(b)(4)(A).

Any questions concerning this decision should be directed to the Office of Patent Legal Administration at 571-272-7702.

UNITED STATES PATENT AND TRADEMARK OFFICE

UNITED STATES DEPARTMENT OF COMMERCE
United States Patent and Trademark Office
Address: COMMISSIONER FOR PATENTS
P.O. Box 1450
Alexandria, Virginia 22313-1450
www.uspto.gov

APPL NO.	FILING OR 371 (c) DATE	ART UNIT	FIL FEE REC'D	ATTY.DOCKET NO	DRAWINGS	TOT CLMS	IND CLMS
10/930,544	08/30/2004	2836	900	4-2-12	1	7	1

CONFIRMATION NO. 7741

UPDATED FILING RECEIPT

OC000000014711366

Mr. Bruce S. Schneider
1153 Long Hill Road
Stirling, NJ 07980-1007

Date Mailed: 12/09/2004

Receipt is acknowledged of this regular Patent Application. It will be considered in its order and you will be notified as to the results of the examination. Be sure to provide the U.S. APPLICATION NUMBER, FILING DATE, NAME OF APPLICANT, and TITLE OF INVENTION when inquiring about this application. Fees transmitted by check or draft are subject to collection. Please verify the accuracy of the data presented on this receipt. **If an error is noted on this Filing Receipt, please write to the Office of Initial Patent Examination's Filing Receipt Corrections, facsimile number 703-746-9195. Please provide a copy of this Filing Receipt with the changes noted thereon. If you received a "Notice to File Missing Parts" for this application, please submit any corrections to this Filing Receipt with your reply to the Notice. When the USPTO processes the reply to the Notice, the USPTO will generate another Filing Receipt incorporating the requested corrections (if appropriate).**

Applicant(s)

Muhammad Ashraful Alam, West Lafayette, IN;
Philip W. Mason, Allentown, PA;
Robert Kent Smith, New Providence, NJ;

Power of Attorney:

David Smith–30592
Scott McLellan–30776
Ferdinand Romano–32752
Anthony Grillo–36535
Mark Kurisko–38944
John Veschi–39058
Geraldine Monteleone–40097

Domestic Priority data as claimed by applicant

This appln claims benefit of 60/524,341 11/21/2003

Foreign Applications

If Required, Foreign Filing License Granted: 10/30/2004

The country code and number of your priority application, to be used for filing abroad under the Paris Convention, is US10/930,544

Projected Publication Date: 05/26/2005

Non-Publication Request: No

Early Publication Request: No

Title

Predictive applications for devices with thin dielectric regions

Preliminary Class

361

LICENSE FOR FOREIGN FILING UNDER
Title 35, United States Code, Section 184
Title 37, Code of Federal Regulations, 5.11 & 5.15

GRANTED

The applicant has been granted a license under 35 U.S.C. 184, if the phrase "IF REQUIRED, FOREIGN FILING LICENSE GRANTED" followed by a date appears on this form. Such licenses are issued in all applications where the conditions for issuance of a license have been met, regardless of whether or not a license may be required as set forth in 37 CFR 5.15. The scope and limitations of this license are set forth in 37 CFR 5.15(a) unless an earlier license has been issued under 37 CFR 5.15(b). The license is subject to revocation upon written notification. The date indicated is the effective date of the license, unless an earlier license of similar scope has been granted under 37 CFR 5.13 or 5.14.

This license is to be retained by the licensee and may be used at any time on or after the effective date thereof unless it is revoked. This license is automatically transferred to any related applications(s) filed under 37 CFR 1.53(d). This license is not retroactive.

The grant of a license does not in any way lessen the responsibility of a licensee for the security of the subject matter as imposed by any Government contract or the provisions of existing laws relating to espionage and the national security or the export of technical data. Licensees should apprise themselves of current regulations especially with respect to certain countries, of other agencies, particularly the Office of Defense Trade Controls, Department of State (with respect to Arms, Munitions and Implements of War (22 CFR 121-128)); the Office of Export Administration, Department of Commerce (15 CFR 370.10 (j)); the Office of Foreign Assets Control, Department of Treasury (31 CFR Parts 500+) and the Department of Energy.

NOT GRANTED

No license under 35 U.S.C. 184 has been granted at this time, if the phrase "IF REQUIRED, FOREIGN FILING LICENSE GRANTED" DOES NOT appear on this form. Applicant may still petition for a license under 37 CFR 5.12, if a license is desired before the expiration of 6 months from the filing date of the application. If 6 months has lapsed from the filing date of this application and the licensee has not received any indication of a secrecy order under 35 U.S.C. 181, the licensee may foreign file the application pursuant to 37 CFR 5.15(b).

UNITED STATES PATENT AND TRADEMARK OFFICE

Commissioner for Patents
United States Patent and Trademark Office
P.O. Box 1450
Alexandria, VA 22313-1450
www.uspto.gov

RANBAXY INC.
INTELLECTUAL PROPERTY DEPT.
600 COLLEGE ROAD EAST
SUITE 2100
PRINCETON NJ 08540

MAILED

AUG 13 2009

OFFICE OF PETITIONS

In re Application of
Venkata P. PALLE et al.
Application No. 10/930,569
Filed: August 30, 2004
Attorney Docket No. **RLL-361US**

DECISION ON PETITION

This is a decision on the petition under the unintentional provisions of 37 CFR 1.137(b), filed May 12, 2009, to revive the above-identified application.

The petition is **GRANTED**.

The application became abandoned for failure to reply in a timely manner to the non-final Office action mailed, October 08, 2008, which set a shortened statutory period for reply of three (3) months. A request for a five (5) - month extension of time under the provisions of 37 CFR 1.136(a) was received on April 09, 2009. However, that was after the expiration of the period of reply (including a total extension of time of 3 months) which expired on April 08, 2009. Accordingly, the application became abandoned on January 09, 2009.

The petition satisfies the requirements of 37 CFR 1.137(b) in that petitioner has supplied (1) the reply in the form of an amendment, (2) the petition fee of $1620, and (3) a proper statement of unintentional delay. Accordingly, the reply to the non-final Office action of October 08, 2008 is accepted as having been unintentionally delayed.

An extension of time under 37 CFR 1.136 must be filed prior to the expiration of the maximum extendable period for reply. See In re Application of S., 8 USPQ2d 1630, 1631 (Comm'r Pats. 1988). Since the $2350 extension of time fee submitted on April 09, 2009 was subsequent to the maximum extendable period for reply, petitioner may request a refund of this fee by writing to the following address: Mail Stop 16, Commissioner for Patents, P. O. Box 1450, Alexandria, VA 22313-1450. A copy of this decision should accompany petitioner's request.

Telephone inquiries concerning this decision should be directed to Tredelle Jackson at (571) 272-2783.

This application is being referred to Technology Center AU 1626 for appropriate action on the concurrently filed amendment.

Ramesh Krishnamurthy
Petitions Examiner
Office of Petitions

UNITED STATES PATENT AND TRADEMARK OFFICE

Commissioner for Patents
United States Patent and Trademark Office
P.O. Box 1450
Alexandria, VA 22313-1450
www.uspto.gov

COPY MAILED

MAY 24 2005

OFFICE OF PETITIONS

BARNES & THORNBURG
P.O. BOX 2786
CHICAGO IL 60690-2786

In re Application of
Mark J. Denne et al
Application No. 10/930,592
Filed: August 31, 2004
Attorney Docket No. 37383-96731

: DECISION GRANTING PETITION

This is a decision on the petition filed November 22, 2004, which is being treated as a petition under 37 CFR 1.53, to accept page 33 of the specification as having been present on filing of the above-identified application.

The petition is **granted**.

The application was deposited on August 31, 2004. However, on October 26, 2004, the Office of Initial Patent Examination Division mailed a "Notice of Omitted Items," stating that page 33 of the specification was omitted from the application on filing.

In response, on November 22, 2004, the instant petition and a copy of page 33 of the specification were submitted. The papers were accompanied by a copy of applicant's postcard receipt that acknowledges receipt of 37 pages of the specification on August 31, 2004. A review of the application file indicates the presence of only 36 pages of the specification, with page 37 as the abstract and page 33 missing.

MPEP 503 states that "A postcard receipt which itemizes and properly identifies the papers which are being filed serves as prima facie evidence of receipt in the PTO of all the items listed thereon on the date stamped thereon by the PTO." Accordingly, since the evidence supports the fact that page 33 of the specification was in fact present on filing, the Notice mailed October 26, 2004 is vacated.

Since page 33 of the specification cannot be located in the Office, the copy of page 33 supplied on November 22, 2004, will be used for processing and examination purposes.

This application is being forwarded to the Office of Initial Patent Examination Division for processing with a filing date of **August 31, 2004**, and for using the copy of page 33 of the specification supplied on November 22, 2004, and an indication that page 33 of the specification was present on filing; and for mailing of a corrected filing receipt.

Telephone inquiries concerning this matter may be directed to Karen Creasy at (571) 272-3208.

for D Wood
Brian Hearn
Senior Petitions Examiner
Office of Petitions
Office of the Deputy Commissioner
for Patent Examination Policy

UNITED STATES PATENT AND TRADEMARK OFFICE

Commissioner for Patents
United States Patent and Trademark Office
P.O. Box 1450
Alexandria, VA 22313-1450
www.uspto.gov

BARNES & THORNBURG LLP
P.O. BOX 2786
CHICAGO IL 60690-2786

MAILED

SEP 14 2009

OFFICE OF PETITIONS

In re Application of :
DENNE, Mark J. et al. :
Application No. 10/930,592 : DECISION ON PETITION
Filed: August 31, 2004 : TO WITHDRAW
Attorney Docket No. **37383-97407** : FROM RECORD

This is a decision on the Request to Withdraw as attorney or agent under 37 C.F.R. § 1.36(b) or 37 C.F.R. § 10.40 filed August 04, 2009.

The request is **NOT APPROVED**.

A review of the file record indicates that Michael Geoffrey does not have power of attorney in this patent application nor is there any statement or evidence of record of employment in or otherwise being engaged in the proceedings in this patent application. Accordingly, the request to withdraw under 37 C.F.R. § 1.36(b) is not applicable.

All future communications from the Office will continue to be directed to the above-listed address until otherwise properly notified by the applicant.

Telephone inquires concerning this decision should be directed to Tredelle Jackson at 571-272-2783.

Tredelle D. Jackson
Paralegal Specialist
Office of Petitions

cc: **JANE HUANG**
111 BRASSIE AVENUE
FLOSSMOOR IL 60422

UNITED STATES PATENT AND TRADEMARK OFFICE

Commissioner for Patents
United States Patent and Trademark Office
P.O. Box 1450
Alexandria, VA 22313-1450
www.uspto.gov

BARNES & THORNBURG LLP
P.O. BOX 2786
CHICAGO IL 60690-2786

MAILED

OCT 15 2009

OFFICE OF PETITIONS

In re Application of :

DENNE, Mark J. et al. :
Application No. 10/930,592 : DECISION ON PETITION
Filed: August 31, 2004 : TO WITHDRAW
Attorney Docket No. **37383-97407** : FROM RECORD

This is a decision on the Request to Withdraw as attorney or agent of record under 37 C.F.R. § 1.36(b), filed September 18, 2009.

The request is **APPROVED**.

A grantable request to withdraw as attorney/agent of record must be signed by every attorney/agent seeking to withdraw or contain a clear indication that one attorney is signing on behalf of another/others. The Office requires the practitioner(s) requesting withdrawal to certify that he, she, or they have: (1) given reasonable notice to the client, prior to the expiration of the response period, that the practitioner(s) intends to withdraw from employment; (2) delivered to the client or a duly authorized representative of the client all papers and property (including funds) to which the client is entitled; and (3) notified the client of any responses that may be due and the time frame within which the client must respond, pursuant 37 CFR 10.40(c).

The request was signed by Michael Wever on behalf of all attorneys of record who are associated with customer No. 23644. All attorneys/agents associated with the Customer Number 23644 have been withdrawn. Applicant is reminded that there is no attorney of record at this time.

All future correspondence will be directed to the inventor Mark Denne at the address indicated below. The application became abandoned for failure to respond to an Office Action mailed April 06, 2009.

Telephone inquiries concerning this decision should be directed to Tredelle Jackson at 571-272-2783.

Tredelle D. Jackson
Paralegal Specialist
Office of Petitions

cc: **MARK J. DENNE**
650 CASTRO STREET, 120-238
MOUNTAIN VIEW CA 94041

UNITED STATES PATENT AND TRADEMARK OFFICE

Commissioner for Patents
United States Patent and Trademark Office
P.O. Box 1450
Alexandria, VA 22313-1450
www.uspto.gov

COPY MAILED

JUL 17 2007

OFFICE OF PETITIONS

KILPATRICK & LICKHART PRESTON GATES ELLIS LLP
535 SMITHFIELD STREET
PITTSBURGH PA 15222

In re Application of	:	
David Oxenstierna et al	:	
Application No. 10/930,642	:	DECISION GRANTING PETITION
Filed: August 31, 2004	:	UNDER 37 CFR 1.137(b)
Attorney Docket No. 030838	:	

This is a decision on the petition, filed February 20, 2007, which is being treated as a petition under 37 CFR 1.137(b) to revive the instant nonprovisional application for failure to timely notify the U.S. Patent and Trademark (USPTO) of the filing of an application in a foreign country, or under a multinational treaty that requires publication of applications eighteen months after filing. *See* 37 CFR 1.137(f).

The petition is **GRANTED**.

Petitioner states that the instant nonprovisional application is the subject of an application filed in an eighteen month publication country on August 1, 2005. However, the USPTO was unintentionally not notified of this filing within 45 days subsequent to the filing of the subject application in an eighteen month publication country.

In view of the above, this application became abandoned pursuant to 35 U.S.C. § 122(b)(2)(B)(iii) and 37 CFR 1.213(c) for failure to timely notify the Office of the filing of an application in a foreign country or under a multilateral international agreement that requires publication of applications 18 months after filing.

A petition to revive an application abandoned pursuant to 35 U.S.C. 122(b)(2)(B)(iii) for failure to notify the USPTO of a foreign filing must be accompanied by:

> (1) the required reply which is met by the notification of such filing in a foreign country or under a multinational treaty;
> (2) the petition fee as set forth in 37 CFR 1.17(m); and
> (3) a statement that the entire delay in filing the required reply from the due date of the reply until the filing of a grantable petition was unintentional.

The instant petition has been found to be in compliance with 37 CFR 1.137(b). Accordingly, the failure to timely notify the

USPTO of a foreign or international filing within 45 days after the date of filing of such foreign or international application as provided by 35 U.S.C. § 122(b)(2)(B)(iii) and 37 CFR 1.213(c) is accepted as having been unintentionally delayed.

The previous Request and Certification under 35 U.S.C. § 122(b)(2)(B)(i) has been rescinded. A Notice Regarding Rescission of Nonpublication Request which sets forth the projected publication date of October 25, 2007 accompanies this decision on petition.

Any inquiries concerning this decision may be directed to the undersigned at (571) 272-3208.

This application is being forwarded to Technology Center Art Unit 2169 for examination in due course.

Karen Creasy

Karen Creasy
Petitions Examiner
Office of Petitions

ATTACHMENT: Notice Regarding Rescission of Nonpublication Request

UNITED STATES PATENT AND TRADEMARK OFFICE

UNITED STATES DEPARTMENT OF COMMERCE
United States Patent and Trademark Office
Address: COMMISSIONER FOR PATENTS
P.O. Box 1450
Alexandria, Virginia 22313-1450
www.uspto.gov

APPLICATION NUMBER	FILING/RECEIPT DATE	FIRST NAMED APPLICANT	ATTY. DOCKET NO.
10/930,642	08/31/2004	David Oxenstierna	030838

CONFIRMATION NO. 8114

26285
KIRKPATRICK & LOCKHART PRESTON GATES ELLIS LLP
535 SMITHFIELD STREET
PITTSBURGH, PA 15222

Date Mailed: 07/17/2007

Communication Regarding Rescission Of Nonpublication Request and/or Notice of Foreign Filing

Applicant's rescission of the previously-filed nonpublication request and/or notice of foreign filing is acknowledged. The paper has been reflected in the Patent and Trademark Office's (USPTO's) computer records so that the earliest possible projected publication date can be assigned.

The projected publication date is 10/25/2007.

If applicant rescinded the nonpublication request before or on the date of "foreign filing,"[1] then no notice of foreign filing is required.

If applicant foreign filed the application after filing the above application and before filing the rescission, and the rescission did not also include a notice of foreign filing, then a notice of foreign filing (not merely a rescission) is required to be filed within 45 days of the date of foreign filing. See 35 U.S.C. § 122(b)(2)(B)(iii), and Clarification of the United States Patent and Trademark Office's Interpretation of the Provisions of 35 U.S.C. § 122(b)(2)(B)(ii)-(iv), 1272 Off. Gaz. Pat. Office 22 (July 1, 2003).

If a notice of foreign filing is required and is not filed within 45 days of the date of foreign filing, then the application becomes abandoned pursuant to 35 U.S.C. § 122(b)(2)(B)(iii). In this situation, applicant should either file a petition to revive or notify the Office that the application is abandoned. See 37 CFR 1.137(f). Any such petition to revive will be forwarded to the Office of Petitions for a decision. Note that the filing of the petition will not operate to stay any period of reply that may be running against the application.

Questions regarding petitions to revive should be directed to the Office of Petitions at (571) 272-3282. Questions regarding publications of patent applications should be directed to the patent application publication hotline at (703) 605-4283 or by e-mail pgpub@uspto.gov.

[1] Note, for purpose of this notice, that "foreign filing" means "filing an application directed to the same invention in another country, or under a multilateral international agreement, that requires publication of applications 18 months after filing".

UNITED STATES PATENT AND TRADEMARK OFFICE

Commissioner for Patents
United States Patent and Trademark Office
P.O. Box 1450
Alexandria, VA 22313-1450
www.uspto.gov

K&L GATES LLP
210 SIXTH AVENUE
PITTSBURGH PA 15222-2613

MAILED

JUN 29 2010

OFFICE OF PETITIONS

In re Application of :
Oxenstierna et al. :
Application No. 10/930,642 : ON APPLICATION FOR
Filed: August 31, 2004 : PATENT TERM ADJUSTMENT
Docket No. 030838 :

This is in response to the APPLICATION FOR PATENT TERM ADJUSTMENT, filed April 27, 2010. The petition will be treated under 37 C.F.R. § 1.705(b). Applicants submit that the correct patent term adjustment to be indicated on the patent is seven hundred eighty (780) days, not seventy-five (75) days as calculated by the Office as of the mailing of the initial determination of patent term adjustment. Applicants request this correction solely on the basis that the Office will take in excess of three years to issue this patent.

As the instant application for patent term adjustment requests reconsideration of the patent term adjustment as it relates to the Office's failure to issue the patent within 3 years of the filing date, the application for patent term adjustment under 37 CFR 1.705(b) is **DISMISSED as PREMATURE**.

Knowledge of the actual date the patent issues is required to calculate the amount, if any, of additional patent term patentees are entitled to for Office failure to issue the patent within 3 years. See § 1.702(b). This is true even where a request for continued examination (RCE) was filed. The computer will not undertake the § 1.702(b) calculation until the actual date of issuance of the patent has been determined. Likewise, the computer will not calculate any further Office delay under § 1.702(a)(4) or applicant delay under § 1.704(c)(10) until the actual date of issuance of the patent has been determined. As such, the Office can not make a determination on the correctness of the patent term adjustment until the patent has issued.

Requesting reconsideration of the patent term adjustment to be indicated on the patent under 37 CFR 1.705(b) based on the initial determination of patent term adjustment and a projected issuance date of the patent or even the filing date of the request for continued examination is premature. Accordingly, it is appropriate to dismiss as premature such a request.

Rather than file an application for patent term adjustment under 37 CFR 1.705(b) contesting the 37 CFR 1.702(b) calculation at the time of the mailing of the notice of allowance, applicants are advised that they may wait until the time of the issuance of the patent and file a request for reconsideration of the patent term adjustment pursuant to 37 CFR 1.705(d). As the USPTO does not calculate the amount of time earned pursuant to 37 CFR 1.702(b) until the time of the issuance of the patent, the Office will consider any request for reconsideration of the patent term adjustment due to an error in the calculation of 37 CFR 1.702(b) to be timely if the request for reconsideration is filed within two months of the issuance of the patent. However, as to all other bases for contesting the initial determination of patent term adjustment received with the notice of allowance, applicants must timely file an application for patent term adjustment prior to the payment of the issue fee[1].

The Office acknowledges submission of the $200.00 fee set forth in 37 CFR 1.18(e) for consideration of the application for patent term adjustment under 37 CFR 1.705(b).

Any request for reconsideration of the patent term adjustment indicated on the patent must be timely filed within 2 months after issuance pursuant to 37 CFR 1.705(d) and must include payment of the required fee under 37 CFR 1.18(e).

---

[1] For example, if applicant disputes both the calculation of patent term adjustment under 37 CFR 1.702(a)(1) for Office failure to mail a first Office action or notice of allowance not later than fourteen months after the date on which the application was filed and under 37 CFR 1.702(b) for Office failure to issue a patent within three years of the actual filing date of the application, then applicant must still timely file an application for patent term adjustment prior to the payment of the issue fee to contest the calculation of Office delay in issuing a first Office action or notice of allowance. See 37 CFR 1.705(b) and 35 U.S.C. 154(b)(3)(B). A dispute as to the calculation of the §1.702(a)(1) period raised on request for reconsideration of patent term adjustment under 37 CFR 1.705(d) will be dismissed as untimely filed.

The Office of Data Management has been advised of this decision. This application is being referred to the Office of Data Management for issuance of the patent.

Telephone inquiries specific to this decision should be directed to the undersigned at (571) 272-3230.

Shirene Willis Brantley

Shirene Willis Brantley
Senior Petitions Attorney
Office of Petitions

UNITED STATES PATENT AND TRADEMARK OFFICE

Commissioner for Patents
United States Patent and Trademark Office
P.O. Box 1450
Alexandria, VA 22313-1450
www.uspto.gov

LAW OFFICES OF CHRISTOPHER L. MAKAY
1634 Milam Building
115 East Travis Street
San Antonio, TX 78205

COPY MAILED

MAR 1 0 2005

OFFICE OF PETITIONS

In re Application of :
Baczewski and Dillingham :
Application No. 10/930,658 :
Filed: August 31, 2004 :
Attorney Docket No. B-0111.02 :

DECISION GRANTING PETITION

This is a decision on the petition filed January 24, 2005, to vacate the language in the "Notice to File Missing Parts of Non-provisional Application" (the "Notice") that was mailed January 14, 2005.

The petition is **granted**.

On August 31, 2004, the above-identified application was filed. However, on January 14, 2005, the Office of Initial Patent Examination mailed the Notice stating that application had been accorded a filing date of August 31, 2004, and advising applicant that the oath or declaration appeared to have been missing. The notice allowed an extendable period for reply of two months from its mailing date and required payment of a surcharge for the late filing of the oath or declaration.

In response, on January 24, 2005, applicant filed the present petition, and a copy of the declaration that included a certificate of mailing under 37 CFR 1.8 indicating that the declaration was mailed on August 31, 2004.

Upon review of the record, the declaration was not found among the application papers. However, the evidence is convincing that the declaration was mailed on August 31, 2004, and subsequently misplaced by the Office. Because the declaration includes a certificate of mailing under 37 CFR 1.8, and is not excluded from claiming the benefit of 37 CFR 1.8(a)(1) by 37 CFR 1.8(a)(2), the declaration is deemed to have been received on August 31, 2004.

The Notice to File Missing Parts of Non-provisional Application was, therefore, issued in error and is vacated, accordingly.

The application file is being directed to the Office of Initial Patent Examination for further processing.

Any inquiries related to this decision should be directed to the undersigned at (571) 272-3222.

Kenya A. McLaughlin
Petitions Attorney
Office of Petitions

UNITED STATES PATENT AND TRADEMARK OFFICE

COMMISSIONER FOR PATENTS
UNITED STATES PATENT AND TRADEMARK OFFICE
P.O. BOX 1450
ALEXANDRIA, VA 22313-1450
www.uspto.gov

DIGITAL THEATER SYSTEMS, INC.
5171 CLARKTON DRIVE
AGOURA HILLS, CA 91301

COPY MAILED

SEP 13 2007

OFFICE OF PETITIONS

In re Application of :
William P. Smith :
Application No. 10/930,659 : DECISION ON PETITION
Filed: August 31, 2004 :
Attorney Docket No. 262-23-324 :

This is a decision on the petition under 37 CFR 1.137(b), filed July 9, 2007, to revive the above-identified application.

The petition is **GRANTED**.

This application became abandoned for failure to timely pay the issue and publication fees on or before May 7, 2007, as required by the Notice of Allowance and Fee(s) Due, mailed February 7, 2007. Accordingly, the date of abandonment of this application is May 8, 2007. A Notice of Abandonment was mailed on June 6, 2007.

The petition satisfies the requirements of 37 CFR 1.137(b) in that petitioner has supplied (1) the reply in the form of payment of the issue fee of $1,400 and the publication fee of $300, (2) the petition fee of $1,500, and (3) a proper statement of unintentional delay. Accordingly, the issue and publication fees are accepted as being unintentionally delayed.

Telephone inquiries concerning this decision should be directed to the undersigned at (571) 272-3218.

This application is being referred to Publishing Division for appropriate processing in accordance with this decision on petition.

Frances Hicks

Frances Hicks
Petitions Examiner
Office of Petitions

10/930,659

SPE RESPONSE FOR CERTIFICATE OF CORRECTION

Paper No.: 07-23-2008

DATE : 7-23-08

TO SPE OF : ART UNIT 2615

SUBJECT : Request for Certificate of Correction for Appl. No.: 10/930659 Patent No.: 7283631

Please respond to this request for a certificate of correction within 7 days.

Please review the requested changes/corrections as shown in the **COCIN** document(s) in the IFW application image. No new matter should be introduced, nor should the scope or meaning of the claims be changed.

Should COC be Approved

Please complete the response (see below) and forward the completed response to scanning using document code **COCX**.

Connie Yawb
Certificates of Correction Branch
703-308-9390 ext. 117

Thank You For Your Assistance

The request for issuing the above-identified correction(s) is hereby:

Note your decision on the appropriate box.

- ☒ Approved — All changes apply.
- ☐ Approved in Part — Specify below which changes do not apply.
- ☐ Denied — State the reasons for denial below.

Comments: _____

SPE

2614
Art Unit

PTOL-305 (REV. 7/03) U.S. DEPARTMENT OF COMMERCE Patent and Trademark Office

UNITED STATES PATENT AND TRADEMARK OFFICE

Commissioner for Patents
United States Patent and Trademark Office
P.O. Box 1450
Alexandria, VA 22313-1450
www.uspto.gov
DIW 02-05

SCHEEF & STONE, L.L.P.
SUITE 1400
5956 SHERRY LANE
DALLAS TX 75225

COPY MAILED

FEB 2 5 2005

OFFICE OF PETITIONS

In re Application of	:
Messenger and Tabikh	:
Application No. 10/930,680	: DECISION REFUSING STATUS
Filed: 31 August, 2004	: UNDER 37 CFR 1.47(a)
Attorney Docket No. NC42785	:
9023.010	:

This is in response to the petition filed under 37 CFR 1.47(a) on 31 January, 2005.

The petition is **DISMISSED**.

Rule 47 applicant is given TWO MONTHS from the mailing date of this decision to reply, correcting the below-noted deficiencies. Any reply should be entitled "Request for Reconsideration of Petition Under 37 CFR 1.47(a)," and should only address the deficiencies noted below, except that the reply may include an oath or declaration executed by the non-signing inventor. **FAILURE TO RESPOND WILL RESULT IN ABANDONMENT OF THE APPLICATION.** Extensions of time may be obtained in accordance with 37 CFR 1.136(a).

The above-identified application was filed on 31 August, 2004, without an executed oath or declaration. Accordingly, on 26 October, 2004, Initial Patent Examination Division mailed a Notice to File Missing Parts of Nonprovisional Application, requiring an executed oath or declaration, the statutory basic filing fee, a surcharge for their late filing, and replacement drawings in compliance with 37 CFR 1.84 and 1.121.

In response, on 31 January, 2005 (certificate of mailing date 26 January, 2005), petitioners filed replacement drawings, the

present petition, the petition fee, statutory basic filing fee, and surcharge and a declaration naming Henry Messenger and Sami Tabikh as joint inventors and signed by joint inventor Messenger on behalf of himself and non-signing joint inventor Tabikh.

Petitioners assert that a copy of the application and declaration were sent to the non-signing inventor. No response, however, was received.

A grantable petition under 37 CFR 1.47(a) requires:

(1) proof that the non-signing inventor cannot be reached or located, notwithstanding diligent effort, or refuses to sign the oath or declaration after having been presented with the application papers (specification, claims and drawings);
(2) an acceptable oath or declaration in compliance with 35 U.S.C. §§ 115 and 116;
(3) the petition fee;
(4) a surcharge of $130 or $65 (small entity) if the petition and/or declaration is not filed at the time of filing the application, and
(5) a statement of the last known address of the non-signing inventor.

The petition lacks item (1) and (2).

In regards to item (1), the petition states, in pertinent part "[o]n November 17, 2004, the undersigned petitioner sent a package containing a copy of the application, the Inventors' declaration, and a letter that requested review of the application and execution of the declaration, to Sami Tabikh...[at]...Mr. Tabikh's last known address."

While the petition is signed by registered patent attorney Robert H. Kelly, it is unclear from the petition whether attorney Kelly has first-hand knowledge of the sending of the application papers to the non-signing inventor. Any renewed petition should clarify whether attorney Kelly or another individual actually sent the application papers to the non-signing inventor. If the application papers were sent by a different individual, that person who actually sent the application papers to the non-signing inventor should provide details set forth in an affidavit or declaration of facts by a person having first-hand knowledge of the details.

Likewise, before a *bona fide* refusal to sign the declaration can be alleged, petitioners must show that a copy of the application

was sent or given to the inventor. If the inventor refuses in writing, petitioners must submit a copy of that written refusal with any renewed petition. If the refusal was made orally to a person, then that person must provide details of the refusal in an affidavit or declaration of fact.

With regards to item (2), the declaration submitted with the present petition is defective because it does not include the citizenship for the non-signing inventor. A statement of the inventor's citizenship is a statutory requirement and cannot be waived.[1] A new declaration containing the residence, mailing address, and citizenship of both of the inventors and signed by the signing inventor on behalf of himself and the non-signing inventors in compliance with 37 CFR 1.63 and 1.64 must be submitted.

The petition fee will be charged to counsel's deposit account, No. 50-2032, as authorized in the request for extension of time filed with the present petition.

By mail: Mail Stop Petition
Commissioner for Patents
P.O. Box 1450
Alexandria, VA 22313-1450

By FAX: (703) 872-9306
Attn: Office of Petitions

By hand: Customer Service Window
Mail Stop Petition
Randolph Building
401 Dulany Street
Alexandria, VA 22314

Telephone inquiries related to this decision should be directed to the undersigned at 571-272-3231.

Douglas I. Wood
Senior Petitions Attorney
Office of Petitions

[1] 35 U.S.C. § 115, MPEP 605.01.

UNITED STATES PATENT AND TRADEMARK OFFICE

Commissioner for Patents
United States Patent and Trademark Office
P.O. Box 1450
Alexandria, VA 22313-1450
www.uspto.gov
DIW May-05

SCHEEF & STONE, L.L.P.
SUITE 1400
5956 SHERRY LANE
DALLAS TX 75225

COPY MAILED
MAY 12 2005
OFFICE OF PETITIONS

In re Application of	:
Messenger and Tabikh	: DECISION REFUSING STATUS
Application No. 10/930,680	: UNDER 37 CFR 1.47(a)
Filed: 31 August, 2004	:
Atty Dcket No. NC42785 9023.010	:

This is in response to the renewed petition filed under 37 CFR 1.47(a) on 14 April, 2005.

The petition is again **DISMISSED**.

Rule 47 applicant is given TWO MONTHS from the mailing date of this decision to reply, correcting the below-noted deficiencies. Any reply should be entitled "Request for Reconsideration of Petition Under 37 CFR 1.47(a)," and should only address the deficiencies noted below, except that the reply may include an oath or declaration executed by the non-signing inventor. **FAILURE TO RESPOND WILL RESULT IN ABANDONMENT OF THE APPLICATION.** Extensions of time may be obtained in accordance with 37 CFR 1.136(a).

The above-identified application was filed on 31 August, 2004, without an executed oath or declaration. Accordingly, on 26 October, 2004, Initial Patent Examination Division mailed a Notice to File Missing Parts of Nonprovisional Application, requiring an executed oath or declaration, the statutory basic filing fee, a surcharge for their late filing, and replacement drawings in compliance with 37 CFR 1.84 and 1.121.

In response, on 31 January, 2005 (certificate of mailing date 26 January, 2005), petitioners filed replacement drawings, a

petition under 37 CFR 1.47(a), the petition fee, statutory basic filing fee, and surcharge and a declaration naming Henry Messenger and Sami Tabikh as joint inventors and signed by joint inventor Messenger on behalf of himself and non-signing joint inventor Tabikh. The petition was dismissed on 25 February, 2005.

The present renewed petition was filed on 14 April, 2005. Petitioners again assert that a copy of the application and declaration were sent to the non-signing inventor. No response, however, was received. Petitioners have provided a verified statement by Diane Taylor, counsel's legal assistant, stating that she sent a copy of the application to the non-signing inventor on 17 November, 2004. Petitioners have also included an Application Data Sheet (ADS) to correct the deficiencies noted in the declaration.

A grantable petition under 37 CFR 1.47(a) requires:

(1) proof that the non-signing inventor cannot be reached or located, notwithstanding diligent effort, or refuses to sign the oath or declaration after having been presented with the application papers (specification, claims and drawings);
(2) an acceptable oath or declaration in compliance with 35 U.S.C. §§ 115 and 116;
(3) the petition fee;
(4) a surcharge of $130 or $65 (small entity) if the petition and/or declaration is not filed at the time of filing the application, and
(5) a statement of the last known address of the non-signing inventor.

The petition lacks item (2).

With regards to item (2), petitioners have not submitted a declaration including the citizenship for the non-signing inventor. The citizenship of an inventor may not be supplied or corrected by means of an ADS.[1] Rather, a new oath or declaration is required when the citizenship has been omitted. A statement of the inventor's citizenship is a statutory requirement and cannot be waived.[2] A new declaration containing the residence, mailing address, and citizenship of both of the inventors and

---

[1] See 37 CFR 1.63(c); 37 CFR 1.76(c)(1).

[2] 35 U.S.C. § 115, MPEP 605.01.

signed by the signing inventor on behalf of himself and the non-signing inventors in compliance with 37 CFR 1.63 and 1.64 must be submitted.

By mail: Mail Stop Petition
Commissioner for Patents
P.O. Box 1450
Alexandria, VA 22313-1450

By FAX: (703) 872-9306
Attn: Office of Petitions

By hand: Customer Service Window
Mail Stop Petition
Randolph Building
401 Dulany Street
Alexandria, VA 22314

Telephone inquiries related to this decision should be directed to the undersigned at 571-272-3231.

Douglas I. Wood
Senior Petitions Attorney
Office of Petitions

UNITED STATES PATENT AND TRADEMARK OFFICE

Commissioner for Patents
United States Patent and Trademark Office
P.O. Box 1450
Alexandria, VA 22313-1450
www.uspto.gov
DTW Sep-05

SCHEEF & STONE, L.L.P.
SUITE 1400
5956 SHERRY LANE
DALLAS TX 75225

COPY MAILED
SEP 07 2005
OFFICE OF PETITIONS

In re Application of	:
Messenger and Tabikh	: DECISION REFUSING STATUS
Application No. 10/930,680	: UNDER 37 CFR 1.47(a)
Filed: 31 August, 2004	:
Atty Dcket No. NC42785 9023.010	:

This is in response to the twice renewed petition filed under 37 CFR 1.47(a) on 15 August, 2005.

The petition is again **DISMISSED**.

Rule 47 applicant is given TWO MONTHS from the mailing date of this decision to reply, correcting the below-noted deficiencies. Any reply should be entitled "Request for Reconsideration of Petition Under 37 CFR 1.47(a)," and should only address the deficiencies noted below, except that the reply may include an oath or declaration executed by the non-signing inventor. **FAILURE TO RESPOND WILL RESULT IN ABANDONMENT OF THE APPLICATION.** Extensions of time may be obtained in accordance with 37 CFR 1.136(a).

The above-identified application was filed on 31 August, 2004, without an executed oath or declaration. Accordingly, on 26 October, 2004, Initial Patent Examination Division mailed a Notice to File Missing Parts of Nonprovisional Application, requiring an executed oath or declaration, the statutory basic filing fee, a surcharge for their late filing, and replacement drawings in compliance with 37 CFR 1.84 and 1.121.

In response, on 31 January, 2005 (certificate of mailing date 26 January, 2005), petitioners filed replacement drawings, a

petition under 37 CFR 1.47(a), the petition fee, statutory basic filing fee, and surcharge and a declaration naming Henry Messenger and Sami Tabikh as joint inventors and signed by joint inventor Messenger on behalf of himself and non-signing joint inventor Tabikh. The petition was dismissed on 25 February, 2005. The renewed petition filed on 14 April, 2005, was dismissed on 12 May, 2005.

The present renewed petition was filed on 15 August, 2005, accompanied by a one (1) month extension of time. Petitioners again assert that a copy of the application and declaration were sent to the non-signing inventor. A copy of a letter dated 17 November, 2004, transmitting a copy of the application to the non-signing inventor at his last known address has been enclosed therewith. Petitioners have also provided a copy of the declaration previously signed by the signing inventor, to which the citizenship of the non-signing inventor has been added.

A grantable petition under 37 CFR 1.47(a) requires:

(1) proof that the non-signing inventor cannot be reached or located, notwithstanding diligent effort, or refuses to sign the oath or declaration after having been presented with the application papers (specification, claims and drawings);
(2) an acceptable oath or declaration in compliance with 35 U.S.C. §§ 115 and 116;
(3) the petition fee;
(4) a surcharge of $130 or $65 (small entity) if the petition and/or declaration is not filed at the time of filing the application, and
(5) a statement of the last known address of the non-signing inventor.

The petition lacks item (2).

With regard to item (2), non-initialed and/or non-dated alterations have been made to the oath or declaration.[1] A new oath or declaration is required because the citizenship of the non-signing inventor was added to the declaration previously executed and dated 18 October, 2004, by the signing inventor. The wording of an oath or declaration cannot be amended. If the wording is not correct or if all of the required affirmations have not been made or if it has not been properly subscribed to, a new oath or declaration is required. The new oath or declaration must properly identify the application of which it is

[1] See 37 CFR 1.52(c).

to form a part, preferably by application number and filing date in the body of the oath or declaration.[2]

A new declaration containing the residence, mailing address, and citizenship of both of the inventors and signed by the signing inventor on behalf of himself and the non-signing inventor in compliance with 37 CFR 1.63 and 1.64 must be submitted.

Further correspondence with respect to this matter should be addressed as follows:

By mail: Mail Stop Petition
Commissioner for Patents
P.O. Box 1450
Alexandria, VA 22313-1450

By FAX: (571) 273-8300
Attn: Office of Petitions

By hand: Customer Service Window
Mail Stop Petition
Randolph Building
401 Dulany Street
Alexandria, VA 22314

Telephone inquiries related to this decision should be directed to the undersigned at 571-272-3231.

D Wood

Douglas I. Wood
Senior Petitions Attorney
Office of Petitions

[2] See MPEP § § 602.01 and 602.02.

UNITED STATES PATENT AND TRADEMARK OFFICE

Commissioner for Patents
United States Patent and Trademark Office
P.O. Box 1450
Alexandria, VA 22313-1450
www.uspto.gov
DIW Jan-06

ALSTON & BIRD LLP
BANK OF AMERICA PLAZA
101 SOUTH TRYON STREET, SUITE 4000
CHARLOTTE NC 28280-4000

COPY MAILED

JAN 30 2006

OFFICE OF PETITIONS

In re Application of	:	
Messenger and Tabikh	:	
Application No. 10/930,680	:	DECISION ACCORDING STATUS
Filed: 31 August, 2004	:	UNDER 37 CFR 1.47(a)
Atty Docket No. 042933/303550	:	

This is in response to the thrice renewed petition filed under 37 CFR 1.47(a) on 27 December, 2005.

The petition is **GRANTED**.

Petitioners have shown that the non-signing inventor, Sami A. Tabikh, has refused to review the sign the declaration after having been sent a copy of the application. Specifically, petitioners have shown that a copy of the application was mailed to the last known address of the non-signing inventor. However, the non-signing inventor failed to return an executed declaration naming him as a joint inventor along with Henry Messenger.

The above-identified application and papers have been reviewed and found in compliance with 37 CFR 1.47(a). This application is hereby accorded Rule 1.47(a) status.

As provided in Rule 1.47(c), this Office will forward notice of this application's filing to the non-signing inventor at the address given in the Declaration. Notice of the filing of this application will also be published in the *Official Gazette*.

The application is being referred to Technology Center Art Unit 2664 for examination in due course.

Telephone inquiries related to this decision should be directed to the undersigned at 571-272-3231.

DWood

Douglas I. Wood
Senior Petitions Attorney
Office of Petitions

UNITED STATES PATENT AND TRADEMARK OFFICE

Commissioner for Patents
United States Patent and Trademark Office
P.O. Box 1450
Alexandria, VA 22313-1450
www.uspto.gov
DIW Jan-06

Sami A. Tabikh
686 Kern Street
Richmond CA 94803

COPY MAILED

JAN 30 2006

OFFICE OF PETITIONS

In re Application of
Messenger et al.
Application No. 10/930,680
Filed: 31 August, 2004
For: APPARATUS, AND ASSOCIATED METHOD, FOR ASYNCHORNOUSLY PRE-RESERVING CHANNEL TO EFFECTUATED AN INTERACTIVE PACKET COMMUNICATION SERVICE IN A RADIO COMMUNICATION SYSTEM

Dear Mr. Tabkih:

You are named as a joint inventor in the above identified United States patent application, filed under the provisions of 35 U.S.C. 116 (United States Code), and 37 CFR 1.47(a), Rules of Practice in Patent Cases. Should a patent be granted on the application you will be designated therein as a joint inventor.

As a named inventor you are entitled to inspect any paper in the file wrapper of the application, order copies of all or any part thereof (at a prepaid cost per 37 CFR 1.19) or make your position of record in the application. Alternatively, you may arrange to do any of the preceding through a registered patent attorney or agent presenting written authorization from you. If you care to join the application, counsel of record (see below) would presumably assist you. Joining in the application would entail the filing of an appropriate oath or declaration by you pursuant to 37 CFR 1.63.

Telephone inquiries regarding this communication should be directed to the undersigned at 571/272-3231. Requests for information regarding your application should be directed to the File Information Unit at 703/308-2733. Information regarding how to pay for and order a copy of the application, or a specific paper in the application, should be directed to Certification Division at 571/272-3150 or 1-800-972-6382 (outside the Washington D.C. area).

D Wood

Douglas I. Wood
Senior Petitions Attorney
Office of Petitions

ALSTON & BIRD LLP
BANK OF AMERICA PLAZA
101 SOUTH TRYON STREET, SUITE 4000
CHARLOTTE NC 28280-4000

SPE RESPONSE FOR CERTIFICATE OF CORRECTION

Paper No.: _____

DATE : September 4, 2009

TO SPE OF : ART UNIT 1642

SUBJECT : Request for certificate of correction for Appln.no. 10/930686

Please respond to this request for a certificate of correction within 7 days.

FOR IFW FILES:

Please review the requested changes/corrections as shown in the **COCIN** document(s) in the IFW application image. No new matter should be introduced, nor should the scope or meaning of the claims be changed.

Please complete the response (see below) and forward the completed response to scanning using document code **COCX**.

FOR PAPER FILES:

Please review the requested changes/corrections as shown in the attached certificate of correction. Please complete this form (see below) and forward it with the file to:

Certificates of Correction Branch (CofC)
South Tower - 9A22
Palm Location 7580

Magdalene Talley
Certificates of Correction Branch
703-308-9390 ext. 120

Thank You For Your Assistance

The request for issuing the above-identified correction(s) is hereby:
Note your decision on the appropriate box.

- [x] **Approved** — All changes apply.
- [ ] **Approved in Part** — Specify below which changes **do not** apply.
- [ ] **Denied** — State the reasons for denial below.

Comments: _____

Charles Tsang
SPE Art Unit 1654

UNITED STATES PATENT AND TRADEMARK OFFICE

Commissioner for Patents
United States Patent and Trademark Office
P.O. Box 1450
Alexandria, VA 22313-1450
www.uspto.gov

Paper No.

PERKINS COIE LLP/MSFT
P. O. BOX 1247
SEATTLE WA 98111-1247

MAILED

JUN 29 2009

OFFICE OF PETITIONS

In re Application of	:	
Chen et al.	:	
Application No. 10/930,687	:	ON APPLICATION FOR
Filed: August 31, 2004	:	PATENT TERM ADJUSTMENT
Atty Docket No. 418268066US	:	

This is in response to the APPLICATION FOR PATENT TERM ADJUSTMENT RECONSIDERATION UNDER 37 C.F.R. § 1.705(b) filed on December 18, 2008. Applicant requests that the determination of patent term adjustment be increased from seven hundred eighty-two (782) days by four hundred four (404) days to one thousand one hundred eighty-six (1186) days, if the patent issues on Tuesday, March 31, 2009. Applicant requests this correction on the basis that the Office will take in excess of three years to issue this patent.

As the instant application for patent term adjustment requests reconsideration of the patent term adjustment as it relates to the Office's failure to issue the patent within 3 years of the filing date, a decision is being **held in abeyance** until after the actual patent date. Knowledge of the actual date the patent issues is required to calculate the amount, if any, of additional patent term patentee is entitled to for Office failure to issue the patent within 3 years. See § 1.703(b).

Applicant is given **TWO (2) MONTHS** from the issue date of the patent to file a written request for reconsideration of the patent term adjustment for Office failure to issue the patent within 3 years. A copy of this decision should accompany the request. Applicant may seek such consideration without payment of an additional fee. However, as to all other bases for seeking reconsideration of the patent term adjustment indicated in the patent, all requirements of § 1.705(d) must be met.

Requests for reconsideration on other bases must be timely filed and must include payment of the required fee.

Rather than file the request for reconsideration of Patent Term Adjustment at the time of the mailing of the notice of allowance, applicant is advised that they may wait until the time of the issuance of the patent and file a request for reconsideration of the patent term pursuant to 37 CFR 1.705(d). The USPTO notes that it does not calculate the amount of time earned pursuant to 37 CFR 1.702(b) until the time of the issuance of the patent and accordingly, the Office will consider any request for reconsideration of the patent term adjustment due to an error in the calculation of 37 CFR 1.702(b) to be timely if the request for reconsideration is filed within two months of the issuance of the patent.

The Office acknowledges submission of the $200.00 fee set forth in 37 CFR 1.18(e). No additional fees are required.

Applicants are reminded that any delays by the Office pursuant to 37 CFR 1.702(a)(4) and 1.702(b) and any applicant delays under 37 CFR 1.704(c)(10) will be calculated at the time of the issuance of the patent and applicants will be notified of the revised patent term adjustment to be indicated on the patent in the Issue Notification letter that is mailed to applicants approximately three weeks prior to issuance.

The Office of Data Management has been advised of this decision. This matter is being referred to the Office of Data Management for issuance of the patent.

Telephone inquiries specific to this decision should be directed to the undersigned at (571) 272-3219.

Nancy Johnson

Nancy Johnson
Senior Petitions Attorney
Office of Petitions

DATE 3-14-08

APPLICATION NUMBER 10/930698

DOC CODE Ref Dec, TC

DOC DATE

COPY MAILED

MAR 1 4 2008

OFFICE OF PETITIONS

DELIVER THE ATTACHED FIFLE/DOCUMENT TO THE TC SCANNING CENTER

CONTRACTOR: THE ATTACHED FILE/DOCUMENT MUST BE INDEXED AND SCANNED INTO IFW WITHIN **8** WORK HOURS; UPLOADING OF THE SCANNED IMAGES SHOULD OCCUR NO LATER THAN **16** WORK HOURS FOLLOWING RECEIPT OF THIS REQUEST

AFTER SCANNING, ORIGINAL DOCUMENTS SHOULD BE BOXED IN ACCORDANCE WITH INSTRUCTIONS

UNITED STATES PATENT AND TRADEMARK OFFICE

Commissioner for Patents
United States Patent and Trademark Office
P.O. Box 1450
Alexandria, VA 22313-1450
www.uspto.gov

COPY MAILED

MAR 1 4 2008

OFFICE OF PETITIONS

CLARK & ELBING LLP
101 FEDERAL STREET
BOSTON MA 02110

In re Application of	:	
Gregory D. Cuny et al	:	
Application No. 10/930,690	:	DECISION GRANTING PETITION
Filed: August 30, 2004	:	UNDER 37 CFR 1.313(c)(2)
Attorney Docket No. 00742/194002	:	

This is a decision on the petition under 37 CFR 1.313(c)(2), filed March 14, 2008, to withdraw the above-identified application from issue after payment of the issue fee.

The petition is **GRANTED**.

The above-identified application is withdrawn from issue for consideration of a submission under 37 CFR 1.114 (request for continued examination). *See* 37 CFR 1.313(c)(2).

Petitioner is advised that the issue fee paid on December 31, 2007 cannot be refunded. If, however, this application is again allowed, petitioner may request that it be applied towards the issue fee required by the new Notice of Allowance.[1]

Telephone inquiries should be directed to the undersigned at (571) 272-3208.

This application is being referred to Technology Center AU 1626 for processing of the request for continued examination under 37 CFR 1.114 and for consideration of the concurrently filed IDS.

Karen Creasy

Karen Creasy
Petitions Examiner
Office of Petitions

---

[1] *The request to apply the issue fee to the new Notice may be satisfied by completing and returning the new Part B – Fee(s) Transmittal Form (along with any balance due at the time of submission). Petitioner is advised that the Issue Fee Transmittal Form* ***must*** *be completed and timely submitted to avoid abandonment of the application.*

UNITED STATES PATENT AND TRADEMARK OFFICE

Commissioner for Patents
United States Patent and Trademark Office
P.O. Box 1450
Alexandria, VA 22313-1450
www.uspto.gov

Paper No.

CLARK & ELBING LLP
101 FEDERAL STREET
BOSTON MA 02110

COPY MAILED
DEC 15 2008

In re Application of	:	
Cuny et al.	:	
Application No. 10/930,690	:	LETTER REGARDING
Filed: August 30, 2004	:	PATENT TERM ADJUSTMENT
Atty Docket No. 00742/194002	:	

This is in response to the REQUEST FOR RECONSIDERATION OF PATENT TERM ADJUSTMENT filed November 26, 2008. Pursuant to their duty of good faith and candor to the Office, applicants disclose that the determination of patent term adjustment (PTA) under 35 U.S.C. § 154(b) of three hundred thirty-three (333) days mailed with the Notice of Allowance appears to be in error.

The request for review of the patent term adjustment is **GRANTED**.

The Office has updated the PAIR screen to reflect that the correct Patent Term Adjustment (PTA) determination at the time of the mailing of the Notice of Allowance is **TWO HUNDRED SEVENTY-SIX (276)** days. A copy of the updated PALM screen, showing the correct determination, is enclosed.

On September 12, 2008, the Office mailed a Notice of Allowance with the Determination of Patent Term Adjustment under 35 U.S.C. 154(b) in the above-identified application. The Notice stated that the patent term adjustment to date is 333 days. Applicants state no basis for their assertion that the determination of patent term adjustment appears to be in error.

Nonetheless, a review of the application history reveals that the calculation is incorrect. Pursuant to 37 CFR §§1.704(b, 1.704(c)(8), and 1.704(c)(10) respectively, three additional

periods of reduction for applicant delay should have been entered.

37 CFR 1.704(b) provides that:

> With respect to the grounds for adjustment set forth in §§ 1.702(a) through (e), and in particular the ground of adjustment set forth in § 1.702(b), an applicant shall be deemed to have failed to engage in reasonable efforts to conclude processing or examination of an application for the cumulative total of any periods of time in excess of three months that are taken to reply to any notice or action by the Office making any rejection, objection, argument, or other request, measuring such three-month period from the date the notice or action was mailed or given to the applicant, in which case the period of adjustment set forth in § 1.703 shall be reduced by the number of days, if any, beginning on the day after the date that is three months after the date of mailing or transmission of the Office communication notifying the applicant of the rejection, objection, argument, or other request and ending on the date the reply was filed. The period, or shortened statutory period, for reply that is set in the Office action or notice has no effect on the three-month period set forth in this paragraph.

In this instance, applicants' response to the Notice of Allowance mailed September 27, 2007, was not received by the Office until December 31, 2007. Thus, this response was not filed within the three-month period under 37 CFR 1.704(b) and applicants should have been assessed a reduction of 4 days for the delay in excess of three months (i.e., the number of days in the period beginning on December 28, 2007 and ending on December 31, 2007).

Moreover, 37 CFR 1.704(c) provides, in pertinent part, that:

> Circumstances that constitute a failure of the applicant to engage in reasonable efforts to conclude processing or examination of an application also include the following circumstances, which will result in the following reduction of the period of adjustment set forth in § 1.703 to the extent that the periods are not overlapping:

(8) Submission of a supplemental reply or other paper, other than a supplemental reply or other paper expressly requested by the examiner, after a reply has been filed, in which case the period of adjustment set forth in § 1.703 shall be reduced by the number of days, if any, beginning on the day after the date the initial reply was filed and ending on the date that the supplemental reply or other such paper was filed;

(10) Submission of an amendment under § 1.312 or other paper after a notice of allowance has been given or mailed, in which case the period of adjustment set forth in § 1.703 shall be reduced by the lesser of:

(i) The number of days, if any, beginning on the date the amendment under § 1.312 or other paper was filed and ending on the mailing date of the Office action or notice in response to the amendment under § 1.312 or such other paper; or

(ii) Four months; and

In this instance, after the filing of a response on August 2, 2007, on August 16, 2007, applicants filed an Information Disclosure Statement (IDS). The record supports a conclusion that the IDS was not expressly requested by the examiner and did not include a 1.704(d) statement. Accordingly, pursuant to 37 CFR 1.704(c)(8), the PTA should have been reduced by 14 days, the number of days beginning on the day after the date the initial reply was filed, August 3, 2007, and ending on the date that the IDS was filed, August 16, 2007.

Moreover, after the mailing of the Notice of Allowance on September 27, 2007, on March 14, 2008, applicants filed a Petition to Withdraw from Issue, a Request for Continued Examination (RCE) and an Information Disclosure Statement (IDS). Prior to filing the RCE, applicant paid the Issue Fee. As discussed above, this set the calculation of the period of reduction pursuant to 37 CFR 1.704(b), if any, for applicant delay. The filing of the RCE and IDS after the mailing of the Notice of Allowance on September 27, 2007 constituted a failure to engage pursuant to 37 CFR 1.704(c)(10). This period is 39 days, counting the number of days in the period beginning on March 14, 2008, the date of filing of the RCE and IDS and ending

on April 21, 2008, the date of mailing of the Notice of Allowance in response.

Given the entry of additional periods of reduction of 4, 14 and 39 days, the correct patent term adjustment at the time of mailing of the Notice of Allowance on September 12, 2008 is TWO HUNDRED SEVENTY-SIX (276) days.

As this letter was submitted to advise the Office of an error in applicant's, the Office will not assess the $200.00 fee under 37 CFR 1.18(e). The Office thanks applicant for their good faith and candor in bringing this to the attention of the Office.

The application is being forwarded to the Office of Data Management for issuance of a patent. The patent term adjustment indicated on the patent (as shown on the Issue Notification mailed about three weeks prior to patent issuance) will include any additional adjustment accrued both for Office delay in issuing the patent more than four months after payment of the issue fee and satisfaction of all outstanding requirements, and for the Office taking in excess of three years to issue the patent does not overlap with periods already accorded).

Telephone inquiries specific to this decision should be directed to the undersigned at (571) 272-3219.

Nancy Johnson
Senior Petitions Attorney
Office of Petitions

Enclosure: Copy of REVISED PALM screen

Day : Thursday
Date: 12/11/2008

PALM INTRANET

Time: 18:09:28

PTA Calculations for Application: 10/930690			
Application Filing Date:	08/30/2004	PTO Delay (PTO):	375
Issue Date of Patent:		Three Years:	0
Pre-Issue Petitions:	0	Applicant Delay (APPL):	42
Post-Issue Petitions:	0	Total PTA (days):	276
PTO Delay Adjustment:	-57		

File Contents History

Number	Date	Contents Description	PTO	APPL	START
115	12/11/2008	ADJUSTMENT OF PTA CALCULATION BY PTO		39	
114	12/11/2008	ADJUSTMENT OF PTA CALCULATION BY PTO		4	
113	12/11/2008	ADJUSTMENT OF PTA CALCULATION BY PTO		14	
105	09/12/2008	MAIL NOTICE OF ALLOWANCE			
104	09/10/2008	ISSUE REVISION COMPLETED			
103	09/10/2008	NOTICE OF ALLOWANCE DATA VERIFICATION COMPLETED			
102	09/10/2008	DOCUMENT VERIFICATION			
101	09/09/2008	NOTICE OF ALLOWABILITY			
99	07/21/2008	INFORMATION DISCLOSURE STATEMENT CONSIDERED			
98	07/21/2008	REFERENCE CAPTURE ON IDS			
97	07/21/2008	INFORMATION DISCLOSURE STATEMENT (IDS) FILED			
96	08/13/2008	DATE FORWARDED TO EXAMINER			
95	07/21/2008	AMENDMENT SUBMITTED/ENTERED WITH FILING OF CPA/RCE			
94	08/13/2008	DATE FORWARDED TO EXAMINER			
93	07/21/2008	REQUEST FOR CONTINUED EXAMINATION (RCE)			
92	08/13/2008	DISPOSAL FOR A RCE/CPA/129 (EXPRESS ABANDONMENT IF CPA)			
91	07/21/2008	INFORMATION DISCLOSURE STATEMENT (IDS) FILED			
90	07/21/2008	WORKFLOW - REQUEST FOR RCE - BEGIN			
89	04/22/2008	EXPORT TO INITIAL DATA CAPTURE			
88	04/22/2008	ELECTRONIC REVIEW			
87	04/21/2008	EMAIL NOTIFICATION			

86	04/21/2008	MAIL NOTICE OF ALLOWANCE			
85	04/15/2008	ISSUE REVISION COMPLETED			
84	04/15/2008	DOCUMENT VERIFICATION			
83	04/04/2008	NOTICE OF ALLOWANCE DATA VERIFICATION COMPLETED			
82	03/18/2008	NOTICE OF ALLOWABILITY			
81	03/14/2008	REFERENCE CAPTURE ON IDS			
80	03/14/2008	INFORMATION DISCLOSURE STATEMENT (IDS) FILED			
79	04/15/2008	DATE FORWARDED TO EXAMINER			
78	03/14/2008	REQUEST FOR CONTINUED EXAMINATION (RCE)			
77	04/15/2008	DISPOSAL FOR A RCE/CPA/129 (EXPRESS ABANDONMENT IF CPA)			
66	03/14/2008	INFORMATION DISCLOSURE STATEMENT CONSIDERED			
65	03/14/2008	INFORMATION DISCLOSURE STATEMENT (IDS) FILED			
64	03/17/2008	MAIL-RECORD PETITION DECISION OF GRANTED TO WITHDRAW FROM ISSUE - WITH ASSIGNED PATENT NO.			
63	03/14/2008	RECORD PETITION DECISION OF GRANTED TO WITHDRAW FROM ISSUE - WITH ASSIGNED PATENT NO.			
62	03/14/2008	WITHDRAWAL PATENT CASE FROM ISSUE			
61	03/14/2008	WITHDRAWAL PATENT CASE FROM ISSUE			
60	03/14/2008	PETITION ENTERED			
59	03/14/2008	WORKFLOW - REQUEST FOR RCE - BEGIN			
58	02/29/2008	EMAIL NOTIFICATION			
57	02/27/2008	ISSUE NOTIFICATION MAILED			
56	03/18/2008	PATENT ISSUE DATE USED IN PTA CALCULATION			
55	02/11/2008	EXPORT TO FINAL DATA CAPTURE			
54	02/08/2008	DISPATCH TO FDC			
53	02/08/2008	APPLICATION IS CONSIDERED READY FOR ISSUE			
52	02/08/2008	WORKFLOW - SIGNATORY REVIEW - FINISH			
51	12/31/2007	ISSUE FEE PAYMENT VERIFIED			
50	12/31/2007	ISSUE FEE PAYMENT RECEIVED			
49	12/19/2007	FINISHED INITIAL DATA CAPTURE			

48	09/28/2007	EXPORT TO INITIAL DATA CAPTURE			
47	09/29/2007	ELECTRONIC REVIEW			
46	09/28/2007	EMAIL NOTIFICATION			
45	09/26/2007	WORKFLOW - SIGNATORY REVIEW - BEGIN			
44	09/27/2007	MAIL NOTICE OF ALLOWANCE			
43	09/27/2007	MAIL EXAMINER INTERVIEW SUMMARY (PTOL - 413)			
42	09/27/2007	MAIL EXAMINER'S AMENDMENT			
41	09/24/2007	ISSUE REVISION COMPLETED			
40	09/24/2007	NOTICE OF ALLOWANCE DATA VERIFICATION COMPLETED			
39	09/24/2007	CASE DOCKETED TO EXAMINER IN GAU			
38	09/24/2007	EXAMINER'S AMENDMENT COMMUNICATION			
37	09/24/2007	DOCUMENT VERIFICATION			
36	09/24/2007	NOTICE OF ALLOWABILITY			
35	09/10/2007	EXAMINER INTERVIEW SUMMARY RECORD (PTOL - 413)			
34	08/16/2007	INFORMATION DISCLOSURE STATEMENT CONSIDERED			
33	08/16/2007	INFORMATION DISCLOSURE STATEMENT (IDS) FILED			
32	08/09/2007	DATE FORWARDED TO EXAMINER			
31	08/02/2007	RESPONSE AFTER NON-FINAL ACTION		34	28
30	08/02/2007	REQUEST FOR EXTENSION OF TIME - GRANTED			
29	08/02/2007	REQUEST FOR EXTENSION OF TIME - GRANTED			
28	03/29/2007	MAIL NON-FINAL REJECTION			
27	03/27/2007	NON-FINAL REJECTION			
26	03/02/2007	DATE FORWARDED TO EXAMINER			
25	02/12/2007	SUPPLEMENTAL RESPONSE		0	23
24	03/02/2007	DATE FORWARDED TO EXAMINER			
23	02/12/2007	RESPONSE TO ELECTION / RESTRICTION FILED		3	21
22	02/12/2007	REQUEST FOR EXTENSION OF TIME - GRANTED			
21	11/09/2006	MAIL RESTRICTION REQUIREMENT	375		-1
20	11/07/2006	REQUIREMENT FOR RESTRICTION / ELECTION			
19	08/16/2006	CORRESPONDENCE ADDRESS CHANGE			
18	08/16/2006	CHANGE IN POWER OF ATTORNEY (MAY INCLUDE ASSOCIATE POA)			

17	11/30/2005	CORRECTION - OATH OR DECLARATION NOT REQUIRED			
16	09/29/2005	IFW TSS PROCESSING BY TECH CENTER COMPLETE			
15	09/29/2005	CASE DOCKETED TO EXAMINER IN GAU			
14	01/31/2005	PRELIMINARY AMENDMENT			
13	02/22/2005	APPLICATION RETURN FROM OIPE			
12	02/22/2005	APPLICATION RETURN TO OIPE			
11	02/22/2005	APPLICATION DISPATCHED FROM OIPE			
10	02/22/2005	APPLICATION IS NOW COMPLETE			
9	01/31/2005	PAYMENT OF ADDITIONAL FILING FEE/PREEXAM		5	5
8	01/31/2005	A STATEMENT BY ONE OR MORE INVENTORS SATISFYING THE REQUIREMENT UNDER 35 USC 115, OATH OF THE APPLIC			
7	08/30/2004	CLAIM PRELIMINARY AMENDMENT			
6	02/22/2005	CORRESPONDENCE ADDRESS CHANGE			
5	10/26/2004	NOTICE MAILED--APPLICATION INCOMPLETE--FILING DATE ASSIGNED			
4	10/06/2004	CLEARED BY OIPE CSR			
3	10/06/2004	CASE CLASSIFIED BY OIPE			
2	09/20/2004	IFW SCAN & PACR AUTO SECURITY REVIEW			
1	08/30/2004	INITIAL EXAM TEAM NN			

Search Another: Application# Search

EXPLANATION OF PTA CALCULATION

EXPLANATION OF PTE CALCULATION

To go back, right click here and select Back. To go forward, right click here and select Forward. To refresh, right click here and select Refresh.

Back to OASIS | Home page

UNITED STATES PATENT AND TRADEMARK OFFICE

Commissioner for Patents
United States Patent and Trademark Office
P.O. Box 1450
Alexandria, VA 22313-1450
www.uspto.gov

Paper No.

CLARK & ELBING LLP
101 FEDERAL STREET
BOSTON MA 02110

MAILED

MAY 03 2010

OFFICE OF PETITIONS

In re Patent No. 7,491,743	:	DECISION ON REQUEST
Cuny et al.	:	FOR
Issue Date: February 17, 2009	:	RECONSIDERATION OF
Application No. 10/930,690	:	PATENT TERM ADJUSTMENT
Filed: August 30, 2004	:	and
Atty Docket No. 00742/194002	:	NOTICE OF INTENT TO ISSUE
	:	CERTIFICATE OF CORRECTION

This is a decision on the petition filed on April 17, 2009, which is being treated as a petition under 37 CFR 1.705(d) requesting that the patent term adjustment indicated on the above-identified patent be corrected to indicate that the term of the above-identified patent is extended or adjusted by four hundred seventy-three (473) days.

The petition to correct the patent term adjustment indicated on the above-identified patent is **GRANTED to the extent indicated herein.** The patent term adjustment is corrected to indicate that the term of the above-identified patent is extended or adjusted by **four hundred seventy-two (472)** days.

As the period from the filing date of the request for continued examination (RCE) to the issue date of the patent is not included in the "B" delay period, the over three year period begins on August 31, 2007 and ends on March 13, 2008, the day before the first RCE was filed. See 35 U.S.C. 154(b)(1)(B)(i). Thus, the over 3 year period is 196 not 197 days. Thus, the patent term adjustment is increased to 472, not 473 days.

The Office will *sua sponte* issue a certificate of correction. Pursuant to 37 CFR 1.322, the Office will not issue a certificate of correction without first providing assignee or

patentee an opportunity to be heard. Accordingly, patentees are given **one (1) month or thirty (30) days**, whichever is longer, from the mail date of this decision to respond. No extensions of time will be granted under § 1.136.

The Office acknowledges submission of the $200.00 fee set forth in 37 CFR 1.18(e). No additional fees are required.

The application is being forwarded to the Certificates of Branch for issuance of a certificate of correction. The Office will issue a certificate of correction indicating that the term of the above-identified patent is extended or adjusted by **four hundred seventy-two (472)** days.

Telephone inquiries specific to this matter should be directed to the undersigned at (571) 272-3219.

Nancy Johnson
Senior Petitions Attorney
Office of Petitions

Enclosure: Copy of DRAFT Certificate of Correction

UNITED STATES PATENT AND TRADEMARK OFFICE

CERTIFICATE OF CORRECTION

PATENT : 7,491,743 B2

DATED : **February 17, 2009** **DRAFT**

INVENTOR(S) : Cuny et al.

It is certified that error appears in the above-identified patent and that said Letters Patent is hereby
corrected as shown below:

On the cover page,

[*] Notice: Subject to any disclaimer, the term of this patent is extended or adjusted under 35 USC 154(b) by 276 days

Delete the phrase "by 276 days" and insert – by 472 days--

UNITED STATES PATENT AND TRADEMARK OFFICE

Commissioner for Patents
United States Patent and Trademark Office
P.O. Box 1450
Alexandria, VA 22313-1450
www.uspto.gov

MEDLEN & CARROLL
SUITE 350
101 HOWARD STREET
SAN FRANCISCO, CA 94105

COPY MAILED

MAY 03 2005

OFFICE OF PETITIONS

In re Application of	:	
David R. Milich et al	:	
Application No. 10/930,696	:	DECISION GRANTING STATUS
Filed: August 30, 2004	:	UNDER 37 CFR 1.47(A)
For: MALARIA IMMUNOGEN AND VACCINE	:	

This is in response to the petition under 37 CFR 1.47(a), filed April 8, 2005.

The petition is granted.

Petitioner has shown that the non-signing inventor has refused to join in the filing of the above-identified application.

The above-identified application and papers have been reviewed and found in compliance with 37 CFR 1.47(a). This application is hereby accorded Rule 1.47(a) status. As provided in Rule 1.47(c), this Office will forward notice of this application's filing to the non-signing inventor at the address given in the petition. Notice of the filing of this application will also be published in the Official Gazette.

Telephone inquiries regarding this decision should be directed to Petitions Examiner Wan Laymon at (571) 272-3220.

This matter is being referred to the Office of Initial Patent Examination for preexamination processing.

Frances Hicks

Frances Hicks
Lead Petitions Examiner
Office of Petitions
Office of the Deputy Commissioner
for Patent Examination Policy

UNITED STATES PATENT AND TRADEMARK OFFICE

Commissioner for Patents
United States Patent and Trademark Office
P.O. Box 1450
Alexandria, VA 22313-1450
www.uspto.gov

ASHLEY BIRKETT
2409 OLD RANCH ROAD
ESCONDIDO, CA 92027

In re Application of
David R. Milich and Ashley Birkett
Application No.10/930,696
Filed: August 30, 2004
For: MALARIA IMMUNOGEN AND VACCINE

COPY MAILED

MAY 0 3 2005

OFFICE OF PETITIONS

Dear Mr. Birkett:

You are named as a joint inventor in the above identified United States patent application, filed under the provisions of 35 U.S.C. 116 (United States Code), and 37 CFR 1.47(a), Rules of Practice in Patent Cases. Should a patent be granted on the application you will be designated therein as a joint inventor.

As a named inventor you are entitled to inspect any paper in the file wrapper of the application, order copies of all or any part thereof (at a prepaid cost per 37 CFR 1.19) or make your position of record in the application. Alternatively, you may arrange to do any of the preceding through a registered patent attorney or agent presenting written authorization from you. If you care to join in the application, counsel of record (see below) would presumably assist you. Joining in the application would entail the filing of an appropriate oath or declaration by you pursuant to 37 CFR 1.63.

Telephone inquiries regarding this communication should be directed to Wan Laymon at (571) 272-3220. Requests for information regarding your application should be directed to the File Information Unit at (703) 308-2733. Information regarding how to pay for and order a copy of the application, or a specific paper in the application, should be directed to Certification Division at (703) 308-9726 or 1 (800) 972-6382 (outside the Washington D.C. area).

Frances Hicks

Frances Hicks
Lead Petitions Examiner
Office of Petitions
Office of the Deputy Commissioner
for Patent Examination Policy

cc:
MEDLEN & CARROLL
SUITE 350, 101 HOWARD STREET
SAN FRANCISCO, CA 94105

UNITED STATES PATENT AND TRADEMARK OFFICE

UNITED STATES DEPARTMENT OF COMMERCE
United States Patent and Trademark Office
Address: COMMISSIONER FOR PATENTS
P.O. Box 1450
Alexandria, Virginia 22313-1450
www.uspto.gov

WARE FRESSOLA VAN DER SLUYS & ADOLPHSON, LLP
BRADFORD GREEN, BUILDING 5
755 MAIN STREET, P O BOX 224
MONROE, CT 06468

Mail Date: 06/07/2010

Applicant	: Ramakrishna Vedantham	: DECISION ON REQUEST FOR
Patent Number	: 7631085	: RECALCULATION of PATENT
Issue Date	: 12/08/2009	: TERM ADJUSTMENT IN VIEW
Application No	: 10/930,703	: OF WYETH AND NOTICE OF INTENT TO
Filed	: 08/30/2004	: ISSUE CERTIFICATE OF CORRECTION
		:

The Request for Recalculation is **GRANTED** to the extent indicated.

The patent term adjustment has been determined to be **1467** days. The USPTO will *sua sponte* issue a certificate of correction reflecting the amount of PTA days determined by the recalculation.

Prior to the issuance of the certificate of correction, the USPTO will afford patentee an opportunity to be heard and request reconsideration. Accordingly, patentee has **one month or thirty (30) days**, whichever is longer, to file a request for reconsideration of this patent term adjustment calculation. See 35 U.S.C. 154(b)(3)(B)(ii) and 37 CFR 1.322(a)(4). No extensions of time will be granted under 37 CFR 1.136.

Patentee should use document code PET.OP if electronically filing a request for reconsideration of this patent term adjustment calculation. The patentee must also include the information required by 37 CFR 1.705(b)(2) and the fee required by 37 CFR 1.18(e). If patentee does not file a timely request for reconsideration of this patent term adjustment calculation including the information required by 37 CFR 1.705(b)(2) and the fee required by 37 CFR 1.18(e), the USPTO will issue a certificate of correction reflecting the PTA determination noted above.

Patentee should be aware that in order to preserve the right to review in the United States District Court for the District of Columbia of the USPTO patent term adjustment determination, patentee must ensure that he or she also take the steps required under 35 U.S.C. 154(b)(4)(A) in a timely manner. Nothing in the request for recalculation should be construed as providing an alternative time frame for commencing a civil action under 35 U.S.C. 154(b)(4)(A).

Any questions concerning this decision should be directed to the Office of Patent Legal Administration at 571-272-7702.

UNITED STATES PATENT AND TRADEMARK OFFICE

Commissioner for Patents
United States Patent and Trademark Office
P.O. Box 1450
Alexandria, VA 22313-1450
www.uspto.gov

FINNEGAN, HENDERSON, FARABOW,
GARRETT & DUNNER
LLP
901 NEW YORK AVENUE, NW
WASHINGTON DC 20001-4413

COPY MAILED

JUL 0 7 2009

OFFICE OF PETITIONS

In re Patent No. 7,526,773	:	
Medvedev	:	DECISION ON
Issue Date: April 28, 2009	:	REQUEST FOR RECONSIDERATION
Application No. 10/930,712	:	OF
Filed: August 31, 2004	:	PATENT TERM ADJUSTMENT
Attorney Docket No. 09700.0096-00	:	

This is in response to the "APPLICATION FOR PATENT TERM ADJUSTMENT - PSOT-GRANT," filed June 9, 2009, requesting that the patent term adjustment determination for the above-identified patent be changed from eight hundred twenty-seven(827) days to one thousand two hundred seventy-five (1,275) days. The instant patent issued in the name of SAP AG and the instant request for reconsideration is filed by an attorney of record on their behalf.

The request for reconsideration is granted to the extent that the determination has been reconsidered; however, the request for reconsideration of patent term adjustment is **DISMISSED** with respect to making any change in the patent adjustment determination under 35 U.S.C. § 154(b) of 827 days.

On April 28, 2009, the above-identified application matured into U.S. Patent No. 7,526,773 with a patent term adjustment of 827 days. This request for reconsideration of patent term adjustment was timely filed within two months of the issue date of the patent. See 1.705(d). Pursuant to patentee's authorization, the required fee of $200.00, as set forth in 37 CFR 1.18(e), will be charged to deposit account no. 06-0916.

Patentee requests recalculation of the patent term adjustment based on the decision in *Wyeth v. Dudas*, 580 F. Supp. 2d 138, 88 U.S.P.Q. 2d 1538 (D.D.C. 2008). Patentee asserts that pursuant to *Wyeth*, a PTO delay under §154(b)(1)(A) overlaps with a delay

under §154(b)(1)(B) only if the delays occur on the same day. Patentee maintains that a portion of the period of adjustment due to the Three Year Delay by the Office, pursuant to 37 CFR § 1.703(b), 448 of the 606 days, and the period of adjustment due to examination delay, pursuant to 37 CFR §1.702(a), of 827 days do not overlap as these periods do not occur on the same day.

Patentee argues that the period of adjustment due to the Three Year Delay by the Office, pursuant to 37 CFR § 1.703(b), is 606 days. This 606 day period is calculated based on the application having been filed under 35 U.S.C. §111 on August 31, 2004, and the patent having not issued until April 28, 2009, three years and 606 days later. Patentee asserts that in addition to this 606 day period, he is entitled to a period of adjustment due to examination delay, pursuant to 37 CFR §1.702(a) of 827 days for the failure by the Office to mail at least one of a notification under 35 U.S.C. 132 not later than fourteen months after the date on which the application was filed under 35 U.S.C. 111(a), pursuant to 37 CFR § 1.702(a)(1).

Under 37 CFR § 1.703(f), patentee is entitled to a period of patent term adjustment equal to the period of delays based on the grounds set forth in 37 CFR §1.702 reduced by the period of time equal to the period of time during which applicant failed to engage in reasonable efforts to conclude prosecution pursuant to 37 CFR §1.704. In other words, the period of Office delay reduced by the period of applicant delay. The period of reduction of 0 days for applicant delay is not in dispute. Patentee asserts that the total period of Office delay is the sum of the period of Three Years Delay (606 days) and the period of Examination Delay (827 days) to the extent that these periods of delay are not overlapping.

Patentee contends that only 158 days of the period of delay of 827 days for the Office's failure to mail at least one of a notification under 35 U.S.C. 132 not later than fourteen months after the date on which the application was filed (November 1, 2005 to February 5, 2008) overlap with the Three Year Delay period (September 1, 2007 to April 28, 2009). Patentee asserts that this overlapping period is the 158 days running from September 1, 2007 to February 5, 2008.

Accordingly, patentee submits that the total period of Office Delay is 1,275 days, which is the sum of the period of Three

Year Delay (606 days) and the period of Examination Delay (827 days), reduced by the period of overlap (158 days).

As such, patentee asserts entitlement to a patent term adjustment of 1,275 days (827 +606 reduced by 158 overlap -0 for applicant delay).

The Office agrees that the patent issued 3 years and 606 days after its filing date. The Office agrees that the action detailed above was not taken within the specified time frame, and thus, the entry of period of adjustment of 827 days is correct. At issue is whether patentee should accrue 448 (adjusted for overlap, per patentee's calculations) days of patent term adjustment for the Office taking in excess of three years to issue the patent, as well as, 827 days for Office failure to take a certain action within a specified time frame (or examination delay).

The Office contends that the 606 day period of Three Year Delay overlaps with the 827 days accorded during the pendency of the application. Patentee's interpretation of the period of overlap has been considered and found to be incorrect. Patentee's calculation of the period of overlap is inconsistent with the Office's interpretation of this provision. 35 U.S.C. 154(b)(2)(A) limits the adjustment of patent term, as follows:

> to the extent that the periods of delay attributable to grounds specified in paragraph (1) overlap, the period of any adjustment granted under this subsection shall not exceed the actual number of days the issuance of the patent was delayed.

Likewise, 37 CFR 1.703(f) provides that:

> To the extent that periods of delay attributable to the grounds specified in §1.702 overlap, the period of adjustment granted under this section shall not exceed the actual number of days the issuance of the patent was delayed.

As explained in *Explanation of 37 CFR 1.703(f) and of the United States Patent and Trademark Office Interpretation of 35 U.S.C. 154(b)(2)(A)*, 69 Fed. Reg. 34283 (June 21, 2004), the Office interprets 35 U.S.C. 154(b)(2)(A) as permitting either patent term adjustment under 35 U.S.C. 154(b)(1)(A)(i)-(iv), or patent

term adjustment under 35 U.S.C. 154(b)(1)(B), but not as permitting patent term adjustment under both 35 U.S.C. 154(b)(1)(A)(i)-(iv) and 154(b)(1)(B). Accordingly, the Office implements the overlap provision as follows:

> If an application is entitled to an adjustment under 35 U.S.C. 154(b)(1)(B), the entire period during which the application was pending (except for periods excluded under 35 U.S.C. 154(b)(1)(B)(i)-(iii)), and not just the period beginning three years after the actual filing date of the application, is the period of delay under 35 U.S.C. 154(b)(1)(B) in determining whether periods of delay overlap under 35 U.S.C. 154(b)(2)(A). Thus, any days of delay for Office issuance of the patent more than 3 years after the filing date of the application, which overlap with the days of patent term adjustment accorded prior to the issuance of the patent will not result in any additional patent term adjustment. See 35 U.S.C. 154(b)(1)(B), 35 U.S.C. 154(b)(2)(A), and 37 CFR § 1.703(f). See *Changes to Implement Patent Term Adjustment Under Twenty Year Term; Final Rule*, 65 Fed. Reg. 54366 (Sept. 18, 2000). See also *Revision of Patent Term Extension and Patent Term Adjustment Provisions; Final Rule*, 69 Fed. Reg. 21704 (April 22, 2004), 1282 Off. Gaz. Pat. Office 100 (May 18, 2004). See also *Explanation of 37 CFR 1.703(f) and of the United States Patent and Trademark Office Interpretation of 35 U.S.C. 154(b)(2)(A)*, 69 Fed. Reg. 34283 (June 21, 2004).

The current wording of § 1.703(f) was revised in response to the misinterpretation of this provision by a number of patentees. The rule was slightly revised to more closely track the corresponding language of 35 U.S.C. 154(b)(2)(A). The relevant portion differs only to the extent that the statute refers back to provisions of the statute whereas the rule refers back to sections of the rule. This was not a substantive change to the rule nor did it reflect a change of the Office's interpretation of 35 U.S.C. 154(b)(2)(A). As stated in the *Explanation of 37 CFR 1.703(f) and of the United States Patent and Trademark Office Interpretation of 35 U.S.C. 154(b)(2)(A)*, the Office has consistently taken the position that if an application is entitled to an adjustment under the three-year pendency provision of 35 U.S.C. 154(b)(1)(B), the entire period during which the application was pending before the Office (except for periods excluded under 35 U.S.C. 154(b)(1)(B)(i)-(iii)), and not

just the period beginning three years after the actual filing date of the application, is the relevant period under 35 U.S.C. 154(b)(1)(B) in determining whether periods of delay "overlap" under 35 U.S.C. 154(b)(2)(A).

This interpretation is consistent with the statute. Taken together the statute and rule provide that to the extent that periods of delay attributable to grounds specified in 35 U.S.C. 154(b)(1) and in corresponding §1.702 overlap, the period of adjustment granted shall not exceed the actual number of days the issuance of the patent was delayed. The grounds specified in these sections cover the A) guarantee of prompt Patent and Trademark Office responses, B) guarantee of no more than 3 year application pendency, and C) guarantee or adjustments for delays due to interference, secrecy orders and appeals. A section by section analysis of 35 U.S.C. 154(b)(2)(A) specifically provides that:

> Section 4402 imposes limitations on restoration of term. In general, pursuant to [35 U.S.C.] 154(b)(2)(A)-(C), total adjustments granted for restorations under [35 U.S.C. 154](b)(1) are reduced as follows: (1) To the extent that there are multiple grounds for extending the term of a patent that may exist simultaneously (e.g., delay due to a secrecy order under [35 U.S.C.] 181 and administrative delay under [35 U.S.C.] 154(b)(1)(A)), the term should not be extended for each ground of delay but only for the actual number of days that the issuance of a patent was delayed; See 145 Cong. Rec. S14,718[1]

As such, the period for over 3 year pendency does not overlap only to the extent that the actual dates in the period beginning three years after the date on which the application was filed overlap with the actual dates in the periods for failure of the Office to take action within specified time frames. In other words, consideration of the overlap does not begin three years after the filing date of the application.

In this instance, the relevant period under 35 U.S.C. 154(b)(1)(B) in determining whether periods of delay "overlap"

---

[1] The AIPA is title IV of the Intellectual Property and Communications Omnibus Reform Act of 1999 (S. 1948), which was incorporated and enacted as law as part of Pub. L. 106-113. The Conference Report for H.R. 3194, 106th Cong. 1st Sess. (1999), which resulted in Pub. L. 106-113, does not contain any discussion (other than the incorporated language) of S. 1948. A section-by-section analysis of S. 1948, however, was printed in the Congressional Record at the request of Senator Lott, See 145 Cong. Rec. S14,708-26 (1999)(daily ed. Nov. 17, 1999).

under 35 U.S.C. 154(b)(2)(A) is the entire period during which the application was pending before the Office, August 31, 2004 to April 28, 2009. (There were no periods excluded under 35 U.S.C. 154(b)(1)(B)(i)-(iii)). 827 days of patent term adjustment were accorded prior to the issuance of the patent for the Office failing to respond within a specified time frame during the pendency of the application. The 606 days for Office delay in issuing the patent overlaps with the 827 accorded during the pendency of the application. During that time, the issuance of the patent was delayed by 827 days, not 827 + 448 days. The Office took 14 months and 827 days to issue a first Office action. Otherwise, the Office took all actions set forth in 37 C.F.R. § 1.702(a) within the prescribed timeframes. Nonetheless, given the initial 827 days of Office delay and the time allowed within the timeframes for processing and examination, the patent issued, three years and 606 days after its filing date.

Accordingly, at issuance, the Office properly entered no additional days of patent term adjustment for the Office taking in excess of 3 years to issue the patent, since the period of delay of 606 days attributable to the delay in the issuance of the patent overlaps with the adjustment of 827 days attributable to ground specified in § 1.702(a)(1).

In view thereof, the revised determination of patent term adjustment at the time of the issuance of the patent remains 827 days.

Telephone inquiries specific to this matter should be directed to Shirene Willis Brantley, Senior Petitions Attorney, at (571) 272-3230.

Nancy Johnson

Nancy Johnson
Senior Petitions Attorney
Office of the Deputy Commissioner
for Patent Examination Policy

UNITED STATES PATENT AND TRADEMARK OFFICE

UNITED STATES DEPARTMENT OF COMMERCE
United States Patent and Trademark Office
Address: COMMISSIONER FOR PATENTS
P.O. Box 1450
Alexandria, Virginia 22313-1450
www.uspto.gov

FISH & RICHARDSON P.C.
P.O. BOX 1022
MINNEAPOLIS, MN 55440-1022

Mail Date: 04/20/2010

Applicant	: Frederic M. Klein	: DECISION ON REQUEST FOR
Patent Number	: 7664729	: RECALCULATION of PATENT
Issue Date	: 02/16/2010	: TERM ADJUSTMENT IN VIEW
Appliction No	: 10/930,716	: OF WYETH AND NOTICE OF INTENT TO
Filed	: 08/30/2004	: ISSUE CERTIFICATE OF CORRECTION
		:

The Request for Recalculation is **GRANTED** to the extent indicated.

The patent term adjustment has been determined to be **1129** days. The USPTO will *sua sponte* issue a certificate of correction reflecting the amount of PTA days determined by the recalculation.

Prior to the issuance of the certificate of correction, the USPTO will afford patentee an opportunity to be heard and request reconsideration. Accordingly, patentee has **one month or thirty (30) days**, whichever is longer, to file a request for reconsideration of this patent term adjustment calculation. See 35 U.S.C. 154(b)(3)(B)(ii) and 37 CFR 1.322(a)(4). No extensions of time will be granted under 37 CFR 1.136.

Patentee should use document code PET.OP if electronically filing a request for reconsideration of this patent term adjustment calculation. The patentee must also include the information required by 37 CFR 1.705(b)(2) and the fee required by 37 CFR 1.18(e). If patentee does not file a timely request for reconsideration of this patent term adjustment calculation including the information required by 37 CFR 1.705(b)(2) and the fee required by 37 CFR 1.18(e), the USPTO will issue a certificate of correction reflecting the PTA determination noted above.

Patentee should be aware that in order to preserve the right to review in the United States District Court for the District of Columbia of the USPTO patent term adjustment determination, patentee must ensure that he or she also take the steps required under 35 U.S.C. 154(b)(4)(A) in a timely manner. Nothing in the request for recalculation should be construed as providing an alternative time frame for commencing a civil action under 35 U.S.C. 154(b)(4)(A).

Any questions concerning this decision should be directed to the Office of Patent Legal Administration at 571-272-7702.

UNITED STATES PATENT AND TRADEMARK OFFICE

Commissioner for Patents
United States Patent and Trademark Office
P.O. Box 1450
Alexandria, VA 22313-1450
www.uspto.gov

DANIELS DANIELS & VERDONIK, P.A.
SUITE 200 GENERATION PLAZA
1822 N.C. HIGHWAY 54 EAST
DURHAM NC 27713

COPY MAILED

OCT 1 1 2006

OFFICE OF PETITIONS

In re Application of
Hugh B. Svendsen
Application No. 10/930,719
Filed: August 31, 2004
Attorney Docket No. 1329-003

DECISION ON PETITION
TO WITHDRAW
FROM RECORD

This is a decision on the Request to Withdraw as attorney or agent of record under 37 C.F.R. § 1.36(b), filed August 22, 2005.

The petition is **APPROVED**.

A grantable request to withdraw as attorney/agent of record must be signed by every attorney/agent seeking to withdraw or contain a clear indication that one attorney is signing on behalf of another/others. A request to withdraw will not be approved unless at least 30 (thirty) days would remain between the date of approval and the later of the expiration date of a time to file a response or the expiration date of the maximum time period which can be extended under 37 C.F.R. § 1.136(a).

The request was signed by A. Jose Cortina on behalf of all the attorneys/agents of record.

All attorneys/agents of record have been withdrawn.

Applicant is reminded that there is **no** attorney of record at this time.

The request to change the correspondence of record is not acceptable as the requested correspondence address is not that of: (1) the first named signing inventor; or (2) an intervening assignee of the entire interest under 37 C.F.R. 3.71. All future communications from the Office will be directed to the name signing inventor at the below address until otherwise properly notified by applicant/assignee.

Telephone inquires concerning this decision should be directed to Karen Creasy at 571-272-3208.

This application is being referred to Technology Center AU 2165.

Karen Creasy

Karen Creasy
Petitions Examiner
Office of Petitions

cc:
HUGH B. SVENDSEN
678 BEAR TREE CREEK
CHAPEL HILL, NC 27517

UNITED STATES PATENT AND TRADEMARK OFFICE

COMMISSIONER FOR PATENTS
UNITED STATES PATENT AND TRADEMARK OFFICE
P.O. BOX 1450
ALEXANDRIA, VA 22313-1450
www.uspto.gov

FINNEGAN, HENDERSON, FARABOW,
GARRETT & DUNNER
LLP
901 NEW YORK AVENUE, NW
WASHINGTON DC 20001-4413

COPY MAILED

SEP 08 2009

OFFICE OF PETITIONS

In re Patent No. 7,442,514 :
Issued: October 28, 2008 :
Application No. 10/930,754 : PATENT TERM ADJUSTMENT
Filed: September 1, 2004 :
Dkt. No.: 06478.1457-02 :

This is a decision on the "APPLICATION FOR PATENT TERM ADJUSTMENT - POST GRANT," filed December 23, 2008. This matter is being properly treated under 37 CFR 1.705(d).

The request for reconsideration of patent term adjustment (PTA) is **DISMISSED**.

Patentee requests that the determination of patent term adjustment be corrected from 336 days to 639 days.

The application matured into U.S. Patent No. 7,442,514 on October 28, 2008 with a revised patent term adjustment of 336 days. On December 23, 2008, patentee timely submitted this request for reconsideration of patent term adjustment (with required fee). Patentee asserts that the application is entitled to additional adjustment pursuant to 37 CFR 1.702(b) and argues that the correct number of days of Patent Term Adjustment is 639 days. Patentees request recalculation of the patent term adjustment based on the decision in Wyeth v. Dudas, 580 F. Supp. 2d 138, 88 U.S.P.Q. 2d 1538 (D.D.C. 2008). Patentee maintains that the total non-overlapping PTO delay under §154(b)(1)(A) & (B) is 726 days (303 days + 423 days – zero overlapping days) as these periods do not occur on the same day. Further, given the applicant delay of 87 days, patentee asserts entitlement to 639 days of patent term adjustments (303 days + 423 days – zero days – 87 days) of patent term adjustment.

Patentee's interpretation of the period of overlap has been considered, but found inconsistent with the Office's interpretation of the overlap provision, 35 U.S.C. 154(b)(2)(A).
35 U.S.C. 154(b)(2)(A) limits the adjustment of patent term, as follows:

> To the extent that the periods of delay attributable to grounds specified in paragraph (1) overlap, the period of any adjustment granted under this subsection shall not exceed the actual number of days the issuance of the patent was delayed.

As explained in *Explanation of 37 CFR 1.703(f)*[1] *and of the United States Patent and Trademark Office Interpretation of 35 U.S.C. 154(b)(2)(A)*, 69 Fed. Reg. 34283 (June 21, 2004), the Office interprets 35 U.S.C. 154(b)(2)(A) as permitting either patent term adjustment under 35 U.S.C. 154(b)(1)(A)(i)-(iv), or patent term adjustment under 35 U.S.C. 154(b)(1)(B), but not as permitting patent term adjustment under both 35 U.S.C. 154(b)(1)(A)(i)-(iv) and 154(b)(1)(B). Accordingly, the Office implements the overlap provision as follows:

> If an application is entitled to an adjustment under 35 U.S.C. 154(b)(1)(B), the entire period during which the application was pending (except for periods excluded under 35 U.S.C. 154(b)(1)(B)(i)-(iii)), and not just the period beginning three years after the actual filing date of the application, is the period of delay under 35 U.S.C. 154(b)(1)(B) in determining whether periods of delay overlap under 35 U.S.C. 154(b)(2)(A). Thus, any days of delay for Office issuance of the patent more than 3 years after the filing date of the application, which overlap with the days of patent term adjustment accorded prior to the issuance of the patent will not result in any additional patent term adjustment. See 35 U.S.C. 154(b)(1)(B), 35 U.S.C. 154(b)(2)(A), and 37 CFR § 1.703(f). See *Changes to Implement Patent Term Adjustment Under Twenty Year Term; Final Rule*, 65 Fed. Reg. 54366 (Sept. 18, 2000). See also *Revision of Patent Term Extension and Patent Term Adjustment Provisions; Final Rule*, 69 Fed. Reg. 21704 (April 22, 2004), 1282 Off. Gaz. Pat. Office 100 (May 18, 2004).

Further, as stated in the *Explanation of 37 CFR 1.703(f) and of the United States Patent and Trademark Office Interpretation of 35 U.S.C. 154(b)(2)(A)*, the Office has consistently taken the position that if an application is entitled to an adjustment under the three-year pendency provision of 35 U.S.C. 154(b)(1)(B), the entire period during which the application was pending before the Office (except for periods excluded under 35 U.S.C. 154(b)(1)(B)(i)-(iii)), and not just the period beginning three years after the actual filing date of the application, is the relevant period under 35 U.S.C. 154(b)(1)(B) in determining whether periods of delay "overlap" under 35 U.S.C. 154(b)(2)(A).

This interpretation is consistent with the statute. Taken together the statute and rule provide that to the extent that periods of delay attributable to grounds specified in 35 U.S.C. 154(b)(1) and in corresponding §1.702 overlap, the period of adjustment granted shall not exceed the actual number of days the issuance of the patent was delayed.

In this instance, the relevant period under 35 U.S.C. 154(b)(1)(B) in determining whether periods of delay "overlap" under 35 U.S.C. 154(b)(1)(A) is the period during which the application was

---

[1] Likewise, 37 CFR 1.703(f) provides that:

> To the extent that periods of delay attributable to the grounds specified in §1.702 overlap, the period of adjustment granted under this section shall not exceed the actual number of days the issuance of the patent was delayed.

pending before the Office beginning on the application filing date under 35 U.S.C. 111(a), September 1, 2004, and ending on the date that the patent issued October 28, 2008 (not including any other periods excluded under 35 U.S.C. 154(b)(1)(B)(i)-(iii)).

Pursuant to 35 U.S.C. 154(b)(1)(A) and 37 CFR 1.702(a)(1), 303 days of patent term adjustment were accorded during the pendency of the application for Office delay prior to the issuance of the patent. Pursuant to 35 U.S.C. 154(b)(1)(B) and 37 CFR 1.702(b), 423 days of patent term adjustment accrued for Office issuance of the patent more than three years after the filing date of the application.

The 303 days of patent term adjustment under 37 CFR 1.702(a)(1) overlap with the 423 days of delay under 37 CFR 1.702(b). Accordingly, entry of both the 303 days and the 423 days is neither permitted nor warranted given that 423 days is the actual number of days issuance of the patent was delayed.

Accordingly, at issuance, the Office properly entered 423 days of patent term adjustment, having considered the 423 days of Office delay under the three-year pendency provision in conjunction with the 303 days of examination delay, and having reduced the adjustment 87 days for applicant's delay.

In view thereof, no adjustment of the patent term will be made.

The Office acknowledges submission of the $200.00 fee set forth in 37 CFR 1.18(e). No additional fees are required.

Telephone inquiries specific to this matter should be directed to the undersigned at (571) 272-3205.

Alesia M. Brown
Petitions Attorney
Office of Petitions

UNITED STATES PATENT AND TRADEMARK OFFICE

Commissioner for Patents
United States Patent and Trademark Office
P.O. Box 1450
Alexandria, VA 22313-1450
www.uspto.gov

Gregory E. Montone
ANTONELLI, TERRY, STOUT &
KRAUS, LLP
1300 North Seventeenth Street
Suite 1800
Arlington, VA 22209-3873

MAILED

DEC 16 2005

TECHNOLOGY CENTER 2100

In re Application of:
KAMADA et al
Application No. 10/930,765
Filed: September 1, 2004
For: DATA PROCESSING SYSTEM AND METHOD WITH DATA SHARING FOR THE SAME

DECISION ON PETITION TO MAKE SPECIAL

This is a decision on the petition, filed on August 3, 2005 under 37 C.F.R. §102(d) and M.P.E.P. § 708.02(VIII): Accelerated Examination, to make the above-identified application special.

The petition is **GRANTED**.

M.P.E.P. § 708.02, Section VIII which sets out the prerequisites for a grantable petition for Accelerated Examination under 37 C.F.R. § 102(d) states in relevant part:

> A new application (one which has not received any examination by the examiner) may be granted special status provided that applicant (and this term includes applicant's attorney or agent) complies with each of the following items:
>
> (A) Submits a petition to make special accompanied by the fee set forth in 37 CFR 1.17(h);
>
> (B) Presents all claims directed to a single invention, or if the Office determines that all the claims presented are not obviously directed to a single invention, will make an election without traverse as a prerequisite to the grant of special status;
>
> (C) Submits a statement(s) that a pre-examination search was made, listing the field of search by class and subclass, publication, Chemical Abstracts, foreign patents, etc. A search made by a foreign patent office satisfies this requirement;
>
> (D) Submits one copy each of the references deemed most closely related to the subject matter encompassed by the claims if said references are not already of record; and
>
> (E) Submits a detailed discussion of the references, which discussion points out, with the particularity required by 37 CFR 1.111 (b) and (c), how the claimed subject matter is patentable over the references.

Applicant's submission of August 3, 2005 meets all the criteria set out above. Accordingly, the petition is **GRANTED**. The application file is being forwarded to the Examiner for accelerated examination in accordance with M.P.E.P. § 708.02. If the application is subsequently allowed, it will be given priority for printing. See M.P.E.P. § 1309.

Vincent N. Trans
Special Program Examiner
Technology Center 2100
Computer Architecture, Software, and
Information Security
571-272-3613

P25885.P08

GREENBLUM & BERNSTEIN, P.L.C.
Intellectual Property Causes
1950 Roland Clarke Place
Reston, VA 20191
(703) 716-1191

Mail Stop AF

OIPE IAP56
APR 12 2007
PATENT & TRADEMARK OFFICE

Response under 37 C.F.R. 1.116
Expedited Procedure Requested
Examining Group. 3618
Attorney Docket No. P25885

In re application of : Bernard COUDERC

Application No. : 10/930,781 Group Art Unit: 3618

Filed : September 1, 2004 Examiner : John D. Walters

For : DEVICE FOR RETAINING A FOOT OR A BOOT ON A SPORTS APPARATUS

Mail Stop AF
Commissioner for Patents
U.S. Patent and Trademark Office
Customer Service Window, Mail Stop AF
Randolph Building
401 Dulany Street
Alexandria, VA 22314

Sir:
Transmitted herewith is a **Reply under 37 C.F.R. 1.116 to the Office Action of January 12, 2007 and Request for Withdrawal of Finality** in the above-captioned application.

____ Small Entity Status of this application under 37 C.F.R. 1.9 and 1.27 has been established by a previously filed statement.
_X_ A Request for Withdrawal of Premature Final Rejection.
____ A Request for Extension of Time.
____ No additional fee is required.

The fee has been calculated as shown below:

Claims After Amendment	No. Claims Previously Paid For	Present Extra	Small Entity		Other Than A Small Entity	
			Rate	Fee	Rate	Fee
Total Claims: 36	*22	14	x25=	$	x 50=	$ 700.00
Indep. Claims: 6	**3	3	x100=	$	x200=	$ 600.00
Multiple Dependent Claims Presented			+180=	$	+360=	$ 0.00
Extension Fees for ____ Month(s)				$		$ 0.00
* If less than 20, write 20 ** If less than 3, write 3			Total:	$	Total:	$1300.00

____ Please charge my Deposit Account No. 19-0089 in the amount of $_____.
_X_ A check in the amount of $1,300.00 to cover the filing fee is included.
_X_ The U.S. Patent and Trademark Office is hereby authorized to charge payment of the following fees associated with this communication or credit any overpayment to Deposit Account No. 19-0089.
  _X_ Any additional filing fees required under 37 C.F.R. 1.16.
  _X_ Any patent application processing fees under 37 C.F.R. 1.17, including any required extension of time fees in any concurrent or future reply requiring a petition for extension of time for its timely submission (37 C.F.R. 1.136(a)(3)).

James L. Rowland
Reg. No. 32,674

O I P E IAP56
APR 1 2 2007
PATENT & TRADEMARK OFFICE

PATENT APPLICATION
IN THE UNITED STATES PATENT AND TRADEMARK OFFICE

Applicant	:	Bernard COUDERC	Group Art Unit 3618
Appln. No.	:	10/930,781	Examiner John D. WALTERS
Docket No.	:	P25885	Confirmation No. 9028
Customer No.	:	07055	
Filed	:	September 1, 2004	
Title	:	DEVICE FOR RETAINING A FOOT OR A BOOT ON A SPORTS APPARATUS	

REQUEST FOR WITHDRAWAL OF PREMATURE FINAL REJECTION

U.S. Patent and Trademark Office
Customer Service Window, Mail Stop ***AF***
Randolph Building
401 Dulany Street
Alexandria, VA 22314

Sir:

Pursuant to the guidelines presented in the Manual of Patent Examining Procedure (MPEP), Section 706.07(d), Applicant kindly requests that the final rejection of January 12, 2007 be withdrawn as being premature.

Applicant's reasons for making the request are the following. If Applicant's request is not deemed persuasive, Applicant requests that this paper be considered a petition under 37 CFR §1.181 to invoke the supervisory authority of the Director of the USPTO, as set forth in MPEP §1002.02(c).

MPEP §706.07(a), entitled "Final Rejection, When Proper on Second Action," explains that "second or any subsequent actions on the merits shall be final, except where the examiner introduces a new ground of rejection that is neither necessitated by applicant's amendment of the claims nor based on information submitted in an information disclosure statement ...."

On page 6, lines 5-6 of the final rejection of January 12, 2007, the assertion is made that "Applicant's amendment necessitated the new ground(s) of rejection presented in the Office action. Accordingly, THIS ACTION IS MADE FINAL."

At least with regard to claim 1, Applicant's amendment (of October 31, 2006), Applicant's amendment did not necessitate a new ground of rejection.

The only amendment made to claim 1 was the substitution of the word "opposing" for the word "facing" in line 4, in the expression "a rear support element having a support surface opposing ~~facing~~ a free surface" (markings in the original).

To facilitate an understanding of the expression as applied to an exemplary embodiment, Applicant has placed parenthetical reference numerals (see Fig. 6, e.g.) in the expression as follows: "a rear support element (**40**) having a support surface (**47**) opposing a free surface (**48, 91**)."

As can be seen in Applicant's Fig. 6, the support surface 47 faces forwardly (toward the lower leg of the rider during use) and the free surface 48, 91 faces rearwardly. Thus, the two surfaces 47 and 48/91 face ***away*** from each other, i.e., they are ***opposing*** surfaces, rather than ***facing*** surfaces.

In the first Office action, to which Applicant responded on October 31, 2006, claims 1-10 were rejected over BOWLES. In the new Office action (of January 12, 2007) to which Applicant is responding concurrently herewith, claims 1-10 (and others) are newly rejected over FUMAGALLI.

However, Applicant submits that it was not his amendment to claim 1 (i.e., "opposing" for "facing") that necessitated the change in rejections. It is not the case that BOWLES discloses ***facing*** surfaces of the rear support element (previously recited), whereas FUMAGALLI discloses ***opposing*** surfaces which, thereby, required a new rejection. Instead, it would appear from the text of the first Office action, such as page 4, line7 (referring to the free surface of element 40 as substantially convex, which can only be the "free" (i.e., "rear") surface) of BOWLES snowboard binding, since page 3, lines 13-14 of the Office action identifies element 40 of BOWLES (i.e., the backplate/highback) as having the aforementioned support and free surfaces.

Accordingly, it would appear, the necessity of a new ground of rejection was required for reasons other than the "opposing" for "facing" amendment, such reasons, perhaps, relating to those presented on pages 12-14 of Applicant's amendment.

In fact, the disclosure of FUMAGALLI appears to be more relevant to Applicant's invention, but only with regard to issues that do not relate to facing or opposing surfaces of the rear support element.

Therefore, for the reasons presented above, withdrawal of the final rejection is requested.

Any fee required for timeliness and/or completeness of Applicant's request/petition can be charged to Deposit Account No. 19-0089.

Any comments or questions concerning this application can be directed to the undersigned at the below-listed telephone number, fax number, or email address.

Respectfully submitted,
Bernard COUDERC

James L. Rowland
Reg. No. 32,674

April 12, 2007

GREENBLUM & BERNSTEIN, P.L.C.
1950 Roland Clarke Place
Reston, VA 20191

703-716-1191 (telephone)
703-716-1180 (fax)
jrowland@gbpatent.com

UNITED STATES PATENT AND TRADEMARK OFFICE

UNITED STATES DEPARTMENT OF COMMERCE
United States Patent and Trademark Office
Address: COMMISSIONER FOR PATENTS
P.O. Box 1450
Alexandria, Virginia 22313-1450
www.uspto.gov

APPLICATION NO.	FILING DATE	FIRST NAMED INVENTOR	ATTORNEY DOCKET NO.	CONFIRMATION NO.
10/930,781	09/01/2004	Bernard Couderc	P25885	9028

7055 7590 02/08/2008
GREENBLUM & BERNSTEIN, P.L.C.
1950 ROLAND CLARKE PLACE
RESTON, VA 20191

EXAMINER
WALTERS, JOHN DANIEL

ART UNIT	PAPER NUMBER
3618	

NOTIFICATION DATE	DELIVERY MODE
02/08/2008	ELECTRONIC

Please find below and/or attached an Office communication concerning this application or proceeding.

The time period for reply, if any, is set in the attached communication.

Notice of the Office communication was sent electronically on above-indicated "Notification Date" to the following e-mail address(es):

gbpatent@gbpatent.com
pto@gbpatent.com

UNITED STATES PATENT AND TRADEMARK OFFICE

Commissioner for Patents
United States Patent and Trademark Office
P.O. Box 1450
Alexandria, VA 22313-1450
www.uspto.gov

MAILED
FROM DIRECTORS OFFICE

FEB 07 2008

TECHNOLOGY CENTER 3600

January 18, 2008

Greeenblum & Bernstein, P.L.C.
1950 Roland Clarke Place
Reston, VA 20191

In re Application of:	:	**DECISION ON PETITION**
Bernard Couderc	:	**REGARDING REQUEST TO**
Application No. 10/930,781	:	**WITHDRAW FINALITY**
Filed: September 1, 2004	:	**UNDER 37 CFR 1.181**

This is in response to the petition filed on April 12, 2007 under 37 CFR 1.181 requesting the withdrawal of the finality of the Office action mailed September 5, 2006 as being premature.

Applicant alleges that the Final rejection mailed January 12, 2007 was premature in accordance with the guidelines of MPEP 706.07(a) in that the applicant's amendment received October 31, 2006 did not "necessitate the new grounds of rejection" as made by the Examiner. Specifically, the amendments made to claim 1 were alleged by the Applicant to be minor and did not rise to a level that would necessitate the new grounds of rejection.

A review of the record reveals that since the filing of the petition, a telephonic interview was conducted on September 12, 2007. As a result, further consideration was given and a Notice of Allowance was mailed on September 21, 2007.

Therefore since the Examiner and Applicant agreed on allowable subject matter in the case, Applicant's arguments as to the premature finality are considered moot.

The petition is **DISMISSED as moot**.

Telephone inquiries should be directed to Chris Ellis, Supervisory Patent Examiner, at (571) 272-6914

Kathy Matecki
for Paul Dickson, Director
Patent Technology Center 3600
(571) 272-6669

CPE/snm: 01/18/08

SM

UNITED STATES PATENT AND TRADEMARK OFFICE

Commissioner for Patents
United States Patent and Trademark Office
P.O. Box 1450
Alexandria, VA 22313-1450
www.uspto.gov

COPY MAILED

DEC 03 2009

OFFICE OF PETITIONS

THEODORE J. BIELEN JR.
BIELEN, LAMPE, & THOEMING
1390 WILLOW PASS ROAD
SUITE 1020
CONCORD CA 94520

In re Application of

Joel M. Matta

Application No. 10/930,809

Filed: September 1, 2004

Attorney Docket No. 14650

DECISION ON PETITION

This is a decision on the petition under 37 CFR 1.137(b), filed September 14, 2009, to revive the above-identified application.

The petition is **GRANTED**[1].

The above-identified application became abandoned for failure to file a proper response to the final Office action mailed December 27, 2007. The final Office action set a shortened statutory period for reply of three months from its mailing date. A proper response was not filed within the allowable period and the application became abandoned on March 28, 2008. A Notice of Abandonment was mailed May 28, 2009.

The Request for Continued Examination and amendment filed April 27, 2009, is noted.

The application file is being forwarded to Technology Center 3700, GAU 3772 for further processing.

Telephone inquiries concerning this decision should be directed to the undersigned at (571) 272-3222.

Kenya A. McLaughlin
Petitions Attorney
Office of Petitions

[1] It is noted that since the final Office action mailed December 27, 2007, and the filing of the improper RCE on April 30, 2008, examination of the application continued even though the application was abandoned by operation of law. The examiner must determine what effect, if any, the abandonment of the application had on the examination that took place while the application was in an abandoned status.

UNITED STATES PATENT AND TRADEMARK OFFICE

UNITED STATES DEPARTMENT OF COMMERCE
United States Patent and Trademark Office
Address: COMMISSIONER FOR PATENTS
P.O. Box 1450
Alexandria, Virginia 22313-1450
www.uspto.gov

SMART & BIGGAR
438 UNIVERSITY AVENUE
SUITE 1500, BOX 111
TORONTO, ON M5G 2K8
CANADA

Mail Date: 06/28/2010

Applicant	: Wayne C. Louie	: DECISION ON REQUEST FOR
Patent Number	: 7636921	: RECALCULATION of PATENT
Issue Date	: 12/22/2009	: TERM ADJUSTMENT IN VIEW
Application No	: 10/930,826	: OF WYETH AND NOTICE OF INTENT TO
Filed	: 09/01/2004	: ISSUE CERTIFICATE OF CORRECTION
		:

The Request for Recalculation is **GRANTED** to the extent indicated.

The patent term adjustment has been determined to be **1121** days. The USPTO will *sua sponte* issue a certificate of correction reflecting the amount of PTA days determined by the recalculation.

Prior to the issuance of the certificate of correction, the USPTO will afford patentee an opportunity to be heard and request reconsideration. Accordingly, patentee has **one month or thirty (30) days**, whichever is longer, to file a request for reconsideration of this patent term adjustment calculation. See 35 U.S.C. 154(b)(3)(B)(ii) and 37 CFR 1.322(a)(4). No extensions of time will be granted under 37 CFR 1.136.

Patentee should use document code PET.OP if electronically filing a request for reconsideration of this patent term adjustment calculation. The patentee must also include the information required by 37 CFR 1.705(b)(2) and the fee required by 37 CFR 1.18(e). If patentee does not file a timely request for reconsideration of this patent term adjustment calculation including the information required by 37 CFR 1.705(b)(2) and the fee required by 37 CFR 1.18(e), the USPTO will issue a certificate of correction reflecting the PTA determination noted above.

Patentee should be aware that in order to preserve the right to review in the United States District Court for the District of Columbia of the USPTO patent term adjustment determination, patentee must ensure that he or she also take the steps required under 35 U.S.C. 154(b)(4)(A) in a timely manner. Nothing in the request for recalculation should be construed as providing an alternative time frame for commencing a civil action under 35 U.S.C. 154(b)(4)(A).

Any questions concerning this decision should be directed to the Office of Patent Legal Administration at 571-272-7702.

UNITED STATES PATENT AND TRADEMARK OFFICE

UNITED STATES DEPARTMENT OF COMMERCE
United States Patent and Trademark Office
Address: COMMISSIONER FOR PATENTS
P.O. Box 1450
Alexandria, Virginia 22313-1450
www.uspto.gov

APPLICATION NO.	FILING DATE	FIRST NAMED INVENTOR	ATTORNEY DOCKET NO.	CONFIRMATION NO.
10/930,832	09/01/2004	Yoshio Suzuki	843.44247X00	8006

20457 7590 10/30/2007
ANTONELLI, TERRY, STOUT & KRAUS, LLP
1300 NORTH SEVENTEENTH STREET
SUITE 1800
ARLINGTON, VA 22209-3873

EXAMINER
PATEL, JIGAR P

ART UNIT	PAPER NUMBER
4125	

MAIL DATE	DELIVERY MODE
10/30/2007	PAPER

Please find below and/or attached an Office communication concerning this application or proceeding.

The time period for reply, if any, is set in the attached communication.

UNITED STATES PATENT AND TRADEMARK OFFICE

Commissioner for Patents
United States Patent and Trademark Office
P.O. Box 1450
Alexandria, VA 22313-1450
www.uspto.gov

MAILED

OCT 3 0 2007

TECHNOLOGY CENTER 2100

GREGORY MONTONE
ANTONELLI, TERRY, STOUT & KRAUS, LLP
1300 NORTH SEVENTEENTH STREET
SUITE 1800
ARLINGTON, VA 22209-3873

In re Application of: SUZUKI, et al.
Application No. 10/930,832
Filed: September 1, 2004
For: DATA DUPLICATION METHOD IN A DISASTER RECOVERY SYSTEM

DECISION ON PETITION
TO MAKE SPECIAL
(ACCELERATED EXAMINATION)
UNDER M.P.E.P. §708.02 (VIII)

This is a decision on the petition to make special under 37 C.F.R. §102(d) and M.P.E.P. §708.02(VIII): Accelerated Examination, filed on November 10, 2005. The delay in responding to the instant petition is regretted.

The Petition is **GRANTED**.

M.P.E.P. §708.02, Section VIII which sets out the prerequisites for a grantable petition for Accelerated Examination under 37 C.F.R. §1.102(d) states in relevant part:

A new application (one which has not received any examination by the examiner) may be granted special status provided that applicant (and this term includes applicant's attorney or agent) complies with each of the following items:

(a) Submits a petition to make special accompanied by the fee set forth in 37 CFR 1.17(h);

(b) Presents all claims directed to a single invention, or if the Office determines that all the claims presented are not obviously directed to a single invention, will make an election without traverse as a prerequisite to the grant of special status;

(c) Submits a statement(s) that a pre-examination search was made, listing the field of search by class and subclass, publication, Chemical Abstracts, foreign patents, etc. The pre-examination search must be directed to the invention as claimed in the application for which special status is requested. A search made by a foreign patent office satisfies this requirement;

(d) Submits one copy each of the references deemed most closely related to the subject matter encompassed by the claims if said references are not already of record; and

(e) Submits a detailed discussion of the references, which discussion points out, with the particularity required by 37 CFR 1.111 (b) and (c), how the claimed subject matter is patentable over the references.

Petition to Make Special **GRANTED** since all of the requirements for special status under MPEP §708.02(VIII) have been met.

The application file is being forwarded to the Examiner for accelerated examination in accordance with M.P.E.P. §708.02, Section VIII. If the application is subsequently allowed, it will be given priority for printing. See M.P.E.P. §1309.

Brian L. Johnson
Quality Assurance Specialist
Technology Center 2100
Computer Architecture, Software and Information Security
571-272-3595

SPE RESPONSE FOR CERTIFICATE OF CORRECTION

Paper No.: _____

DATE : 01/05/09

TO SPE OF : ART UNIT 2195

SUBJECT : Request for Certificate of Correction for Appl. No.: 10930848 Patent No.: 7631310

Please respond to this request for a certificate of correction within 7 days.

FOR IFW FILES:

Please review the requested changes/corrections as shown in the **COCIN** document(s) in the IFW application image. No new matter should be introduced, nor should the scope or meaning of the claims be changed.

Please complete the response (see below) and forward the completed response to scanning using document code **COCX**.

FOR PAPER FILES:

Please review the requested changes/corrections as shown in the attached certificate of correction. Please complete this form (see below) and forward it with the file to:

Certificates of Correction Branch (C of C)
Randolph Square 9D40-D
Palm Location 7580
You can fax the Directors/SPE response to 571-270-9990

Lamonte Newsome
Certificates of Correction Branch
703-756-1574

Thank You For Your Assistance

The request for issuing the above-identified correction(s) is hereby:
Note your decision on the appropriate box.

XApproved	**All** changes apply.
☐ **Approved in Part**	Specify below which changes **do not** apply.
☐ **Denied**	State the reasons for denial below.

Comments: _____

SPE RESPONSE FOR CERTIFICATE OF CORRECTION

/Meng-Ai An/ 2195

SPE Art Unit

UNITED STATES PATENT AND TRADEMARK OFFICE

COMMISSIONER FOR PATENTS
UNITED STATES PATENT AND TRADEMARK OFFICE
P.O. BOX 1450
ALEXANDRIA, VA 22313-1450
www.uspto.gov

Paper No. _____

Date : August 11, 2005

TO : Director, Office of Patent Publication

FROM : Office of the Deputy Commissioner
for Patent Examination Policy

SUBJECT : Withdrawal from Issue of

Applicant(s) :Mitsuo Takatsuka
Application No. :10/930,859
Filed :September 1, 2004

The above-identified application has been assigned Patent No. 6,929,129 and an issue date of August 16, 2005.

It is hereby directed that this application be withdrawn from issue at the request of the applicant.

Do not refund the issue fee.

The following erratum should be published in the Official Gazette if the above-identified application is published in the OG of August 16, 2005:

"All reference to Patent No. 6,929,129 to Mitsuo Takatsuka of Japan for SELF-CLEANING MECHANICAL FILTER appearing in the Official Gazette of August 16, 2005 should be deleted since no patent was granted."

Karen Creasy

Karen Creasy
Petitions Examiner
Office of Petitions
Office of the Deputy Commissioner
for Patent Examination Policy

cc: Paul Harrison, MDW-4B03,(FAX-273-5468)
Deneise Boyd, MDE-3D39 (FAX-273-5124)
Mary Louise McAskill, ST-8C15 (FAX 305-4372)
Niomi Farmer, ST-8C14 (FAX-305-4372)
Mary E. Johnson (Cookie), MDE-7C71 (FAX 273-0038
Duane Davis P/OPC MDE-7D89
Tamara Greene, ST-8C13

UNITED STATES PATENT AND TRADEMARK OFFICE

Commissioner for Patents
United States Patent and Trademark Office
P.O. Box 1450
Alexandria, VA 22313-1450
www.uspto.gov

OLIFF & BERRIDGE
P.O. BOX 19928
ALEXANDRIA VA 22320

COPY MAILED

AUG 11 2005

OFFICE OF PETITIONS
ON PETITION

In re Application of :
Mitsuo Takatsuka :
Application No. 10/930,859 :
Filed: September 1, 2004 :
Attorney Docket No. 120947 :

This is a decision on the petition, filed August 10, 2005, under 37 CFR 1.313(c)(2) to withdraw the above-identified application from issue after payment of the issue fee.

The petition is **GRANTED**.

The above-identified application is withdrawn from issue for consideration of a submission under 37 CFR 1.114 (request for continued examination). See 37 CFR 1.313(c)(2).

Petitioner is advised that the issue fee paid on June 7, 2005 in the above-identified application cannot be refunded. If, however, the above-identified application is again allowed, petitioner may request that it be applied towards the issue fee required by the new Notice of Allowance.[1]

Telephone inquiries should be directed to the undersigned at (571) 272-3208.

The examiner of Technology Center AU 1724 will consider the request for continued examination under 37 CFR 1.114.

Karen Creasy

Karen Creasy
Petitions Examiner
Office of Petitions
Office of the Deputy Commissioner
for Patent Examination Policy

---

[1] The request to apply the issue fee to the new Notice may be satisfied by completing and returning the new Issue Fee Transmittal Form PTOL-85(b), which includes the following language thereon: "Commissioner for Patents is requested to apply the Issue Fee and Publication Fee (if any) or re-apply any previously paid issue fee to the application identified above." Petitioner is advised that, whether a fee is indicated as being due or not, the Issue Fee Transmittal Form **must** be completed and timely submitted to avoid abandonment. Note the language in bold text on the first page of the Notice of Allowance and Fee(s) Due (PTOL-85).

UNITED STATES PATENT AND TRADEMARK OFFICE

Commissioner for Patents
United States Patent and Trademark Office
P.O. Box 1450
Alexandria, VA 22313-1450
www.uspto.gov

MATTINGLY, STANGER, MALUR &
BRUNDIDGE, P.C.
1800 Diagonal Road
Suite 370
Alexandria, VA 22314

MAILED

DEC 16 2005

TECHNOLOGY CENTER 2100

In re Application of:
Hidehisa SHITOMI et al.
Application No. 10/930,869
Filed: September 1, 2004
For: SYSTEM AND METHOD FOR DATA RECOVERY IN A STORAGE SYSTEM

DECISION ON PETITION TO MAKE SPECIAL

This is a decision on the petitions, filed on June 14, 2005 under 37 C.F.R. §102(d) and M.P.E.P. § 708.02(VIII): Accelerated Examination, to make the above-identified application special.

The petition is **GRANTED**.

M.P.E.P. § 708.02, Section VIII which sets out the prerequisites for a grantable petition for Accelerated Examination under 37 C.F.R. § 102(d) states in relevant part:

> A new application (one which has not received any examination by the examiner) may be granted special status provided that applicant (and this term includes applicant's attorney or agent) complies with each of the following items:
>
> (A) Submits a petition to make special accompanied by the fee set forth in 37 CFR 1.17(h);
>
> (B) Presents all claims directed to a single invention, or if the Office determines that all the claims presented are not obviously directed to a single invention, will make an election without traverse as a prerequisite to the grant of special status;
>
> (C) Submits a statement(s) that a pre-examination search was made, listing the field of search by class and subclass, publication, Chemical Abstracts, foreign patents, etc. A search made by a foreign patent office satisfies this requirement;
>
> (D) Submits one copy each of the references deemed most closely related to the subject matter encompassed by the claims if said references are not already of record; and
>
> (E) Submits a detailed discussion of the references, which discussion points out, with the particularity required by 37 CFR 1.111 (b) and (c), how the claimed subject matter is patentable over the references.

Applicant's submission of June 14, 2005 meets all the criteria set out above. Accordingly, the petition is **GRANTED**. The application file is being forwarded to the Examiner for accelerated examination in accordance with M.P.E.P. § 708.02. If the application is subsequently allowed, it will be given priority for printing. See M.P.E.P. § 1309.

Vincent N. Trans
Special Program Examiner
Technology Center 2100
Computer Architecture, Software, and
Information Security
571-272-3613

UNITED STATES PATENT AND TRADEMARK OFFICE

Commissioner for Patents
United States Patent and Trademark Office
P.O. Box 1450
Alexandria, VA 22313-1450
www.uspto.gov

6/9/08

Patent No. : 7205576
Ser. No. : 10930915
Inventor(s) : June-0 Song et al.
Issued : 4/17/07
Title : LIGHT EMITTING DEVICE AND METHOD OF MAUFACTURING THE SAME
Docket No. :

Re: Request for Certificate of Correction

Consideration has been given your request for the issuance of a certificate of correction for the above-identified patent under the provisions of Rule(s) 1.322 and/or 1.323.

Assignees' names and addresses (assignment data) printed in a patent, are based *solely* on information supplied in the appropriate space for identifying the assignment data, i.e., item 3 of the Issue Fee Transmittal Form PTOL-85B. Granting of a request under 37 CFR 3.81(b) is required to correct applicant's error providing ***incorrect or erroneous*** assignment data, *before* issuance of a Certificate of Correction, under 37 CFR 1.323 *(see Manual of Patent Examining Procedures (M.P.E.P) Chp.1400, sect. 1481).* This procedure is required *at any time after the issue fee is paid*, including after issuance of the patent.

In view of the foregoing, your request, in this mater, is hereby denied.

A request to correct the Assignee under 37 CFR 3.81(b) should include:

A. **the processing fee set forth in 37 CFR 1.117(h) (currently $130);**
B. a statement that the failure to include the correct assignee name on the PTOL-85B was inadvertent; and
C. a copy of the Notice of Recordation of Assignment Document, reflecting the reel and frame number where the assignment(s) is recorded and/or reflecting proof of *the date* the assignment was submitted for recordation.

In the Request, Applicant(s) may request that the file be forwarded to Certificates of Correction Branch, for issuance of a Certificate of Correction, if the Request is granted.

Any request under 37 CFR 3.81(b) should be directed to the following address or facsimile number:

By mail: Mail Stop PETITIONS
Commissioner for Patents
Post Office Box 1450
Alexandria, VA 22313-1450

By hand: Customer Service Window
Mail Stop Petitions
Randolph Building
401 Dulany Street
Alexandria, VA 22314

By fax: (703) 872-9306
ATTN: Office of Petitions

If a fee (currently $100) was previously submitted for consideration of a Request for Certificate of Correction, under CFR 1.323, to correct assignment data, , no additional fee is required.

A certificate of correction will be issued to correct the remaining errors noted in your request.

Henry Randall
For Cecelia Newman
Decisions & Certificates
of Correction Branch
(703) 308-9390 Ext. 108

Buchanan Ingersoll & Rooney PC
P.O. Box 1404
Alexandria, VA 22131

HR

UNITED STATES PATENT AND TRADEMARK OFFICE

Commissioner for Patents
United States Patent and Trademark Office
P.O. Box 1450
Alexandria, VA 22313-1450
www.uspto.gov

BUCHANAN, INGERSOLL & ROONEY PC
POST OFFICE BOX 1404
ALEXANDRIA VA 22313-1404

MAILED

MAR 08 2010

OFFICE OF PETITIONS

In re Patent No. 7,205,576 :
Issue Date: April 17, 2007 :
Application No. 10/930,915 : DECISION ON PETITION
Filed: September 1, 2004 :
Attorney Docket No. 030681-699 :

This is a decision on the Petition Under 37 CFR 1.183, filed October 14, 2008, requesting correction on the Title Page of the subject patent, via issuance of a Certificate of Correction under 37 CFR 1.323, to identify the correct assignees. A completed Certificate of Correction Form (PTO/SB/44) was submitted with the petition.

The petition under 37 CFR 3.81 is **GRANTED**.

Petitioner urges that the present Petition was submitted to permit the failure to include the correct assignee names on the previously submitted PTOL-85B. Accordingly, petitioner requests, in effect, that the Title Page of the above-identified patent be corrected, via issuance of a Certificate of Correction (PTO/SB/44), to correct the assignee names identified thereon from:

"Samsung Electronics Co., Ltd."

to:

-Samsung Electronics Co., Ltd.
Suwon-si, Gyeonggi-do (KR) and
Gwangju Institute of Science and Technology
Buk-gu, Gwangju-shi (KR)-

37 CFR 3.81(b), effective June 25, 2004, reads:

> *After payment of the issue fee:* Any request for issuance of an application in the name of the assignee submitted after the date of payment of the issue fee, and any request for a patent to be corrected to state the name of the assignee, must state that the assignment was submitted for recordation as set forth in § 3.11 before issuance of the patent, and must include a request for a certificate of

> correction under § 1.323 of this chapter (accompanied by the fee set forth in § 1.20(a) and the processing fee set forth in § 1.17(i) of this chapter.

The requisite $100.00 fee (Fee Code 1811) as set forth under 37 CFR 1.20(a) has previously been submitted. However, the petition was accompanied deposit account authorization to charge any required fees. As such, the requisite $130.00 processing fee (Fee Code 1464), as set forth under 37 CFR 1.17(i), have been charged as authorized. Further, Office assignment records are consistent with the requested correction. Accordingly, since the Petition complies with the provisions of 37 CFR 3.81(b), it is appropriate for the Office to issue a Certificate of Correction in accordance with the content of the Form PTO/SB/44 that was submitted with petition.

Inquiries related this communication should be directed to Cheryl Gibson-Baylor at (571)272-3213.

Any questions concerning the issuance of a Certificate of Correction should be directed to the Certificates of Correction Branch at (571) 272-4200.

This matter is being referred to the Certificates of Correction Branch for processing of a Certificate of Correction in U.S. Patent No. 7,205,576.

Brian W. Brown
Petitions Examiner
Office of Petitions

UNITED STATES PATENT AND TRADEMARK OFFICE

COMMISSIONER FOR PATENTS
UNITED STATES PATENT AND TRADEMARK OFFICE
P.O. BOX 1450
ALEXANDRIA, VA 22313-1450
www.uspto.gov

DEC 10 2004

In re Application of	:	
Joel S. Marks	:	
Serial No. 10/930,919	:	DECISION ON PETITION
Filed: August 31, 2004	:	TO MAKE SPECIAL
For: LARGE SELF-FORMING SOCKET	:	

Applicant's petition, filed August 31, 2004, seeks to have this application made special pursuant to the Accelerated Examination Program. The petition is GRANTED.

The petition has been reviewed and is found to be in compliance with the requirements for special status as set forth in Section 708.02(VIII) of the Manual of Patent Examining Procedures (MPEP).

Applicant is advised that the examiner's search will be restricted to the subject matter encompassed by the claims. In the event that the application receives a first action rejection, applicant is encouraged to arrange for an interview with the examiner, and to provide the examiner with a working copy of any proposed amendment one working day prior to the interview. Any amendment filed in response to a first action rejection which would require broadening of the field of search will be treated as an improper response.

PETITION GRANTED.

E. Rollins-Cross, Director
Technology Center 3700

Paul Y. Feng
Fulwider Patton Lee & Utecht, LLP
6060 Center Drive, 10th Floor
Los Angeles, CA 90045

SPE RESPONSE FOR CERTIFICATE OF CORRECTION

Paper No.: _____

DATE : November 29, 2005

TO SPE OF : ART UNIT 3723

SUBJECT : Request for Certificate of Correction on Patent No.: 6,928,906

A response is requested with respect to the accompanying request for a certificate of correction.

Please complete this form and return with file, within **7** days to:
Palm location **7580, Certificates of Correction Branch – South Tower – 9A22**
If response is for an IFW, **return to employee (named below) via PUBSCofC Team in MADRAS.**
With respect to the change(s) requested, correcting Office and/or Applicant's errors, should the patent read as shown in the certificate of correction (COCIN)? No new matter should be introduced, nor should the scope or meaning of the claims be changed.

Magdalene Talley

Thank You For Your Assistance

Certificates of Correction Branch
Tel. No. 703-308-9309 ext. 116

The request for issuing the above-identified correction(s) is hereby:
Note your decision on the appropriate box.

- ☑ **Approved** — **All** changes apply.
- ☐ **Approved in Part** — Specify below which changes **do not** apply.
- ☐ **Denied** — State the reasons for denial below.

Comments:

– the inventorship should be amended to include Stephen Quick, per office action of 08/12/05
– the description for Fig 17A should also be entered Col. 4, line 33

SPE **Art Unit** 3723

SPE RESPONSE FOR CERTIFICATE OF CORRECTION

Paper No.: _____

DATE : November 29, 2005

TO SPE OF : ART UNIT 3723

SUBJECT : Request for Certificate of Correction on Patent No.: 6,928,906 10/930919

A response is requested with respect to the accompanying request for a certificate of correction.

Please complete this form and return with file, within 7 days to:
Palm location **7580, Certificates of Correction Branch – South Tower – 9A22**
If response is for an IFW, **return to employee (named below) via PUBSCofC Team in MADRAS.**
With respect to the change(s) requested, correcting Office and/or Applicant's errors, should the patent read as shown in the certificate of correction (COCIN)? No new matter should be introduced, nor should the scope or meaning of the claims be changed.

Magdalene Talley

Thank You For Your Assistance

Certificates of Correction Branch
Tel. No. 703-308-9309 ext. 116

The request for issuing the above-identified correction(s) is hereby:
Note your decision on the appropriate box.

- ☒ **Approved** — All changes apply.
- ☐ **Approved in Part** — Specify below which changes **do not** apply.
- ☐ **Denied** — State the reasons for denial below.

Comments:

SPE

3723
Art Unit

PTOL-306 (REV. 7/03)

U.S. DEPARTMENT OF COMMERCE Patent and Trademark Office

UNITED STATES PATENT AND TRADEMARK OFFICE

Commissioner for Patents
United States Patent and Trademark Office
P.O. Box 1450
Alexandria, VA 22313-1450
www.uspto.gov

JUL 28 2005

In re Application of:	:	
Michael S. Powell	:	
Application No. 10/930,928	:	DECISION ON PETITION
Filed: August 31, 2004	:	
For: RADIAL ARM SAW SAFETY TOP	:	

This is a decision on the petition to make special filed October 25, 2004. The petition is submitted pursuant to the practice established in MPEP §708.02(I) "Manufacture." The $130.00 petition fee has been received.

The petition is granted.

A review of the petition shows that petitioner has satisfied all of the requirements of the above cited MPEP section. Accordingly, the examiner will treat this application as special throughout its prosecution. Prior to the first action on the merits, the examiner will conduct a rigorous search for potentially interfering applications. The interference search will be brought up to date prior to each successive action.

The Supervisory Patent Examiner of Patent Examining Art Unit 3724 will be notified of this decision, and will inform the assigned examiner to take action not inconsistent with this decision.

PETITION GRANTED.

Frederick R. Schmidt

Frederick R. Schmidt, Director
Technology Center 3700

Mark D. Bowen, Esq.
Stearns Weaver Miller Meissler
Alhadeff & Sitterson, PA
200 East Broward Blvd., Suite 1900
Fort Lauderdale, FL 33301

UNITED STATES PATENT AND TRADEMARK OFFICE

Commissioner for Patents
United States Patent and Trademark Office
P.O. Box 1450
Alexandria, VA 22313-1450
www.uspto.gov

IPSG, P.C.
P.O. BOX 700640
SAN JOSE, CA 95170-0640

COPY MAILED
NOV 0 9 2006
OFFICE OF PETITIONS

In re Application of	:	
RASHID, et al.	:	
Application No. 10/930,937	:	DECISION ON PETITION
Filed: August 31, 2004	:	TO WITHDRAW
Attorney Docket No. RZMI-P115	:	FROM RECORD
	:	

This is a decision on the Request to Withdraw as attorney or agent of record under 37 C.F.R. § 1.36(b), filed August 01, 2006.

The request is **NOT APPROVED**.

A grantable request to withdraw as attorney/agent of record must be signed by every attorney/agent seeking to withdraw or contain a clear indication that one attorney is signing on behalf of another/others. A request to withdraw will not be approved unless at least 30 (thirty) days would remain between the date of approval and the later of the expiration date of a time to file a response or the expiration date of the maximum time period which can be extended under 37 C.F.R. § 1.136(a).

The Office cannot approve the request at this time. In order to request or take action in a patent matter, the assignee must establish its ownership of the patent to the satisfaction of the Director. In this regard, a Statement under 37 CFR 3.73(b) must have either: (i) documentary evidence of a chain of title from the original owner to the assignee (*e.g.*, copy of an executed assignment), and a statement affirming that the documentary evidence of the chain of title from the original owner to the assignee was or concurrently is being submitted for recordation pursuant to § 3.11; or (ii) a statement specifying where documentary evidence of a chain of title from the original owner to the assignee is recorded in the assignment records of the Office (*e.g.*, reel and frame number). The power of attorney filed on August 31, 2004 does not include one of the above two options.

All future communications from the Office will continue to be directed to the above-listed address until otherwise properly notified by applicant.

There is no outstanding Office action that requires a reply from the applicant.

Telephone inquiries concerning this decision should be directed to Patricia Volpe at 571-272-6825.

Patricia Volpe
Petitions Examiner
Office of Petitions

cc: Raza Microelectronics, Inc.
Legal Department
18920 Forge Drive
Cupertino, CA 95014-0701

UNITED STATES PATENT AND TRADEMARK OFFICE

Commissioner for Patents
United States Patent and Trademark Office
P.O. Box 1450
Alexandria, VA 22313-1450
www.uspto.gov

IPSG, P.C.
P.O. BOX 700640
SAN JOSE CA 95170-0640

COPY MAILED

FEB 21 2007

OFFICE OF PETITIONS

In re Application of
Abbas Rashid, et al.
Application No. 10/930,938
Filed: August 31, 2004
Attorney Docket No. RZMI-P107

DECISION ON PETITION
TO WITHDRAW
FROM RECORD

This is a decision on the Request to Withdraw as attorney or agent of record under 37 C.F.R. § 1.36(b) filed August 1, 2006.

The request is **NOT APPROVED**.

A grantable request to withdraw as attorney/agent of record must be signed by every attorney/agent seeking to withdraw or contain a clear indication that one attorney is signing on behalf of another/others. A request to withdraw will not be approved unless at least 30 (thirty) days would remain between the date of approval and the later of the expiration date of a time to file a response or the expiration date of the maximum time period which can be extended under 37 C.F.R. § 1.136(a).

The Office cannot approve the request at this time since the reasons provided do not meet any of the conditions under the mandatory or permissive categories enumerated in 37 CFR 10.40. Section 10.40 of Title 37 of the Code of Federal Regulation states, "[a] practitioner shall not withdraw from employment in a proceeding before the Office without permission from the Office[.]" More specifically, 37 CFR 10.40 states, "[i]f paragraph (b) of this section is not applicable, a practitioner may not request permission to withdraw in matter pending before the Office unless such request or such withdrawal is" for one the permissive reasons listed in 37 CFR 10.40(c). The reasons set forth in the request, "the assignee wishes to terminate representation by myself and the attorneys/agents associated with this application", does not meet any the conditions set forth in 37 CFR 10.40.

In order to request or take action in a patent matter, the assignee must establish its ownership of the patent to the satisfaction of the Director. In this regard, a Statement under 37 CFR 3.73(b) must have either: (i) documentary evidence of a chain of title from the original owner to the assignee (*e.g.*, copy of an executed assignment), and a statement affirming that the documentary

evidence of the chain of title from the original owner to the assignee was or concurrently is being submitted for recordation pursuant to § 3.11; or (ii) a statement specifying where documentary evidence of a chain of title from the original owner to the assignee is recorded in the assignment records of the Office (*e.g.*, reel and frame number). The power of attorney filed on December 5, 2006 does not include one of the above two options.

There is an outstanding Office action mailed February 2, 2007 that requires a reply by the applicant.

All future communications from the Office will continue to be directed to the above-listed address until otherwise notified by applicant.

Telephone inquiries concerning this decision should be directed to undersigned at 571-272-1642.

April M. Wise
Petitions Examiner
Office of Petitions

cc: RAZA MICROELECTRONICS, INC.
LEGAL DEPARTMENT
18920 FORGE DRIVE
CUPERTINO, CA 95014-0701

UNITED STATES PATENT AND TRADEMARK OFFICE

Commissioner for Patents
United States Patent and Trademark Office
P.O. Box 1450
Alexandria, VA 22313-1450
www.uspto.gov

COPY MAILED

FEB 21 2007

OFFICE OF PETITIONS

IPSG, P.C.
P.O. BOX 700640
SAN JOSE CA 95170-0640

In re Application of	:	
Abbas Rashid, et al.	:	
Application No. 10/930,939	:	DECISION ON PETITION
Filed: August 31, 2004	:	TO WITHDRAW
Attorney Docket No. RZMI-P112	:	FROM RECORD
	:	

This is a decision on the Request to Withdraw as attorney or agent of record under 37 C.F.R. § 1.36(b) filed August 1, 22006.

The request is **NOT APPROVED**.

A grantable request to withdraw as attorney/agent of record must be signed by every attorney/agent seeking to withdraw or contain a clear indication that one attorney is signing on behalf of another/others. A request to withdraw will not be approved unless at least 30 (thirty) days would remain between the date of approval and the later of the expiration date of a time to file a response or the expiration date of the maximum time period which can be extended under 37 C.F.R. § 1.136(a).

The Office cannot approve the request at this time since the reasons provided do not meet any of the conditions under the mandatory or permissive categories enumerated in 37 CFR 10.40. Section 10.40 of Title 37 of the Code of Federal Regulation states, "[a] practitioner shall not withdraw from employment in a proceeding before the Office without permission from the Office[.]" More specifically, 37 CFR 10.40 states, "[i]f paragraph (b) of this section is not applicable, a practitioner may not request permission to withdraw in matter pending before the Office unless such request or such withdrawal is" for one the permissive reasons listed in 37 CFR 10.40(c). The reasons set forth in the request, "the assignee wishes to terminate representation by myself and the attorneys/agents associated with this application", does not meet any the conditions set forth in 37 CFR 10.40.

In order to request or take action in a patent matter, the assignee must establish its ownership of the patent to the satisfaction of the Director. In this regard, a Statement under 37 CFR 3.73(b) must have either: (i) documentary evidence of a chain of title from the original owner to the assignee (*e.g.*, copy of an executed assignment), and a statement affirming that the documentary

evidence of the chain of title from the original owner to the assignee was or concurrently is being submitted for recordation pursuant to § 3.11; or (ii) a statement specifying where documentary evidence of a chain of title from the original owner to the assignee is recorded in the assignment records of the Office (*e.g.*, reel and frame number). The power of attorney filed on December 5, 2006 does not include one of the above two options.

All future communications from the Office will continue to be directed to the above-listed address until otherwise notified by applicant.

Telephone inquiries concerning this decision should be directed to undersigned at 571-272-1642.

April M. Wise
Petitions Examiner
Office of Petitions

cc: RAZA MICROELECTRONICS, INC.
LEGAL DEPARTMENT
18920 FORGE DRIVE
CUPERTINO, CA 95014-0701

UNITED STATES PATENT AND TRADEMARK OFFICE

Commissioner for Patents
United States Patent and Trademark Office
P.O. Box 1450
Alexandria, VA 22313-1450
www.uspto.gov

H.C. PARK & ASSOCIATES, PLC
8500 LEESBURG PIKE
SUITE 7500
VIENNA VA 22182

COPY MAILED

SEP 0 4 2008

OFFICE OF PETITIONS

In re Application of :
Jae-Seok JEONG :
Application No. 10/930,944 :
Filed: September 01, 2004 :
Attorney Docket No. **6161.0372.US** :

DECISION ON PETITION

This is a decision on the petition under the unintentional provisions of 37 CFR 1.137(b), filed July 07, 2008, to revive the above-identified application.

The petition is **GRANTED**.

The application became abandoned for failure to timely file a reply within the meaning of 37 CFR 1.113 to the final Office action of November 19, 2007. The proposed reply required for consideration of a petition to revive must be a Notice of Appeal (and appeal fee required by 37 CFR 41.20(b)(2), an amendment that *prima facie* places the application in condition for allowance, a Request for Continued Examination and submission (37 CFR 1.114), or the filing of a continuing application under 37 CFR 1.53(b). See MPEP 711.03(c)(III)(A)(2). No extensions of time pursuant to the provisions of 37 CFR 1.136(a) were obtained. Accordingly, the date of abandonment of this application is February 20, 2008.

The petition satisfies the requirements of 37 CFR 1.137(b) in that petitioner has supplied (1) the reply in the form of a Request for Continued Examination (RCE) and fee of $810, and the submission required by 37 CFR 1.114; (2) the petition fee of $1540; and (3) a proper statement of unintentional delay. Accordingly, the reply to the final Office Action of November 19, 2007 is accepted as having been unintentionally delayed.

Telephone inquiries concerning this decision should be directed to Tredelle Jackson at (571) 272-2783.

This application is being referred to Technology Center AU 2629 for processing of the RCE and for appropriate action by the Examiner in the normal course of business on the amendment submitted in accordance with 37 CFR 1.114.

Ramesh Krishnamurthy

Ramesh Krishnamurthy
Petitions Examiner
Office of Petitions

PTO/SB/64 (01-08)
Approved for use through 06/30/2008. OMB 0651-0031
U.S. Patent and Trademark Office; U.S. DEPARTMENT OF COMMERCE
Under the Paperwork Reduction Act of 1995, no persons are required to respond to a collection of information unless it displays a valid OMB control number.

PETITION FOR REVIVAL OF AN APPLICATION FOR PATENT ABANDONED UNINTENTIONALLY UNDER 37 CFR 1.137(b)

Docket Number (Optional) 6161.0372.US

First named inventor: Jae-Seok JEONG

Application No.: 10/930,944 Art Unit: 2629

Filed: September 1, 2004 Examiner: HOLTON, Steven E.

Title: METHOD FOR CONTROLLING ADDRESS POWER ON PLASMA DISPLAY PANEL AND APPARATUS THEREOF

Attention: Office of Petitions
Mail Stop Petition
Commissioner for Patents
P.O. Box 1450
Alexandria, VA 22313-1450
FAX (571) 273-8300

NOTE: If information or assistance is needed in completing this form, please contact Petitions Information at (571) 272-3282.

The above-identified application became abandoned for failure to file a timely and proper reply to a notice or action by the United States Patent and Trademark Office. The date of abandonment is the day after the expiration date of the period set for reply in the office notice or action plus an extensions of time actually obtained.

APPLICANT HEREBY PETITIONS FOR REVIVAL OF THIS APPLICATION

NOTE: A grantable petition requires the following items:
(1) Petition fee;
(2) Reply and/or issue fee;
(3) Terminal disclaimer with disclaimer fee - required for all utility and plant applications filed before June 8, 1995; and for all design applications; and
(4) Statement that the entire delay was unintentional.

1. Petition fee
☐ Small entity-fee $ _____ (37 CFR 1.17(m)). Applicant claims small entity status. See 37 CFR 1.27.
☒ Other than small entity – fee $ $1540.00 (37 CFR 1.17(m))

2. Reply and/or fee
A. The reply and/or fee to the above-noted Office action in the form of RCE and Amendment (identify type of reply):
☐ has been filed previously on _____.
☒ is enclosed herewith.

B. The issue fee and publication fee (if applicable) of $ _____.
☐ has been paid previously on _____.
☐ is enclosed herewith.

This collection of information is required by 37 CFR 1.137(b). The information is required to obtain or retain a benefit by the public which is to file (and by the USPTO to process) an application. Confidentiality is governed by 35 U.S.C. 122 and 37 CFR 1.11 and 1.14. This collection is estimated to take 1.0 hour to complete, including gathering, preparing, and submitting the completed application form to the USPTO. Time will vary depending upon the individual case. Any comments on the amount of time you require to complete this form and/or suggestions for reducing this burden, should be sent to the Chief Information Officer, U.S. Patent and Trademark Office, U.S. Department of Commerce, P.O. Box 1450, Alexandria, VA 22313-1450. DO NOT SEND FEES OR COMPLETED FORMS TO THIS ADDRESS. **SEND TO: Mail Stop Petition, Commissioner for Patents, P.O. Box 1450, Alexandria, VA 22313-1450.**

If you need assistance in completing the form, call 1-800-PTO-9199 and select option 2.

Under the Paperwork Reduction Act of 1995, no persons are required to respond to a collection of information unless it displays a valid OMB control number.

3. Terminal disclaimer with disclaimer fee

[X] Since this utility/plant application was filed on or after June 8, 1995, no terminal disclaimer is required.

[ ] A terminal disclaimer (and disclaimer fee (37 CFR 1.20(d)) of $ _____ for a small entity or $ _____ for other than a small entity) disclaiming the required period of time is enclosed herewith (see PTO/SB/63).

4. STATEMENT: The entire delay in filing the required reply from the due date for the required reply until the filing of a grantable petition under 37 CFR 1.137(b) was unintentional. [NOTE: The United States Patent and Trademark Office may require additional information if there is a question as to whether either the abandonment or the delay in filing a petition under 37 CFR 1.137(b) was unintentional (MPEP 711.03(c), subsections (III)(C) and (D)).]

WARNING:

Petitioner/applicant is cautioned to avoid submitting personal information in documents filed in a patent application that may contribute to identity theft. Personal information such as social security numbers, bank account numbers, or credit card numbers (other than a check or credit card authorization form PTO-2038 submitted for payment purposes) is never required by the USPTO to support a petition or an application. If this type of personal information is included in documents submitted to the USPTO, petitioners/applicants should consider redacting such personal information from the documents before submitting them to the USPTO. Petitioner/applicant is advised that the record of a patent application is available to the public after publication of the application (unless a non-publication request in compliance with 37 CFR 1.213(a) is made in the application) or issuance of a patent. Furthermore, the record from an abandoned application may also be available to the public if the application is referenced in a published application or an issued patent (see 37 CFR 1.14). Checks and credit card authorization forms PTO-2038 submitted for payment purposes are not retained in the application file and therefore are not publicly available.

/hae-chan park/	July 7, 2008
Signature	Date
Hae-Chan Park	50,114
Typed or printed name	Registration Number, if applicable
8500 Leesburg Pike, Suite 7500	703-288-5105
Address	Telephone Number
Vienna, VA 22182	
Address	

Enclosures: [X] Fee Payment

[X] Reply

[ ] Terminal Disclaimer Form

[ ] Additional sheets containing statements establishing unintentional delay

[X] Other: Request for Continued Examination

CERTIFICATE OF MAILING OR TRANSMISSION [37 CFR 1.8(a)]

I hereby certify that this correspondence is being:

[ ] Deposited with the United States Postal Service on the date shown below with sufficient postage as first class mail in an envelope addressed to: Mail Stop Petition, Commissioner for Patents, P. O. Box 1450, Alexandria, VA 22313-1450.

[ ] Transmitted by facsimile on the date shown below to the United States Patent and Trademark Office at (571) 273-8300.

Date	Signature
	Typed or printed name of person signing certificate

PTO/SB/30EFS (03/08)
Approved for use through 07/31/2008. OMB 0651-0031
U.S. Patent and Trademark Office; U.S. DEPARTMENT OF COMMERCE

Under the Paperwork Reduction Act of 1995, no persons are required to respond to a collection of information unless it contains a valid OMB control number.

REQUEST FOR CONTINUED EXAMINATION(RCE)TRANSMITTAL
(Submitted Only via EFS-Web)

Application Number	10/930,944	Filing Date	2004-09-01	Docket Number (if applicable)	61610372US	Art Unit	2629
First Named Inventor	Jae-Seok JEONG			Examiner Name	HOLTON, STEVEN E.		

This is a Request for Continued Examination (RCE) under 37 CFR 1.114 of the above-identified application.
Request for Continued Examination (RCE) practice under 37 CFR 1.114 does not apply to any utility or plant application filed prior to June 8, 1995, or to any design application. The Instruction Sheet for this form is located at WWW.USPTO.GOV

SUBMISSION REQUIRED UNDER 37 CFR 1.114

Note: If the RCE is proper, any previously filed unentered amendments and amendments enclosed with the RCE will be entered in the order in which they were filed unless applicant instructs otherwise. If applicant does not wish to have any previously filed unentered amendment(s) entered, applicant must request non-entry of such amendment(s).

☐ Previously submitted. If a final Office action is outstanding, any amendments filed after the final Office action may be considered as a submission even if this box is not checked.

☐ Consider the arguments in the Appeal Brief or Reply Brief previously filed on _____

☐ Other _____

☒ Enclosed

☒ Amendment/Reply

☒ Information Disclosure Statement (IDS)

☐ Affidavit(s)/ Declaration(s)

☒ Other
Petition for Revival of an Application for Patent Abandoned Unintentionally

MISCELLANEOUS

☐ Suspension of action on the above-identified application is requested under 37 CFR 1.103(c) for a period of months _____
(Period of suspension shall not exceed 3 months; Fee under 37 CFR 1.17(i) required)

☐ Other _____

FEES

The RCE fee under 37 CFR 1.17(e) is required by 37 CFR 1.114 when the RCE is filed.

☒ The Director is hereby authorized to charge any underpayment of fees, or credit any overpayments, to Deposit Account No 503698

SIGNATURE OF APPLICANT, ATTORNEY, OR AGENT REQUIRED

☒ Patent Practitioner Signature

☐ Applicant Signature

RAM Fee History Query

Revenue Accounting and Management

Name/Number: 10930944 Total Records Found: 4

Start Date: Any Date End Date: Any Date

Accounting Date	Sequence Num.	Fee Type	Fee Code	Fee Amount	Mailroom Date	Payment Method
07/08/2008	00004400	4	1453	$1,540.00	07/07/2008	CC
07/08/2008	00004401	4	1801	$810.00	07/07/2008	CC
09/08/2004	00000126	1	8021	$40.00	09/01/2004	CK
09/02/2004	00000005	1	1001	$770.00	09/01/2004	CK

UNITED STATES PATENT AND TRADEMARK OFFICE

Commissioner for Patents
United States Patent and Trademark Office
P.O. Box 1450
Alexandria, VA 22313-1450
www.uspto.gov

H.C. PARK & ASSOCIATES, PLC
8500 LEESBURG PIKE, SUITE 7500
VIENNA, VA 22182

COPY MAILED

AUG 06 2009

OFFICE OF PETITIONS

In re Application of	:	
Jae-Seok JEONG	:	
Application No. 10/930,944	:	DECISION GRANTING PETITION
Filed: September 1, 2004	:	UNDER 37 CFR 1.313(c)(2)
Attorney Docket No. **6161.0372.US**	:	

This is a decision on the petition under 37 CFR 1.313(c)(2), filed August 5, 2009, to withdraw the above-identified application from issue after payment of the issue fee.

The petition is **GRANTED**.

The above-identified application is withdrawn from issue for consideration of a submission under 37 CFR 1.114 (request for continued examination). *See* 37 CFR 1.313(c)(2).

Petitioner is advised that the issue fee paid on July 16, 2009 cannot be refunded. If, however, this application is again allowed, petitioner may request that it be applied towards the issue fee required by the new Notice of Allowance.[1]

Telephone inquiries should be directed to the undersigned at (571) 272-7253.

This application is being referred to Technology Center AU 2629 for processing of the request for continued examination under 37 CFR 1.114 and for consideration of the concurrently filed information disclosure statement.

/Monica A. Graves/
Petitions Examiner, Office of Petitions

---

[1] *The request to apply the issue fee to the new Notice may be satisfied by completing and returning the new Part B – Fee(s) Transmittal Form (along with any balance due at the time of submission). Petitioner is advised that the Issue Fee Transmittal Form* ***must*** *be completed and timely submitted to avoid abandonment of the application.*

SPE RESPONSE FOR CERTIFICATE OF CORRECTION

Paper No.: _____

DATE : 10/22/08

TO SPE OF : Art Unit 2819

SUBJECT : Request for Certificate of Correction for Appl. No.: 10/939,90 Patent No.: 7,319,902

Please respond to this request for a certificate of correction within 7 days.

FOR IFW FILES:

Please review the requested changes/corrections as shown in the COCIN document(s) in the IFW application image. No new matter should be introduced, nor should the scope or meaning of the claims be changed.

Please complete the response (see below) and forward the completed response to scanning using document code COCX.

FOR PAPER FILES:

Please review the requested changes/corrections as shown in the attached certificate of correction. Please complete this form (see below) and forward it with the file to:

Certificates of Correction Branch (CofC)
South Tower - 9A22
Palm Location 7580

Certificates of Correction Branch
703-308-9390 ext. 114

Thank You For Your Assistance

The request for issuing the above-identified correction(s) is hereby:
(vote your decision on the appropriate box)

- [x] Approved — All changes apply.
- [ ] Approved in Part — Specify below which changes do not apply
- [ ] Denied — State the reasons for denial below

Comments: _____

SUPERVISORY PATENT EXAMINER

SPE — Art Unit 2819

PTOL-308 (REV. 7/03) U.S. DEPARTMENT OF COMMERCE Patent and Trademark Office

UNITED STATES PATENT AND TRADEMARK OFFICE

COMMISSIONER FOR PATENTS
UNITED STATES PATENT AND TRADEMARK OFFICE
P.O. BOX 1450
ALEXANDRIA, VA 22313-1450
www.uspto.gov

SYNGENTA BIOTECHNOLOGY, INC.
PATENT DEPARTMENT
3054 CORNWALLIS ROAD
P.O. BOX 12257
RESEARCH TRIANGLE PARK, NC 27709-2257

COPY MAILED
AUG 14 2006
OFFICE OF PETITIONS

In re Application of	:
Mousel	: DECISION ON PETITION
Application No. 10/930,967	:
Filed: August 31, 2004	:
Docket No.: 70507USNP	:

This is a decision on the petition under 37 CFR 1.137(b), filed June 23, 2006, to revive the above-identified application.

The petition is **GRANTED**.

This application became abandoned June 14, 2006 for failure to timely submit the issue fee in response to the Notice of Allowance and Issue Fee(s) Due ("Notice") mailed March 13, 2006. The Notice set a three month statutory period for reply. This decision precedes Notice of Abandonment.

A grantable petition pursuant to 37 C.F.R. § 1.137(b) must be accompanied by: (1) the required reply to the outstanding Office action or notice, unless previously filed; (2) the petition fee as set forth in 37 C.F.R. § 1.17(m); (3) a statement that the entire delay in filing the required reply from the due date for the reply until the filing of a grantable petition pursuant to 37 C.F.R. § 1.137(b) was unintentional; and (4)any terminal disclaimer (and fee set forth in 37 C.F.R. § 1.20(d)) required pursuant to 37 C.F.R. § 1.137(c).

The instant petition has been reviewed and found in compliance with the provisions of 37 CFR 1.137(b). Accordingly, the failure to timely submit a proper reply to the Notice is accepted as having been unintentionally delayed.

There is no indication that petitioner herein was ever empowered to prosecute the instant application. If petitioner desires to receive future correspondence regarding this application, the appropriate power of attorney documentation must be submitted. A courtesy copy of this decision will be mailed to petitioner. However, all future correspondence will be directed to the address of record until such time as appropriate instructions are received to the contrary.

Application No. 10/930,967

This application will be forwarded to Technology Center 1600 for consideration of the Rule 312 amendment submitted herewith.

Telephone inquiries concerning this matter may be directed to the undersigned at (571) 272-3205.

Alesia M. Brown
Petitions Attorney
Office of Petitions

CC: DANA REWOLDT
2369 330TH ST
SLATER, IA 50244

UNITED STATES PATENT AND TRADEMARK OFFICE

UNITED STATES DEPARTMENT OF COMMERCE
United States Patent and Trademark Office
Address: COMMISSIONER FOR PATENTS
P.O. Box 1450
Alexandria, Virginia 22313-1450
www.uspto.gov

HOLLINGSWORTH & FUNK
8500 Normandale Lake Blvd
SUITE 320
MINNEAPOLIS, MN 55437

Mail Date: 04/21/2010

Applicant	: Kent Lee	: DECISION ON REQUEST FOR
Patent Number	: 7591265	: RECALCULATION of PATENT
Issue Date	: 09/22/2009	: TERM ADJUSTMENT IN VIEW
Appliction No	: 10/930,979	: OF WYETH AND NOTICE OF INTENT TO
Filed	: 08/31/2004	: ISSUE CERTIFICATE OF CORRECTION
		:

The Request for Recalculation is **GRANTED** to the extent indicated.

The patent term adjustment has been determined to be **1207** days. The USPTO will *sua sponte* issue a certificate of correction reflecting the amount of PTA days determined by the recalculation.

Prior to the issuance of the certificate of correction, the USPTO will afford patentee an opportunity to be heard and request reconsideration. Accordingly, patentee has **one month or thirty (30) days**, whichever is longer, to file a request for reconsideration of this patent term adjustment calculation. See 35 U.S.C. 154(b)(3)(B)(ii) and 37 CFR 1.322(a)(4). No extensions of time will be granted under 37 CFR 1.136.

Patentee should use document code PET.OP if electronically filing a request for reconsideration of this patent term adjustment calculation. The patentee must also include the information required by 37 CFR 1.705(b)(2) and the fee required by 37 CFR 1.18(e). If patentee does not file a timely request for reconsideration of this patent term adjustment calculation including the information required by 37 CFR 1.705(b)(2) and the fee required by 37 CFR 1.18(e), the USPTO will issue a certificate of correction reflecting the PTA determination noted above.

Patentee should be aware that in order to preserve the right to review in the United States District Court for the District of Columbia of the USPTO patent term adjustment determination, patentee must ensure that he or she also take the steps required under 35 U.S.C. 154(b)(4)(A) in a timely manner. Nothing in the request for recalculation should be construed as providing an alternative time frame for commencing a civil action under 35 U.S.C. 154(b)(4)(A).

Any questions concerning this decision should be directed to the Office of Patent Legal Administration at 571-272-7702.

UNITED STATES PATENT AND TRADEMARK OFFICE

UNITED STATES DEPARTMENT OF COMMERCE
United States Patent and Trademark Office
Address: COMMISSIONER FOR PATENTS
P.O. Box 1450
Alexandria, Virginia 22313-1450
www.uspto.gov

HOLLINGSWORTH & FUNK
8500 Normandale Lake Blvd
SUITE 320
MINNEAPOLIS, MN 55437

Mail Date: 05/18/2010

Applicant : Kent Lee
Patent Number : 7591265
Issue Date : 09/22/2009
Application No : 10/930,979
Filed : 08/31/2004

: NOTICE CONCERNING IMPROPER
: CALCULATION OF PATENT TERM
: ADJUSTMENT BASED UPON USPTO
: IMPROPERLY MEASURING REDUCTION
: PERIOD UNDER 37 CFR 1.704(c)(10).

The United States Patent and Trademark Office (USPTO) discovered that in processing the recent recalculation decisions mailed in response to patentee's filed Request for Recalculation of Patent Term Adjustment in view of Wyeth, the USPTO improperly measured the reduction period for reductions under 37 CFR 1.704(c)(10). Pursuant to 37 CFR 1.704(c)(10), patentee's reduction begins on the date of filing the amendment under 37 CFR 1.312 ("1.312 amendment") or other related paper and ends on the date that the Office mails a response to the filing of the 1.312 amendment or other paper. It has been discovered that during the recalculation, the calculation failed to the limit the reduction to the mail date of the response to the 1.312 amendment or other paper. Accordingly, patentee's reductions were greater than warranted.

This notice **VACATES** the previous GRANTED request for recalculation and provides patentee with a revised GRANTED recalculation.

The patent term adjustment has been determined to be **1264** days. The USPTO will *sua sponte* issue a certificate of correction reflecting the amount of patent term adjustment (PTA) days determined by the recalculation.

Prior to the issuance of the certificate of correction, the USPTO will afford patentee an opportunity to be heard and request reconsideration. Accordingly, patentee has **one month or thirty (30) days** from the mail date of this notice, whichever is longer, to file a request for reconsideration of this PTA calculation. See 35 U.S.C. § 154(b)(3)(B)(ii) and 37 CFR 1.322(a)(4).

Patentee should use document code PET.OP if electronically filing a request for reconsideration of this PTA calculation. The patentee must also include the information required by 37 CFR 1.705(b)(2), and the fee required by 37 CFR 1.18(e). If patentee does not file a timely request for reconsideration of this PTA calculation, including the information required by 37 CFR 1.705(b)(2) and the fee required by 37 CFR 1.18(e), the USPTO will issue a certificate of correction reflecting the PTA determination noted above.

Patentee should be aware that in order to preserve the right of review of the USPTO's PTA determination in the United States District Court for the District of Columbia, patentee must ensure that the steps required under 35 U.S.C. § 154 (b)(4) are taken in a timely manner. Nothing in the request for recalculation should be construed as providing an alternative time frame for commencing a civil action under 35 U.S.C. § 154(b)(4).

UNITED STATES PATENT AND TRADEMARK OFFICE

UNITED STATES DEPARTMENT OF COMMERCE
United States Patent and Trademark Office
Address: COMMISSIONER FOR PATENTS
P.O. Box 1450
Alexandria, Virginia 22313-1450
www.uspto.gov

Welsh & Katz, Ltd.
Jon P. Christensen
22nd Floor
120 South Riverside Plaza
Chicago, IL 60606

Mail Date: 04/23/2010

Applicant	: Mike Peters	: DECISION ON REQUEST FOR
Patent Number	: 7668303	: RECALCULATION of PATENT
Issue Date	: 02/23/2010	: TERM ADJUSTMENT IN VIEW
Appliction No	: 10/930,999	: OF WYETH AND NOTICE OF INTENT TO
Filed	: 08/31/2004	: ISSUE CERTIFICATE OF CORRECTION
		:

The Request for Recalculation is **GRANTED** to the extent indicated.

The patent term adjustment has been determined to be **1514** days. The USPTO will *sua sponte* issue a certificate of correction reflecting the amount of PTA days determined by the recalculation.

Prior to the issuance of the certificate of correction, the USPTO will afford patentee an opportunity to be heard and request reconsideration. Accordingly, patentee has **one month or thirty (30) days**, whichever is longer, to file a request for reconsideration of this patent term adjustment calculation. See 35 U.S.C. 154(b)(3)(B)(ii) and 37 CFR 1.322(a)(4). No extensions of time will be granted under 37 CFR 1.136.

Patentee should use document code PET.OP if electronically filing a request for reconsideration of this patent term adjustment calculation. The patentee must also include the information required by 37 CFR 1.705(b)(2) and the fee required by 37 CFR 1.18(e). If patentee does not file a timely request for reconsideration of this patent term adjustment calculation including the information required by 37 CFR 1.705(b)(2) and the fee required by 37 CFR 1.18(e), the USPTO will issue a certificate of correction reflecting the PTA determination noted above.

Patentee should be aware that in order to preserve the right to review in the United States District Court for the District of Columbia of the USPTO patent term adjustment determination, patentee must ensure that he or she also take the steps required under 35 U.S.C. 154(b)(4)(A) in a timely manner. Nothing in the request for recalculation should be construed as providing an alternative time frame for commencing a civil action under 35 U.S.C. 154(b)(4)(A).

Any questions concerning this decision should be directed to the Office of Patent Legal Administration at 571-272-7702.

UNITED STATES PATENT AND TRADEMARK OFFICE

Commissioner for Patents
United States Patent and Trademark Office
P.O. Box 1450
Alexandria, VA 22313-1450
www.uspto.gov

COPY MAILED
NOV. 0 1 2006
OFFICE OF PETITIONS

IPSG, P.C.
P.O. BOX 700640
SAN JOSE CA 95170-0640

In re Application of	:	
David T. Hass et al.	:	
Application No. 10/931,003	:	DECISION ON PETITION
Filed: August 31, 2004	:	TO WITHDRAW
Attorney Docket No. RZMI-P111	:	FROM RECORD

This is a decision on the Request to Withdraw as attorney or agent of record under 37 C.F.R. § 1.36(b), filed August 1, 2006.

The request is **NOT APPROVED**.

A grantable request to withdraw as attorney/agent of record must be signed by every attorney/agent seeking to withdraw or contain a clear indication that one attorney is signing on behalf of another/others. A request to withdraw will not be approved unless at least 30 (thirty) days would remain between the date of approval and the later of the expiration date of a time to file a response or the expiration date of the maximum time period which can be extended under 37 C.F.R. § 1.136(a).

The Office cannot approve the request at this time since the reasons provided do not meet any of the conditions under the mandatory or permissive categories enumerated in 37 CFR 10.40. Section 10.40 of Title 37 of the Code of Federal Regulation states, "[a] practitioner shall not withdraw from employment in a proceeding before the Office without permission from the Office[.]" More specifically, 37 CFR 10.40 states, "[i]f paragraph (b) of this section is not applicable, a practitioner may not request permission to withdraw in matter pending before the Office unless such request or such withdrawal is" for one the permissive reasons listed in 37 CFR 10.40(c). The reasons set forth in the request, ***request is being made by the Assignee Raza Microelectronics***, do not meet any the conditions set forth in 37 CFR 10.40 because Raza Microelectronics did not intervene with a 3.73(b) statement.

All future communications from the Office will continue to be directed to the above-listed address until otherwise notified by applicant.

Telephone inquiries concerning this decision should be directed to Terri Williams at 571-272- 2991.

Terri Williams for

David Bucci
Petitions Examiner
Office of Petitions

cc: **Raza Microelectronics, Inc.**
Legal Department
18920 Forge Drive
Cupertino, CA 95014-0701

IFW

CUSTOMER NO. 32,986
IP STRATEGY GROUP, P.C. (IPSG)
P.O. Box 700640
San Jose, CA 95170-0640

PATENT APPLICATION
ATTORNEY DOCKET NO. RZMI-P111

AUG 9 2006

IN THE
UNITED STATES PATENT & TRADEMARK OFFICE

Applicant: HASS

Application No. 10/931,003

Filed: 08/31/2004

Title: ADVANCED PROCESSOR WITH INTERRUPT DELIVERY MECHANISM FOR MULTI-THREADED MULTI-CPU SYSTEM ON A CHIP

Examiner: UNKNOWN

Group No. 2122

Confirmation No. 7974

CERTIFICATE OF MAILING
I hereby certify that this correspondence is being deposited with the United States Postal Service as First Class Mail to, Commissioner for Patents, P.O. Box 1450, Alexandria, VA 22313-1450, on 7/26/2006.

Signed: /Alma Fazlic/
Alma Fazlic

REQUEST FOR WITHDRAWAL AS ATTORNEY OR AGENT AND CHANGE OF CORRESPONDENCE ADDRESS

Dear Sir:

At the request of Raza Microelectronics, Inc., please withdraw the undersigned, Dave Ashby, Esq. (Reg. No. 36,432) and all attorneys/agents associated with Customer Number 32,986 as attorney or agent for the above identified application. This request is being made because the Assignee Raza Microelectronics, Inc. wishes to terminate representation by myself, Dave Ashby, Esq. and the attorneys/agents associated with Customer Number 32,986.

Change correspondence address and direct all future correspondence to:

Raza Microelectronics, Inc.
Legal Department
18920 Forge Drive
Cupertino, CA 95014-0701

Respectfully submitted,

/Joseph A. Nguyen/ Reg. No. 37,899
Joseph A. Nguyen
Reg. No. 37,899

(408) 257-5500

UNITED STATES PATENT AND TRADEMARK OFFICE

Commissioner for Patents
United States Patent and Trademark Office
P.O. Box 1450
Alexandria, VA 22313-1450
www.uspto.gov
DIW May-08

COPY MAILED

MAY 29 2008

OFFICE OF PETITIONS

MICHAEL I KROLL
171 STILLWELL LANE
SYOSSET NY 11791

In re Application of :
Jeffrey J. Nau :
Application Number: 10/931011 : ON PETITION
Filing Date: 08/31/2004 :
Attorney Docket Number: JN-1-am :

This is a decision on the petition under 37 CFR 1.137(b)[1] filed on April 28, 2008.

The petition is **granted**.

This application became abandoned on July 30, 2007, for failure to timely submit an Appeal Brief in response to the Notice of Appeal filed on May 29, 2007, which set a two (2) month shortened period for reply. No extensions of the time for reply in accordance with 37 CFR 1.136(a) were obtained. Notice of Abandonment was mailed on February 19, 2008.

Receipt of the Request for Continued Examination (RCE) and amendment as the submission under 37 CFR 1.114, submitted with the present petition is acknowledged.

---

[1] Effective December 1, 1997, the provisions of 37 CFR 1.137(b) now provide that where the delay in reply was unintentional, a petition may be filed to revive an abandoned application or a lapsed patent pursuant to 37 CFR 1.137(b). A grantable petition filed under the provisions of 37 CFR 1.137(b) must be accompanied by:

(1) the required reply, unless previously filed. In a nonprovisional application abandoned for failure to prosecute, the required reply may be met by the filing of a continuing application. In a nonprovisional application filed on or after June 8, 1995, and abandoned for failure to prosecute, the required reply may also be met by the filing of a request for continued examination in compliance with § 1.114. In an application or patent, abandoned or lapsed for failure to pay the issue fee or any portion thereof, the required reply must be the payment of the issue fee or any outstanding balance thereof. In an application abandoned for failure to pay the publication fee, the required reply must include payment of the publication fee.

(2) the petition fee as set forth in 37 CFR 1.17(m);

(3) a statement that the entire delay in filing the required reply from the due date for the reply until the filing of a grantable petition pursuant to 37 CFR 1.137(b) was unintentional. The Director may required additional information where there is a question whether the delay was unintentional; and

(4) any terminal disclaimer (and fee as set forth in 37 CFR 1.20(d)) required pursuant to 37 CFR 1.137(c)).

The statement contained in the instant petition does not set forth that the entire delay from the due date of the required reply to the date of the filing of a grantable petition was unintentional as required by 37 CFR 1.137(b)(3). However, the statement contained in the instant petition is being so construed. Petitioner **must** notify the Office if this is not a correct interpretation.

The application is being referred to Technology Center Art Unit 2834 for further processing.

Telephone inquiries related to this decision should be directed to the undersigned at 571-272-3231.

Douglas I. Wood
Senior Petitions Attorney
Office of Petitions

UNITED STATES PATENT AND TRADEMARK OFFICE

Commissioner for Patents
United States Patent and Trademark Office
P.O. Box 1450
Alexandria, VA 22313-1450
www.uspto.gov

IPSG, P.C.
P.O. BOX 700640
SAN JOSE CA 95170-0640

COPY MAILED

NOV 13 2006

OFFICE OF PETITIONS

In re Application of	:	
HASS	:	
Application No. 10/931,014	:	DECISION ON PETITION
Filed: August 31, 2004	:	TO WITHDRAW
Attorney Docket No. RZMI-P116	:	FROM RECORD
	:	

This is a decision on the Request to Withdraw as attorney or agent of record under 37 C.F.R. § 1.36(b), filed August 1, 2006.

The request is **NOT APPROVED**.

A grantable request to withdraw as attorney/agent of record must be signed by every attorney/agent seeking to withdraw or contain a clear indication that one attorney is signing on behalf of another/others. A request to withdraw will not be approved unless at least 30 (thirty) days would remain between the date of approval and the later of the expiration date of a time to file a response or the expiration date of the maximum time period which can be extended under 37 C.F.R. § 1.136(a).

The Office cannot approve the request at this time since the reasons provided do not meet any of the conditions under the mandatory or permissive categories enumerated in 37 CFR 10.40. Section 10.40 of Title 37 of the Code of Federal Regulation states, "[a] practitioner shall not withdraw from employment in a proceeding before the Office without permission from the Office[.]" More specifically, 37 CFR 10.40 states, "[i]f paragraph (b) of this section is not applicable, a practitioner may not request permission to withdraw in matter pending before the Office unless such request or such withdrawal is" for one the permissive reasons listed in 37 CFR 10.40(c). The reasons set forth in the request, "at the request of Raza Microelectronics, Inc.", does not meet any of the conditions set forth in 37 CFR 10.40.

In order to request or take action in a patent matter, the assignee must establish its ownership of the patent to the satisfaction of the Director. In this regard, a Statement under 37 CFR 3.73(b) must have either: (i) documentary evidence of a chain of title from the original owner to the assignee (*e.g.*, copy of an executed assignment), and a statement affirming that the documentary evidence of the chain of title from the original owner to the assignee was or concurrently is being

submitted for recordation pursuant to § 3.11; or (ii) a statement specifying where documentary evidence of a chain of title from the original owner to the assignee is recorded in the assignment records of the Office (*e.g.*, reel and frame number).

All future communications from the Office will continue to be directed to the above-listed address until otherwise notified by applicant.

Telephone inquiries concerning this decision should be directed to the undersigned at 571-272-7253.

Monica A. Graves
Petitions Examiner
Office of Petitions

cc: **Raza Microelectronics, Inc.**
Legal Department
18920 Forge Drive
Cupertino, CA 95014-0701

UNITED STATES PATENT AND TRADEMARK OFFICE

Commissioner for Patents
United States Patent and Trademark Office
P.O. Box 1450
Alexandria, VA 22313-1450
www.uspto.gov

GEORGE A. ROLSTON
45 SHEPPARD AVE EAST
SUITE 900
TORONTO ON M2N5W-9 CA CANADA

COPY MAILED

JUN 23 2008

OFFICE OF PETITIONS

In re Application of	:	
Ernest R. Bodnar	:	
Application No. 10/931,042	:	ON PETITION
Filed: September 1, 2004	:	
Attorney Docket No. 1120U107	:	

This is a decision on the petition under the unintentional provisions of 37 CFR 1.137(b), filed October 2, 2007, to revive the above-identified application.

The petition is **DISMISSED**.

Any request for reconsideration of this decision must be submitted within TWO (2) MONTHS from the mail date of this decision. Extensions of time under 37 CFR 1.136(a) are permitted. The reconsideration request should include a cover letter entitled "Renewed Petition under 37 CFR 1.137(b)." This is **not** a final agency action within the meaning of 5 U.S.C. § 704.

The application became abandoned for failure to reply in a timely manner to the Restriction Requirement mailed February 16, 2007.

A grantable petition under 37 CFR 1.137(b) must be accompanied by: (1) the required reply, unless previously filed; (2) the petition fee as set forth in 37 CFR 1.17(m); (3) a statement that the entire delay in filing the required reply from the due date for the reply until the filing of a grantable petition pursuant to 37 CFR 1.137(b) was unintentional; and (4) any terminal disclaimer (and fee as set forth in 37 CFR 1.20(d)) required by 37 CFR 1.137(d). Where there is a question as to whether either the abandonment or the delay in filing a petition under 37 CFR 1.137 was unintentional, the Director may require additional information. See MPEP 711.03(c)(II)(C) and (D). The instant petition lacks item(s) (2).

The above petition was received in the U.S.P.T.O. on October 2, 2007. The current fees went into effect on September 30, 2007. Petitioner submitted a petition fee of $750 instead of $770. No authorization was supplied to charge the total remaining due of $20.

Further correspondence with respect to this matter should be addressed as follows:

By Mail: Mail Stop PETITION
Commissioner for Patents
P. O. Box 1450
Alexandria, VA 22313-1450

By hand: U. S. Patent and Trademark Office
Customer Service Window, Mail Stop Petitions
Randolph Building
401 Dulany Street
Alexandria, VA 22314

The centralized facsimile number is **(571) 273-8300.**

Telephone inquiries concerning this decision should be directed to the undersigned at (571) 272-3208.

Karen Creasy

Karen Creasy
Petitions Examiner
Office of Petitions

UNITED STATES PATENT AND TRADEMARK OFFICE

Commissioner for Patents
United States Patent and Trademark Office
P.O. Box 1450
Alexandria, VA 22313-1450
www.uspto.gov

GEORGE A. ROLSTON
45 SHEPPARD AVE. EAST
SUITE 900
TORONTO ON M2N5W-9 CA CANADA

COPY MAILED

AUG 20 2008

In re Application of	:	
Ernest R.Bodnar	:	
Application No. 10/931,042	:	DECISION GRANTING PETITION
Filed: September 1, 2004	:	UNDER 37 CFR 1.137(b)
Attorney Docket No. 1120U107	:	

This is a decision on the renewed petition under 37 CFR 1.137(b), filed July 7, 2008, to revive the above-identified application.

The petition is **GRANTED**.

The petition satisfies the conditions for revival pursuant to the provisions of 37 CFR 1.137(b) in that (1) the reply in the form of an response/election; (2) the petition fee; and (3) the required statement of unintentional delay have been received. Accordingly, the reply to the Restriction Requirement mailed February 16, 2007, is accepted as having been unintentionally delayed.

Telephone inquiries concerning this decision should be directed to the undersigned at (571) 272-3208.

This matter is being referred to Technology Center AU 3725 to consider the reply received August 15, 2007.

Karen Creasy

Karen Creasy
Petitions Examiner
Office of Petitions

UNITED STATES PATENT AND TRADEMARK OFFICE

Commissioner for Patents
United States Patent and Trademark Office
P.O. Box 1450
Alexandria, VA 22313-1450
www.uspto.gov

Date Mailed : 08/28/07

Patent No. : 7190527 B1
Patent Issued : 03/13/07
Docket No. : **Q83017**

Re: Request for Certificate of Correction

Consideration has been given your request for the issuance of a certificate of correction for the above-identified patent under the provisions of Rule(s) 1.322.

Respecting the alleged errors in the documents filed on 06/15/07; please see attachment. **"Therefore, no correction(s) is in order here under United States Codes (U.S.C.) 254 and the Code of Federal Regulation (C.F.R.) 1322."**

In view of the foregoing, your request in this matter is hereby denied.

Lamonte M. Newsome
For Cecelia Newman, Supervisor
Decisions & Certificates
Of Correction Branch
(703) 305-8309 or (703)-308-9390 #112

SUGHRUE MION, PLLC
2100 PENNSYLVANIA AVENUE, N.W.
SUITE 800
WASHINGTON DC 20037

LMN

SPE: R. Mack

SPE RESPONSE FOR CERTIFICATE OF CORRECTION

Paper No.: _____

DATE : 6/22/07

TO SPE OF : ART UNIT 2873

SUBJECT : Request for Certificate of Correction for Appl. No.: 10/931,051 Patent No.: 7190527

Please respond to this request for a certificate of correction within 7 days.

Please review the requested changes/corrections as shown in the **COCIN** document(s) in the IFW application image. No new matter should be introduced, nor should the scope or meaning of the claims be changed.

Please complete the response (see below) and forward the completed response to scanning using document code **COCX**.

Lamonte M. Newsome
Certificates of Correction Branch
703-308-9390 ext. 112

Thank You For Your Assistance

The request for issuing the above-identified correction(s) is hereby:
Note your decision on the appropriate box.

- ☐ **Approved** — **All** changes apply.
- ☐ **Approved in Part** — Specify below which changes **do not** apply.
- ☒ **Denied** — State the reasons for denial below.

Comments: For purposes of clear presentation, dependent claims should be grouped together with their parent claim. To correct the dependency error, only the dependency of claim 34 needs to be changed from claim 26 to claim 22 (column 47, line

Ricky Mack

RICKY MACK
SPE
SUPERVISORY PATENT EXAMINER

2873
Art Unit

UNITED STATES PATENT AND TRADEMARK OFFICE

Commissioner for Patents
United States Patent and Trademark Office
P.O. Box 1450
Alexandria, VA 22313-1450
www.uspto.gov

CERMAK & KENEALY LLP
515 E. BRADDOCK RD
ALEXANDRIA VA 22314

COPY MAILED

APR 0 8 2005

OFFICE OF PETITIONS

In re Application of
Adnan Eroglu et al.
Application No. 10/931,052
Filed: September 1, 2004
Attorney Docket No. 003-156

: DECISION ACCORDING STATUS
: UNDER 37 CFR 1.47(a)

This is in response to the petition filed January 19, 2005 under 37 CFR 1.47(a).

The petition under 37 CFR 1.47(a) is **GRANTED**.

The above-identified application was filed on September 1, 2004, naming Adnan Eroglu, Peter Flohr, Peter Stuber, Martin Zajadatz and Christian Oliver Paschereit as joint inventors but without a signed declaration. Accordingly, on November 1, 2004, a "Notice To File Missing Parts of Application" was mailed, requiring *inter alia* a properly executed oath or declaration.

In response, the instant petition under 37 CFR 1.47(a), an oath or declaration executed only by joint inventors Eroglu, Flohr, Stuber and Zajadatz, late filing surcharge and a one month extension of time request were filed. The petition argues that Mr. Paschereit refuses to execute the oath or declaration and thus to cooperate with the filing of the instant application.

A grantable petition under 37 CFR 1.47(a) requires: (1) proof that the non-signing inventor cannot be reached or refuses to sign the oath or declaration after having been presented with the application papers (specification, claims and drawings); (2) an acceptable oath or declaration in compliance with 35 U.S.C. §§ 115 and 116; (3) the petition fee; and (4) a statement of the last known address of the non-signing inventor.

The petition bears proof that the application papers were sent to Mr. Paschereit at his last known address and that to date he has not returned an executed copy of the oath or declaration.

The above-identified application and papers have been reviewed and found in compliance with 37 CFR 1.47(a). In view thereof, this application is hereby accorded Rule 1.47(a) status.

Thus, as provided in Rule 1.47c, this Office will forward notice of this application's filing to the non-signing inventor at the address given in the petition. Notice of the filing of this application will also be published in the Official Gazette.

This matter is being referred to Technology Center 3749 and will be examined in due course.

Telephone inquiries concerning this matter may be directed to the undersigned Petitions Attorney at (571) 272-3212.

Patricia Faison-Ball

Patricia Faison-Ball
Senior Petitions Attorney
Office of Petitions

UNITED STATES PATENT AND TRADEMARK OFFICE

Commissioner for Patents
United States Patent and Trademark Office
P.O. Box 1450
Alexandria, VA 22313-1450
www.uspto.gov

COPY MAILED

APR 08 2005

OFFICE OF PETITIONS

CHRISTIAN OLIVER PASCHEREIT
LOHENGRINSTRASSE 29
D-14109 BERLIN
GERMANY

In re Application of
Adnan Eroglu et al.
Application No. 10/931,052
Filed: September 1, 2004
For: BURNER HAVING A BURNER LANCE AND STAGED FUEL INJECTION

Dear Mr. Paschereit:

You are named as a joint inventor in the above identified United States patent application, filed under the provisions of 35 U.S.C. 116 (United States Code), and 37 CFR 1.47(a), Rules of Practice in Patent Cases. Should a patent be granted on the application you will be designated therein as a joint inventor.

As a named inventor you are entitled to inspect any paper in the file wrapper of the application, order copies of all or any part thereof (at a prepaid cost per 37 CFR 1.19) or make your position of record in the application. Alternatively, you may arrange to do any of the preceding through a registered patent attorney or agent presenting written authorization from you. If you care to join the application, counsel of record (see below) would presumably assist you. Joining in the application would entail the filing of an appropriate oath or declaration by you pursuant to 37 CFR 1.63.

Telephone inquiries regarding this communication should be directed to the undersigned Petitions Attorney at (571) 272-3212. Requests for information regarding your application should be directed to the File Information Unit at 703/308-2733. Information regarding how to pay for and order a copy of the application, or a specific paper in the application, should be directed to Certification Division at 703/308-9726 or 1-800-972-6382 (outside the Washington D.C. area).

Patricia Faison-Ball

Patricia Faison-Ball
Senior Petitions Attorney
Office of Petitions

cc:
CERMAK & KENEALY LLP
515 E. BRADDOCK RD
ALEXANDRIA VA 22314

UNITED STATES PATENT AND TRADEMARK OFFICE

Commissioner for Patents
United States Patent and Trademark Office
P.O. Box 1450
Alexandria, VA 22313-1450
www.uspto.gov

ANTONELLI, TERRY, STOUT & KRAUS, LLP
1300 NORTH SEVENTEENTH STREET
SUITE 1800
ARLINGTON VA 22209-3873

COPY MAILED
NOV 06 2008
OFFICE OF PETITIONS

In re Application of	:	
Ilzuka et al.	:	
Application No.: 10/931086	:	DECISION ON
Filing or 371(c) Date: 09/01/2004	:	PETITION
Attorney Docket Number: 500.44226X00	:	

This is a decision in response to the Petition for Withdrawal of Erroneous Holding of Abandonment, filed September 30, 2008. The petition is properly treated under 37 C.F.R. § 1.181(a).

This Petition is hereby granted.

The above-identified application became abandoned for failure to timely and properly reply to the non-final Office action, mailed December 13, 2007. The Office action set a three (3) month period for reply. Extensions of time were available under 37 CFR 1.136(a). No reply having been received, the application became abandoned on March 14, 2008. A Notice of Abandonment was mailed June 30, 2008.

Applicant files the present Petition and asserts that a timely reply to the Office action was filed on April 14, 2008, including a request for a one (1) month extension of time and fee. In support of this assertion, Applicant includes a copy of the reply, along with a copy of an Auto-Reply Facsimile Transmission report from this Office acknowledging receipt of 18 pages from petitioner on April 14, 2008. A review of the copy of the Auto-Reply Facsimile Transmission report filed with the petition reveals that it includes a Certificate of Transmission under 37 CFR 1.8 that the reply was sent on April 14, 2008. The Certificate of Transmission was executed by petitioner herein.

The file record does not include the originally submitted papers. Failure to receive correspondence which includes a certificate of mailing or certificate of facsimile transmission is addressed in 37 CFR 1.8(b), reproduced below:

In the event that correspondence is considered timely filed by being mailed or transmitted in accordance with paragraph (a) of this section, but not received in the U.S. Patent and Trademark Office after a reasonable amount of time has elapsed from the time of mailing

or transmitting of the correspondence, or after the application is held to be abandoned, or after the proceeding is dismissed or decided with prejudice, or the prosecution of a reexamination proceeding is terminated pursuant to § 1.550(d) or § 1.957(b) or limited pursuant to § 1.957(c), or a requester paper is refused consideration pursuant to §a), the correspondence will be considered timely if the party who forwarded such correspondence:

(1)Informs the Office of the previous mailing or transmission of the correspondence promptly after becoming aware that the Office has no evidence of receipt of the correspondence;

(2)Supplies an additional copy of the previously mailed or transmitted correspondence and certificate; and

(3)Includes a statement that attests on a personal knowledge basis or to the satisfaction of the Director to the previous timely mailing, transmission or submission. If the correspondence was sent by facsimile transmission, a copy of the sending unit's report confirming transmission may be used to support this statement. If the correspondence was transmitted via the Office electronic filing system, a copy of an acknowledgment receipt generated by the Office electronic filing system confirming submission may be used to support this statement.

(c) The Office may require additional evidence to determine if the correspondence was timely filed.

Applicant has complied with the requirements of 37 CFR 1.8(b). A preponderance of the evidence demonstrates that a timely reply was filed.

In view of the foregoing, the petition is granted. The holding of abandonment is hereby withdrawn.

The application will be referred to Technology Center Art Unit 2155 for processing of the Reply, and for continued examination in due course.

Telephone inquiries concerning this matter should be directed to the undersigned at (571) 272-3232.

/Derek L. Woods/
Derek L. Woods
Attorney
Office of Petitions

SPE RESPONSE FOR CERTIFICATE OF CORRECTION

Paper No.: _____

DATE : 1/8/09

TO SPE OF : ART UNIT 2879 Patel Nimeshkumar (Spe)

SUBJECT : Request for Certificate of Correction for Appl. No.: 10/931094 Patent No.: 7157850

Please respond to this request for a certificate of correction within 7 days.

FOR IFW FILES:

Please review the requested changes/corrections as shown in the **COCIN** document(s) in the IFW application image. No new matter should be introduced, nor should the scope or meaning of the claims be changed.

Please complete the response (see below) and forward the completed response to scanning using document code **COCX**.

FOR PAPER FILES:

Please review the requested changes/corrections as shown in the attached certificate of correction. Please complete this form (see below) and forward it with the file to:

Certificates of Correction Branch (CofC)
South Tower - 9A22
Palm Location 7580

Certificates of Correction Branch
703-308-9390 ext. _____

Thank You For Your Assistance

The request for issuing the above-identified correction(s) is hereby:
Note your decision on the appropriate box.

- ☑ **Approved** — **All** changes apply.
- ☐ **Approved in Part** — Specify below which changes **do not** apply.
- ☐ **Denied** — State the reasons for denial below.

Comments: _____

/TTon/SPE 2889 — **SPE**

2889 — **Art Unit**

UNITED STATES PATENT AND TRADEMARK OFFICE

UNITED STATES DEPARTMENT OF COMMERCE
United States Patent and Trademark Office
Address: COMMISSIONER FOR PATENTS
P.O. Box 1450
Alexandria, Virginia 22313-1450
www.uspto.gov

APPLICATION NO.	FILING DATE	FIRST NAMED INVENTOR	ATTORNEY DOCKET NO.	CONFIRMATION NO.
10/931,099	08/31/2004	Andrew Douglas Delano	200311431-1	9524

22879 7590 01/07/2010
HEWLETT-PACKARD COMPANY
Intellectual Property Administration
3404 E. Harmony Road
Mail Stop 35
FORT COLLINS, CO 80528

EXAMINER
CIRIC, LJILJANA V

ART UNIT	PAPER NUMBER
3744	

NOTIFICATION DATE	DELIVERY MODE
01/07/2010	ELECTRONIC

Please find below and/or attached an Office communication concerning this application or proceeding.

The time period for reply, if any, is set in the attached communication.

Notice of the Office communication was sent electronically on above-indicated "Notification Date" to the following e-mail address(es):

JERRY.SHORMA@HP.COM
ipa.mail@hp.com
laura.m.clark@hp.com

UNITED STATES PATENT AND TRADEMARK OFFICE

Commissioner for Patents
United States Patent and Trademark Office
P.O. Box 1450
Alexandria, VA 22313-1450
www.uspto.gov

HEWLETT-PACKARD COMPANY
Intellectual Property Administration
3404 E. Harmony Road
Mail Stop 35
FORT COLLINS CO 80528

In re Application of: DELANO, ANDREW DOUGLAS et al Serial No. 10/931,099 Filed: Aug. 31, 2004 Docket: 200311431-1 Title: HEAT SINK FIN WITH STATOR BLADE	DECISION ON PETITION UNDER 37 CFR § 1.181

This is a decision on the petition filed on July 30, 2009 under 37 CFR 1.181 requesting withdrawal of the objection to the amended abstract of February 25, 2008 in the last Office action mailed April 30, 2009.

The petition is **Granted.**

In finding petitioner's points of argument persuasive, the requested relief is granted. Since the applicants do not wish to make further correction in the amended abstract as suggested and requested by the examiner, the examiner has been requested to accept the amended abstract of February 25, 2008 as is. The objection to the amended abstract under MPEP § 608.01(b) in the last Office action mailed April 30, 2009 is hereby withdrawn.

The application is being forwarded to the examiner via the Supervisory Patent Examiner of Art Unit 3744 for consideration of the amendment under 37 CFR 1.111 filed on July 30, 2009. Any inquiry regarding this decision should be directed to Henry C. Yuen, Special Programs Examiner, at (571) 272-4856.

The petition is GRANTED.

Robert Olszewski, Director
Technology Center 3700

UNITED STATES PATENT AND TRADEMARK OFFICE

UNITED STATES DEPARTMENT OF COMMERCE
United States Patent and Trademark Office
Address: COMMISSIONER FOR PATENTS
P.O. Box 1450
Alexandria, Virginia 22313-1450
www.uspto.gov

BERESKIN AND PARR LLP/S.E.N.C.R.L., s.r.l.
40 KING STREET WEST
BOX 401
TORONTO, ON M5H 3Y2
CANADA

Mail Date: 04/26/2010

Applicant	: Michael S. Brown	: DECISION ON REQUEST FOR
Patent Number	: 7631183	: RECALCULATION of PATENT
Issue Date	: 12/08/2009	: TERM ADJUSTMENT IN VIEW
Application No	: 10/931,108	: OF WYETH AND NOTICE OF INTENT TO
Filed	: 09/01/2004	: ISSUE CERTIFICATE OF CORRECTION
		:

The Request for Recalculation is **GRANTED** to the extent indicated.

The patent term adjustment has been determined to be **1186** days. The USPTO will *sua sponte* issue a certificate of correction reflecting the amount of PTA days determined by the recalculation.

Prior to the issuance of the certificate of correction, the USPTO will afford patentee an opportunity to be heard and request reconsideration. Accordingly, patentee has **one month or thirty (30) days**, whichever is longer, to file a request for reconsideration of this patent term adjustment calculation. See 35 U.S.C. 154(b)(3)(B)(ii) and 37 CFR 1.322(a)(4). No extensions of time will be granted under 37 CFR 1.136.

Patentee should use document code PET.OP if electronically filing a request for reconsideration of this patent term adjustment calculation. The patentee must also include the information required by 37 CFR 1.705(b)(2) and the fee required by 37 CFR 1.18(e). If patentee does not file a timely request for reconsideration of this patent term adjustment calculation including the information required by 37 CFR 1.705(b)(2) and the fee required by 37 CFR 1.18(e), the USPTO will issue a certificate of correction reflecting the PTA determination noted above.

Patentee should be aware that in order to preserve the right to review in the United States District Court for the District of Columbia of the USPTO patent term adjustment determination, patentee must ensure that he or she also take the steps required under 35 U.S.C. 154(b)(4)(A) in a timely manner. Nothing in the request for recalculation should be construed as providing an alternative time frame for commencing a civil action under 35 U.S.C. 154(b)(4)(A).

Any questions concerning this decision should be directed to the Office of Patent Legal Administration at 571-272-7702.

UNITED STATES PATENT AND TRADEMARK OFFICE

COMMISSIONER FOR PATENTS
UNITED STATES PATENT AND TRADEMARK OFFICE
P.O. BOX 1450
ALEXANDRIA, VA 22313-1450
www.uspto.gov

BERESKIN AND PARR
40 KING STREET WEST
BOX 401
TORONTO ON M5H 3Y2 CA CANADA

MAILED

APR 16 2009

OFFICE OF PETITIONS

In re Application of	:	
Adams et al.	:	
Application No. 10/931,109	:	ON APPLICATION FOR
Filed: September 1, 2004	:	PATENT TERM ADJUSTMENT
Attorney Docket No. 13210-73	:	

This is in response to the APPLICATION FOR PATENT TERM ADJUSTMENT filed February 4, 2009. Applicant requests that the determination of patent term adjustment be increased by 237 days to 1140 days. Applicant requests this correction on the basis that the Office will take in excess of three years to issue this patent and in light of the recent court decision in Wyeth v. Dudas, No. 07-1492 (D.D.C. September 30, 2008).

As the instant application for patent term adjustment requests reconsideration of the patent term adjustment as it relates to the Office's failure to issue the patent within three years of the filing date, a decision is being **held in abeyance** until after the actual patent date. Knowledge of the actual date the patent issues is required to calculate the amount, if any, of additional patent term patentee is entitled to for Office failure to issue the patent within three years. See 37 CFR 1.703(b). (This is true even in this instance where a request for continued examination (RCE) was filed. The computer will not undertake the § 1.703(b) calculation until the actual date of issuance of the patent has been determined. Accordingly, it is still too soon to make a determination as to the correctness of any period of adjustment that will or will not be entered pursuant to § 1.703(b)).

Applicant is given **TWO (2) MONTHS** from the issue date of the patent to file a written request for reconsideration of the patent term adjustment for Office failure to issue the patent within three years. A copy of this decision should accompany the request. Applicant may seek such consideration without payment of an additional fee. However, as to all other bases for seeking reconsideration of the patent term adjustment indicated in the patent, all requirements of § 1.705(d) must be met. Requests for reconsideration on other bases must be timely filed and must include payment of the required fee.

Rather than file the request for reconsideration of Patent Term Adjustment at the time of the mailing of the notice of allowance, applicant is advised that they may wait until the time of the issuance of the patent and file a request for reconsideration of the patent term pursuant to 37 CFR 1.705(d). The USPTO notes that it does not calculate the amount of time earned pursuant to 37 CFR 1.702(b) until the time of the issuance of the patent and accordingly, the Office will consider any request for reconsideration of the patent term adjustment due to an error in the calculation of 37 CFR 1.702(b) to be timely if the request for reconsideration is filed within two months of the issuance of the patent.

It is acknowledged that applicant is correct that any period of adjustment will be entered in light of 35 U.S.C. 154(B) GUARANTEE OF NO MORE THAN 3-YEAR APPLICATION PENDENCY, which provides that:

> Subject to the limitations under paragraph (2), if the issue of an original patent is delayed due to the failure of the United States Patent and Trademark Office to issue a patent within 3 years after the actual filing date of the application in the United States, not including —
>
> (i) any time consumed by continued examination of the application requested by the applicant under section 132(b);

It is noted that a Request for Continued Examination (RCE) was filed in this application on December 16, 2008.

The Office acknowledges submission of the $200.00 fee set forth in 37 CFR 1.18(e). No additional fees are required.

The application is being forwarded to the Office of Data Management for issuance of the patent. The patent term adjustment indicated on the patent (as shown on the Issue Notification mailed about three weeks prior to patent issuance) will include any additional adjustment accrued both for Office delay in issuing the patent more than four months after payment of the issue fee and satisfaction of all outstanding requirements, and for the Office taking in excess of three years to issue the patent (to the extent that the three-year period does not overlap with periods already accorded).

Telephone inquiries specific to this decision should be directed to Senior Petitions Attorney, Christina Tartera Donnell, at (571) 272-3211.

Kery A. Fries
Senior Legal Advisor
Office Patent Legal Administration

UNITED STATES PATENT AND TRADEMARK OFFICE

COMMISSIONER FOR PATENTS
UNITED STATES PATENT AND TRADEMARK OFFICE
P.O. BOX 1450
ALEXANDRIA, VA 22313-1450
www.uspto.gov

STANLEY P. FISHER
REED SMITH LLP
SUITE 1400
3110 FAIRVIEW PARK DRIVE
FALLS CHURCH, VA 22042-4503

COPY MAILED
SEP 2 0 2006
OFFICE OF PETITIONS

In re Application of	:	
Tomoki Nakanura, et al.	:	
Application No. 10/931,120	:	ON PETITION
Filed: September 1, 2004	:	
Attorney Docket No.: HITA.0606	:	

This is a decision on the petition, filed September 13, 2006, under 37 CFR 1.313(c)(2) to withdraw the above-identified application from issue after payment of the issue fee.

The petition is **GRANTED**.

The above-identified application is withdrawn from issue for consideration of a submission under 37 CFR 1.114 (request for continued examination). See 37 CFR 1.313(c)(2).

Petitioner is advised that the issue fee paid on September 1, 2006, in the above-identified application cannot be refunded. If, however, the above-identified application is again allowed, petitioner may request that it be applied towards the issue fee required by the new Notice of Allowance. [1]

Telephone inquiries relating to this decision should be directed to the undersigned at (571) 272-3204.

The application is being referred to Technology Center AU 2821 for further processing of the request for continued examination under 37 CFR 1.114.

Sherry D. Brinkley
Petitions Examiner
Office of Petitions

[1]The request to apply the issue fee to the new Notice may be satisfied by completing and returning the new Issue Fee Transmittal Form PTOL-85(b), which includes the following language thereon: "Commissioner for Patents is requested to apply the Issue Fee and Publication Fee (if any) or re-apply any previously paid issue fee to the application identified above." Petitioner is advised that, whether a fee is indicated as being due or not, the Issue Fee Transmittal Form **must** be completed and timely submitted to avoid abandonment. Note the language in bold text on the first page of the Notice of Allowance and Fee(s) Due (PTOL-85).

UNITED STATES PATENT AND TRADEMARK OFFICE

UNITED STATES DEPARTMENT OF COMMERCE
United States Patent and Trademark Office
Address: COMMISSIONER FOR PATENTS
P.O. Box 1450
Alexandria, Virginia 22313-1450
www.uspto.gov

APPLICATION NO.	FILING DATE	FIRST NAMED INVENTOR	ATTORNEY DOCKET NO.	CONFIRMATION NO.
10/931,120	09/01/2004	Tomoki Nakamura	HITA.0606	8678

7590 12/09/2008

Stanley P. Fisher
Reed Smith LLP
Suite 1400
3110 Fairview Park Drive
Falls Church, VA 22042-4503

EXAMINER
VU, JIMMY T

ART UNIT	PAPER NUMBER
2821	

MAIL DATE	DELIVERY MODE
12/09/2008	PAPER

Please find below and/or attached an Office communication concerning this application or proceeding.

The time period for reply, if any, is set in the attached communication.

UNITED STATES PATENT AND TRADEMARK OFFICE

Commissioner for Patents
United States Patent and Trademark Office
P.O. Box 1450
Alexandria, VA 22313-1450
www.uspto.gov

wk

12/9/08

In re application of	:	
Takayuki Fujiwara et al.	:	
Serial No. 10/831,120	:	DECISION ON
Filed: April 26, 2004	:	PETITION
For: Fluid Mixing Apparatus And Fluid Mixing System	:	

This is a decision on the PETITION FOR A NEW NOTICE OF PANEL DECISION restarting the period for response, on the grounds that it was never received by mail and was only just recently discovered in Private PAIR. Petitioner asserts that the Decision dated July 14, 2008 was not received.

Petitioner has provided a copy of the docket record where the non-received Panel Decision would have been entered had it been received and docketed.

The petition is **GRANTED**.

Jacqueline M. Stone

Jacqueline M. Stone
Director, Technology Center 1700
High Polymer Chemistry, Plastics,
Stock Materials and Compositions

David P. Emery
SUGHRUE MION, PLLC
2100 PENNSYLVANIA AVENUE, N.W.
SUITE 800
WASHINGTON DC 20037

UNITED STATES PATENT AND TRADEMARK OFFICE

Commissioner for Patents
United States Patent and Trademark Office
P.O. Box 1450
Alexandria, VA 22313-1450
www.uspto.gov

QUARLES & BRADY LLP
FIRSTAR PLAZA ONE SOUTH PINCKNEY STREET
P.O. BOX 2113, SUITE 600
MADISON WI 53701-2113

COPY MAILED

NOV 0 1 2004

OFFICE OF PETITIONS

NOTICE

In re Application of :
Porter et al :
Application No. 10/931,142 :
Filed: August 31, 2004 :
Attorney Docket No. 480927.90031 CIP :

This is a notice regarding your request for acceptance of a fee deficiency submission under 37 CFR 1.28. On September 1, 1998, the Court of Appeals for the Federal Circuit held that 37 CFR 1.28(c) is the sole provision governing the time for correction of the erroneous payment of the issue fee as a small entity. **See DH Technology v. Synergystex International, Inc. 154 F.3d 1333, 47 USPQ2d 1865 (Fed. Cir. Sept. 1, 1998).**

The Office no longer investigates or rejects original or reissue applications under 37 CFR 1.56. **1098 Off. Gaz. Pat. Office 502 (January 3, 1989).** Therefore, nothing in this Notice is intended to imply that an investigation was done.

Your fee deficiency submission under 37 CFR 1.28 is hereby **ACCEPTED.**

Inquiries related to this communication should be directed to the undersigned at (571) 272-3208.

Karen Creasy

Karen Creasy
Petitions Examiner
Office of Petitions
Office of the Deputy Commissioner
for Patent Examination Policy

UNITED STATES PATENT AND TRADEMARK OFFICE

Commissioner for Patents
United States Patent and Trademark Office
P.O. Box 1450
Alexandria, VA 22313-1450
www.uspto.gov

PFIZER INC
150 EAST 42ND STREET
5TH FLOOR - STOP 49
NEW YORK NY 10017-5612

COPY MAILED

AUG 24 2005

OFFICE OF PETITIONS

In re Application of	:	
Imran Ahmed et al	:	
Application No. 10/931,143	:	DECISION GRANTING PETITION
Filed: August 31, 2004	:	UNDER 37 CFR 1.137(b)
Attorney Docket No. PC26106A	:	

This is a decision on the petition under 37 CFR 1.137(b), filed June 20, 2005, to revive the above-identified application.

The petition is **GRANTED**.

The above-identified application became abandoned for failure to reply in a timely manner to the Notice To File Missing Parts Of Nonprovisional Application mailed November 1, 2004, which set a period for reply of two (2) months. No extensions of time under the provisions of 37 CFR 1.136(a) were obtained. Accordingly, the above-identified application became abandoned on January 2, 2005.

Telephone inquiries concerning this decision should be directed to the undersigned at (571) 272-3208.

This matter is being referred to the Office of Initial Patent Examination.

Karen Creasy

Karen Creasy
Petitions Examiner
Office of Petitions
Office of the Deputy Commissioner
for Patent Examination Policy

UNITED STATES PATENT AND TRADEMARK OFFICE

Commissioner for Patents
United States Patent and Trademark Office
P.O. Box 1450
Alexandria, VA 22313-1450
www.uspto.gov

PFIZER INC.
150 EAST 42ND STREET
5TH FLOOR - STOP 49
NEW YORK NY 10017-5612

COPY MAILED

SEP 28 2006

OFFICE OF PETITIONS

In re Application of	:	
Imran Ahmed et al	:	
Application No. 10/931,143	:	DECISION GRANTING PETITION
Filed: August 31, 2004	:	UNDER 37 CFR 1.137(b)
Attorney Docket No. 26106A	:	

This is a decision on the petition under 37 CFR 1.137(b), filed January 13, 2006, to revive the above-identified application.

The petition is **GRANTED**.

The petition satisfies the conditions for revival pursuant to the provisions of 37 CFR 1.137(b) in that (1) the reply (2) the petition fee; and (3) the required statement of unintentional delay have been received. Accordingly, the reply of January 13, 2006, is accepted as having been unintentionally delayed.

Telephone inquiries concerning this decision should be directed to the undersigned at (571) 272-3208.

This matter is being referred to the Office of Initial Patent Examination.

Karen Creasy

Karen Creasy
Petitions Examiner
Office of Petitions

Patent
EBERT009

IN THE UNITED STATES PATENT AND TRADEMARK OFFICE

In re the Application of:	**Anticipated Group Art Unit:** 1733
Johnson, et al.	**Anticipated Examiner:**
Serial No.: Not yet assigned	J. Aftergut
Filed: Concurrently herewith	
Continuation-in-part of Serial No.: 10/744,630	
Filed: December 23, 2003	
For: COMPOSITE LAMINATE REINFORCED WITH CURVILINEAR 3-D FIBER AND METHOD OF MAKING THE SAME	

Commissioner for Patents
P.O. Box 1450
Alexandria, VA 22313-1450

PETITION TO MAKE SPECIAL DUE TO APPLICANT'S AGE

Applicants of the above-referenced application hereby petition to make the above-identified application special based on one of the Applicants, James H. Hook, being over 65 years old pursuant to MPEP 708.02. Attached hereto is a Declaration of James H. Hook and a photocopy of his driver's license in support of this petition.

NOV 30 2004

10/931167
PETITION GRANTED

Richard Crispino
Special Program Examiner
TC 1700

104233.000006/414563.01

UNITED STATES PATENT AND TRADEMARK OFFICE

Commissioner for Patents
United States Patent and Trademark Office
P.O. Box 1450
Alexandria, VA 22313-1450
www.uspto.gov

Edwards Angell Palmer & Dodge LLP
P.O. Box 55874
Boston, MA 02205

COPY MAILED

JAN 3 1 2008

OFFICE OF PETITIONS

In re Application of	:	
Ron Gangemi	:	
Application No. 10/931,183	:	DECISION ON PETITION
Filed: August 31, 2004	:	TO WITHDRAW
Attorney Docket No. 65622 (53022)	:	FROM RECORD

This is a decision on the Request to Withdraw as attorney or agent of record under 37 C.F.R. § 1.36(b), filed August 24, 2007.

The request is **APPROVED**.

A grantable request to withdraw as attorney/agent of record must be signed by every attorney/agent seeking to withdraw or contain a clear indication that one attorney is signing on behalf of another/others. A request to withdraw will not be approved unless at least 30 (thirty) days would remain between the date of approval and the later of the expiration date of a time to file a response or the expiration date of the maximum time period which can be extended under 37 C.F.R. § 1.136(a).

The request was signed by Steven M. Jensen on behalf of all attorneys of record. All attorneys/agents have been withdrawn. Applicant is reminded that there is no attorney of record at this time.

The request to change the correspondence of record is not acceptable as the requested correspondence address is not that of: (1) the first named signing inventor; or (2) an intervening assignee of the entire interest under 37 C.F.R 3.71. All future communications from the Office will be directed to the first named signing inventor at the first copied address below until otherwise properly notified by the applicant.

There is an outstanding Office action mailed October 9, 2007 that requires a reply from the applicant.

Telephone inquiries concerning this decision should be directed to Terri Williams at 571-272-2991.

T. Williams

Terri Williams
Petitions Examiner
Office of Petitions

cc: **Ron Gangemi**
P.O. Box 2058
Nevada City, CA 95959

cc: **Open Energy Corporation**
226 Edward Street, Unit 1
Aurora, Ontario L4G 3S8
Canada

UNITED STATES PATENT AND TRADEMARK OFFICE

UNITED STATES DEPARTMENT OF COMMERCE
United States Patent and Trademark Office
Address: COMMISSIONER FOR PATENTS
P.O. Box 1450
Alexandria, Virginia 22313-1450
www.uspto.gov

APPLICATION NUMBER	FILING OR 371(C) DATE	FIRST NAMED APPLICANT	ATTY. DOCKET NO./TITLE
10/931,183	08/31/2004	Ron Gangemi	65622 (53022)

CONFIRMATION NO. 1688

POWER OF ATTORNEY NOTICE

21874
EDWARDS ANGELL PALMER & DODGE LLP
P.O. BOX 55874
BOSTON, MA 02205

OC000000028010955

Date Mailed: 01/30/2008

NOTICE REGARDING CHANGE OF POWER OF ATTORNEY

This is in response to the Power of Attorney filed 08/24/2007.

- The withdrawal as attorney in this application has been accepted. Future correspondence will be mailed to the new address of record. 37 CFR 1.33.

/tswilliams/

Office of Initial Patent Examination (571) 272-4000 or 1-800-PTO-9199

UNITED STATES PATENT AND TRADEMARK OFFICE

Commissioner for Patents
United States Patent and Trademark Office
P.O. Box 1450
Alexandria, VA 22313-1450
www.uspto.gov

MOTOROLA, INC.
1303 EAST ALGONQUIN ROAD
IL01/3RD
SCHAUMBURG IL 60196

MAILED

APR 30 2009

OFFICE OF PETITIONS

In re Application of	:	
Crocker et al.	:	
Application No.: 10/931188	:	ON PETITION
Filing or 371(c) Date: 08/31/2004	:	
Attorney Docket Number:	:	
CE11867R	:	

This is a decision on the Petition for Revival of an Application for Patent Abandoned Unintentionally Under 37 C.F.R. § 1.137(b), filed March 9, 2009.

This Petition is hereby **granted**.

The above-identified application became abandoned for failure to timely reply to the non-final Office action, mailed March 20, 2008. The Office action set a three (3) period for reply. Extensions of time under 37 CFR 1.136(a) were available. No reply having been received, the application became abandoned on June 21, 2008. A Notice of Abandonment was mailed September 30, 2008.

Applicant files the present petition and includes an Amendment in response to the Office action. The petition satisfies the conditions for revival pursuant to the provisions of 37 CFR 1.137(b) in that (1) the reply in the form of an Amendment is filed with the present petition; (2) the petition fee; and (3) the required statement of unintentional delay. Accordingly, the reply is accepted as having been unintentionally delayed.

This application is being referred to Technology Center Art Unit 2617 for processing of the Amendment filed with the petition in the normal course of business.

Telephone inquiries concerning this decision should be directed to the undersigned at (571) 272-3232.

/Derek L. Woods/
Derek L. Woods
Attorney
Office of Petitions

UNITED STATES PATENT AND TRADEMARK OFFICE

Commissioner for Patents
United States Patent and Trademark Office
P.O. Box 1450
Alexandria, VA 22313-1450
www.uspto.gov

BAYER MATERIAL SCIENCE LLC
100 BAYER ROAD
PITTSBURGH PA 15205

COPY MAILED
FEB 15 2005
OFFICE OF PETITIONS

In re Application of	:
Brad Lemon et al.	:
Application No. 10/931,203	: DECISION GRANTING PETITION
Filed: August 31, 2004	:
Attorney Docket No 67161-163	:

This is a decision on the petition filed January 10, 2005, in response to the "Notice of Omitted Items" mailed December 6, 2004, which is treated under 37 CFR 1.182.

The instant application was filed August 31, 2004 and a filing date was accorded. However, the Notice indicated that Figures 7, 8A & 8B described in the specification appeared to have been omitted.

Petitioner asserts that Figures 7, 8A & 8B were among the papers filed on August 31, 2004, and submits, *inter alia*, a "legible" postcard receipt in evidence thereof. The postcard receipt, identifies the application and acknowledges, inter alia, that the application included eight (8) sheets of drawings containing Figures 1-10 and bears a United States Patent and Trademark Office date-stamp of August 31, 2004. However, only seven (7) sheets of drawing figures is of record and while the postcard did not specifically itemize the number of Figures, it is obvious that Figures 7, 8A and 8B were on sheet 7. Additionally, the postcard receipt lacks any notation of non-receipt of any item listed. In view thereof, the petition is **GRANTED.**

Given the basis for granting the petition, the petition fee paid in the amount of $130.00 is not required and will be credited to deposit account no. 13-3848.

This application is being forwarded to the Office of Initial Patent Examination (OIPE) for further processing, using the application papers received in the Office on August 31, 2004 and Figures 7, 8A & 8B submitted on petition January 10, 2005.

Telephone inquiries regarding this decision should be directed to the undersigned Petitions Attorney at (571) 272-3212.

Patricia Faison-Ball

Patricia Faison-Ball
Senior Petitions Attorney
Office of Petitions

UNITED STATES PATENT AND TRADEMARK OFFICE

Commissioner for Patents
United States Patent and Trademark Office
P.O. Box 1450
Alexandria, VA 22313-1450
www.uspto.gov

ZENITH ELECTRONICS CORPORATION
2000 MILLBROOK DRIVE
LINCOLNSHIRE IL 60069

COPY MAILED

OCT 3 1 2008

OFFICE OF PETITIONS

In re Application of	:	
Bretl et al.	:	
Application No. 11/931224	:	
Filing or 371(c) Date: 10/31/2007	:	
Attorney Docket Number:	:	
7174AD CON3 (P01,0517-07)	:	ON PETITION

This is a decision on the Petition to Revive an Unintentionally Abandoned Application Under 37 CFR 1.137(b), filed August 20, 2008.

This Petition is hereby **granted**.

The above-identified application became abandoned for failure to timely and properly reply to the Notice to File Missing Parts of Nonprovisional Application ("Notice"), mailed November 28, 2007. The Notice set a two (2) month period for reply. Extensions of time were available under 37 CFR 1.136(a). No response having been received, the application became abandoned January 29, 2008. A Notice of Abandonment was mailed August 6, 2008.

Applicant files the present petition and drawings in response to the Notice. The petition satisfies the conditions for revival pursuant to the provisions of 37 CFR 1.137(b) in that the petition includes (1) the reply; (2) the petition fee, and (3) the required statement of unintentional delay. Accordingly, the reply is accepted as having been unintentionally delayed.

The application file does not indicate a change of address has been filed in this case, although the address given on the petition differs from the address of record. A change of address should be filed in this case in accordance with MPEP 601.03. A courtesy copy of this decision is being mailed to the address noted on the petition. However, until otherwise instructed, all future correspondence regarding this application will be mailed solely to the address of record.

This application is being referred to the Office of Patent Application Processing ("OPAP") for processing of the reply to the Notice in due course.

Telephone inquiries concerning this decision should be directed to the undersigned at (571) 272-3232.

/Deek L. Woods/
Derek L. Woods
Attorney
Office of Petitions

CC: SCHIFF HARDIN LLP
TREVOR B. JOIKE
6600 SEARS TOWER
CHICAGO, IL 60606

UNITED STATES PATENT AND TRADEMARK OFFICE

UNITED STATES DEPARTMENT OF COMMERCE
United States Patent and Trademark Office
Address: COMMISSIONER FOR PATENTS
P.O. Box 1450
Alexandria, Virginia 22313-1450
www.uspto.gov

APPL NO.	FILING OR 371 (c) DATE	ART UNIT	FIL FEE REC'D	ATTY.DOCKET NO	DRAWINGS	TOT CLMS	IND CLMS
10/931,228	08/31/2004	2154	770	PQH03-062	5	20	3

CONFIRMATION NO. 5130

CORRECTED FILING RECEIPT

OC000000014351431

34225
UNISYS CORP.
25725 JERONIMO ROAD, MS400
MISSION VIEJO, CA 92691

Date Mailed: 11/12/2004

Receipt is acknowledged of this regular Patent Application. It will be considered in its order and you will be notified as to the results of the examination. Be sure to provide the U.S. APPLICATION NUMBER, FILING DATE, NAME OF APPLICANT, and TITLE OF INVENTION when inquiring about this application. Fees transmitted by check or draft are subject to collection. Please verify the accuracy of the data presented on this receipt. **If an error is noted on this Filing Receipt, please write to the Office of Initial Patent Examination's Filing Receipt Corrections, facsimile number 703-746-9195. Please provide a copy of this Filing Receipt with the changes noted thereon. If you received a "Notice to File Missing Parts" for this application, please submit any corrections to this Filing Receipt with your reply to the Notice. When the USPTO processes the reply to the Notice, the USPTO will generate another Filing Receipt incorporating the requested corrections (if appropriate).**

Applicant(s)

Stephen Senh Chieng, Trabuco Canyon, CA;
Carl Terence Drohomereski, Mission Viejo, CA;
Chris B. Legg, Oceanside, CA;
Brenda Ann Moreno, Mission Viejo, CA;
Keith Louis Olshewski, San Jose, CA;
Dennis Arthur Carlson, Huntington Beach, CA;

Power of Attorney:

Mark Starr–28762
Michael Atlass–30606
Lise Rode–37226
Phuong-Quan Hoang–41839

Domestic Priority data as claimed by applicant

Foreign Applications

If Required, Foreign Filing License Granted: 10/27/2004

The country code and number of your priority application, to be used for filing abroad under the Paris Convention, is US10/931,228

Projected Publication Date: Request for Non-Publication Acknowledged

Non-Publication Request: Yes

Early Publication Request: No

Title

Automated failover in a cluster of geographically dispersed server nodes using data replication over a long distance communication link

Preliminary Class

708

LICENSE FOR FOREIGN FILING UNDER
Title 35, United States Code, Section 184
Title 37, Code of Federal Regulations, 5.11 & 5.15

GRANTED

The applicant has been granted a license under 35 U.S.C. 184, if the phrase "IF REQUIRED, FOREIGN FILING LICENSE GRANTED" followed by a date appears on this form. Such licenses are issued in all applications where the conditions for issuance of a license have been met, regardless of whether or not a license may be required as set forth in 37 CFR 5.15. The scope and limitations of this license are set forth in 37 CFR 5.15(a) unless an earlier license has been issued under 37 CFR 5.15(b). The license is subject to revocation upon written notification. The date indicated is the effective date of the license, unless an earlier license of similar scope has been granted under 37 CFR 5.13 or 5.14.

This license is to be retained by the licensee and may be used at any time on or after the effective date thereof unless it is revoked. This license is automatically transferred to any related applications(s) filed under 37 CFR 1.53(d). This license is not retroactive.

The grant of a license does not in any way lessen the responsibility of a licensee for the security of the subject matter as imposed by any Government contract or the provisions of existing laws relating to espionage and the national security or the export of technical data. Licensees should apprise themselves of current regulations especially with respect to certain countries, of other agencies, particularly the Office of Defense Trade Controls, Department of State (with respect to Arms, Munitions and Implements of War (22 CFR 121-128)); the Office of Export Administration, Department of Commerce (15 CFR 370.10 (j)); the Office of Foreign Assets Control, Department of Treasury (31 CFR Parts 500+) and the Department of Energy.

NOT GRANTED

No license under 35 U.S.C. 184 has been granted at this time, if the phrase "IF REQUIRED, FOREIGN FILING LICENSE GRANTED" DOES NOT appear on this form. Applicant may still petition for a license under 37 CFR 5.12, if a license is desired before the expiration of 6 months from the filing date of the application. If 6 months has lapsed from the filing date of this application and the licensee has not received any indication of a secrecy order under 35 U.S.C. 181, the licensee may foreign file the application pursuant to 37 CFR 5.15(b).

UNITED STATES PATENT AND TRADEMARK OFFICE

UNITED STATES DEPARTMENT OF COMMERCE
United States Patent and Trademark Office
Address: COMMISSIONER FOR PATENTS
P.O. Box 1450
Alexandria, Virginia 22313-1450
www.uspto.gov

PERRY + CURRIER INC.
(FOR RIM)
1300 YONGE STREET
SUITE 500
TORONTO, ON M4T-1X3
CANADA

Mail Date: 04/20/2010

Applicant	: Michael Knowles	: DECISION ON REQUEST FOR
Patent Number	: 7650377	: RECALCULATION of PATENT
Issue Date	: 01/19/2010	: TERM ADJUSTMENT IN VIEW
Appliction No	: 10/931,268	: OF WYETH AND NOTICE OF INTENT TO
Filed	: 08/31/2004	: ISSUE CERTIFICATE OF CORRECTION
		:

The Request for Recalculation is **GRANTED** to the extent indicated.

The patent term adjustment has been determined to be **1541** days. The USPTO will *sua sponte* issue a certificate of correction reflecting the amount of PTA days determined by the recalculation.

Prior to the issuance of the certificate of correction, the USPTO will afford patentee an opportunity to be heard and request reconsideration. Accordingly, patentee has **one month or thirty (30) days**, whichever is longer, to file a request for reconsideration of this patent term adjustment calculation. See 35 U.S.C. 154(b)(3)(B)(ii) and 37 CFR 1.322(a)(4). No extensions of time will be granted under 37 CFR 1.136.

Patentee should use document code PET.OP if electronically filing a request for reconsideration of this patent term adjustment calculation. The patentee must also include the information required by 37 CFR 1.705(b)(2) and the fee required by 37 CFR 1.18(e). If patentee does not file a timely request for reconsideration of this patent term adjustment calculation including the information required by 37 CFR 1.705(b)(2) and the fee required by 37 CFR 1.18(e), the USPTO will issue a certificate of correction reflecting the PTA determination noted above.

Patentee should be aware that in order to preserve the right to review in the United States District Court for the District of Columbia of the USPTO patent term adjustment determination, patentee must ensure that he or she also take the steps required under 35 U.S.C. 154(b)(4)(A) in a timely manner. Nothing in the request for recalculation should be construed as providing an alternative time frame for commencing a civil action under 35 U.S.C. 154(b)(4)(A).

Any questions concerning this decision should be directed to the Office of Patent Legal Administration at 571-272-7702.

UNITED STATES PATENT AND TRADEMARK OFFICE

COMMISSIONER FOR PATENTS
UNITED STATES PATENT AND TRADEMARK OFFICE
P.O. BOX 1450
ALEXANDRIA, VA 22313-1450
WWW.USPTO.GOV

Paper No.

ECKERT SEAMANS CHERIN & MELLOTT
600 GRANT STREET
44TH FLOOR
PITTSBURGH PA 15219

COPY MAILED

MAY 12 2008

OFFICE OF PETITIONS

In re Application of Vadim Fux et al. Application No. 10/931,276 Filed: August 31, 2004 Attorney Docket No.: 291010-00092 Title: HANDHELD ELECTRONIC DEVICE WITH TEXT DISAMBIGUATION	DECISION ON PETITION PURSUANT TO 37 C.F.R. § 1.181

This is a decision on the petition filed on March 6, 2008, pursuant to 37 C.F.R. § 1.181, requesting that the holding of abandonment in the above-identified application be withdrawn.

The petition pursuant to 37 C.F.R. § 1.181 is **DISMISSED**.

BACKGROUND

The above-identified application became abandoned for failure to reply within the meaning of 37 C.F.R § 1.113 in a timely manner to the final Office action mailed May 21, 2007, which set a shortened statutory period for reply of three months. No response was received, and no extensions of time under the provisions of 37 C.F.R §1.136(a) were obtained. Accordingly, the above-identified application became abandoned on August 22, 2007. A notice of abandonment was mailed on January 9, 2008.

RELEVANT PORTION OF THE MPEP

Section 711.03(c)(I)(A) sets forth, *in toto*:

> In *Delgar v. Schulyer*, 172 USPQ 513 (D.D.C. 1971), the court decided that the Office should mail a new Notice of Allowance in view of the evidence presented in support of the contention that the applicant's representative did not receive the original Notice of Allowance. Under the reasoning of *Delgar*, an allegation that an Office action was never received may be considered in a petition to withdraw the holding of abandonment. If adequately supported, the Office may grant the petition to withdraw the holding of abandonment and remail the Office action. That is, the reasoning of Delgar is applicable regardless of whether an application is held abandoned for failure to timely pay the issue fee (35 U.S.C. 151) or for failure to prosecute (35 U.S.C. 133).
>
> To minimize costs and burdens to practitioners and the Office, the Office has modified the showing required to establish nonreceipt of an Office action. The showing required to establish nonreceipt of an Office communication must include a statement from the practitioner describing the system used for recording an Office action received at the correspondence address of record with the USPTO. The statement should establish that the docketing system is sufficiently reliable. It is expected that the record would include, but not be limited to, the application number, attorney docket number, the mail date of the Office action and the due date for the response.
>
> Practitioner must state that the Office action was not received at the correspondence address of record, and that a search of the practitioner's record(s), including any file jacket or the equivalent, and the application contents, indicates that the Office action was not received. A copy of the record(s) used by the practitioner where the non-received Office action would have been entered had it been received is required.
>
> A copy of the practitioner's record(s) required to show non-receipt of the Office action should include the master docket for the firm. That is, if a three month period for reply was set in the nonreceived Office action, a copy of the master docket report showing all replies docketed for a date three months from the mail date of the nonreceived Office action must be submitted as documentary proof of nonreceipt of the Office action. If no such master docket exists, the practitioner should so state and provide other evidence such as, but not limited to, the following: the application file jacket; incoming mail log; calendar; reminder system; or the individual docket record for the application in question.
>
> The showing outlined above may not be sufficient if there are circumstances that point to a conclusion that the Office action may have been lost after receipt rather than a conclusion that the Office action was lost in the mail (e.g., if the practitioner has a history of not receiving Office actions).

> Evidence of nonreceipt of an Office communication or action (e.g., Notice of Abandonment or an advisory action) other than that action to which reply was required to avoid abandonment would not warrant withdrawal of the holding of abandonment. Abandonment takes place by operation of law for failure to reply to an Office action or timely pay the issue fee, not by operation of the mailing of a Notice of Abandonment. See *Lorenz v. Finkl*, 333 F.2d 885, 889-90, 142 USPQ 26, 29-30 (CCPA 1964); *Krahn v. Commissioner*, 15 USPQ2d 1823, 1824 (E.D. Va 1990); *In re Application of Fischer*, 6 USPQ2d 1573, 1574 (Comm'r Pat. 1988).

ANALYSIS

With this petition, Petitioner has:

- provided a declaration of facts from Ms. Novosel, a Docket Administrator for Petitioner's law firm;
- asserted that the mailing was not received;
- described the system that is used for recording an Office action received at the correspondence address of record with the USPTO;
- established that the docketing system is sufficiently reliable, and;
- stated that the Office action was not received at the correspondence address of record, and that a search of the practitioner's record(s), including any file jacket or the equivalent, and the application contents, indicates that the Office action was not received.

Petitioner has also provided copies of several docket records. However, exhibit 1 has been characterized as Ms. Novosel as "docket reports…for all replies docketed for August 21, 2007 (emphasis added), the date a reply to the Final Office Action was due." However, a review of Exhibit 1 reveals that it consists of a docket report for replies that were docketed for November 21, 2007. As such, it appears that either the declaration of facts contains an erroneous assertion, or Petitioner included a print-out of the wrong docket report with this petition.

CONCLUSION

Any reply must be submitted within **TWO MONTHS** from the mail date of this decision. Extensions of time under 37 C.F.R. § 1.136(a) are permitted. The reply should include a cover letter entitled "Renewed Petition pursuant to 37 C.F.R. § 1.181(a)". This is not a final agency action within the meaning of 5 U.S.C § 704.

The renewed petition should indicate in a prominent manner that the attorney handling this matter is Paul Shanoski, and may be

submitted by mail[1], hand-delivery[2], or facsimile[3]. Registered users of EFS-Web may alternatively submit a response to this decision via EFS-Web[4].

If responding by mail, Petitioner is advised not to place the undersigned's name on the envelope. Only the information that appears in the footnote should be included - adding anything else to the address will delay the delivery of the response to the undersigned.

Telephone inquiries regarding *this decision* should be directed to the undersigned at (571) 272-3225[5]. All other inquiries concerning examination procedures should be directed to the Technology Center.

/Paul Shanoski/
Paul Shanoski
Senior Attorney
Office of Petitions

---

1 Mail Stop Petition, Commissioner for Patents, United States Patent and Trademark Office, P.O. Box 1450, Alexandria, VA, 22313-1450.
2 Customer Window, Randolph Building, 401 Dulaney Street, Alexandria, VA, 22314.
3 (571) 273-8300- please note this is a central facsimile number.
4 https://sportal.uspto.gov/authenticate/authenticateuserlocalepf.html
5 Petitioner will note that all practice before the Office should be in writing, and the action of the Office will be based exclusively on the written record in the Office. See 37 C.F.R. § 1.2. As such, Petitioner is reminded that no telephone discussion may be controlling or considered authority for any of Petitioner's further action(s).

UNITED STATES PATENT AND TRADEMARK OFFICE

COMMISSIONER FOR PATENTS
UNITED STATES PATENT AND TRADEMARK OFFICE
P.O. BOX 1450
ALEXANDRIA, VA 22313-1450
WWW.USPTO.GOV

Paper No.

ECKERT SEAMANS CHERIN & MELLOTT
600 GRANT STREET
44TH FLOOR
PITTSBURGH PA 15219

COPY MAILED

AUG 04 2008

In re Application of Vadim Fux et al. Application No. 10/931,276 Filed: August 31, 2004 Attorney Docket No.: 291010-00092 Title: HANDHELD ELECTRONIC DEVICE WITH TEXT DISAMBIGUATION	DECISION ON RENEWED PETITION PURSUANT TO 37 C.F.R. § 1.181

This is a decision on the renewed petition filed on July 9, 2008, pursuant to 37 C.F.R. § 1.181, requesting that the holding of abandonment in the above-identified application be withdrawn.

This renewed petition pursuant to 37 C.F.R. § 1.181 is **GRANTED**.

BACKGROUND AND PROCEDURAL HISTORY

The above-identified application became abandoned for failure to reply within the meaning of 37 C.F.R § 1.113 in a timely manner to the final Office action mailed May 21, 2007, which set a shortened statutory period for reply of three months. No response was received, and no extensions of time under the provisions of 37 C.F.R § 1.136(a) were obtained. Accordingly, the above-identified application became abandoned on August 22, 2007. A notice of abandonment was mailed on January 9, 2008.

An original petition pursuant to 37 C.F.R. § 1.181 was filed on March 6, 2008, and was dismissed via the mailing of a decision on May 12, 2008. The decision indicated, in pertinent part:

> Petitioner has also provided copies of several docket records. However, exhibit 1 has been characterized as Ms. Novosel as "docket reports…for all replies docketed for August 21, 2007 (emphasis added), the date a reply to the Final Office Action was due." However, a review of Exhibit 1 reveals that it consists of

> a docket report for replies that were docketed for November 21, 2007. As such, it appears that either the declaration of facts contains an erroneous assertion, or Petitioner included a print-out of the wrong docket report with this petition.
>
> Emphases included.
>
> Decision on original petition, page 3.

ANALYSIS

With this renewed petition, Petitioner has included, *inter alia*, the master docket that shows all replies docketed for August 21, 2007, and it is noted that the final Office action of May 21, 2007 does not appear thereon.

Hence, Petitioner has established that the final Office action of May 21, 2007 was not received.

CONCLUSION

The Technology Center will be notified of this decision. The Technology Center's support staff will **re-mail the final Office action of May 21, 2007, and will set a new period for response.**

Petitioner may find it beneficial to view Private PAIR within a fortnight of the present decision to ensure that the withdrawal of the holding of abandonment has been acknowledged by the Technology Center in response to this decision. It is noted that all inquiries with regard to any failure of that change in status should be directed to the Technology Center where that change of status must be effected - **the Office of Petitions cannot effectuate a change of status.**

Telephone inquiries **regarding this decision** should be directed to the undersigned at (571) 272-3225[1]. All other inquiries concerning examination procedures or status of the application should be directed to the Technology Center.

/Paul Shanoski/
Paul Shanoski
Senior Attorney
Office of Petitions

---

1 Petitioner will note that all practice before the Office should be in writing, and the action of the Office will be based exclusively on the written record in the Office. See 37 C.F.R. § 1.2. As such, Petitioner is reminded that no telephone discussion may be controlling or considered authority for any further action(s) of Petitioner.

UNITED STATES PATENT AND TRADEMARK OFFICE

UNITED STATES DEPARTMENT OF COMMERCE
United States Patent and Trademark Office
Address: COMMISSIONER FOR PATENTS
P.O. Box 1450
Alexandria, Virginia 22313-1450
www.uspto.gov

RIM/FINNEGAN
901 New York Avenue NW
Washington, DC 20001

Mail Date: 04/20/2010

Applicant	: Vadim Fux	: DECISION ON REQUEST FOR
Patent Number	: 7646375	: RECALCULATION of PATENT
Issue Date	: 01/12/2010	: TERM ADJUSTMENT IN VIEW
Appliction No	: 10/931,276	: OF WYETH AND NOTICE OF INTENT TO
Filed	: 08/31/2004	: ISSUE CERTIFICATE OF CORRECTION
		:

The Request for Recalculation is **GRANTED** to the extent indicated.

The patent term adjustment has been determined to be **1154** days. The USPTO will *sua sponte* issue a certificate of correction reflecting the amount of PTA days determined by the recalculation.

Prior to the issuance of the certificate of correction, the USPTO will afford patentee an opportunity to be heard and request reconsideration. Accordingly, patentee has **one month or thirty (30) days**, whichever is longer, to file a request for reconsideration of this patent term adjustment calculation. See 35 U.S.C. 154(b)(3)(B)(ii) and 37 CFR 1.322(a)(4). No extensions of time will be granted under 37 CFR 1.136.

Patentee should use document code PET.OP if electronically filing a request for reconsideration of this patent term adjustment calculation. The patentee must also include the information required by 37 CFR 1.705(b)(2) and the fee required by 37 CFR 1.18(e). If patentee does not file a timely request for reconsideration of this patent term adjustment calculation including the information required by 37 CFR 1.705(b)(2) and the fee required by 37 CFR 1.18(e), the USPTO will issue a certificate of correction reflecting the PTA determination noted above.

Patentee should be aware that in order to preserve the right to review in the United States District Court for the District of Columbia of the USPTO patent term adjustment determination, patentee must ensure that he or she also take the steps required under 35 U.S.C. 154(b)(4)(A) in a timely manner. Nothing in the request for recalculation should be construed as providing an alternative time frame for commencing a civil action under 35 U.S.C. 154(b)(4)(A).

Any questions concerning this decision should be directed to the Office of Patent Legal Administration at 571-272-7702.

UNITED STATES PATENT AND TRADEMARK OFFICE

COMMISSIONER FOR PATENTS
UNITED STATES PATENT AND TRADEMARK OFFICE
P.O. BOX 1450
ALEXANDRIA, VA 22313-1450
www.uspto.gov

BRINKS HOFER GILSON & LIONE
P.O. BOX 10395
CHICAGO IL 60610

COPY MAILED

AUG 15 2007

OFFICE OF PETITIONS

In re :
Application No. 10/931,283 :
Moss et al. : LETTER REGARDING
Filed: August 31, 2004 : PATENT TERM ADJUSTMENT
Attorney Docket No. 08285-00706:

This is in response to the "REQUEST FOR REVIEW OF PATENT TERM ADJUSTMENT," filed July 12, 2007. Applicants disclose that the patent term adjustment pursuant to 35 U.S.C. 154(b) of 218 days indicated on the Determination of Patent Term Adjustment, PTOL-85, may extend the term of the patent by too many days.

The request for review of the patent term adjustment (PTA) is **DISMISSED** to the extent that it requests correction of the patent term adjustment.

On April 12, 2007, the Office mailed the Determination of Patent Term Adjustment under 35 U.S.C. 154(b) in the above-identified application. The Notice stated that the patent term adjustment to date is 374 days, not 218 days as stated by applicants. Applicants state no basis for their assertion that the PTA may extend the term of the patent by too many days.

A review of the application history supports a conclusion that the initial Determination of Patent Term Adjustment is correct. It is noted that a terminal disclaimer was filed in this application on February 8, 2007. This has no effect on the determination of patent term adjustment set forth on any patent issuing from this application. 35 U.S.C. 154(b)(2)(B) provides that:

> No patent the term of which has been disclaimed beyond a specified date may be adjusted under this section beyond the expiration date specified in the disclaimer.

37 CFR § 1.703(g) provides that:

> No patent, the term of which has been disclaimed beyond a specified date, shall be adjusted under § 1.702 and this section beyond the expiration date specified in the disclaimer.

The provisions of § 154(b), for adjustment due to examination delay, apply to original applications, other than designs, filed on or after May 29, 2000. The Office calculates patent term adjustment for examination delay in all eligible applications. In calculating the patent term adjustment, the Office does not differentiate between applications that have terminal disclaimers and those that do not. Nor does the Office undertake the burdensome task of reviewing every application with a terminal disclaimer to determine if the patent term adjustment accorded would adjust the term beyond the expiration date specified in the disclaimer.

Rather, on issuance of the application, in compliance with 35 U.S.C. 154(b) and 37 CFR § 1.703(g), it is indicated in the patent that the patent term adjustment indicated therein is subject to any disclaimer. Moreover, it is also stated therein that the patent is subject to a terminal disclaimer.

As this letter was submitted as an attempt to advise the Office of an error in Applicants' favor, the Office will not assess the $200.00 application fee under 37 CFR 1.705(b). The Office thanks applicants for their good faith and candor in bringing this to the attention of the Office.

Telephone inquiries specific to this matter should be directed to the undersigned at (571) 272-3219.

Nancy Johnson
Senior Petitions Attorney
Office of Petitions

UNITED STATES PATENT AND TRADEMARK OFFICE

Commissioner for Patents
United States Patent and Trademark Office
P. O. Box 1450
Alexandria, VA 22313-1450
www.uspto.gov

NOVARTIS VACCINES AND DIAGNOSTICS INC.
CORPORATE INTELLECTUAL PROPERTY R 338
P.O. BOX 8097
EMERYVILLE, CA 94662-8097

COPY MAILED

APR 0 2 2007

OFFICE OF PETITIONS

In re Application of :
W. Michael Kavanaugh et al :
Application No. 10/931,285 :
Filed: August 31, 2004 :
Attorney Docket No. PP-001615.0006

ON PETITION

This is a decision on the petition, filed March 30, 2007 under 37 CFR 1.313(c)(2) to withdraw the above-identified application from issue after payment of the issue fee.

The petition is **GRANTED**.

The above-identified application is withdrawn from issue for consideration of a submission under 37 CFR 1.114 (request for continued examination). See 37 CFR 1.313(c)(2).

Petitioner is advised that the issue fee paid on January 22, 2007 in the above-identified application cannot be refunded. If, however, the above-identified application is again allowed, petitioner may request that it be applied towards the issue fee required by the new Notice of Allowance.[1]

The file does not indicate a change of address has been submitted, although the address given on the petition differs from the address of record. If appropriate, a change of address should be filed in accordance with MPEP 601.03. A courtesy copy of this decision is being mailed to the address given on the petition; however, the Office will mail all future correspondence solely to the address of record.

Telephone inquiries should be directed to Irvin Dingle at (571) 272-3210.

This matter is being referred to Technology Center AU 1644 for processing of the request for continued examination under 37 CFR 1.114 and for consideration of the amendment.

Irvin Dingle
Petitions Examiner
Office of Petitions

cc: FISH & RICHARDSON P.C.
P.O. BOX 1022
MINNEAPOLIS, MN 55440-1022

---

[1] The request to apply the issue fee to the new Notice may be satisfied by completing and returning the new Issue Fee Transmittal Form PTOL-85(b), which includes the following language thereon: Commissioner for Patents is requested to apply the Issue Fee and Publication Fee (if any) or re-apply any previously paid issue fee to the application identified above. Petitioner is advised that, whether a fee is indicated as being due or not, the Issue Fee Transmittal Form **must** be completed and timely submitted to avoid abandonment. Note the language in bold text on the first page of the Notice of Allowance and Fee(s) Due (PTOL-85).

UNITED STATES PATENT AND TRADEMARK OFFICE

Commissioner for Patents
United States Patent and Trademark Office
P.O. Box 1450
Alexandria, VA 22313-1450
www.uspto.gov

BRIAN ROFFE, ESQ.
11 Sunrise Plaza, Suite 303
Valley Stream, NY 11580-6170

SEP 2 0 2005

In re Application of:	:	
BREED, et al.	:	DECISION ON PETITION
Serial No.: 10/931,288	:	TO MAKE SPECIAL
Filed: August 31, 2004	:	
Docket No: AT1-345	:	

This is a decision on the petition under 37 C.F.R. § 1.102(c), filed July 18, 2005, to make the above-identified application special.

Petitioner requests that the above-identified application be made special under the accelerated examination procedure set forth in the Manual of Patent Examining Procedure (M.P.E.P.) § 708.02, Section IV: Applicant's Age.

A grantable petition to make special under 37 C.F.R. § 1.102, and in accordance with M.P.E.P. § 708.02, Section IV, must include evidence showing that the applicant is sixty five (65) years of age or more. No fee is required for this petition.

The petition includes a copy of the passport from the inventor, David S. Breed, showing that he is sixty-five (65) years of age or more.

Accordingly, the petition is GRANTED.

After allowance, this application will be given priority for printing. See M.P.E.P. § 1309.

Inquiries regarding this decision should be directed to Edward Westin at (571) 272-1638.

Edward Westin

Edward Westin, Special Programs Examiner
Technology Center 2800
Semiconductors, Electrical and Optical
Systems and Components

UNITED STATES PATENT AND TRADEMARK OFFICE

UNITED STATES DEPARTMENT OF COMMERCE
United States Patent and Trademark Office
Address: COMMISSIONER FOR PATENTS
P.O. Box 1450
Alexandria, Virginia 22313-1450
www.uspto.gov

ECKERT SEAMANS CHERIN & MELLOTT
600 GRANT STREET
44TH FLOOR
PITTSBURGH, PA 15219

Mail Date: 04/21/2010

Applicant	: Jianwei (Oliver) Yuan	: DECISION ON REQUEST FOR
Patent Number	: 7636891	: RECALCULATION of PATENT
Issue Date	: 12/22/2009	: TERM ADJUSTMENT IN VIEW
Appliction No	: 10/931,290	: OF WYETH AND NOTICE OF INTENT TO
Filed	: 08/31/2004	: ISSUE CERTIFICATE OF CORRECTION
		:

The Request for Recalculation is **GRANTED** to the extent indicated.

The patent term adjustment has been determined to be **1256** days. The USPTO will *sua sponte* issue a certificate of correction reflecting the amount of PTA days determined by the recalculation.

Prior to the issuance of the certificate of correction, the USPTO will afford patentee an opportunity to be heard and request reconsideration. Accordingly, patentee has **one month or thirty (30) days**, whichever is longer, to file a request for reconsideration of this patent term adjustment calculation. See 35 U.S.C. 154(b)(3)(B)(ii) and 37 CFR 1.322(a)(4). No extensions of time will be granted under 37 CFR 1.136.

Patentee should use document code PET.OP if electronically filing a request for reconsideration of this patent term adjustment calculation. The patentee must also include the information required by 37 CFR 1.705(b)(2) and the fee required by 37 CFR 1.18(e). If patentee does not file a timely request for reconsideration of this patent term adjustment calculation including the information required by 37 CFR 1.705(b)(2) and the fee required by 37 CFR 1.18(e), the USPTO will issue a certificate of correction reflecting the PTA determination noted above.

Patentee should be aware that in order to preserve the right to review in the United States District Court for the District of Columbia of the USPTO patent term adjustment determination, patentee must ensure that he or she also take the steps required under 35 U.S.C. 154(b)(4)(A) in a timely manner. Nothing in the request for recalculation should be construed as providing an alternative time frame for commencing a civil action under 35 U.S.C. 154(b)(4)(A).

Any questions concerning this decision should be directed to the Office of Patent Legal Administration at 571-272-7702.

UNITED STATES PATENT AND TRADEMARK OFFICE

UNITED STATES DEPARTMENT OF COMMERCE
United States Patent and Trademark Office
Address: COMMISSIONER FOR PATENTS
P.O. Box 1450
Alexandria, Virginia 22313-1450
www.uspto.gov

ECKERT SEAMANS CHERIN & MELLOTT
600 GRANT STREET
44TH FLOOR
PITTSBURGH, PA 15219

Mail Date: 05/18/2010

Applicant : Jianwei (Oliver) Yuan
Patent Number : 7636891
Issue Date : 12/22/2009
Application No : 10/931,290
Filed : 08/31/2004

: NOTICE CONCERNING IMPROPER
: CALCULATION OF PATENT TERM
: ADJUSTMENT BASED UPON USPTO
: IMPROPERLY MEASURING REDUCTION
: PERIOD UNDER 37 CFR 1.704(c)(10).

The United States Patent and Trademark Office (USPTO) discovered that in processing the recent recalculation decisions mailed in response to patentee's filed Request for Recalculation of Patent Term Adjustment in view of Wyeth, the USPTO improperly measured the reduction period for reductions under 37 CFR 1.704(c)(10). Pursuant to 37 CFR 1.704(c)(10), patentee's reduction begins on the date of filing the amendment under 37 CFR 1.312 ("1.312 amendment") or other related paper and ends on the date that the Office mails a response to the filing of the 1.312 amendment or other paper. It has been discovered that during the recalculation, the calculation failed to the limit the reduction to the mail date of the response to the 1.312 amendment or other paper. Accordingly, patentee's reductions were greater than warranted.

This notice **VACATES** the previous GRANTED request for recalculation and provides patentee with a revised GRANTED recalculation.

The patent term adjustment has been determined to be **1284** days. The USPTO will *sua sponte* issue a certificate of correction reflecting the amount of patent term adjustment (PTA) days determined by the recalculation.

Prior to the issuance of the certificate of correction, the USPTO will afford patentee an opportunity to be heard and request reconsideration. Accordingly, patentee has **one month or thirty (30) days** from the mail date of this notice, whichever is longer, to file a request for reconsideration of this PTA calculation. See 35 U.S.C. § 154(b)(3)(B)(ii) and 37 CFR 1.322(a)(4).

Patentee should use document code PET.OP if electronically filing a request for reconsideration of this PTA calculation. The patentee must also include the information required by 37 CFR 1.705(b)(2), and the fee required by 37 CFR 1.18(e). If patentee does not file a timely request for reconsideration of this PTA calculation, including the information required by 37 CFR 1.705(b)(2) and the fee required by 37 CFR 1.18(e), the USPTO will issue a certificate of correction reflecting the PTA determination noted above.

Patentee should be aware that in order to preserve the right of review of the USPTO's PTA determination in the United States District Court for the District of Columbia, patentee must ensure that the steps required under 35 U.S.C. § 154 (b)(4) are taken in a timely manner. Nothing in the request for recalculation should be construed as providing an alternative time frame for commencing a civil action under 35 U.S.C. § 154(b)(4).

UNITED STATES PATENT AND TRADEMARK OFFICE

Commissioner for Patents
United States Patent and Trademark Office
P.O. Box 1450
Alexandria, VA 22313-1450
www.uspto.gov

NATH & ASSOCIATES
112 South West Street
Alexandria VA 22314

COPY MAILED

MAR 2 2 2007

OFFICE OF PETITIONS

ON PETITION

In re Application of :
Peter J. Ianniello et al. :
Application No. 10/931,294 :
Filed: September 1, 2004 :
Attorney Docket No. 29641-408904 :

This is a decision on the petition under 37 CFR 1.137(b), filed August 23, 2006, to revive the above-identified application.

The petition is **GRANTED**.

The application became abandoned for failure to reply in a timely manner to the non-final Office action mailed, July 18, 2005, which set a shortened statutory period for reply of three (3) months. No extensions of time under the provisions of 37 CFR 1.136(a) was obtained. Accordingly, the application became abandoned on October 19, 2005.

The petition satisfies the requirements of 37 CFR 1.137(b) in that petitioner has supplied (1) the reply in the form of an Amendment; (2) the petition fee of $750; and (3) an adequate statement of unintentional delay.

It is not apparent whether the person signing the statement of unintentional delay was in a position to have firsthand or direct knowledge of the facts and circumstances of the delay at issue. Nevertheless, such statement is being treated as having been made as the result of a reasonable inquiry into the facts and circumstances of such delay. See 37 CFR 10.18(b) and Changes to Patent Practice and Procedure; Final Rule Notice, 62 Fed. Reg. 53131, 53178 (October 10, 1997), 1203 Off. Gaz. Pat. Office 63, 103 (October 21, 1997). In the event that such an inquiry has not been made, petitioner must make such an inquiry. If such inquiry results in the discovery that it is not correct that the entire delay in filing the required reply from the due date for the reply until the filing of a grantable petition pursuant to 37 CFR 1.137(b) was unintentional, petitioner must notify the Office.

Telephone inquiries concerning this decision should be directed to Terri Williams at (571) 272-2991.

The application file is being referred to Technology Art Unit 3671 for appropriate action on the concurrently filed amendment.

Liana Walsh
Petitions Examiner
Office of Petitions

UNITED STATES PATENT AND TRADEMARK OFFICE

Commissioner for Patents
United States Patent and Trademark Office
P.O. Box 1450
Alexandria, VA 22313-1450
www.uspto.gov

COPY MAILED

JUN 13 2007

OFFICE OF PETITIONS

QUALCOMM INCORPORATED
5775 MOREHOUSE DR.
SAN DIEGO, CA 92121

In re Application of Taylor et al. :
Application No. 10/931,308 : Decision on Petition
Filing Date: August 31, 2004 :
Attorney Docket No. 040366 :

This decision is in response to the petition under 37 CFR 1.59 filed January 16, 2007. The petition will also be treated as a petition under 37 CFR 1.182.

The petition under 37 CFR 1.59 is **dismissed**.

The petition under 37 CFR 1.182 is **dismissed**.

Facts:

An assignment was recorded was incorrectly associated with the instant application as a result of an error in the application number.

Petitioner seeks to expunge the incorrectly recorded assignment.

The petition under 37 CFR 1.59:

Rule 59 applies when an applicant requests a portion of the application file be expunged. Petitioner requests a portion of the assignment record be expunged. Therefore, the petition treated properly as a petition under 37 CFR 1.182.

A petition fee has not been charged for the petition under 37 CFR 1.59.

The petition under 37 CFR 1.182:

MPEP 323 discusses the correction of errors in an assignment document. MPEP 323.01(d) discussed the criteria to have an unintentionally filed paper expunged from assignment records.

MPEP 323.01(d) states,

> Petitions to correct, modify or "expunge" assignment records are rarely granted. Such petitions are granted only if the petitioner can prove that:

(A) the normal corrective procedures outlined in MPEP § 323.01(a) through § 323.01(c) will not provide the petitioner with adequate relief; and
(B) the integrity of the assignment records will not be affected by granting the petition.

Even if a petition to "expunge" a document is granted with respect to a particular application or patent, the image of the recorded document will remain in the records of the Assignment Services Division at the same reel and frame number, and the image will appear when someone views that reel and frame number. The Office will, however, delete the links to the application or patent that was the subject of the petition, so that no information about the recorded document will appear when someone searches for that application or patent number in the Assignment Historical Database.

As to item (A) above, petitioner has failed to demonstrate relief cannot be obtained using the normal corrective procedures outlined in MPEP §§ 323.01(a) through 323.01(c).

MPEP 323.01(a) states, with emphasis added,

A party who wishes to correct a typographical error on a recorded cover sheet must submit the following to the Assignment Services Division:
(A) a copy of the originally recorded assignment document (or other document affecting title);
(B) a corrected cover sheet; and
(C) the required fee for each application or patent to be corrected (37 CFR 3.41).
See 37 CFR 3.34.

The party requesting correction should also submit a copy of the original cover sheet, to facilitate comparison of the corrected cover sheet with the originally recorded document. The party filing the corrected cover sheet should check the box titled "Other" in the area of the sheet requesting "Nature of Conveyance," and indicate that the submission is to correct an error in a cover sheet previously recorded. The party should also identify the reel and frame numbers (if known), and the nature of the correction (e.g., "correction to the spelling of assignor 's name" **or "correction of application number** or patent number").

The Office will then compare the corrected cover sheet with the original cover sheet and the originally recorded assignment document (or other document affecting title) to determine whether the correction is typographical in nature. If the error is typographical in nature, the Assignment Services Division will record the corrected cover sheet and correct the Assignment Historical Database.

Since relief can be obtained pursuant to MPEP 323.01(a), the petition is dismissed.

The petition fee of $400 has been charged to petitioner's deposit account.

Any request for reconsideration must be submitted within TWO (2) MONTHS from the mail date of this decision. No further petition fee is required for the request. Extensions of time under 37 CFR 1.136(a) are NOT permitted. The reconsideration request should include a cover letter entitled "Renewed Petition under 37 CFR 1.182."

Further correspondence with respect to this matter should be addressed as follows:

By mail: Mail Stop Petition
Commissioner for Patents
P.O. Box 1450
Alexandria, VA 22313-1450

By facsimile: (571) 273-8300
Attn: Office of Petitions

By hand: U.S. Patent and Trademark Office
Customer Service Window
Randolph Building
401 Dulany Street
Alexandria, VA 22314

Telephone inquiries regarding this communication should be directed to Petitions Attorney Steven Brantley at (571) 272-3203.

Charles Steven Brantley
Senior Petitions Attorney
Office of Petitions

UNITED STATES PATENT AND TRADEMARK OFFICE

COMMISSIONER FOR PATENTS
UNITED STATES PATENT AND TRADEMARK OFFICE
P.O. BOX 1450
ALEXANDRIA, VA 22313-1450
www.uspto.gov

COPY MAILED

JUL 20 2007

OFFICE OF PETITIONS

ROBERT D. VARITZ
4915 S.E. 33RD PLACE
PORTLAND, OR 97202

In re Application of
Douglas J. Tweet
Application No. 10/931,327
Filed: August 31, 2004
Attorney Docket No. SLA0776

ON PETITION

This is a decision in response to the petition, filed March 19, 2007, to revive the above-identified application under the provisions of 37 CFR 1.137(b).

The petition is **GRANTED**.

The application became abandoned for a failure to reply in a timely manner to a non-final Office action mailed June 30, 2006. A Notice of Abandonment was mailed on March 14, 2007. In response, on March 19, 2007, the present petition was filed.

The petition satisfies the conditions for revival pursuant to the provisions of 37 CFR 1.137(b) in that petitioner has supplied (1) the reply in the form of an amendment; (2) the petition fee of $1,500; and (3) an adequate statement of unintentional delay.

The application is being referred to Technology Center AU 2822 for consideration of the amendment filed March 19, 2007.

Telephone inquiries concerning this decision should be directed to the undersigned at (571) 272-3204. Inquiries relating to further prosecution should be directed to the Technology Center.

Sherry D. Brinkley
Petitions Examiner
Office of Petitions

UNITED STATES PATENT AND TRADEMARK OFFICE

Commissioner for Patents
United States Patent and Trademark Office
P.O. Box 1450
Alexandria, VA 22313-1450
www.uspto.gov

ELIZABETH R. HALL
1722 MARYLAND STREET
HOUSTON TX 77006

COPY MAILED

AUG 3 1 2006

OFFICE OF PETITIONS

In re Application of	:	
Goldknopf, et al.	:	
Application No. 10/931,333	:	DECISION ON PETITION
Filed: September 1, 2004	:	TO WITHDRAW
Attorney Docket No. PROT-P011US	:	FROM RECORD
	:	

This is a decision on the Request to Withdraw as attorney or agent of record under 37 C.F.R. § 1.36(b), filed May 26, 2006.

The request is **APPROVED**.

A grantable request to withdraw as attorney/agent of record must be signed by every attorney/agent seeking to withdraw or contain a clear indication that one attorney is signing on behalf of another/others. A request to withdraw will not be approved unless at least 30 (thirty) days would remain between the date of approval and the later of the expiration date of a time to file a response or the expiration date of the maximum time period which can be extended under 37 C.F.R. § 1.136(a).

The request was signed by Elizabeth R. Hall, on behalf of all attorneys of record who are associated with customer No. 34453.

All attorneys/agents associated with the Customer Number 34453 have been withdrawn.

Applicant is reminded that there is no attorney of record at this time.

The request to change the correspondence of record is not acceptable as the requested correspondence address is not that of: (1) the first named signing inventor; or (2) an intervening assignee of the entire interest under 37 C.F.R 3.71. All future communications from the Office will be directed to the first named signing inventor at the first copied address below until otherwise properly notified by the applicant.

In order to request or take action in a patent matter, the assignee must establish its ownership of the patent to the satisfaction of the Director. In this regard, a Statement under 37 CFR 3.73(b) must have either: (i) documentary evidence of a chain of title from the original owner to the assignee (*e.g.*, copy of an executed assignment), and a statement affirming that the documentary evidence of the chain of title from the original owner to the assignee was or concurrently is being submitted for recordation pursuant to § 3.11; or (ii) a statement specifying where documentary evidence of a chain of title from the original owner to the assignee is recorded in the assignment records of the Office (*e.g.*, reel and frame number).

Telephone inquiries concerning this decision should be directed to April Wise at 571-272-1642.

April M. Wise
Petitions Examiner
Office of Petitions

cc: IRA L GOLDKNOPF
42 BRUSHWOOD COURT
THE WOODLANDS, TX 77380

cc: POWER3 MEDICAL PRODUCTS, INC.
3400 RESEARCH FOREST DRIVE
SUITE B2-3
THE WOODLANDS, TX 77381

UNITED STATES PATENT AND TRADEMARK OFFICE

Commissioner for Patents
United States Patent and Trademark Office
P.O. Box 1450
Alexandria, VA 22313-1450
www.uspto.gov

MAY -6 2005

In re Application of Richard S. Chomik Serial No. 10/931,337 Filed: September 1, 2004 For: AUTOMATED TWIST DIAPER DISPOSAL APPARATUS	: : : : : :	DECISION ON PETITION TO WITHDRAW AS ATTORNEY

By papers filed on February 11, 2005, counsel has petitioned to withdraw as attorney of record in this application.

The petition is GRANTED.

Applicant is advised that the new correspondence address for this application is:

Mr. Charles Ruggiero, Esq.
Ohlandt, Greeley, Ruggiero & Perle
One Landmark Square, 10th Floor
Stamford, CT 06901

Office of the Director
Technology Center 3700

Hans-Peter G. Hoffman
Pillsbury Winthrop, LLP
695 East Main Street
Stamford, CT 06904-6760

UNITED STATES PATENT AND TRADEMARK OFFICE

Commissioner for Patents
United States Patent and Trademark Office
P.O. Box 1450
Alexandria, VA 22313-1450
www.uspto.gov

MACPHERSON KWOK CHEN & HEID LLP
2033 GATEWAY PLACE
SUITE 400
SAN JOSE CA 95110

COPY MAILED

DEC 13 2007

OFFICE OF PETITIONS

In re Application of	:	
Park et al.	:	
Application No. 10/931,338	:	DECISION ON PETITION
Filed: August 31, 2004	:	
Attorney Docket No. ABS-1580 US	:	

This is a decision on the petition under the unintentional provisions of 37 CFR 1.137(b), filed November 14, 2007, to revive the above-identified application.

The petition is **GRANTED**.

The petition satisfies the requirements of 37 CFR 1.137(b) in that petitioner has supplied (1) the reply in the form of an Amendment, (2) the petition fee, and (3) a proper statement of unintentional delay.

Telephone inquiries concerning this decision should be directed to the undersigned at (571) 272-3206.

This matter is being referred to Technology Center 2814 for further examination on the merits.

Liana Walsh
Petitions Examiner
Office of Petitions

UNITED STATES PATENT AND TRADEMARK OFFICE

Commissioner for Patents
United States Patent and Trademark Office
P.O. Box 1450
Alexandria, VA 22313-1450
www.uspto.gov

AKERMAN SENTERFITT
P.O. BOX 3188
WEST PALM BEACH, FL 33402-3188

MAILED

FEB 17 2009

OFFICE OF PETITIONS

In re Application of

Yonah, **SADDIK**
Application No. 10/931,352
Filed: August 31, 2004
Attorney Docket No. **7615-1**

DECISION ON PETITION TO WITHDRAW FROM RECORD

This is a decision on the Request to Withdraw as attorney or agent of record under 37 C.F.R. § 1.36(b), filed December 4, 2008.

The request is **APPROVED**.

A grantable request to withdraw as attorney/agent of record must be signed by every attorney/agent seeking to withdraw or contain a clear indication that one attorney is signing on behalf of another/others. A request to withdraw will not be approved unless at least 30 (thirty) days would remain between the date of approval and the later of the expiration date of a time to file a response or the expiration date of the maximum time period which can be extended under 37 C.F.R. § 1.136(a).

The request was signed by Mark M. Zylka on behalf of all attorneys of record. All attorneys/agents associated have been withdrawn. Applicant is reminded that there is no attorney of record at this time.

All future communications from the Office will be directed to the sole named signing inventor Yonah Saddik at the address below until otherwise properly notified by the applicant.

There is an outstanding Office action mailed September 16, 2008 that requires a reply from the applicant.

Telephone inquiries concerning this decision should be directed to the undersigned at 571-272-7253.

/Monica A. Graves/
Petitions Examiner, Office of Petitions

cc: **YONAH SADDIK**
9989 MARSALA WAY
DELRAY BEACH, FL 33446-9728

SPE RESPONSE FOR CERTIFICATE OF CORRECTION

Paper No.: _____

DATE : February 24, 2006

TO SPE OF : ART UNIT 2819

SUBJECT : Request for Certificate of Correction on Patent No.: 6,980,033 /APPL.10/931360

A response is requested with respect to the accompanying request for a certificate of correction.

Please complete this form and return with file, within 7 days to:
Palm location **7580, Certificates of Correction Branch – South Tower – 9A22**
If response is for an IFW, **return to employee (named below) via PUBSCofC Team in MADRAS.** COCX

With respect to the change(s) requested, correcting Office and/or Applicant's errors, should the patent read as shown in the certificate of correction (COCIN)? No new matter should be introduced, nor should the scope or meaning of the claims be changed.

Magdalene Talley

Thank You For Your Assistance

Certificates of Correction Branch
Tel. No. 703-308-9309 ext. 116

The request for issuing the above-identified correction(s) is hereby:
Note your decision on the appropriate box.

- ☐ **Approved** — All changes apply.
- ☐ **Approved in Part** — Specify below which changes **do not** apply.
- ☐ **Denied** — State the reasons for denial below.

Comments:

_____

_____

_____

_____

_____

_____ SPE

_____ Art Unit

SPE RESPONSE FOR CERTIFICATE OF CORRECTION

Paper No.:20060515

DATE : May 15, 2006

TO SPE OF : ART UNIT 2826

SUBJECT : Request for Certificate of Correction on Patent No.: 7,026,694

A response is requested with respect to the accompanying request for a certificate of correction.

Please complete this form and return with file, within **7** days to:
Certificates of Correction Branch - PK 3-910
Palm location **7590** - Tel. No. 305-8201

With respect to the change(s) requested, correcting Office and/or Applicant's errors, should the patent read as shown in the certificate of correction? No new matter should be introduced, nor should the scope or meaning of the claims be changed.

Thank You For Your Assistance **Certificates of Correction Branch**

The request for issuing the above-identified correction(s) is hereby:
Note your decision on the appropriate box.

☒ **Approved** All changes apply.

☐ **Approved in Part** Specify below which changes **do not** apply.

☐ **Denied** State the reasons for denial below.

Comments:

SPE: Nathan Flynn **Art Unit** 2826

10/931,364

$ copy

OIPE IAP43
MAY 01 2006
PATENT & TRADEMARK OFFICE

IN THE UNITED STATES PATENT AND TRADEMARK OFFICE

Certificate
MAY 03 2006
of Correction

Applicant: Kie Y. Ahn et al.

Examiner: Wilson, Scott

Patent No.: 7,026,694

Group Art Unit: 2826

Issue Date: April 11, 2006

Docket No: 1303.069US2

Title: LANTHANIDE DOPED TiOx DIELECTRIC FILMS BY PLASMA OXIDATION

Commissioner for Patents
P.O. Box 1450
Alexandria, VA 22313-1450
ATTN: CERTIFICATE OF CORRECTION BRANCH

We are transmitting herewith the attached:

X A check in the amount of $100.00 to cover the Certificate of Correction fee.
X Request for Certificate of Correction.
X Certificate of Correction Form - PTO-1050 (in duplicate)
X A return postcard.

Please charge any additional fees or credit overpayment to Deposit Account No. 19-0743.

SCHWEGMAN, LUNDBERG, WOESSNER & KLUTH, P.A.
Customer No: 21186

By: David R. Cochran
Name: David R. Cochran
Reg. No.46,632
DRC:CMG:sj

CERTIFICATE UNDER 37 CFR 1.8: The undersigned hereby certifies that this correspondence is being deposited with the United States Postal Service with sufficient postage as first class mail, in an envelope addressed to: Commissioner of Patents and Trademarks, P.O. Box 1450, Alexandria VA 22313-1450, on this 26 day of April 2006.

KATHLEEN E. ROTHROCK
Name

Kathleen E. Rothrock
Signature

MAY 04 2006

Patent 7,026,694 PATENT

IN UNITED STATES PATENT AND TRADEMARK OFFICE

Patent No.: 7,026,694 Docket No: 1303.069US2

Issue Date: April 11, 2006 Patentee: Kie Y. Ahn et al.

Customer No.: 21186 Confirmation No.: 8814

Title LANTHANIDE DOPED TiOx DIELECTRIC FILMS BY PLASMA OXIDATION

OIPE IAP MAY 01 2006 PATENT & TRADEMARK OFFICE

REQUEST FOR CERTIFICATE OF CORRECTION

Commissioner for Patents
P.O. Box 1450
Alexandria, VA 22313-1450
ATTN: CERTIFICATE OF CORRECTION BRANCH

It is requested that a Certificate of Correction be issued correcting printing errors appearing in the above-identified United States patent. Two copies of the text of the Certificate in the suggested form are enclosed.

Pursuant to 1.20(a), enclosed please find a check in the amount of $100.00.

Issuance of the Certificate of Correction would neither expand nor contract the scope of the claims as properly allowed, and re-examination is not required.

The Examiner is authorized to charge any additional fees or credit overpayment to Deposit Account No.19-0743.

OK to ENP

Respectfully Submitted

KIE Y. AHN ET AL.

By their Representatives,

SCHWEGMAN, LUNDBERG, WOESSNER & KLUTH, P.A
P.O. Box 2938
Minneapolis, MN 55402
(612) 373-6900

Date: 26 April 2006

By: David R. Cochran
Reg. No: 46,632
DRC:sj

CERTIFICATE UNDER 37 CFR § 1.8: The undersigned hereby certifies that this correspondence is being deposited with the United States Postal Service with sufficient postage as first class mail, in an envelope addressed to: Commissioner for Patents, P.O. Box 1450 Alexandria, VA 22313-1450, on this 26 day of April 2006

KATHLEEN E. ROTHROCK
Name

Signature

05/02/2006 SDENBOB1 00000015 7026694
01 FC:1811 100.00 OP

MAY 04 2006

PTO/SB/44 (02-01)
PTO/SB/44 (02-01)
Approved for use through 01/31/2004. OMB 0651-0033
U.S. Patent and Trademark Office; U.S. DEPARTMENT OF COMMERCE
Under the Paperwork Reduction Act of 1995, no persons are required to respond to a collection of information unless it displays a valid OMB control number.
(Also Form PTO-1050)

UNITED STATES PATENT AND TRADEMARK OFFICE
CERTIFICATE OF CORRECTION

PATENT NO : 7,026,694 Page (1) of 1

DATED : April 11, 2006

INVENTOR(S) : Ahn et al.

It is certified that error appears in the above-identified patent and that said Letters Patent is hereby corrected as shown below:

On the face page, in field (54), in Title, in column 1, line 1, delete "TIO_x" and insert - - TiO_x - -, therefor.

On page 2, in field (56), under "U.S. Patent Documents", in column 2, line 26, delete "Oslen" and insert - - Osten - -, therefor.

On page 3, in field (56), under "Other Publications", in column 2, line 46, delete "Lodide" and insert - - Iodide - -, therefor.

In column 1, line 1, delete "TIO_x" and insert - - TiO_x - -, therefor.

In column 4, line 32, after "(t_{eq})" insert - - . - -.

In column 5, line 56, delete "t_{SiO2}" and insert - - t_{SiO} - -, therefor.

In column 11, line 28, delete "fo" and insert - - for - -, therefor.

In column 21, line 25, in Claim 10, delete "(teq)" and insert - - (t_{eq}) - -, therefor.

In column 21, line 28, in Claim 11, delete "(teq)" and insert - - (t_{eq}) - -, therefor.

In column 21, line 53, in Claim 16, delete "TiOx" and insert - - TiO_x - -, therefor.

In column 21, line 56, in Claim 17, delete "TiOx" and insert - - TiO_x - -, therefor.

In column 22, line 54, in Claim 26, after "containing a" delete "TiOx" and insert - - TiO_x - -, therefor.

In column 22, line 54, in Claim 26, after "includes" delete "TiOx" and insert - - TiO_x - -, therefor.

MAILING ADDRESS OF SENDER:

SCHWEGMAN, LUNDBERG, WOESSNER, & KLUTH, P.A.
P.O. BOX 2938
Minneapolis, MN 55402

Atty Docket No: 1303.069US2

PATENT NO. 7,026,694

No. of additional copies

MAY 04 2006

PTO/SB/44 (02-01)
PTO/SB/44 (02-01)
Approved for use through 01/31/2004. OMB 0651-0033
U.S. Patent and Trademark Office; U.S. DEPARTMENT OF COMMERCE
Under the Paperwork Reduction Act of 1995, no persons are required to respond to a collection of information unless it displays a valid OMB control number.
(Also Form PTO-1050)

UNITED STATES PATENT AND TRADEMARK OFFICE
CERTIFICATE OF CORRECTION

PATENT NO : 7,026,694 Page (1) of 1

DATED : April 11, 2006

INVENTOR(S) : Ahn et al.

It is certified that error appears in the above-identified patent and that said Letters Patent is hereby corrected as shown below:

On the face page, in field (54), in Title, in column 1, line 1, delete "TIO_x" and insert - - TiO_x - -, therefor.

On page 2, in field (56), under "U.S. Patent Documents", in column 2, line 26, delete "Oslen" and insert - - Osten - -, therefor.

On page 3, in field (56), under "Other Publications", in column 2, line 46, delete "Lodide" and insert - - Iodide - -, therefor.

In column 1, line 1, delete "TIO_x" and insert - - TiO_x - -, therefor.

In column 4, line 32, after "(t_{eq})" insert - - , - -.

In column 5, line 56, delete "t_{SiO2}" and insert - - t_{SiO} - -, therefor.

In column 11, line 28, delete "fo" and insert - - for - -, therefor.

In column 21, line 25, in Claim 10, delete "(teq)" and insert - - (t_{eq}) - -, therefor.

In column 21, line 28, in Claim 11, delete "(teq)" and insert - - (t_{eq}) - -, therefor.

In column 21, line 53, in Claim 16, delete "TiOx" and insert - - TiO_x - -, therefor.

In column 21, line 56, in Claim 17, delete "TiOx" and insert - - TiO_x - -, therefor.

In column 22, line 54, in Claim 26, after "containing a" delete "TiOx" and insert - - TiO_x - -, therefor.

In column 22, line 54, in Claim 26, after "includes" delete "TiOx" and insert - - TiO_x - -, therefor.

MAILING ADDRESS OF SENDER:

SCHWEGMAN, LUNDBERG, WOESSNER, & KLUTH, P.A.
P.O. BOX 2938
Minneapolis, MN 55402

PATENT NO. 7,026,694

No. of additional copies

Atty Docket No: 1303.069US2

MAY 04 2006

SPE RESPONSE FOR CERTIFICATE OF CORRECTION

Paper No.: _____

DATE : 3/30/2007

TO SPE OF : ART UNIT 2800 (2819)

SUBJECT : Request for Certificate of Correction on Patent No.: 7,176,719

A response is requested with respect to the accompanying request for a certificate of correction.

Please complete this form and return with file ***(PFW)**, within 7 days to:
Certificates of Correction Branch – 2900 South Tower ste.9A43A
Palm location **7580** or forward ***(IFW)** to scanning using document code **COCX**.

***Ok to enter extra text to claim 43 as req. in COCIN?**

Ernest C. White, LIE (703) 308-9390x122

Thank You For Your Assistance — **Certificates of Correction Branch**

The request for issuing the above-identified correction(s) is hereby:
Note your decision on the appropriate box.

- ☑ **Approved** — **All** changes apply.
- ☐ **Approved in Part** — Specify below which changes **do not** apply.
- ☐ **Denied** — State the reasons for denial below.

Comments:

OK to enter JC

Rupford Barme — **SPE**

2819 — **Art Unit**

UNITED STATES PATENT AND TRADEMARK OFFICE

Commissioner for Patents
United States Patent and Trademark Office
P.O. Box 1450
Alexandria, VA 22313-1450
www.uspto.gov

BLAKELY SOKOLOFF TAYLOR & ZAFMAN
12400 WILSHIRE BOULEVARD
SEVENTH FLOOR
LOS ANGELES CA 90025-1030

COPY MAILED

JUL 2 9 2005

OFFICE OF PETITIONS

In re Application of :
Hristo Sabev :
Application No. 10/931,415 : DECISION GRANTING PETITION
Filed: August 31, 2004 :
Attorney Docket No.: 6570P148 :
Title of Invention: SYSTEM AND :
METHOD FOR SMART PROXY CREATION AND:
MANAGEMENT WITHIN A DISTRIBUTED
OBJECT-ORIENTED ARCHITECTURE

This is a decision on the petition filed May 20, 2005 (certificate of mailing May 18, 2005), requesting in effect that a Notice Of Missing Parts in a Nonprovisional Application("Notice") mailed January 18, 2005, be withdrawn.

The application was filed on August 31, 2004. However, on January 18, 2005, the Office of Initial Patent Examination (OIPE) mailed a Notice stating that the application had been accorded a filing date of August 31, 2004 but pages 21 and 22 of the specification appeared to have been omitted.

In response, the present petition was filed wherein Petitioner contends 30 pages of specification were filed including pages 21 and 22 were filed on August 31, 2004. In support, the petition is accompanied by a copy of applicant's return postcard which lists " Application: Utility (30 pages with cover & abstract)". The petition is further accompanied by a copy of pages 21 and 22 of the specification.

Applicant's postcard receipt is prima facie evidence that 30 pages of specification, including pages 21 and 22 were received on August 31, 2004, but pages 21 and 22 are not present in the file. Hence, it is clear that the papers for this application were mishandled by the Office. Therefore, it is concluded that pages 21 and 22 of the specification were received on August 31,

2004, as shown in counsel's file, and later misplaced in the office.

The petition is Granted-In-Part to the extent it applies to the omitted pages of specification. However, the Notice was correct regarding the requirement to submit an executed oath or declaration and surcharge fee. Deposit account no. 02-2666 will be credited with the $130.00 petition fee submitted. It should be noted effective November 22, 2004 the current petition fee is $400.00.

Pages 21 and 22 of the specification supplied on May 20, 2005, will be used for processing and examination purposes.

The application is being returned to the Office of Initial Patent Examination for further processing with a filing date of **August 31, 2004** using the papers received on that date and the copy of pages 21 and 22 of the specification supplied on May 20, 2005.

Telephone inquiries related to this decision may be directed to the undersigned at (571) 272-3215.

Charlema R. Grant

Charlema R. Grant
Petitions Attorney
Office of Petitions

UNITED STATES PATENT AND TRADEMARK OFFICE

Commissioner for Patents
United States Patent and Trademark Office
P.O. Box 1450
Alexandria, VA 22313-1450
www.uspto.gov

COZEN O'CONNOR, P.C.
1900 MARKET STREET
PHILADELPHIA, PA 19103-3508

COPY MAILED

MAR 0 9 2005

OFFICE OF PETITIONS

In re Application of
Nicolosi, Wu, Kaskkoush
Application No. 10/931,457
Filed: September 1, 2004
Attorney Docket No. VERTE.008-102
For: MEGASONIC PROCESSING SYSTEM WITH GASIFIED FLUID

: DECISION REFUSING STATUS
: UNDER 37 CFR 1.47(a)

This is a decision on the petition under 37 CFR 1.47(a) December 27, 2004.

The petition under 37 CFR 1.47(a) is **dismissed.**

Any request for reconsideration under this decision must be submitted within TWO (2) MONTHS from the mail date of this decision. Extensions of time under 37 CFR 1.136(a) are permitted. Failure to respond will result in the abandonment of this application. Any response should be titled "Request for Reconsideration of Petition Under 37 CFR 1.47(a).

The above-identified application was filed on September 1, 2004, and was not accompanied by a properly executed oath or declaration. A Notice to File Missing Parts of Nonprovisional Application was mailed on October 28, 2004, requiring a properly executed oath or declaration and payment of a surcharge for the late filing of the same. The notice allowed an extendable period for response of two months from its mailing date. The instant petition was filed, responsively, on December 27, 2004, with exhibits.

A grantable petition under 37 CFR 1.47(a) requires:

(1) proof that the non-signing inventor(s) cannot be reached or refuses to sign the oath or declaration after having been presented with the application papers (specification, claims, and drawings);

(2) an acceptable oath or declaration in compliance with 35 U.S.C. §§ 115 and 116;

(3) the petition fee,

(4) a statement of the last known address of the non-signing inventor,

The instant petition lacks item (2) as set forth above.

As to item (2), no declaration executed by inventor Wu was found with the instant petition. Any renewed petition filed must be accompanied by a declaration executed by inventor Wu or statement of facts establishing that inventor Wu has either refused to join the application or is unavailable to do so.

Further correspondence with respect to this matter should be addressed as follows:

By mail: Mail Stop Petitions
Commissioner for Patents,
PO Box 1450
Alexandria, VA 22313-1450

By FAX: (703) 872-9306
Attn: Office of Petitions

Telephone inquiries should be directed to the undersigned (571) 272-3222.

Kenya A. McLaughlin

Kenya A. McLaughlin
Petitions Attorney
Office of Petitions

UNITED STATES PATENT AND TRADEMARK OFFICE

Commissioner for Patents
United States Patent and Trademark Office
P.O. Box 1450
Alexandria, VA 22313-1450
www.uspto.gov

COZEN O'CONNOR, P.C.
1900 MARKET STREET
PHILADELPHIA, PA 19103-3508

COPY MAILED

APR 1 2 2005

OFFICE OF PETITIONS

In re Application of
Nicolosi, Wu, and Kaskkoush
Application No.: 10/931,457
Filed: September 1, 2004
Attorney Docket No: VERTE.008-102
For: **MEGASONIC PROCESSING SYSTEM WITH GASIFIED FLUID**

: DECISION ACCORDING
: RULE 47(a) STATUS

This is in response to the renewed petition under 37 CFR 1.47(a), filed March 21, 2005.

The petition is **GRANTED**.

The above-identified application and papers have been reviewed and found in compliance with 37 CFR 1.47(a). This application is hereby accorded Rule 1.47(a) status.

The above-identified application was filed on September 1, 2004, and was not accompanied by a properly executed oath or declaration. A Notice to File Missing Parts of Nonprovisional Application was mailed on October 28, 2004, requiring a properly executed oath or declaration and payment of a surcharge for the late filing of the same. The notice allowed an extendable period for response of two months from its mailing date. A petition under 37 CFR 1.47(a) was filed, responsively, on December 27, 2004, with exhibits. The petition was dismissed by a decision mailed March 9, 2005.

Petitioner has shown that inventor Nicolosi is not available to join the application. The above-identified application and papers have been reviewed and found in compliance with 37 CFR 1.47(a). This application is hereby accorded Rule 1.47(a) status.

As provided in Rule 1.47(c), this Office will forward notice of this application's filing to the non-signing inventor at the addresses given in the petition. Notice of the filing of this application will also be published in the Official Gazette.

This application will be directed to the Office of Initial Patent Examination for further processing.

Telephone inquiries regarding this decision should be directed to the undersigned at (571) 272-3222.

Kenya A. McLaughlin
Petitions Attorney
Office of Petitions

UNITED STATES PATENT AND TRADEMARK OFFICE

Commissioner for Patents
United States Patent and Trademark Office
P.O. Box 1450
Alexandria, VA 22313-1450
www.uspto.gov

MAILED

DEC 16 2005

TECHNOLOGY CENTER 2100

Chun-Pok Leung
TOWNSEND and TOWNSEND and CREW LLP
Two Embarcadero Center, 8th Floor
San Francisco, California 94111-3834

In re Application of:
Yuichi YAGAWA
Application No. 10/931,475
Filed: August 31, 2004
For: TRUSTED TIMES STAMPING STORAGE SYSTEM

DECISION ON PETITION TO MAKE SPECIAL

This is a decision on the petition, filed on June 16, 2005 under 37 C.F.R. §102(d) and M.P.E.P. § 708.02(VIII): Accelerated Examination, to make the above-identified application special.

The petition is **GRANTED**.

M.P.E.P. § 708.02, Section VIII which sets out the prerequisites for a grantable petition for Accelerated Examination under 37 C.F.R. § 102(d) states in relevant part:

> A new application (one which has not received any examination by the examiner) may be granted special status provided that applicant (and this term includes applicant's attorney or agent) complies with each of the following items:
>
> (A) Submits a petition to make special accompanied by the fee set forth in 37 CFR 1.17(h);
>
> (B) Presents all claims directed to a single invention, or if the Office determines that all the claims presented are not obviously directed to a single invention, will make an election without traverse as a prerequisite to the grant of special status;
>
> (C) Submits a statement(s) that a pre-examination search was made, listing the field of search by class and subclass, publication, Chemical Abstracts, foreign patents, etc. A search made by a foreign patent office satisfies this requirement;
>
> (D) Submits one copy each of the references deemed most closely related to the subject matter encompassed by the claims if said references are not already of record; and
>
> (E) Submits a detailed discussion of the references, which discussion points out, with the particularity required by 37 CFR 1.111 (b) and (c), how the claimed subject matter is patentable over the references.

Applicant's submission of June 16, 2005 meets all the criteria set out above. Accordingly, the petition is **GRANTED**. The application file is being forwarded to the Examiner for accelerated examination in accordance with M.P.E.P. § 708.02. If the application is subsequently allowed, it will be given priority for printing. See M.P.E.P. § 1309.

Vincent N. Trans
Special Program Examiner
Technology Center 2100
Computer Architecture, Software, and
Information Security
571-272-3613

UNITED STATES PATENT AND TRADEMARK OFFICE

Commissioner for Patents
United States Patent and Trademark Office
P.O. Box 1450
Alexandria, VA 22313-1450
www.uspto.gov

CHALKER FLORES, LLP
2711 LBJ FRWY
Suite 1036
DALLAS TX 75234

COPY MAILED

SEP 30 2009

OFFICE OF PETITIONS

In re Application of	:	
Richard B. Timmons, et al.	:	
Application No. 10/931,480	:	DECISION ON PETITION
Filed: September 1, 2004	:	TO MAKE SPECIAL UNDER
Attorney Docket No. UTAR:1013	:	37 CFR 1.102(c)(1)
	:	

This is a decision on the petition under 37 CFR 1.102(c)(1), filed August 31, 2009, to make the above-identified application special based on applicant's age as set forth in M.P.E.P. § 708.02, Section IV.

The petition is **GRANTED**.

A grantable petition to make an application special under 37 CFR 1.102(c)(1) and MPEP § 708.02, Section IV: Applicant's Age must be accompanied by evidence showing that at least one of the applicants is 65 years of age, or more, such as a birth certificate or a statement by applicant. No fee is required

The instant petition includes a copy of the applicant Richard B. Timmons's passport proving that he is 65 years of age or older. Accordingly, the above-identified application has been accorded "special" status.

Telephone inquiries concerning this decision should be directed to Terri Johnson at 571-272-2991.

All other inquiries concerning either the examination or status of the application should be directed to the Technology Center.

The application is being forwarded to the Technology Center Art Unit 1797 for action on the merits commensurate with this decision.

Terri Johnson

Terri Johnson
Petitions Examiner
Office of Petitions

UNITED STATES PATENT AND TRADEMARK OFFICE

UNITED STATES DEPARTMENT OF COMMERCE
United States Patent and Trademark Office
Address: COMMISSIONER FOR PATENTS
P.O. Box 1450
Alexandria, Virginia 22313-1450
www.uspto.gov

APPLICATION NO.	FILING DATE	FIRST NAMED INVENTOR	ATTORNEY DOCKET NO.	CONFIRMATION NO.
10/931,480	09/01/2004	Richard B. Timmons	UTAR:1013	8500

34725 7590 05/14/2010
CHALKER FLORES, LLP
2711 LBJ FRWY
Suite 1036
DALLAS, TX 75234

EXAMINER
LEVKOVICH, NATALIA A

ART UNIT	PAPER NUMBER
1797	

MAIL DATE	DELIVERY MODE
05/14/2010	PAPER

Please find below and/or attached an Office communication concerning this application or proceeding.

The time period for reply, if any, is set in the attached communication.

UNITED STATES PATENT AND TRADEMARK OFFICE

Commissioner for Patents
United States Patent and Trademark Office
P.O. Box 1450
Alexandria, VA 22313-1450
www.uspto.gov

MAY 14 2010

wk

Mailed:
Timmons et al.
Serial No. 10/931,480
Filed: 09/01/2004
For: PLASMA POLYMERIZATION FOR ENCAPSULATING PARTICLES

In re application of
DECISION ON PETITION

This is a decision on a PETITION filed February 22, 2010, which has been accepted as a timely petition under 1.59(b) and MPEP 724.02 and is before the Group Director of Technology Center 1700 for consideration.

DECISION

Petitioner requests that documents related to the RCE submission filed on February 16, 2010 be expunged. Petitioner further requests that the RCE fee for this submission be refunded.

The petition is **GRANTED.**

Section 1.59 has been amended to eliminate references to returning documents that have been expunged to recognize that, with electronic Official files, there will be nothing to return when a paper is expunged.

The Office is capturing electronic images of all documents that form the Official file. Where the image is generated from a physical source document, the originating document may be disposed of once the electronic image accuracy is verified. The paper source document will eventually be destroyed under a United States National Archives and Records Administration (NARA) approved schedule. Therefore, if a document is to be expunged from the record, the only operation that will be required will be removal of the image from the Official file.

Paragraph (a)(1) of §1.59 has been amended by deleting the phrase ''and returned '' from the first sentence, and deleting the second sentence. Paragraph (b) of §1.59 has been amended by deleting the phrase ''and return '' from each of the first and second sentences. The Office will continue to provide notice in the Official file that a paper has been expunged and the Office will send a decision to the applicant notifying the applicant that the paper has been expunged.

The images will be removed from the Official file.

10/931,480

/JACQUELINE STONE/

Jacqueline M. Stone, Director
Technology Center 1700
Chemical and Materials Engineering

Edwin S. Flores
CHALKER FLORES, LLP
2711 LBJ FRWY
Suite 1036
DALLAS TX 75234

UNITED STATES PATENT AND TRADEMARK OFFICE

Commissioner for Patents
United States Patent and Trademark Office
P.O. Box 1450
Alexandria, VA 22313-1450
www.uspto.gov

COPY MAILED

AUG 0 8 2007

OFFICE OF PETITIONS

DECHERT LLP
P.O. BOX 390460
MOUNTAIN VIEW, CA 94039-0460

In re Application of	
Rajinder Singh, et al.	
Application No. 10/931,481	DECISION ON PETITION
Filed: September 1, 2004	TO WITHDRAW
Attorney Docket No. 375462-016US	FROM RECORD

This is a decision on the Request to Withdraw as attorney or agent of record under 37 C.F.R. § 1.36(b) filed February 22, 2007.

The request is **DISMISSED** as moot.

A review of the file record indicates that the power of attorney to Dechert, LLP has been revoked by the assignee of the patent application on April 11, 2007. Accordingly, the request to withdraw under 37 C.F.R. § 1.36(b) is moot.

All future communications from the Office will continue to be directed to the below-listed address until otherwise notified by applicant.

Telephone inquires concerning this decision should be directed to undersigned at 571-272-1642.

April M. Wise
Petitions Examiner
Office of Petitions

cc: KAREN E. FLICK
RIGEL PHAMACEUTICALS, INC.
C/O FOLEY & LARDNER, LLP
1530 PAGE MILL ROAD
PALO ALTO, CA 94304

UNITED STATES PATENT AND TRADEMARK OFFICE

Commissioner for Patents
United States Patent and Trademark Office
P.O. Box 1450
Alexandria, VA 22313-1450
www.uspto.gov

DAY PITNEY LLP
7 TIMES SQUARE
NEW YORK, NY 10036-7311

COPY MAILED

AUG 03 2007

OFFICE OF PETITIONS

In re Application of	:	
NISHIO, Yoshihiko	:	
Application No. 10/931,494	:	DECISION ON PETITION
Filed: September 1, 2004	:	TO WITHDRAW
Attorney Docket No. **20619/0206473-US0**	:	FROM RECORD
	:	

This is a decision on the Request to Withdraw as attorney or agent of record under 37 C.F.R. § 1.36(b), filed March 26, 2007.

The request is **NOT APPROVED** as moot.

A review of the file record indicates that the power of attorney to **DAY PITNEY LLP** has been revoked by the assignee of the patent application on April 19, 2007. Accordingly, the request to withdraw under 37 C.F.R. § 1.36(b) is moot.

All future communications from the Office will continue to be directed to the below-listed address until otherwise notified by applicant.

Telephone inquires concerning this decision should be directed to the undersigned at 571-272-7253.

Monica A. Graves
Petitions Examiner
Office of Petitions

cc: **DARBY & DARBY PC**
PO BOX 5257
NEW YORK, NY 10150-5257

UNITED STATES PATENT AND TRADEMARK OFFICE

Commissioner for Patents
United States Patent and Trademark Office
P.O. Box 1450
Alexandria, VA 22313-1450
www.uspto.gov

MR. JOE PUGH
TRIQUINT SEMICONDUCTORS
2300 N.E. BROOKWOOD PARKWAY
HILLSBORO, OR 97124

COPY MAILED

SEP 0 6 2005

OFFICE OF PETITIONS

In re Application of :
Thomas R. Apel, et al. :
Application No. 10/931,495 :
Filed: August 31, 2004 :
Attorney Docket No. TQ0071 :

ON PETITION

This is a decision on the petition under 37 CFR 1.137(b) filed August 12, 2005, to revive the above-identified application.

The petition is **GRANTED.**

The above-identified application became abandoned for failure to reply in a timely manner to the Notice to File Missing Parts of Nonprovisional Application mailed October 28, 2004. The Notice set a period for reply of two (2) months from the mail date of the Notice. No extensions of time under the provisions of 37 CFR 1.136(a) were obtained. Accordingly, the above-identified application became abandoned on December 29, 2004.

Telephone inquiries concerning this decision should be directed to the undersigned at (571) 272-3229.

This application matter is being forwarded to the Office of Initial Patent Examination for further processing.

Retta Williams

Retta Williams
Petitions Examiner
Office of Petitions
Office of the Deputy Commissioner
for Patent Examination Policy

UNITED STATES PATENT AND TRADEMARK OFFICE

Commissioner for Patents
United States Patent and Trademark Office
P.O. Box 1450
Alexandria, VA 22313-1450
www.uspto.gov

DANN DORFMAN HERRELL & SKILLMAN
1601 MARKET STREET
SUITE 2400
PHILADELPHIA PA 19103-2307

COPY MAILED

SEP 22 2008

OFFICE OF PETITIONS

In re Application of	:	
Dewitt, et al.	:	
Application No. 10/931,529	:	ON PETITION
Filed: August 31, 2004	:	
Attorney Docket No. 0412-P03194US2	:	

This is a decision on the petition to withdraw the holding of abandonment under 37 CFR 1.181, filed August 20, 2008.

The petition under 37 CFR 1.181 is **GRANTED**.

The application was held abandoned due to failure to timely file a reply to the non-final Office action mailed December 28, 2008. This Office action set a shortened statutory period for reply of three (3) months. The Office mailed a Notice of Abandonment on July 30, 2008.

A review of the application file reveals the presence of an Amendment filed June 30, 2008. The Amendment was made timely by obtaining a three month extension of time, and by the fact that June 28, 2008 fell on a Saturday. See 37 CFR 1.7(a).

The matter is being forwarded to Group Art Unit 2624 for consideration of the Amendment filed June 30, 2008.

Telephone inquiries related to this decision should be directed to the undersigned at (571)272-3207.

Cliff Congo
Petitions Attorney
Office of Petitions

SPE RESPONSE FOR CERTIFICATE OF CORRECTION

DATE : 11/2/09 Paper No.: —

TO SPE OF : ART UNIT 2893

SUBJECT : Request for Certificate of Correction for Appl. No.: 10/921533 Patent No.: 7589882

Please respond to this request for a certificate of correction within 7 days.

FOR IFW FILES:

Please review the requested changes/corrections as shown in the **COCIN** document(s) in the IFW application image. No new matter should be introduced, nor should the scope or meaning of the claims be changed.

Please complete the response (see below) and forward the completed response to scanning using document code **COCX**.

FOR PAPER FILES:

Please review the requested changes/corrections as shown in the attached certificate of correction. Please complete this form (see below) and forward it with the file to:

Certificates of Correction Branch (CofC)
Randolph Square – 9D10-A
Palm Location 7580

2nd item

Virginia Tabor
Certificates of Correction Branch
571-272-0460

Thank You For Your Assistance

The request for issuing the above-identified correction(s) is hereby:
Note your decision on the appropriate box.

- [X] **Approved** — All changes apply.
- [ ] **Approved in Part** — Specify below which changes do not apply.
- [ ] **Denied** — State the reasons for denial below.

Comments: the errors are printing errors. /TQ/

/Davienne Monbleau/ SPE AU 2893

UNITED STATES PATENT AND TRADEMARK OFFICE

UNITED STATES DEPARTMENT OF COMMERCE
United States Patent and Trademark Office
Address: COMMISSIONER FOR PATENTS
P.O. Box 1450
Alexandria, Virginia 22313-1450
www.uspto.gov

SCHWEGMAN, LUNDBERG & WOESSNER, P.A.
P.O. BOX 2938
MINNEAPOLIS, MN 55402

Mail Date: 04/20/2010

Applicant	: Kie Y. Ahn	: DECISION ON REQUEST FOR
Patent Number	: 7588988	: RECALCULATION of PATENT
Issue Date	: 09/15/2009	: TERM ADJUSTMENT IN VIEW
Appliction No	: 10/931,533	: OF WYETH AND NOTICE OF INTENT TO
Filed	: 08/31/2004	: ISSUE CERTIFICATE OF CORRECTION
		:

The Request for Recalculation is **GRANTED** to the extent indicated.

The patent term adjustment has been determined to be **278** days. The USPTO will *sua sponte* issue a certificate of correction reflecting the amount of PTA days determined by the recalculation.

Prior to the issuance of the certificate of correction, the USPTO will afford patentee an opportunity to be heard and request reconsideration. Accordingly, patentee has **one month or thirty (30) days**, whichever is longer, to file a request for reconsideration of this patent term adjustment calculation. See 35 U.S.C. 154(b)(3)(B)(ii) and 37 CFR 1.322(a)(4). No extensions of time will be granted under 37 CFR 1.136.

Patentee should use document code PET.OP if electronically filing a request for reconsideration of this patent term adjustment calculation. The patentee must also include the information required by 37 CFR 1.705(b)(2) and the fee required by 37 CFR 1.18(e). If patentee does not file a timely request for reconsideration of this patent term adjustment calculation including the information required by 37 CFR 1.705(b)(2) and the fee required by 37 CFR 1.18(e), the USPTO will issue a certificate of correction reflecting the PTA determination noted above.

Patentee should be aware that in order to preserve the right to review in the United States District Court for the District of Columbia of the USPTO patent term adjustment determination, patentee must ensure that he or she also take the steps required under 35 U.S.C. 154(b)(4)(A) in a timely manner. Nothing in the request for recalculation should be construed as providing an alternative time frame for commencing a civil action under 35 U.S.C. 154(b)(4)(A).

Any questions concerning this decision should be directed to the Office of Patent Legal Administration at 571-272-7702.

UNITED STATES PATENT AND TRADEMARK OFFICE

Commissioner for Patents
United States Patent and Trademark Office
P.O. Box 1450
Alexandria, VA 22313-1450
www.uspto.gov

KLEIN, O'NEILL & SINGH, LLP
43 CORPORATE PARK
SUITE 204
IRVINE, CA 92606

COPY MAILED

JUL 20 2007

OFFICE OF PETITIONS

In re Application of

CHIPMAN, Timothy W.
Application No. 10/931,539
Filed: September 01, 2004
Attorney Docket No. **904-05-PA-T**

DECISION ON PETITION
TO WITHDRAW
FROM RECORD

This is a decision on the Request to Withdraw as attorney or agent of record under 37 C.F.R. § 1.36(b), filed May 24, 2007.

The request is **APPROVED**.

A grantable request to withdraw as attorney/agent of record must be signed by every attorney/agent seeking to withdraw or contain a clear indication that one attorney is signing on behalf of another/others. A request to withdraw will not be approved unless at least 30 (thirty) days would remain between the date of approval and the later of the expiration date of a time to file a response or the expiration date of the maximum time period which can be extended under 37 C.F.R. § 1.136(a).

The request was signed by Tejinder Singh on behalf of all attorneys of record. All attorneys/agents associated have been withdrawn. Applicant is reminded that there is no attorney of record at this time.

The request to change the correspondence of record is not acceptable as the requested correspondence address is not that of: (1) the first named signing inventor; or (2) an intervening assignee of the entire interest under 37 C.F.R 3.71. All future communications from the Office will be directed to the first named signing inventor.

There are no outstanding office actions at this time.

Telephone inquiries concerning this decision should be directed to Michelle R. Eason at 571-272-4231.

Terri Williams
Petitions Examiner
Office of Petitions

cc: **TIMOTHY W. CHIPMAN**
344 SHADOW OAKS
IRVINE, CALIFORNIA 92618

cc: **RUTAN & TUCKER**
611 ANTON BLVD, SUITE 1400
COSTA MESA, CA 92626

UNITED STATES PATENT AND TRADEMARK OFFICE

Commissioner for Patents
United States Patent and Trademark Office
P.O. Box 1450
Alexandria, VA 22313-1450
www.uspto.gov

MAILED

MAY 3 1 2006

Technology Center 2100

TOWNSEND AND TOWNSEND AND CREW, LLP

TWO EMBARCADERO CENTER
EIGHTH FLOOR
SAN FRANCISCO, CA 94111-3834

In re Application of: AMANO, TAKASHI
Application No. 10/931,543
Filed: 31 August 2004
For: METHOD AND APPARATUS FOR DATA RECOVERY SYSTEM USING STORAGE BASED JOURNALING

DECISION ON PETITION
TO MAKE SPECIAL
(ACCELERATED EXAMINATION)
UNDER M.P.E.P. §708.02 (VIII)

This is a decision on Applicant's petition dated 1 June 2005, , to make the above-identified application special, under 37 CFR § 102(d) and MPEP § 708.02(VIII): Accelerated Examination.

The Petition is **GRANTED**.

M.P.E.P. § 708.02, Section VIII which sets out the prerequisites for a grantable petition for Accelerated Examination under 37 C.F.R. § 102(d) states in relevant part:

A new application (one which has not received any examination by the examiner) may be granted special status provided that applicant (and this term includes applicant's attorney or agent) complies with each of the following items:

(a) Submits a petition to make special accompanied by the fee set forth in 37 CFR 1.17(h);

(b) Presents all claims directed to a single invention, or if the Office determines that all the claims presented are not obviously directed to a single invention, will make an election without traverse as a prerequisite to the grant of special status;

(c) Submits a statement(s) that a pre-examination search was made, listing the field of search by class and subclass, publication, Chemical Abstracts, foreign patents, etc. The pre-examination search must be directed to the invention as claimed in the application for which special status is requested. A search made by a foreign patent office satisfies this requirement;

(d) Submits one copy each of the references deemed most closely related to the subject matter encompassed by the claims if said references are not already of record; and

(e) Submits a detailed discussion of the references, which discussion points out, with the particularity required by 37 CFR 1.111 (b) and (c), how the claimed subject matter is patentable over the references.

Petition to Make Special **GRANTED** since all of the requirements for special status under MPEP § 708.02(VIII) have been met.

The application is being forwarded to the Examiner for accelerated examination in accordance with M.P.E.P. §708.02, Section VIII. If the application is subsequently allowed, it will be given priority for printing. See M.P.E.P. §1309.

Brian L. Johnson
Special Programs Examiner
Technology Center 2100
Computer Architecture, Software and Information Security
571-272-3595

GO

UNITED STATES PATENT AND TRADEMARK OFFICE

Commissioner for Patents
United States Patent and Trademark Office
P.O. Box 1450
Alexandria, VA 22313-1450
www.uspto.gov

CHARLES A. WILKINSON, ESQ.
68 EAST BROAD STREET
P. O. BOX 1426
BETHLEHEM, PA 18016-1426

COPY MAILED

SEP 28 2007

OFFICE OF PETITIONS

In re Application of	:	
Jason Kocher	:	
Application No. 10/931,557	:	DECISION ON PETITION
Filed: September 1, 2004	:	
Attorney Docket No. 331	:	

This is a decision on the petition under 37 CFR 1.137(b), filed August 15, 2007, to revive the above-identified application.

The petition is **GRANTED**.

This application became abandoned for failure to timely pay the issue fee on or before May 14, 2007, as required by the Notice of Allowance and Fee(s) Due, mailed February 13, 2007. Accordingly, the date of abandonment of this application is May 15, 2007. A Notice of Abandonment was mailed on June 11, 2007.

The petition satisfies the requirements of 37 CFR 1.137(b) in that petitioner has supplied (1) the reply in the form of payment of the issue fee of $700, (2) the petition fee of $750, and (3) a proper statement of unintentional delay. Accordingly, the issue fee is accepted as being unintentionally delayed.

Telephone inquiries concerning this decision should be directed to the undersigned at (571) 272-3218.

This application is being referred to Publishing Division for appropriate processing in accordance with this decision on petition.

Frances Hicks

Frances Hicks
Petitions Examiner
Office of Petitions

UNITED STATES PATENT AND TRADEMARK OFFICE

Commissioner for Patents
United States Patent and Trademark Office
P.O. Box 1450
Alexandria, VA 22313-1450
www.uspto.gov

ROSSI KIMMS & MCDOWELL LLP
P.O. BOX 826
ASHBURN, VA 20146-0826

COPY MAILED

OCT 09 2007

OFFICE OF PETITIONS

In re Application of :
Masao Kondo et al :
Application No. 10/931,575 : ON PETITION
Filed: September 1, 2004 :
Attorney Docket No. AUTOMATIC ACCOMPANIMENT APPARATUR AND A STORAGE DEVICE STORING A PROGRAM FOR OPERATING THE SAME

This is a decision on the petition, filed October 4, 2007 under 37 CFR 1.313(c)(2) to withdraw the above-identified application from issue after payment of the issue fee.

The petition is **GRANTED**.

The above-identified application is withdrawn from issue for consideration of a submission under 37 CFR 1.114 (request for continued examination). See 37 CFR 1.313(c)(2).

Petitioner is advised that the issue fee paid on September 18, 2007 in the above-identified application cannot be refunded. If, however, the above-identified application is again allowed, petitioner may request that it be applied towards the issue fee required by the new Notice of Allowance.[1]

Telephone inquiries should be directed to Irvin Dingle at (571) 272-3210.

This matter is being referred to Technology Center AU 2837 for processing of the request for continued examination under 37 CFR 1.114 and for consideration of the concurrently filed Information Disclosure Statement.

Irvin Dingle
Petitions Examiner
Office of Petitions

---

[1] The request to apply the issue fee to the new Notice may be satisfied by completing and returning the new Issue Fee Transmittal Form PTOL-85(b), which includes the following language thereon: Commissioner for Patents is requested to apply the Issue Fee and Publication Fee (if any) or re-apply any previously paid issue fee to the application identified above. Petitioner is advised that, whether a fee is indicated as being due or not, the Issue Fee Transmittal Form **must** be completed and timely submitted to avoid abandonment. Note the language in bold text on the first page of the Notice of Allowance and Fee(s) Due (PTOL-85).

UNITED STATES PATENT AND TRADEMARK OFFICE

Commissioner for Patents
United States Patent and Trademark Office
P.O. Box 1450
Alexandria, VA 22313-1450
www.uspto.gov

MCNEES, WALLACE & NURICK, LLC
100 Pine Street
P.O. Box 1166
Harrisburg, PA 17108-1166

COPY MAILED
AUG 14 2006
OFFICE OF PETITIONS

In re Application of	:	
Joseph C. HADDAD	:	
Application No. 10/931,576	:	DECISION ON PETITION
Filed: September 1, 2004	:	TO WITHDRAW
Attorney Docket No. 22844-0005	:	FROM RECORD
	:	

This is a decision on the Request to Withdraw as attorney or agent of record under 37 C.F.R. § 1.36(b), filed March 22, 2006.

The request is **NOT APPROVED** as moot.

A review of the file record indicates that the power of attorney to K. Scott O'Brian has been revoked by the applicant of the patent application on April 25, 2006. Accordingly, the request to withdraw under 37 C.F.R. § 1.36(b) is moot.

All future communications from the Office will continue to be directed to the below-listed address until otherwise notified by applicant.

Telephone inquires concerning this decision should be directed to Monica A. Graves at 571-272-7253.

David Bucci
Petitions Examiner
Office of Petitions

cc: Jeffrey S. Habib, Esq.
Hooker & Habib, PC
100 Chestnut Street, Suite 304
Harrisburg, PA 17101

SPE RESPONSE FOR CERTIFICATE OF CORRECTION

Paper No.: _____

DATE : November 7,2007

TO SPE OF : ART UNIT 2827

SUBJECT : Request for Certificate of Correction for Appl. No.10/931587 patent no.7200053

Please respond to this request for a certificate of correction within 7 days.

Please review the requested changes/corrections as shown in the **COCIN** document(s) in the IFW application image. No new matter should be introduced, nor should the scope or meaning of the claims be changed.

Please complete the response (see below) and forward the completed response to scanning using document code **COCX**.

Magdalene Talley

Certificates of Correction Branch

703-308-9390 ext. 116

Thank You For Your Assistance

The request for issuing the above-identified correction(s) is hereby:

Note your decision on the appropriate box.

- [X] **Approved** — **All** changes apply.
- [ ] **Approved in Part** — Specify below which changes **do not** apply.
- [ ] **Denied** — State the reasons for denial below.

Comments: _____

SPE

2827
Art Unit

SPE RESPONSE FOR CERTIFICATE OF CORRECTION

Paper No.: _____

DATE : 6/12/09

TO SPE OF : ART UNIT 2419

SUBJECT : Request for Certificate of Correction for Appl. No.: 10931617 Patent No.: 7529253 B2

Please respond to this request for a certificate of correction within 7 days.

FOR IFW FILES:

Please review the requested changes/corrections as shown in the **COCIN** document(s) in the IFW application image. No new matter should be introduced, nor should the scope or meaning of the claims be changed.

Please complete the response (see below) and forward the completed response to scanning using document code **COCX**.

FOR PAPER FILES:

Please review the requested changes/corrections as shown in the attached certificate of correction. Please complete this form (see below) and forward it with the file to:

Certificates of Correction Branch (CofC)
South Tower - 9A22
Palm Location 7580
You can fax the Directors/SPE response to 571-270-9990

LAMONTE NEWSOME
Certificates of Correction Branch
703-308-9390 ext. 112

Thank You For Your Assistance

The request for issuing the above-identified correction(s) is hereby:
Note your decision on the appropriate box.

- ☒ **Approved** — **All** changes apply.
- ☐ **Approved in Part** — Specify below which changes **do not** apply.
- ☐ **Denied** — State the reasons for denial below.

Comments: _____

2419

pillsbury

10/931617

Copy c

Pillsbury Winthrop Shaw Pittman LLP
725 South Figueroa Street, Suite 2800 | Los Angeles, CA 90017-5406 | tel 213.488.7100 | fax 213.629.1033

OIPE IAP3 JUN 09 2009 PATENT & TRADEMARK OFFICE

June 4, 2009

Roger R. Wise
Phone: 213.488.7584
roger.wise@pillsburylaw.com

Privileged & Confidential

Via First-Class Mail

Certificate of Correction Branch
Commissioner for Patents
U.S. PATENT & TRADEMARK OFFICE
P.O. Box 1450
Alexandria, VA 22313-1450

Certificate JUN 10 2009 of Correction

Re: **U.S. PATENT NO. 7,529,253**
U.S. Application Serial No. 10/931,617
CERTIFICATE OF CORRECTION
Our Ref. No.: 081674-0311625

Dear Sir:

The above-referenced application was filed as a continuation of application 09/517,231, filed on March 2, 2000, now Patent No. 6,795,448. This is supported by the enclosed copy of the Utility Patent Application Transmittal and the Filing Receipt which was issued on November 1, 2004. However, the letters patent which was issued for this application does not indicate the information regarding the parent application.

Accordingly, it is hereby requested that the enclosed Certificate of Correction for the above-referenced patent be processed to indicate that it is a continuation of application 09/517,231.

It is believed that no fee is required for this request due to the fact that the Office inadvertently omitted the related parent information in the issued patent. However, if a fee becomes necessary, the Commissioner is hereby authorized to charge the fee for the Certificate of Correction in the amount of $100.00 to our Deposit Account No. 033975. The Commissioner is further authorized to charge any deficiency in payment or credit any overpayment to the aforementioned account number. A copy of this letter is enclosed.

06/09/2009 LNGUYEN1 00000006 033975 7529253
01 FC:1811 100.00 DA

Should you have any questions, please do not hesitate to call the undersigned at 213-488-7584. Thank you.

Respectfully submitted,

PILLSBURY WINTHROP SHAW PITTMAN LLP

Roger R. Wise

Roger R. Wise
Registration No. 31,204

RRW:msg
Enclosures

pillsbury

Pillsbury Winthrop Shaw Pittman LLP
725 South Figueroa Street, Suite 2800 | Los Angeles, CA 90017-5406 | tel 213.488.7100 | fax 213.629.1033

OIPE IAP3
JUN 0 9 2009
PATENT & TRADEMARK OFFICE

June 4, 2009

Roger R. Wise
Phone: 213.488.7584
roger.wise@pillsburylaw.com

Privileged & Confidential

Via First-Class Mail

Certificate of Correction Branch
Commissioner for Patents
U.S. PATENT & TRADEMARK OFFICE
P.O. Box 1450
Alexandria, VA 22313-1450

Re: **U.S. PATENT NO. 7,529,253**
U.S. Application Serial No. 10/931,617
CERTIFICATE OF CORRECTION
Our Ref. No.: 081674-0311625

Dear Sir:

The above-referenced application was filed as a continuation of application 09/517,231, filed on March 2, 2000, now Patent No. 6,795,448. This is supported by the enclosed copy of the Utility Patent Application Transmittal and the Filing Receipt which was issued on November 1, 2004. However, the letters patent which was issued for this application does not indicate the information regarding the parent application.

Accordingly, it is hereby requested that the enclosed Certificate of Correction for the above-referenced patent be processed to indicate that it is a continuation of application 09/517,231.

It is believed that no fee is required for this request due to the fact that the Office inadvertently omitted the related parent information in the issued patent. However, if a fee becomes necessary, the Commissioner is hereby authorized to charge the fee for the Certificate of Correction in the amount of $100.00 to our Deposit Account No. 033975. The Commissioner is further authorized to charge any deficiency in payment or credit any overpayment to the aforementioned account number. A copy of this letter is enclosed.

Should you have any questions, please do not hesitate to call the undersigned at 213-488-7584. Thank you.

Respectfully submitted,

PILLSBURY WINTHROP SHAW PITTMAN LLP

Roger R. Wise

Roger R. Wise
Registration No. 31,204

RRW:msg
Enclosures

PTO/SB/44 (08-07)
Approved for use through 08/31/2007. OMB 0651-0033
U.S. Patent and Trademark Office; U.S. DEPARTMENT OF COMMERCE
Under the Paperwork Reduction Act of 1995, no persons are required to respond to a collection of information unless it displays a valid OMB control number.
(Also Form PTO-1050)

UNITED STATES PATENT AND TRADEMARK OFFICE
CERTIFICATE OF CORRECTION

PATENT NO. : 7529253

APPLICATION NO.: 10/931,617

ISSUE DATE : May 5, 2009

INVENTOR(S) : PAUL K LEE, CHARLES ARNOLD LASSWELL and GREGORY J. SCHULTZ

It is certified that an error appears or errors appear in the above-identified patent and that said Letters Patent is hereby corrected as shown below:

On title page, insert after Prior Publication Data:
Related U.S. Application Data
(63) Continuation of application No. 09/517,231, filed on March 2, 2000, now Pat. No. 6,795,448

MAILING ADDRESS OF SENDER (Please do not use customer number below):
725 South Figueroa St., Suite 2800
Los Angeles, CA 90017-5406

This collection of information is required by 37 CFR 1.322, 1.323, and 1.324. The information is required to obtain or retain a benefit by the public which is to file (and by the USPTO to process) an application. Confidentiality is governed by 35 U.S.C. 122 and 37 CFR 1.14. This collection is estimated to take 1.0 hour to complete, including gathering, preparing, and submitting the completed application form to the USPTO. Time will vary depending upon the individual case. Any comments on the amount of time you require to complete this form and/or suggestions for reducing this burden, should be sent to the Chief Information Officer, U.S. Patent and Trademark Office, U.S. Department of Commerce, P.O. Box 1450, Alexandria, VA 22313-1450. DO NOT SEND FEES OR COMPLETED FORMS TO THIS ADDRESS. SEND TO: **Attention Certificate of Corrections Branch, Commissioner for Patents, P.O. Box 1450, Alexandria, VA 22313-1450.**

If you need assistance in completing the form, call 1-800-PTO-9199 and select option 2.

US007529253B2

(12) United States Patent
Lee et al.

(10) Patent No.: US 7,529,253 B2
(45) Date of Patent: *May 5, 2009

(54) IP PACKET READY PBX EXPANSION CIRCUIT FOR A CONVENTIONAL PERSONAL COMPUTER WITH EXPANDABLE, DISTRIBUTED DSP ARCHITECTURE

(75) Inventors: Paul K. Lee, San Jose, CA (US); Charles Arnold Lasswell, Olathe, KS (US); Gregory J. Schultz, San Jose, CA (US)

(73) Assignee: Intel Corporation, Santa Clara, CA (US)

(*) Notice: Subject to any disclaimer, the term of this patent is extended or adjusted under 35 U.S.C. 154(b) by 677 days.

This patent is subject to a terminal disclaimer.

(21) Appl. No.: 10/931,617

(22) Filed: Sep. 1, 2004

(65) Prior Publication Data

US 2005/0030941 A1 Feb. 10, 2005

(51) Int. Cl.
H04L 12/28 (2006.01)

(52) U.S. Cl. 370/400; 370/419; 370/458; 370/463; 370/498

(58) Field of Classification Search 370/354–356, 370/359, 362–364, 419–422, 458, 463, 498; 379/219, 224, 225, 229–234, 399.01
See application file for complete search history.

RELATED U.S. APPLICATION DATA
(63) CONTINUATION OF APPLICATION NO. 09/517,231, FILED ON MARCH 2, 2000, NOW PAT. NO. 6,795,448

(56) References Cited

U.S. PATENT DOCUMENTS

4,535,448	A *	8/1985	Baxter et al.	370/364
5,931,949	A *	8/1999	Perlman et al.	713/300
6,154,465	A *	11/2000	Pickett	370/466
6,266,340	B1	7/2001	Pickett et al.	370/442
6,335,927	B1 *	1/2002	Elliott et al.	370/352
6,463,138	B1 *	10/2002	Sherwood et al.	379/142.14
6,529,502	B2 *	3/2003	Sarkissian et al.	370/353
6,539,087	B1 *	3/2003	Walsh et al.	379/202.01
6,542,584	B1 *	4/2003	Sherwood et al.	379/88.18
6,795,448	B1 *	9/2004	Lee et al.	370/419
6,889,385	B1 *	5/2005	Rakib et al.	725/119

* cited by examiner

Primary Examiner—Hassan Kizou
Assistant Examiner—Bo Hui A Zhu
(74) *Attorney, Agent, or Firm*—Pillsbury Winthrop Shaw Pittman LLP

(57) ABSTRACT

A personal computer includes a PBX control program and one or more switch cards located in expansion board slots. The one or more switch cards are coupled to one or more port expansion units (PEU), which are coupled to telecommunication lines out to the various extension phones at the customer premises. Each PEU contains its own digital signal processor (DSP) so that distributed digital signal processing may be implemented to avoid any bottlenecks. One master PEU is coupled to a switch card by a time division multiplexed (TDMA) bus as well as a packet switched control bus, and all the other PEUs, if any, are coupled to the master PEU by extensions of the TDMA and packet switched buses. The TDMA bus carries PBX real time conversations while the packet switched bus carries control information, voicemail outbound message data packets, and inbound voicemail data packets.

14 Claims, 17 Drawing Sheets

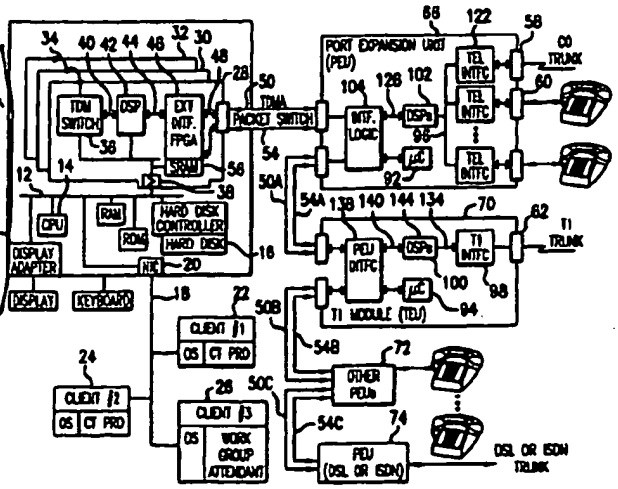

UNITED STATES PATENT AND TRADEMARK OFFICE

UNITED STATES DEPARTMENT OF COMMERCE
United States Patent and Trademark Office
Address: COMMISSIONER FOR PATENTS
P.O. Box 1450
Alexandria, Virginia 22313-1450
www.uspto.gov

APPL NO.	FILING OR 371 (c) DATE	ART UNIT	FIL FEE REC'D	ATTY.DOCKET NO	DRAWINGS	TOT CLMS	IND CLMS
10/931,617	09/01/2004	2661	770	81674-311625	17	18	2

27496
PILLSBURY WINTHROP LLP
725 S. FIGUEROA STREET
SUITE 2800
LOS ANGELES, CA 90017

OIPE IAP3 JUN 09 2009 PATENT & TRADEMARK OFFICE

CONFIRMATION NO. 1622

FILING RECEIPT

OC000000014252179

OC000000014252179

Date Mailed: 11/01/2004

Receipt is acknowledged of this regular Patent Application. It will be considered in its order and you will be notified as to the results of the examination. Be sure to provide the U.S. APPLICATION NUMBER, FILING DATE, NAME OF APPLICANT, and TITLE OF INVENTION when inquiring about this application. Fees transmitted by check or draft are subject to collection. Please verify the accuracy of the data presented on this receipt. **If an error is noted on this Filing Receipt, please write to the Office of Initial Patent Examination's Filing Receipt Corrections, facsimile number 703-746-9195. Please provide a copy of this Filing Receipt with the changes noted thereon. If you received a "Notice to File Missing Parts" for this application, please submit any corrections to this Filing Receipt with your reply to the Notice. When the USPTO processes the reply to the Notice, the USPTO will generate another Filing Receipt incorporating the requested corrections (if appropriate).**

Applicant(s)

Paul K. Lee, San Jose, CA;
Charles Arnold Lasswell, Olathe, KS;
Gregory J. Schultz, San Jose, CA;

Power of Attorney:

Ronald Fish--28843

Domestic Priority data as claimed by applicant

This application is a CON of 09/517,231 03/02/2000 PAT 6,795,448

Foreign Applications

If Required, Foreign Filing License Granted: 10/30/2004

The country code and number of your priority application, to be used for filing abroad under the Paris Convention, is US10/931,617

Projected Publication Date: 02/10/2005

Non-Publication Request: No

RECEIVED
PILLSBURY WINTHROP LLP
NOV 04 2004
081674 0311625
INTEL
N/A
MSA

Early Publication Request: No

Title

IP packet ready PBX expansion circuit for a conventional personal computer with expandable, distributed DSP architecture

Preliminary Class

370

LICENSE FOR FOREIGN FILING UNDER
Title 35, United States Code, Section 184
Title 37, Code of Federal Regulations, 5.11 & 5.15

GRANTED

The applicant has been granted a license under 35 U.S.C. 184, if the phrase "IF REQUIRED, FOREIGN FILING LICENSE GRANTED" followed by a date appears on this form. Such licenses are issued in all applications where the conditions for issuance of a license have been met, regardless of whether or not a license may be required as set forth in 37 CFR 5.15. The scope and limitations of this license are set forth in 37 CFR 5.15(a) unless an earlier license has been issued under 37 CFR 5.15(b). The license is subject to revocation upon written notification. The date indicated is the effective date of the license, unless an earlier license of similar scope has been granted under 37 CFR 5.13 or 5.14.

This license is to be retained by the licensee and may be used at any time on or after the effective date thereof unless it is revoked. This license is automatically transferred to any related applications(s) filed under 37 CFR 1.53(d). This license is not retroactive.

The grant of a license does not in any way lessen the responsibility of a licensee for the security of the subject matter as imposed by any Government contract or the provisions of existing laws relating to espionage and the national security or the export of technical data. Licensees should apprise themselves of current regulations especially with respect to certain countries, of other agencies, particularly the Office of Defense Trade Controls, Department of State (with respect to Arms, Munitions and Implements of War (22 CFR 121-128)); the Office of Export Administration, Department of Commerce (15 CFR 370.10 (j)); the Office of Foreign Assets Control, Department of Treasury (31 CFR Parts 500+) and the Department of Energy.

NOT GRANTED

No license under 35 U.S.C. 184 has been granted at this time, if the phrase "IF REQUIRED, FOREIGN FILING LICENSE GRANTED" DOES NOT appear on this form. Applicant may still petition for a license under 37 CFR 5.12, if a license is desired before the expiration of 6 months from the filing date of the application. If 6 months has lapsed from the filing date of this application and the licensee has not received any indication of a secrecy order under 35 U.S.C. 181, the licensee may foreign file the application pursuant to 37 CFR 5.15(b).

PTO/SB/05 (08-03)
Approved for use through 07/31/2006. OMB 0651-0032
U.S. Patent and Trademark Office. U.S. DEPARTMENT OF COMMERCE
Under the Paperwork Reduction Act of 1995, no persons are required to respond to a collection of information unless it displays a valid OMB control number.

OIPE IAP3
JUN 0 9 2009
PATENT & TRADEMARK OFFICE

UTILITY PATENT APPLICATION TRANSMITTAL

(Only for new nonprovisional applications under 37 CFR 1.53(b))

Attorney Docket No.	81674-311625
First Inventor	PAUL LEE, et al.
Title	See attached addendum
Express Mail Label No.	EV 235 026 675 US

APPLICATION ELEMENTS

See MPEP chapter 600 concerning utility patent application contents.

ADDRESS TO: Mail Stop Patent Application
Commissioner for Patents
P.O. Box 1450
Alexandria VA 22313-1450

1. [X] Fee Transmittal Form (e.g., PTO/SB/17)
   (Submit an original and a duplicate for fee processing)
2. [ ] Applicant claims small entity status. See 37 CFR 1.27.
3. [X] Specification [*Total Pages* 46]
   (preferred arrangement set forth below)
   - Descriptive title of the invention
   - Cross Reference to Related Applications
   - Statement Regarding Fed sponsored R & D
   - Reference to sequence listing, a table, or a computer program listing appendix
   - Background of the invention
   - Brief Summary of the Invention
   - Brief Description of the Drawings *(if filed)*
   - Detailed Description
   - Claim(s)
   - Abstract of the Disclosure
4. [X] Drawing(s) (*35 U.S.C. 113*) [*Total Sheets* 17]
5. Oath or Declaration [*Total Sheets* 06]
   a. [ ] Newly executed (original or copy)
   b. [X] Copy from a prior application (37 CFR 1.63(d))
   (for continuation/divisional with Box 18 completed)
      i. [ ] DELETION OF INVENTOR(S)
      Signed statement attached deleting inventor(s) name in the prior application, see 37 CFR 1.63(d)(2) and 1.33(b).
6. [X] Application Data Sheet. See 37 CFR 1.76
7. [ ] CD-ROM or CD-R in duplicate, large table or Computer Program *(Appendix)*
8. Nucleotide and/or Amino Acid Sequence Submission
   (if applicable, all necessary)
   a. [ ] Computer Readable Form (CRF)
   b. Specification Sequence Listing on:
      i. [ ] CD-ROM or CD-R (2 copies); or
      ii. [ ] Paper
   c. [ ] Statements verifying identity of above copies

ACCOMPANYING APPLICATION PARTS

9. [ ] Assignment Papers (cover sheet & document(s))
10. [ ] 37 CFR 3.73(b) Statement *(when there is an assignee)* [X] Power of Attorney
11. [ ] English Translation Document *(if applicable)*
12. [X] Information Disclosure Statement (IDS)/PTO-1449 [X] Copies of IDS Citations
13. [ ] Preliminary Amendment
14. [X] Return Receipt Postcard (MPEP 503) *(Should be specifically itemized)*
15. [ ] Certified Copy of Priority Document(s) *(if foreign priority is claimed)*
16. [ ] Nonpublication Request under 35 U.S.C. 122 (b)(2)(B)(i). Applicant must attach form PTO/SB/35 or its equivalent.
17. [ ] Other: .....

18. If a CONTINUING APPLICATION, *check appropriate box, and supply the requisite information below and in the first sentence of the specification following the title, or in an Application Data Sheet under 37 CFR 1.76:*

[X] Continuation [ ] Divisional [ ] Continuation-in-part (CIP) of prior application No.: 09/517,231

Prior application Information: *Examiner* D. Vincent *Art Unit:* 2661

For CONTINUATION OF DIVISIONAL APPS only; The entire disclosure of the prior application, from which an oath or declaration is supplied under Box 5b, is considered a part of the disclosure of the accompanying continuation or divisional application and is hereby incorporated by reference. The incorporation can only be relied upon when a portion has been inadvertently omitted from the submitted application parts.

19. CORRESPONDENCE ADDRESS

[X] Customer Number: 27496 *OR* [ ] Correspondence address below

Name					
Address					
City		*State*		*Zip Code*	
Country		*Telephone*		*Fax*	

Name (Print/Type)	Roger R. Wise	*Registration No. (Attorney/Agent)*	31204
Signature		*Date*	09/01/04

This collection of information is required ~~by 37 CFR 1.53(b)~~. The information is required to obtain or retain a benefit by the public which is to file (and by the USPTO to process) an application. Confidentiality is governed by 35 U.S.C. 122 and 37 CFR 1.14. This collection is estimated to take 12 minutes to complete, including gathering, preparing, and submitting the completed application form to the USPTO. Time will vary depending upon the individual case. Any comments on the amount of time you require to complete this form and/or suggestions for reducing this burden should be sent to the Chief Information Officer, U.S. Patent and Trademark Office, U.S. Department of Commerce, P.O. Box 1450, Alexandria, VA 22313-1450. DO NOT SEND FEES OR COMPLETED FORMS TO THIS ADDRESS. **SEND TO: Mail Stop Patent Application, Commissioner for Patents, P.O. Box 1450, Alexandria, VA 22313-1450.**

If you need assistance in completing the form, call 1-800-PTO-9199 and select option 2.

OIPE IAP3
JUN 0 9 2009
PATENT & TRADEMARK OFFICE

Addendum

Invention Title

IP PACKET READY PBX EXPANSION CIRCUIT FOR A CONVENTIONAL PERSONAL COMPUTER WITH EXPANDABLE DISTRIBUTED DSP ARCHITECTURE

UNITED STATES PATENT AND TRADEMARK OFFICE

UNITED STATES DEPARTMENT OF COMMERCE
United States Patent and Trademark Office
Address: COMMISSIONER FOR PATENTS
P.O. Box 1450
Alexandria, Virginia 22313-1450
www.uspto.gov

BRAKE HUGHES BELLERMANN LLP
C/O CPA Global
P.O. BOX 52050
MINNEAPOLIS, MN 55402

Mail Date: 04/20/2010

Applicant	: Laurent L.Y. Gomez	: DECISION ON REQUEST FOR
Patent Number	: 7587676	: RECALCULATION of PATENT
Issue Date	: 09/08/2009	: TERM ADJUSTMENT IN VIEW
Appliction No	: 10/931,648	: OF WYETH AND NOTICE OF INTENT TO
Filed	: 08/31/2004	: ISSUE CERTIFICATE OF CORRECTION
		:

The Request for Recalculation is **GRANTED** to the extent indicated.

The patent term adjustment has been determined to be **948** days. The USPTO will *sua sponte* issue a certificate of correction reflecting the amount of PTA days determined by the recalculation.

Prior to the issuance of the certificate of correction, the USPTO will afford patentee an opportunity to be heard and request reconsideration. Accordingly, patentee has **one month or thirty (30) days**, whichever is longer, to file a request for reconsideration of this patent term adjustment calculation. See 35 U.S.C. 154(b)(3)(B)(ii) and 37 CFR 1.322(a)(4). No extensions of time will be granted under 37 CFR 1.136.

Patentee should use document code PET.OP if electronically filing a request for reconsideration of this patent term adjustment calculation. The patentee must also include the information required by 37 CFR 1.705(b)(2) and the fee required by 37 CFR 1.18(e). If patentee does not file a timely request for reconsideration of this patent term adjustment calculation including the information required by 37 CFR 1.705(b)(2) and the fee required by 37 CFR 1.18(e), the USPTO will issue a certificate of correction reflecting the PTA determination noted above.

Patentee should be aware that in order to preserve the right to review in the United States District Court for the District of Columbia of the USPTO patent term adjustment determination, patentee must ensure that he or she also take the steps required under 35 U.S.C. 154(b)(4)(A) in a timely manner. Nothing in the request for recalculation should be construed as providing an alternative time frame for commencing a civil action under 35 U.S.C. 154(b)(4)(A).

Any questions concerning this decision should be directed to the Office of Patent Legal Administration at 571-272-7702.

UNITED STATES PATENT AND TRADEMARK OFFICE

UNITED STATES DEPARTMENT OF COMMERCE
United States Patent and Trademark Office
Address: COMMISSIONER FOR PATENTS
P.O. Box 1450
Alexandria, Virginia 22313-1450
www.uspto.gov

K&L Gates LLP
P.O. Box 1135
CHICAGO, IL 60690

Mail Date: 04/20/2010

Applicant	: Anthony J. Baerlocher	: DECISION ON REQUEST FOR
Patent Number	: 7614947	: RECALCULATION of PATENT
Issue Date	: 11/10/2009	: TERM ADJUSTMENT IN VIEW
Appliction No	: 10/931,656	: OF WYETH AND NOTICE OF INTENT TO
Filed	: 09/01/2004	: ISSUE CERTIFICATE OF CORRECTION
		:

The Request for Recalculation is **GRANTED** to the extent indicated.

The patent term adjustment has been determined to be **789** days. The USPTO will *sua sponte* issue a certificate of correction reflecting the amount of PTA days determined by the recalculation.

Prior to the issuance of the certificate of correction, the USPTO will afford patentee an opportunity to be heard and request reconsideration. Accordingly, patentee has **one month or thirty (30) days**, whichever is longer, to file a request for reconsideration of this patent term adjustment calculation. See 35 U.S.C. 154(b)(3)(B)(ii) and 37 CFR 1.322(a)(4). No extensions of time will be granted under 37 CFR 1.136.

Patentee should use document code PET.OP if electronically filing a request for reconsideration of this patent term adjustment calculation. The patentee must also include the information required by 37 CFR 1.705(b)(2) and the fee required by 37 CFR 1.18(e). If patentee does not file a timely request for reconsideration of this patent term adjustment calculation including the information required by 37 CFR 1.705(b)(2) and the fee required by 37 CFR 1.18(e), the USPTO will issue a certificate of correction reflecting the PTA determination noted above.

Patentee should be aware that in order to preserve the right to review in the United States District Court for the District of Columbia of the USPTO patent term adjustment determination, patentee must ensure that he or she also take the steps required under 35 U.S.C. 154(b)(4)(A) in a timely manner. Nothing in the request for recalculation should be construed as providing an alternative time frame for commencing a civil action under 35 U.S.C. 154(b)(4)(A).

Any questions concerning this decision should be directed to the Office of Patent Legal Administration at 571-272-7702.

UNITED STATES PATENT AND TRADEMARK OFFICE

Commissioner for Patents
United States Patent and Trademark Office
P.O. Box 1450
Alexandria, VA 22313-1450
www.uspto.gov

PFIZER INC.
150 EAST 42ND STREET
5TH FLOOR – STOP 49
NEW YORK, NY 10027-5612

COPY MAILED

MAY 30 2007

OFFICE OF PETITIONS

In re Application of	:	
Romualdo Forino et al	:	
Application No. 10/931,659	:	DECISION ON PETITION
Filed: September 1, 2004	:	UNDER 37 CFR 1.78(a)(3)
Attorney Docket No. PC27194A	:	

This is a decision on the petition treated under 37 CFR 1.78(a)(3) and 1.78(a)(6), filed March 2, 2007, to accept an unintentionally delayed claim under 35 U.S.C. §§ 120 and 365(c) for the benefit of priority to prior-filed international Application No. PCT/EP03/01948, filed February 26, 2003, and provisional Application No. 60/360,684, filed March 1, 2002, as set forth in the concurrently filed amendment.

The petition is **DISMISSED.**

A petition for acceptance of a claim for late priority under 37 CFR §§ 1.78(a)(3) and 1.78(a)(6) is only applicable to those applications filed on or after November 29, 2000. Further, the petition is appropriate only after the expiration of the period specified in 37 CFR §§ 1.78(a)(2)(ii) and 1.78(a)(5)(ii). In addition, the petition under 37 CFR §§ 1.78(a)(3) and 1.78(a)(6) must be accompanied by:

(1) the reference required by 35 U.S.C. §§ 120 and 119(e) and 37 CFR §§ 1.78(a)(2)(i) and 1.78(a)(5)(i) of the prior-filed application, unless previously submitted;
(2) the surcharge set forth in § 1.17(t); and
(3) a statement that the entire delay between the date the claim was due under 37 CFR §§ 1.78(a)(2)(ii) and 1.78(a)(5)(ii) and the date the claim was filed was unintentional. The Director may require additional information where there is a question whether the delay was unintentional.

Additionally, the present nonprovisional application must be pending at the time of filing of the reference to the prior-filed provisional application(s) as required by 37 CFR 1.78(a)(5)(ii). Further, the nonprovisional or international application(s) claiming the benefit of priority to the prior-filed provisional application(s) must have been filed within twelve months of the filing date of the prior-filed provisional application(s).

The amendment submitted with the petition reads as follows:

> The present application is the National Stage filing of International Application No. PCT/EP03/01948 filed February 26, 2003, and claims the benefit of U.S. Provisional Application No. 60/360,684, filed March 1, 2002.

The petition also indicates that this application is the 35 U.S.C. § 371 national stage filing of the above-noted PCT application. However, in reviewing the papers submitted at the time of filing, the transmittal letter is for a utility application filed under the provisions of 35 U.S.C. § 111(a) and 37 CFR 53(b). Therefore, the amendment is incorrect in stating that this application is the "National Stage filing of International Application No. PCT/EP03/01948."

The amendment submitted fails to provide a specific reference to the international application. In this regard, the specific reference required must identify the parent international application by international application number and international filing date and indicate the relationship of the application (*i.e.*, continuation, continuation-in-part, or division). *See* 37 CFR 1.78(a)(2)(i) and MPEP § 201.11. An example of an appropriate first sentence of the specification is, for example: This is a continuation of International Application PCT/EP03/01948, with an international filing date of February 26, 2003, now abandoned, which claims benefit of priority to provisional Application No. 60/360,684, filed March 1, 2002.

As the amendment submitted does not indicate the relationship of this application to the above-noted PCT application, the petition must be dismissed. If reconsideration of this decision is desired, a renewed petition under 37 CFR 1.78(a)(3) and 1.78(a)(6) and an amendment or Supplemental Application Data Sheet complying with the provisions of 37 CFR 1.121 and 37 CFR 1.76(b)(5) must be submitted. No additional petition fee is required.

Further correspondence with respect to this matter should be addressed as follows:

By mail:	Mail Stop PETITION Commissioner for Patents Post Office Box 1450 Alexandria, VA 22313-1450
By hand:	Customer Service Window Mail Stop Petitions Randolph Building 401 Dulany Street Alexandria, VA 22314
By fax:	(571) 273-8300 ATTN: Office of Petitions

Any questions concerning this matter may be directed to the undersigned at (571) 272-3218.

Frances Hicks

Frances Hicks
Petitions Examiner
Office of Petitions

UNITED STATES PATENT AND TRADEMARK OFFICE

Commissioner for Patents
United States Patent and Trademark Office
P.O. Box 1450
Alexandria, VA 22313-1450
www.uspto.gov

Date Mailed : 05/10/10

Patent No. : 7641468 B2
Patent Issued : 01/05/10
Docket No. : **200401445-1**

Re: Request for Certificate of Correction

Consideration has been given your request for the issuance of a certificate of correction for the above-identified patent under the provisions of Rule(s) 1.322.

Respecting the alleged errors in the documents filed on 04/09/10; please see attachments. **"Therefore, no correction(s) is in order here under United States Codes (U.S.C.) 254 and the Code of Federal Regulation (C.F.R.) 1322."**

In view of the foregoing, your request in this matter is hereby denied.

Lamonte M. Newsome
For Mary Diggs, Supervisor
Decisions & Certificates
Of Correction Branch
(703) 305-8309 or (703) 756-1574

HEWLETT-PACKARD COMPANY
Intellectual Property Administration
3404 E. Harmony Road
Mail Stop 35
FORT COLLINS CO 80528

LMN

Paper No.: _____

DATE : 04/16/10

TO SPE OF : ART UNIT 1791

SUBJECT : Request for Certificate of Correction for Appl. No.: 10931672 Patent No.: 7641468

Please respond to this request for a certificate of correction within 7 days.

FOR IFW FILES:

Please review the requested changes/corrections as shown in the **COCIN** document(s) in the IFW application image. No new matter should be introduced, nor should the scope or meaning of the claims be changed.

Please complete the response (see below) and forward the completed response to scanning using document code **COCX**.

FOR PAPER FILES:

Please review the requested changes/corrections as shown in the attached certificate of correction. Please complete this form (see below) and forward it with the file to:

Certificates of Correction Branch (C of C)
Randolph Square 9D40-D
Palm Location 7580
You can fax the Directors/SPE response to 571 270 9990

Lamonte Nassome

Certificates of Correction Bran

703-756-1574

Thank You For Your Assistance

The request for issuing the above-identified correction(s) is hereby:
Note your decision on the appropriate box.

☐ **Approved**	**All** changes apply.
☐ **Approved in Part** changes **do not** apply.	Specify below which
X **Denied** below.	State the reasons for denial

Comments: The requested changes do not appear to be Office error and the Patent as issued appears correct.

/Steven P. Griffin/ 1791
SPE Art Unit

UNITED STATES PATENT AND TRADEMARK OFFICE

UNITED STATES DEPARTMENT OF COMMERCE
United States Patent and Trademark Office
Address: COMMISSIONER FOR PATENTS
P.O. Box 1450
Alexandria, Virginia 22313-1450
www.uspto.gov

HONEYWELL INTERNATIONAL INC.
PATENT SERVICES
101 COLUMBIA ROAD
P O BOX 2245
MORRISTOWN, NJ 07962-2245

Mail Date: 04/21/2010

Applicant	: James A. Cox	: DECISION ON REQUEST FOR
Patent Number	: 7612871	: RECALCULATION of PATENT
Issue Date	: 11/03/2009	: TERM ADJUSTMENT IN VIEW
Appliction No	: 10/931,686	: OF WYETH AND NOTICE OF INTENT TO
Filed	: 09/01/2004	: ISSUE CERTIFICATE OF CORRECTION
		:

The Request for Recalculation is **GRANTED** to the extent indicated.

The patent term adjustment has been determined to be **1225** days. The USPTO will *sua sponte* issue a certificate of correction reflecting the amount of PTA days determined by the recalculation.

Prior to the issuance of the certificate of correction, the USPTO will afford patentee an opportunity to be heard and request reconsideration. Accordingly, patentee has **one month or thirty (30) days**, whichever is longer, to file a request for reconsideration of this patent term adjustment calculation. See 35 U.S.C. 154(b)(3)(B)(ii) and 37 CFR 1.322(a)(4). No extensions of time will be granted under 37 CFR 1.136.

Patentee should use document code PET.OP if electronically filing a request for reconsideration of this patent term adjustment calculation. The patentee must also include the information required by 37 CFR 1.705(b)(2) and the fee required by 37 CFR 1.18(e). If patentee does not file a timely request for reconsideration of this patent term adjustment calculation including the information required by 37 CFR 1.705(b)(2) and the fee required by 37 CFR 1.18(e), the USPTO will issue a certificate of correction reflecting the PTA determination noted above.

Patentee should be aware that in order to preserve the right to review in the United States District Court for the District of Columbia of the USPTO patent term adjustment determination, patentee must ensure that he or she also take the steps required under 35 U.S.C. 154(b)(4)(A) in a timely manner. Nothing in the request for recalculation should be construed as providing an alternative time frame for commencing a civil action under 35 U.S.C. 154(b)(4)(A).

Any questions concerning this decision should be directed to the Office of Patent Legal Administration at 571-272-7702.

SPE RESPONSE FOR CERTIFICATE OF CORRECTION

Paper No.: _____

DATE : 2/20/09

TO SPE OF : ART UNIT 2877

SUBJECT : Request for Certificate of Correction for Appl. No.: 10931703 Patent No.: 7277186

Please respond to this request for a certificate of correction within 7 days.

FOR IFW FILES:

Please review the requested changes/corrections as shown in the **COCIN** document(s) in the IFW application image. No new matter should be introduced, nor should the scope or meaning of the claims be changed.

Please complete the response (see below) and forward the completed response to scanning using document code **COCX**.

FOR PAPER FILES:

Please review the requested changes/corrections as shown in the attached certificate of correction. Please complete this form (see below) and forward it with the file to:

Certificates of Correction Branch (CofC)
South Tower - 9A22
Palm Location 7580

Valerie Sands
Certificates of Correction Branch
703-308-9390 ext. 114

Thank You For Your Assistance

The request for issuing the above-identified correction(s) is hereby:
Note your decision on the appropriate box.

- ☒ **Approved** — All changes apply.
- ☐ **Approved in Part** — Specify below which changes **do not** apply.
- ☐ **Denied** — State the reasons for denial below.

Comments: The correction is approved.

/Gregory J. Toatley, Jr./ SPE AU 2877

SPE **Art Unit**

UNITED STATES PATENT AND TRADEMARK OFFICE

Commissioner for Patents
United States Patent and Trademark Office
P.O. Box 1450
Alexandria, VA 22313-1450
www.uspto.gov

CHRISTOPHER L. HOLT
WESTMAN, CHAMPLIN & KELLY, P.A.
SUITE1400- INTERNATIONAL CENTRE
900 SECOND AVENUE SOUTH
MINNEAPOLIS, MN 55402-3319

MAILED

OCT 08 2009

OFFICE OF PETITIONS

In re Application of	:	
Patrick J. Kavanaugh	:	
Application No. 10/931,708	:	DECISION ON PETITION
Filed: September 1, 2004	:	
Attorney Docket No. C129.12-0001	:	

This is a decision on the petition under the unintentional provisions of 37 CFR 1.137(b), filed August 3, 2009, to revive the above-identified application.

The petition is **GRANTED**.

This application became abandoned for failure to timely submit corrected drawings on or before June 9, 2009, as required by the Notice of Allowance and Fee(s) Due and the Notice of Allowability, mailed March 9, 2009. Accordingly, the date of abandonment of this application is June 10, 2009. A Notice of Abandonment was mailed July 2, 2009.

37 CFR 1.137(b)(3) requires a statement that "the entire delay in filing the required reply from the due date for the reply until the filing of a grantable petition pursuant to 37 CFR 1.137(b) was unintentional." Since the statement appearing in the petition varies from the language required by 37 CFR 1.137(b)(3), the statement is being construed as the required statement. Petitioner must notify the Office if this is not a correct reading of the statement appearing in the petition.

The petition satisfies the requirements of 37 CFR 1.137(b) in that petitioner has supplied (1) the reply in the form of replacement drawings, (2) the petition fee of $810; and (3) an adequate statement of unintentional delay.

Telephone inquiries concerning this decision should be directed to Alicia Kelley at (571)272-6059.

This application is being referred to the Office of Data Management for processing into a patent.

/SDB/

Sherry D. Brinkley
Petitions Examiner
Office of Petitions

UNITED STATES PATENT AND TRADEMARK OFFICE

UNITED STATES DEPARTMENT OF COMMERCE
United States Patent and Trademark Office
Address: COMMISSIONER FOR PATENTS
P.O. Box 1450
Alexandria, Virginia 22313-1450
www.uspto.gov

PHILIP S. JOHNSON
JOHNSON & JOHNSON
ONE JOHNSON & JOHNSON PLAZA
NEW BRUNSWICK, NJ 08933-7003

Mail Date: 04/20/2010

Applicant	: James Iain Rodgers	: DECISION ON REQUEST FOR
Patent Number	: 7572356	: RECALCULATION of PATENT
Issue Date	: 08/11/2009	: TERM ADJUSTMENT IN VIEW
Appliction No	: 10/931,724	: OF WYETH
Filed	: 08/31/2004	:
		:

The Patentee's Request for Recalculation is **DISMISSED.**

This Request is deemed ineligible for consideration for one or more of the following reasons:

(A). The patent for which PTA recalculation is requested is either a design or reissue application or is a reexamination proceeding;

(B). The patent for which PTA recalculation is requested resulted from a utility or plant application filed under 35 USC 111(a) before May 29, 2000 and no CPA filed in the application on/after May 29, 2000;

(C). The patent for which PTA recalculation is requested resulted from an international application in which the international filing date was before May 29, 2000 and no CPA filed in the application on/after May 29, 2000;

(D). The patent for which PTA recalculation is requested issued on/after March 2, 2010;

(E). The Request for Recalculation was filed more than 180 days after the grant date of the patent and the request was not filed within two months of a dismissal of a request for reconsideration of the of the patent term under 37 CFR 1.705(d);

(F). The Request for Recalculation is not solely limited to USPTO pre-Wyeth interpretation of 35 U.S.C. 154(b)(2)(A);

or

(G). A civil action was filed pursuant to 35 U.S.C. 154(b)(4)(A)concerning the same patent at issue in this request.

Patentee may file a reply to this decision dismissing the Request for Recalculation. Patentee must file such reply within one month or thirty days, whichever is longer, of the mail date of the decision dismissing the Request for Recalculation. No fee is required if patentee is asserting in the reply that the dismissal for ineligibility is improper.

Patentee should use document code PET.OP if electronically filing a reply to this dismissal. If the USPTO finds that the request was improperly deemed ineligible, the USPTO will mail applicant a recalculation determination.

Patentee should be aware that in order to preserve the right to review in the United States District Court for the District of Columbia of the USPTO patent term adjustment determination, patentee must ensure that he or she also take the steps required under 35 U.S.C. 154(b)(4)(A). Nothing in the request for recalculation should be construed as providing an alternative time frame for commencing a civil action under 35 U.S.C. 154 (b)(4)(A).

Any questions concerning this decision should be directed to the Office of Patent Legal Administration at 571-272-7702.

UNITED STATES PATENT AND TRADEMARK OFFICE

UNITED STATES DEPARTMENT OF COMMERCE
United States Patent and Trademark Office
Address: COMMISSIONER FOR PATENTS
P.O. Box 1450
Alexandria, Virginia 22313-1450
www.uspto.gov

PHILIP S. JOHNSON
JOHNSON & JOHNSON
ONE JOHNSON & JOHNSON PLAZA
NEW BRUNSWICK, NJ 08933-7003

Mail Date: 05/17/2010

Applicant : James Iain Rodgers
Patent Number : 7572356
Issue Date : 08/11/2009
Application No : 10/931,724
Filed : 08/31/2004

: NOTICE CONCERNING IMPROPER
: DISMISSAL OF THE REQUEST
: FOR RECALCULATION OF
: PATENT TERM ADJUSTMENT
: IN VIEW OF WYETH

The United States Patent and Trademark Office (USPTO) discovered that in processing the recent recalculation decisions mailed in response to patentee's filed Request for Recalculation of Patent Term Adjustment in view of Wyeth, the USPTO mistakenly dismissed a small number of requests as ineligible. The dismissals involve requests that were filed on February 9-12, 2010, for patents that were granted on August 11, 2009. Any request that was filed on February 8, 2010 was properly deemed eligible for patent term adjustment (PTA) and was recalculated.

Patents meeting the above criteria were eligible because the USPTO was closed February 8-11, 2010, due to a snowstorm. See Closing of the United States Patent and Trademark Office from Monday February, 8, 2010, through Thursday, February 11, 2010, 1352 *Off. Gaz. Pat. Office* 146 (March 16, 2010). The Office considered each day from Monday, February 8, 2010, through Thursday, February 11, 2010, to be a "Federal holiday within the District of Columbia" under 35 U.S.C. § 21(b) and 37 CFR 1.6, 1.7, 1.9, 2.2(d), 2.195 and 2.196. Any actions that were due from Monday, February, 8, 2010, through Thursday, February 11, 2010, (or the preceding Saturday (February 6, 2010) or Sunday (February 7, 2010)) will be considered timely if the action was taken on the next succeeding business day on which the USPTO was open, which was February 12, 2010.

This notice **VACATES** the previous mailed decision in the patented file that deemed patentee ineligible for the request for recalculation. Patentee's request for recalculation is GRANTED.

The patent term adjustment has been determined to be **1304** days. The USPTO will *sua sponte* issue a certificate of correction reflecting the amount of PTA days determined by the recalculation.

Prior to the issuance of the certificate of correction, the USPTO will afford patentee an opportunity to be heard and request reconsideration. Accordingly, patentee has **one month or thirty (30) days** from the mail date of this notice, whichever is longer, to file a request for reconsideration of this PTA calculation. See 35 U.S.C. § 154(b)(3)(B)(ii) and 37 CFR 1.322(a)(4).

Patentee should use document code PET.OP if electronically filing a request for reconsideration of this PTA calculation. The patentee must also include the information required by 37 CFR 1.705(b)(2) and the fee required by 37 CFR 1.18(e). If patentee does not file a timely request for reconsideration of this PTA calculation, including the information required by 37 CFR 1.705(b)(2) and the fee required by 37 1.18(e), the USPTO will issue a certificate of correction reflecting the PTA determination noted above.

Patentee should be aware that in order to preserve the right of review of the USPTO's PTA deterimation in the United States District Court for the District of Columbia, patentee must ensure that the steps required under 35 U.S.C. § 154(b)(4) are taken in a timely manner. Nothing in the request for recalculation should be construed as providing an alternative time frame for commencing a civil action under 35 U.S.C. § 154(b)(4).

UNITED STATES PATENT AND TRADEMARK OFFICE

COMMISSIONER FOR PATENTS
UNITED STATES PATENT AND TRADEMARK OFFICE
P.O. BOX 1450
ALEXANDRIA, VA 22313-1450
www.uspto.gov

THE LAW OFFICES OF
BORIS G. TANKHILEVICH
536 N. CIVIC DRIVE
SUITE A
WALNUT CREEK, CA 94597

COPY MAILED

SEP 29 2005

OFFICE OF PETITIONS

In re Application of
Paul H. Willms et al
Application No. 10/931,730
Filed: August 31, 2004
Attorney Docket No. Paul-1/Tank-238

DECISION ON PETITION
TO MAKE SPECIAL
37 CFR 1.102(c)

This is a decision on the petition under 37 CFR 1.102(c), filed November 2, 2004 to make the above-identified application special.

The petition requests that the above-identified application be made as set forth in M.P.E.P. § 708.02, Section XI: Countering Terrorism.

The petition is **GRANTED**.

M.P.E.P. §708.02 (XI), which sets out the prerequisites for a grantable petition for Inventions For Countering Terrorism under 37 C.F.R. § 102(c), states in relevant part:

International terrorism as defined in 18 U.S.C. § 2331 includes "activities that – (A) involve violent acts or acts dangerous to human life that are a violation of the criminal laws of the United States or of any State, or that would be a criminal violation if committed within the jurisdiction of the United States or of any State; [and] (B) appear to be intended - (i) to intimidate or coerce a civilian population; (ii) to influence the policy of a government by intimidation or coercion; or (iii) to affect the conduct of a government by assassination or kidnapping...." The types of technology for countering terrorism could include, but are not limited to, systems for detecting/identifying explosives, aircraft sensors/security systems, and vehicular barricades/disabling systems.

Applicants who desire that an application relating to inventions for countering terrorism be made special should file a petition...The petition for special status should be accompanied by a statement explaining how the invention contributes to countering terrorism.

The instant petition meets all the requirements set forth above. Accordingly, the above-identified application has been accorded "special" status.

The $130.00 petition fee submitted is unnecessary. Petitioner may request a refund of this fee by writing to: Mail Stop 16, Director of the US Patent and Trademark Office, P.O. Box 1450, Alexandria, VA 22313-1450. A copy of this decision should accompany petitioner's request.

Telephone inquires concerning this decision should be directed to Wan Laymon at (571) 272-3220.

All other inquires concerning either the examination or status of the application should be directed to the Technology Center.

This matter is being referred to the Technology Center Art Unit 2632 for expedited prosecution.

Denise Pothier
Petitions Examiner
Office of Petitions

UNITED STATES PATENT AND TRADEMARK OFFICE

UNITED STATES DEPARTMENT OF COMMERCE
United States Patent and Trademark Office
Address: COMMISSIONER FOR PATENTS
P.O. Box 1450
Alexandria, Virginia 22313-1450
www.uspto.gov

APPLICATION NO.	FILING DATE	FIRST NAMED INVENTOR	ATTORNEY DOCKET NO.	CONFIRMATION NO.
10/931,780	09/01/2004	John D. Shaughnessy	D6432CIP3	3714

7590 09/30/2008
Dr. Benjamin Aaron Adler
ADLER & ASSOCIATES
8011 Candle Lane
Houston, TX 77071

EXAMINER
ZHOU, SHUBO

ART UNIT	PAPER NUMBER
1631	

MAIL DATE	DELIVERY MODE
09/30/2008	PAPER

Please find below and/or attached an Office communication concerning this application or proceeding.

The time period for reply, if any, is set in the attached communication.

UNITED STATES PATENT AND TRADEMARK OFFICE

COMMISSIONER FOR PATENTS
UNITED STATES PATENT AND TRADEMARK OFFICE
P.O. BOX 1450
ALEXANDRIA, VA 22313-1450
www.uspto.gov

In re Patent No. SHAUGHNESSY ET AL. Issue Date: 5/13/08 Appl No.: 10/931,780 Filed: September 01, 2004 For: 37 CFR1.324	**DECISION GRANTING PETITION** *37 CFR 1.324*

This is a decision on the petition filed 6/6/08 to correct inventorship under 37 CFR 1.324.

The petition is granted.

The patented file is being forwarded to Certificate of Corrections Branch for issuance of a certificate naming only the actual inventor or inventors.

/Marjorie Moran/
Supervisory Patent Examiner, Art Unit 1631

Marjorie Moran
Supervisory Patent Examiner
Art Unit 1631
Technology Center 1600

Dr. Benjamin Aaron Adler
ADLER & ASSOCIATES
8011 Candle Lane
Houston, TX 77071

SPE RESPONSE FOR CERTIFICATE OF CORRECTION

Paper No.: _____

DATE : 6-29-07

TO SPE OF : **Technology Center** 3738

10/931788

SUBJECT : Request for Certificate of Correction on Patent No.: 7226482 B2

A response is requested with respect to the accompanying request for a certificate of correction.

Please complete this form and return with file, within **7** days to:

Palm location **7580, Certificates of Correction Branch – South Tower – 9A22**

If response is for an IFW, **return to employee (named below) via PUBSCofC Team in MADRAS.**

With respect to the change(s) requested, correcting Office and/or Applicant's errors, should the patent read as shown in the certificate of correction (COCIN)? No new matter should be introduced, nor should the scope or meaning of the claims be changed.

Thank You For Your Assistance

Elisha Evans

Certificates of Correction Branch

Tel. No. 703-308-9390 EXT 110

The request for issuing the above-identified correction(s) is hereby:

Note your decision on the appropriate box.

- ☒ **Approved** — **All** changes apply.
- ☐ **Approved in Part** — Specify below which changes **do not** apply.
- ☐ **Denied** — State the reasons for denial below.

Comments:

Please enter provisional application date.

ANHTUAN T. NGUYEN
SUPERVISORY PATENT EXAMINER

SPE

8/21/07.

Art Unit

UNITED STATES PATENT AND TRADEMARK OFFICE

UNITED STATES DEPARTMENT OF COMMERCE
United States Patent and Trademark Office
Address: COMMISSIONER FOR PATENTS
P.O. Box 1450
Alexandria, Virginia 22313-1450
www.uspto.gov

IPLM GROUP, P.A.
POST OFFICE BOX 18455
MINNEAPOLIS, MN 55418

Mail Date: 04/21/2010

Applicant	: Brian G. Eck	: DECISION ON REQUEST FOR
Patent Number	: 7578759	: RECALCULATION of PATENT
Issue Date	: 08/25/2009	: TERM ADJUSTMENT IN VIEW
Appliction No	: 10/931,797	: OF WYETH AND NOTICE OF INTENT TO
Filed	: 09/01/2004	: ISSUE CERTIFICATE OF CORRECTION
		:

The Request for Recalculation is **GRANTED** to the extent indicated.

The patent term adjustment has been determined to be **1161** days. The USPTO will *sua sponte* issue a certificate of correction reflecting the amount of PTA days determined by the recalculation.

Prior to the issuance of the certificate of correction, the USPTO will afford patentee an opportunity to be heard and request reconsideration. Accordingly, patentee has **one month or thirty (30) days**, whichever is longer, to file a request for reconsideration of this patent term adjustment calculation. See 35 U.S.C. 154(b)(3)(B)(ii) and 37 CFR 1.322(a)(4). No extensions of time will be granted under 37 CFR 1.136.

Patentee should use document code PET.OP if electronically filing a request for reconsideration of this patent term adjustment calculation. The patentee must also include the information required by 37 CFR 1.705(b)(2) and the fee required by 37 CFR 1.18(e). If patentee does not file a timely request for reconsideration of this patent term adjustment calculation including the information required by 37 CFR 1.705(b)(2) and the fee required by 37 CFR 1.18(e), the USPTO will issue a certificate of correction reflecting the PTA determination noted above.

Patentee should be aware that in order to preserve the right to review in the United States District Court for the District of Columbia of the USPTO patent term adjustment determination, patentee must ensure that he or she also take the steps required under 35 U.S.C. 154(b)(4)(A) in a timely manner. Nothing in the request for recalculation should be construed as providing an alternative time frame for commencing a civil action under 35 U.S.C. 154(b)(4)(A).

Any questions concerning this decision should be directed to the Office of Patent Legal Administration at 571-272-7702.

UNITED STATES PATENT AND TRADEMARK OFFICE

Commissioner for Patents
United States Patent and Trademark Office
P.O. Box 1450
Alexandria, VA 22313-1450
www.uspto.gov

HARNESS, DICKEY & PERICE, PLC
P. O. BOX 828
BLOOMFIELD HILLS, MI 48303

COPY MAILED

JAN 26 2007

OFFICE OF PETITIONS

In re Application of	:	
Hidenobu Ota et al	:	
Application No. 10/931,813	:	DECISION GRANTING PETITION
Filed: September 1, 2004	:	UNDER 37 CFR 1.313(c)(2)
Attorney Docket No. 9319S-000850	:	

This is a decision on the petition, filed January 25, 2007, under 37 CFR 1.313(c)(2) to withdraw the above-identified application from issue after payment of the issue fee.

The petition is **GRANTED**.

The above-identified application is withdrawn from issue for consideration of a submission under 37 CFR 1.114 (request for continued examination). See 37 CFR 1.313(c)(2).

Petitioner is advised that the issue fee paid on December 11, 2006 in the above-identified application cannot be refunded. If, however, the above-identified application is again allowed, petitioner may request that it be applied towards the issue fee required by the new Notice of Allowance.[1]

Telephone inquiries should be directed to the undersigned at (571) 272-3218.

This matter is being referred to Technology Center AU 2873 for processing of the request for continued examination under 37 CFR 1.114 and for consideration of the Information Disclosure Statement.

Frances Hicks
Petitions Examiner
Office of Petitions

C:\Documents and Settings\FHicks\My Documents\470\Jan10\931813.wpd

---

[1] *The request to apply the issue fee to the new Notice may be satisfied by completing and returning the new Part B – Fee(s) Transmittal Form (along with any balance due at the time of submission). Petitioner is advised that the Issue Fee Transmittal Form must be completed and timely submitted to avoid abandonment.*

UNITED STATES PATENT AND TRADEMARK OFFICE

COMMISSIONER FOR PATENTS
UNITED STATES PATENT AND TRADEMARK OFFICE
P.O. BOX 1450
ALEXANDRIA, VA 22313-1450
www.uspto.gov

KIRKPATRICK & LOCKHART NICHOLSON GRAHAM LLP
535 SMITHFIELD STREET
PITTSBURGH, PA 15222

COPY MAILED
MAY 25 2006
OFFICE OF PETITIONS

In re Application of	:	
Gary F. Friedline, et al.	:	
Application No. 10/931,837	:	ON PETITION
Filed: September 1, 2004	:	
Attorney Docket No.: 020720DIV	:	

This is a decision on the petition, filed May 24, 2006, under 37 CFR 1.313(c)(2) to withdraw the above-identified application from issue after payment of the issue fee.

The petition is **GRANTED**.

The above-identified application is withdrawn from issue for consideration of a submission under 37 CFR 1.114 (request for continued examination). See 37 CFR 1.313(c)(2).

Petitioner is advised that the issue fee paid on December 19, 2005, in the above-identified application cannot be refunded. If, however, the above-identified application is again allowed, petitioner may request that it be applied towards the issue fee required by the new Notice of Allowance. [1]

Telephone inquiries relating to this decision should be directed to the undersigned at (571) 272-3204.

The application is being referred to Technology Center AU 3754 for further processing of the request for continued examination under 37 CFR 1.114.

Sherry D. Brinkley
Petitions Examiner
Office of Petitions

[1]The request to apply the issue fee to the new Notice may be satisfied by completing and returning the new Issue Fee Transmittal Form PTOL-85(b), which includes the following language thereon: " Commissioner for Patents is requested to apply the Issue Fee and Publication Fee (if any) or re-apply any previously paid issue fee to the application identified above." Petitioner is advised that, whether a fee is indicated as being due or not, the Issue Fee Transmittal Form **must** be completed and timely submitted to avoid abandonment. Note the language in bold text on the first page of the Notice of Allowance and Fee(s) Due (PTOL-85).

UNITED STATES PATENT AND TRADEMARK OFFICE

COMMISSIONER FOR PATENTS
UNITED STATES PATENT AND TRADEMARK OFFICE
P.O. BOX 1450
ALEXANDRIA, VA 22313-1450
www.uspto.gov

KIRKPATRICK & LOCKHART NICHOLSON GRAHAM LLP
535 SMITHFIELD STREET
PITTSBURGH, PA 15222

COPY MAILED
AUG 17 2006
OFFICE OF PETITIONS

In re Application of	:	
Gary W. Friedline, et al.	:	
Application No. 10/931,837	:	ON PETITION
Filed: September 1, 2004	:	
Attorney Docket No.: 020720DIV	:	

This is a decision on the petition, filed August 16, 2006, under 37 CFR 1.313(c)(2) to withdraw the above-identified application from issue after payment of the issue fee.

The petition is **GRANTED**.

The above-identified application is withdrawn from issue for consideration of a submission under 37 CFR 1.114 (request for continued examination). See 37 CFR 1.313(c)(2).

Petitioner is advised that the issue fee paid on June 19, 2006, in the above-identified application cannot be refunded. If, however, the above-identified application is again allowed, petitioner may request that it be applied towards the issue fee required by the new Notice of Allowance. [1]

Telephone inquiries relating to this decision should be directed to the undersigned at (571) 272-3204.

The application is being referred to Technology Center AU 3754 for further processing of the request for continued examination under 37 CFR 1.114.

Sherry D. Brinkley
Petitions Examiner
Office of Petitions

[1]The request to apply the issue fee to the new Notice may be satisfied by completing and returning the new Issue Fee Transmittal Form PTOL-85(b), which includes the following language thereon: "Commissioner for Patents is requested to apply the Issue Fee and Publication Fee (if any) or re-apply any previously paid issue fee to the application identified above." Petitioner is advised that, whether a fee is indicated as being due or not, the Issue Fee Transmittal Form **must** be completed and timely submitted to avoid abandonment. Note the language in bold text on the first page of the Notice of Allowance and Fee(s) Due (PTOL-85).

UNITED STATES PATENT AND TRADEMARK OFFICE

Commissioner for Patents
United States Patent and Trademark Office
P.O. Box 1450
Alexandria, VA 22313-1450
www.uspto.gov

KLEIN, O'NEILL & SINGH, LLP
43 CORPORATE PARK, SUITE 204
IRVINE, CA 92606

COPY MAILED

SEP 22 2006

OFFICE OF PETITIONS

In re Application of
SCALFANI, et al.
Application No. 10/931,849
Filed: September 1, 2004
Attorney Docket No. 937-01-PA-T

DECISION ON PETITION
TO WITHDRAW
FROM RECORD

This is a decision on the Request to Withdraw as attorney or agent of record under 37 C.F.R. § 1.36(b), filed May 12, 2006.

The request is **NOT APPROVED**.

A grantable request to withdraw as attorney/agent of record must be signed by every attorney/agent seeking to withdraw or contain a clear indication that one attorney is signing on behalf of another/others. A request to withdraw will not be approved unless at least 30 (thirty) days would remain between the date of approval and the later of the expiration date of a time to file a response or the expiration date of the maximum time period which can be extended under 37 C.F.R. § 1.136(a).

The Office cannot approve the request at this time since the reasons provided do not meet any of the conditions under the mandatory or permissive categories enumerated in 37 CFR 10.40. Section 10.40 of Title 37 of the Code of Federal Regulation states, "[a] practitioner shall not withdraw from employment in a proceeding before the Office without permission from the Office[.]" More specifically, 37 CFR 10.40 states, "[i]f paragraph (b) of this section is not applicable, a practitioner may not request permission to withdraw in matter pending before the Office unless such request or such withdrawal is" for one the permissive reasons listed in 37 CFR 10.40(c). The reasons set forth in the request, "assignee requested transfer of files" does not meet any of the conditions set forth in 37 CFR 10.40.

In order to request or take action in a patent matter, the assignee must establish its ownership of the patent to the satisfaction of the Director. In this regard, a Statement under 37 CFR 3.73(b) must have either: (i) documentary evidence of a chain of title from the original owner to the assignee (*e.g.*, copy of an executed assignment), and a statement affirming that the documentary evidence of the chain of title from the original owner to the assignee was or concurrently is being

submitted for recordation pursuant to § 3.11; or (ii) a statement specifying where documentary evidence of a chain of title from the original owner to the assignee is recorded in the assignment records of the Office (*e.g.*, reel and frame number). The power of attorney filed on August 18, 2006 does not include a proper chain of title. The Notice Regarding Change Of Power Of Attorney mailed August 25, 2006 is hereby **VACATED**.

All future communications from the Office will continue to be directed to the above-listed address until otherwise notified by applicant.

Telephone inquiries concerning this decision should be directed to Monica A. Graves at 571-272-7253.

for Denise Pothier
Petitions Examiner
Office of Petitions

cc: **KNOBBE MARTENS OLSON & BEAR LLP**
2040 Main Street 14th Floor
Irvine, CA 92614

UNITED STATES PATENT AND TRADEMARK OFFICE

Commissioner for Patents
United States Patent and Trademark Office
P.O. Box 1450
Alexandria, VA 22313-1450
www.uspto.gov

PHILIP C. LORENZO
227 BELLEVUE WAY NE
#459
BELLEVUE, WA 98004

COPY MAILED

FEB 21 2006

OFFICE OF PETITIONS

In re Application of :
Philip C. Lorenzo :
Application No. 10/931,856 : ON PETITION
Filed: September 1, 2004 :
Attorney Docket No.

This is a decision on the petition under 37 CFR 1.181(a) to withdraw the holding of abandonment, filed February 6, 2006.

The petition under 37 CFR 1.181(a) is **DISMISSED**.

The above-identified application became abandoned for failure to reply to the "Notice to File Corrected Application Papers" mailed November 1, 2004. The notice set a period for reply of two months from its mailing date. No response was received within the allowable period, and the application became abandoned on January 2, 2005. A Notice of Abandonment was mailed on January 25, 2006.

Petitioner maintains that the notice was never received at the address of 227 Bellevue Way NE, #459, Bellevue, Washington, and that the holding of abandonment should be withdrawn, accordingly. Petitioner acknowledges that the correspondence address petitioner provided at the time the subject application was filed was incorrect, but that a previous correspondence was received at 227 Bellevue Way, NE, #459 despite the correspondence having citing the incorrect address of 277 Bellevue Way, NE, #459.

A review of the application file and the Office computer records reveals that on November 1, 2004 (the date the notice was mailed), the address of record was cited as 277 Bellevue Way, NE, #459. No official request to have the correspondence address of record changed was filed until February 25, 2005.

Title 37 of the Code of Federal Regulations section 1.33(a) provides that:

> When filing an application, a correspondence address must be set forth in either an application data sheet (§ 1.76), or elsewhere, in a clearly identifiable manner, in any paper submitted with an application filing. If no correspondence address is specified, the Office may treat the mailing address of the first named inventor (if provided, *see* §§ 1.76(b)(1) and 1.63(c)(2)) as the correspondence address. The Office will direct all notices, official letters, and other communications relating to the application to the correspondence address.

The declaration under 37 CFR 1.63 filed with the application papers gave a correspondence address of 277 Bellevue Way, NE, #459. This was the address entered by the Office, and to which all subsequent correspondence was mailed. Petitioner's receipt of the correspondence at 227 Bellevue Way NE, #459, despite the correspondence being addressed otherwise was fortuitous, but should not have been relied upon by petitioner as representation that all other correspondence would also be routed there. Petitioner's efforts to have the correspondence address changed are noted, but are of little consequence relative to this petition because the efforts were not made until after the notice in question was mailed. Petitioner's argument that the "Notice to File Corrected Application Papers" was not received at 227 Bellevue Way NE, #459 are not unpersuasive as 227 Bellevue Way NE, #459 was not the address of record at the time the notice was mailed. The petition is dismissed, accordingly.

Petitioner may file a petition under 37 CFR 1.137(b) (enclosed) to revive the application. The fee for the petition is $1500.00 large entity or $750.00 for a small entity.

Further correspondence with respect to this matter should be addressed as follows:

By mail: Commissioner for Patents
United States Patent and Trademark Office
Box 1450
Alexandria, VA 22313-1450

By facsimile: (571) 273-8300
Attn: Office of Petitions

Telephone inquiries regarding this decision should be directed to the undersigned (571) 272-3222.

Kenya A. McLaughlin

Kenya A. McLaughlin
Petitions Attorney
Office of Petitions

Enclosure: Form PTO/SB/64

PTO/SB/64 (10-05)
Approved for use through 07/31/2006. OMB 0651-0031
U.S. Patent and Trademark Office; U.S. DEPARTMENT OF COMMERCE
Under the Paperwork Reduction Act of 1995, no persons are required to respond to a collection of information unless it displays a valid OMB control number.

PETITION FOR REVIVAL OF AN APPLICATION FOR PATENT ABANDONED UNINTENTIONALLY UNDER 37 CFR 1.137(b)

Docket Number (Optional)

First named inventor:

Application No.: Art Unit:

Filed: Examiner:

Title:

Attention: Office of Petitions
Mail Stop Petition
Commissioner for Patents
P.O. Box 1450
Alexandria, VA 22313-1450
FAX (571) 273-8300

NOTE: If information or assistance is needed in completing this form, please contact Petitions Information at (571) 272-3282.

The above-identified application became abandoned for failure to file a timely and proper reply to a notice or action by the United States Patent and Trademark Office. The date of abandonment is the day after the expiration date of the period set for reply in the office notice or action plus an extensions of time actually obtained.

APPLICANT HEREBY PETITIONS FOR REVIVAL OF THIS APPLICATION

NOTE: A grantable petition requires the following items:
(1) Petition fee;
(2) Reply and/or issue fee;
(3) Terminal disclaimer with disclaimer fee - required for all utility and plant applications filed before June 8, 1995; and for all design applications; and
(4) Statement that the entire delay was unintentional.

1. Petition fee

☐ Small entity-fee $ _____ (37 CFR 1.17(m)). Applicant claims small entity status. See 37 CFR 1.27.

☐ Other than small entity – fee $ _____ (37 CFR 1.17(m))

2. Reply and/or fee

A. The reply and/or fee to the above-noted Office action in the form of _____(identify type of reply):

☐ has been filed previously on _____.
☐ is enclosed herewith.

B. The issue fee and publication fee (if applicable) of $ _____.

☐ has been paid previously on _____.
☐ is enclosed herewith.

This collection of information is required by 37 CFR 1.137(b). The information is required to obtain or retain a benefit by the public which is to file (and by the USPTO to process) an application. Confidentiality is governed by 35 U.S.C. 122 and 37 CFR 1.11 and 1.14. This collection is estimated to take 1.0 hour to complete, including gathering, preparing, and submitting the completed application form to the USPTO. Time will vary depending upon the individual case. Any comments on the amount of time you require to complete this form and/or suggestions for reducing this burden, should be sent to the Chief Information Officer, U.S. Patent and Trademark Office, U.S. Department of Commerce, P.O. Box 1450, Alexandria, VA 22313-1450. DO NOT SEND FEES OR COMPLETED FORMS TO THIS ADDRESS. **SEND TO: Mail Stop Petition, Commissioner for Patents, P.O. Box 1450, Alexandria, VA 22313-1450.**

If you need assistance in completing the form, call 1-800-PTO-9199 and select option 2.

Under the Paperwork Reduction Act of 1995, no persons are required to respond to a collection of information unless it displays a valid OMB control number.

3. Terminal disclaimer with disclaimer fee

☐ Since this utility/plant application was filed on or after June 8, 1995, no terminal disclaimer is required.

☐ A terminal disclaimer (and disclaimer fee (37 CFR 1.20(d)) of $ _____ for a small entity or $ _____ for other than a small entity) disclaiming the required period of time is enclosed herewith (see PTO/SB/63).

4. STATEMENT: The entire delay in filing the required reply from the due date for the required reply until the filing of a grantable petition under 37 CFR 1.137(b) was unintentional. [NOTE: The United States Patent and Trademark Office may require additional information if there is a question as to whether either the abandonment or the delay in filing a petition under 37 CFR 1.137(b) was unintentional (MPEP 711.03(c), subsections (III)(C) and (D)).]

WARNING:

Petitioner/applicant is cautioned to avoid submitting personal information in documents filed in a patent application that may contribute to identity theft. Personal information such as social security numbers, bank account numbers, or credit card numbers (other than a check or credit card authorization form PTO-2038 submitted for payment purposes) is never required by the USPTO to support a petition or an application. If this type of personal information is included in documents submitted to the USPTO, petitioners/applicants should consider redacting such personal information from the documents before submitting them to the USPTO. Petitioner/applicant is advised that the record of a patent application is available to the public after publication of the application (unless a non-publication request in compliance with 37 CFR 1.213(a) is made in the application) or issuance of a patent. Furthermore, the record from an abandoned application may also be available to the public if the application is referenced in a published application or an issued patent (see 37 CFR 1.14). Checks and credit card authorization forms PTO-2038 submitted for payment purposes are not retained in the application file and therefore are not publicly available.

Signature	Date
Typed or printed name	Registration Number, if applicable
Address	Telephone Number
Address	

Enclosures: ☐ Fee Payment

☐ Reply

☐ Terminal Disclaimer Form

☐ Additional sheets containing statements establishing unintentional delay

☐ Other: _____

CERTIFICATE OF MAILING OR TRANSMISSION [37 CFR 1.8(a)]

I hereby certify that this correspondence is being:

☐ Deposited with the United States Postal Service on the date shown below with sufficient postage as first class mail in an envelope addressed to: Mail Stop Petition, Commissioner for Patents, P. O. Box 1450, Alexandria, VA 22313-1450.

☐ Transmitted by facsimile on the date shown below to the United States Patent and Trademark Office as (571) 273-8300.

Date	Signature
	Typed or printed name of person signing certificate

Privacy Act Statement

The **Privacy Act of 1974 (P.L. 93-579)** requires that you be given certain information in connection with your submission of the attached form related to a patent application or patent. Accordingly, pursuant to the requirements of the Act, please be advised that: (1) the general authority for the collection of this information is 35 U.S.C. 2(b)(2); (2) furnishing of the information solicited is voluntary; and (3) the principal purpose for which the information is used by the U.S. Patent and Trademark Office is to process and/or examine your submission related to a patent application or patent. If you do not furnish the requested information, the U.S. Patent and Trademark Office may not be able to process and/or examine your submission, which may result in termination of proceedings or abandonment of the application or expiration of the patent.

The information provided by you in this form will be subject to the following routine uses:

1. The information on this form will be treated confidentially to the extent allowed under the Freedom of Information Act (5 U.S.C. 552) and the Privacy Act (5 U.S.C 552a). Records from this system of records may be disclosed to the Department of Justice to determine whether disclosure of these records is required by the Freedom of Information Act.
2. A record from this system of records may be disclosed, as a routine use, in the course of presenting evidence to a court, magistrate, or administrative tribunal, including disclosures to opposing counsel in the course of settlement negotiations.
3. A record in this system of records may be disclosed, as a routine use, to a Member of Congress submitting a request involving an individual, to whom the record pertains, when the individual has requested assistance from the Member with respect to the subject matter of the record.
4. A record in this system of records may be disclosed, as a routine use, to a contractor of the Agency having need for the information in order to perform a contract. Recipients of information shall be required to comply with the requirements of the Privacy Act of 1974, as amended, pursuant to 5 U.S.C. 552a(m).
5. A record related to an International Application filed under the Patent Cooperation Treaty in this system of records may be disclosed, as a routine use, to the International Bureau of the World Intellectual Property Organization, pursuant to the Patent Cooperation Treaty.
6. A record in this system of records may be disclosed, as a routine use, to another federal agency for purposes of National Security review (35 U.S.C. 181) and for review pursuant to the Atomic Energy Act (42 U.S.C. 218(c)).
7. A record from this system of records may be disclosed, as a routine use, to the Administrator, General Services, or his/her designee, during an inspection of records conducted by GSA as part of that agency's responsibility to recommend improvements in records management practices and programs, under authority of 44 U.S.C. 2904 and 2906. Such disclosure shall be made in accordance with the GSA regulations governing inspection of records for this purpose, and any other relevant (*i.e.*, GSA or Commerce) directive. Such disclosure shall not be used to make determinations about individuals.
8. A record from this system of records may be disclosed, as a routine use, to the public after either publication of the application pursuant to 35 U.S.C. 122(b) or issuance of a patent pursuant to 35 U.S.C. 151. Further, a record may be disclosed, subject to the limitations of 37 CFR 1.14, as a routine use, to the public if the record was filed in an application which became abandoned or in which the proceedings were terminated and which application is referenced by either a published application, an application open to public inspection or an issued patent.
9. A record from this system of records may be disclosed, as a routine use, to a Federal, State, or local law enforcement agency, if the USPTO becomes aware of a violation or potential violation of law or regulation.

UNITED STATES PATENT AND TRADEMARK OFFICE

Commissioner for Patents
United States Patent and Trademark Office
P.O. Box 1450
Alexandria, VA 22313-1450
www.uspto.gov

PHILIP C. LORENZO
227 BELLEVUE WAY NE
#459
BELLEVUE, WA 98004

COPY MAILED

JUN 09 2006

OFFICE OF PETITIONS

In re Application of :
Philip C. Lorenzo :
Application No. 10/931,856 : ON PETITION
Filed: September 1, 2004 :
Attorney Docket No.

This is a decision on the petition under 37 CFR 1.137(b), filed May 19, 2006.

The petition under 37 CFR 1.137(b) is GRANTED.

The above-identified application became abandoned for failure to reply to the "Notice to File Corrected Application Papers" mailed November 1, 2004. The notice set a period for reply of two months from its mailing date. No response was received within the allowable period, and the application became abandoned on January 2, 2005. A Notice of Abandonment was mailed on January 25, 2006.

The response to the Notice to File Corrected Application Papers, filed February 6, 2006, is noted.

This application is being forwarded to the Office of Initial Patent Examination for further processing.

Telephone inquiries regarding this decision should be directed to the undersigned at (571) 272-3222.

Kenya A. McLaughlin
Petitions Attorney
Office of Petitions

UNITED STATES PATENT AND TRADEMARK OFFICE

UNITED STATES DEPARTMENT OF COMMERCE
United States Patent and Trademark Office
Address: COMMISSIONER FOR PATENTS
P.O. Box 1450
Alexandria, Virginia 22313-1450
www.uspto.gov

KENYON & KENYON LLP
1500 K STREET N.W.
WASHINGTON, DC 20005

Mail Date: 04/21/2010

Applicant	: Udo Klein	: DECISION ON REQUEST FOR
Patent Number	: 7634741	: RECALCULATION of PATENT
Issue Date	: 12/15/2009	: TERM ADJUSTMENT IN VIEW
Appliction No	: 10/931,878	: OF WYETH AND NOTICE OF INTENT TO
Filed	: 08/31/2004	: ISSUE CERTIFICATE OF CORRECTION
		:

The Request for Recalculation is **GRANTED** to the extent indicated.

The patent term adjustment has been determined to be **767** days. The USPTO will *sua sponte* issue a certificate of correction reflecting the amount of PTA days determined by the recalculation.

Prior to the issuance of the certificate of correction, the USPTO will afford patentee an opportunity to be heard and request reconsideration. Accordingly, patentee has **one month or thirty (30) days**, whichever is longer, to file a request for reconsideration of this patent term adjustment calculation. See 35 U.S.C. 154(b)(3)(B)(ii) and 37 CFR 1.322(a)(4). No extensions of time will be granted under 37 CFR 1.136.

Patentee should use document code PET.OP if electronically filing a request for reconsideration of this patent term adjustment calculation. The patentee must also include the information required by 37 CFR 1.705(b)(2) and the fee required by 37 CFR 1.18(e). If patentee does not file a timely request for reconsideration of this patent term adjustment calculation including the information required by 37 CFR 1.705(b)(2) and the fee required by 37 CFR 1.18(e), the USPTO will issue a certificate of correction reflecting the PTA determination noted above.

Patentee should be aware that in order to preserve the right to review in the United States District Court for the District of Columbia of the USPTO patent term adjustment determination, patentee must ensure that he or she also take the steps required under 35 U.S.C. 154(b)(4)(A) in a timely manner. Nothing in the request for recalculation should be construed as providing an alternative time frame for commencing a civil action under 35 U.S.C. 154(b)(4)(A).

Any questions concerning this decision should be directed to the Office of Patent Legal Administration at 571-272-7702.

UNITED STATES PATENT AND TRADEMARK OFFICE

Commissioner for Patents
United States Patent and Trademark Office
P.O. Box 1450
Alexandria, VA 22313-1450
www.uspto.gov

FISH & NEAVE IP GROUP
ROPES & GRAY LLP
ONE INTERNATIONAL PLACE
BOSTON MA 02110-2624

COPY MAILED
MAY 0 4 2006
OFFICE OF PETITIONS

In re Application of	:	
Hagood et al.	:	DECISION ON PETITION
Application No. 10/931,879	:	TO WITHDRAW
Filed: August 31, 2004	:	FROM RECORD
Attorney Docket No. CTPH-P04-001	:	

This is a decision on the Request to Withdraw as attorney or agent of record under 37 C.F.R. § 1.36(b), filed August 4, 2005.

The request is **APPROVED**.

A grantable request to withdraw as attorney/agent of record must be signed by every attorney/agent seeking to withdraw or contain a clear indication that one attorney is signing on behalf of another/others. A request to withdraw will not be approved unless at least 30 (thirty) days would remain between the date of approval and the later of the expiration date of a time to file a response or the expiration date of the maximum time period which can be extended under 37 C.F.R. § 1.136(a).

The request was signed by John V. Bianco on behalf of all attorneys of record who are associated with Customer Number 28120.

All attorneys/agents associated with Customer Number 28120 have been withdrawn.

A Power of Attorney was submitted March 24, 2006. However, it was not acceptable, as a Statement under 37 CFR 3.73(b) was not provided. 37 CFR 3.73(b) provides that: (1) when an assignee seeks to take action in a matter before the Office, the assignee must establish its ownership of the property to the satisfaction of the Commissioner; (2) ownership is established by submitting to the Office, in the Office file related to the matter in which action is sought to be taken, documentary evidence of a chain of title from the original owner to the assignee (*e.g.*, copy of an executed assignment submitted for recording) or by specifying (*e.g.*, reel and frame number) where such evidence is recorded in the Office; (3) the submission establishing ownership must be signed by a party authorized to act on behalf of the assignee; and (4) documents submitted to establish ownership may be required to be recorded as a condition to permitting the assignee to take action in a matter pending before the Office.

The request to change the correspondence of record is not acceptable as the requested correspondence address is not that of: (1) the first named inventor; or (2) the assignee of the entire interest. All future communications from the Office will continue to be directed to the assignee of the entire interest at the below-listed address until otherwise properly notified by the applicant.

There is an outstanding Office action mailed April 7, 2006 that requires a reply.

Telephone inquires concerning this decision should be directed to Petitions Examiner Liana Chase at (571) 272-3206. All other inquires concerning either the examination or status of the application should be directed to the Technology Center.

David Bucci
Petitions Examiner
Office of Petitions

Cc:

CONTINUUM PHOTONICS, INC.
5 FORTUNE DRIVE
BILLERICA, MA 01821

HAMILTON, BROOK, SMITH & REYNOLDS, P.C.
530 VIRGINIA ROAD, P.O. BOX 9133
CONCORD, MA 01742-9133

RECEIVED
CENTRAL FAX CENTER
MAR 2 4 2006

HAMILTON, BROOK, SMITH & REYNOLDS, P.C.

POWER OF ATTORNEY and CORRESPONDENCE ADDRESS INDICATION FORM

Application Number	10/931,879
Filing Date	August 31, 2004
First Named Inventor	Nesbitt W. Hagood
Confirmation Number	1365
Group Art Unit	2874
Examiner Name	Connelly Cushwa, M
Attorney Docket Number	3525 1010-002

Title Beam-Steering Optical Switching Apparatus

I hereby appoint

[X] Practitioners associated with **Customer No. 021005**

[ ] Practitioner(s) named below:

as my/our attorneys/agents to prosecute the application identified above, including any continuation or divisional applications thereof, and to transact all business in the United States Patent and Trademark Office connected therewith.

Please recognize or change the correspondence address for the above-identified application to:

[X] Customer Number 021005
Hamilton, Brook, Smith & Reynolds, P.C
530 Virginia Road
P.O. Box 9133
Concord, Massachusetts 01742-9133

[ ] Other _____

Please direct all telephone calls and facsimiles to:

Name Mark B. Solomon Tel No. 978-341-0036 Fax No 978-341-0136

I am the:

[ ] Applicant/Inventor.

[X] Authorized representative of the Assignee, Continuum Photonics, Inc., of the entire interest See 37 C F R. § 3.71 A Statement under 37 C.F.R. §3 73(b) is enclosed.

[ ] Authorized representative of the Assignee, [ ], together with [ ], of the entire interest. A Statement under 37 C F R § 3.73(b) is enclosed

SIGNATURE of Applicant or Assignee of Record

Signature	K. Ghandi
Name & Title	Dr. Kasyap Ghandi V.P. R&D
Date	3/24/06

PAGE 12/16 * RCVD AT 3/24/2006 4:19:10 PM [Eastern Standard Time] * SVR:USPTO-EFXRF-5/9 * DNIS:2738300 * CSID:1978 341 0136 * DURATION (mm-ss):05-22

BEST AVAILABLE COPY

Docket No. 3525.1010-002

STATEMENT UNDER 37 CFR § 3.73(b)

Applicant/Patentee: Nesbitt W. Hagood, Kamyar Ghandi, Robert P. Clouther and Mike Borgen

Application No./Patent No.: 10/931,879 Filed/Issue Date: August 31, 2004

Entitled: Beam-Steering Optical Switching Apparatus

Continuum Photonics, Inc., a corporation
(Name of Assignee) (Type of Assignee, e.g., corporation, partnership, university, government agency, etc.)

states that it is

A. [X] the assignee of the entire right, title and interest in the patent application/patent identified above; or

B. [ ] an assignee together with [ ] of the entire right, title and interest in the patent application/patent identified above.

The right, title and interest of the above-named assignee in the patent application/patent identified above is established by virtue of:

A. [X] An assignment from the inventor(s) of the patent application/patent identified above. The assignment was recorded in the Patent and Trademark Office at Reel _____, Frame _____, or a copy thereof is attached.

OR

B [ ] A chain of title from the inventor(s) of the patent application/patent identified above, to the current assignee as shown below:

1. From: _____ To: _____
The document was recorded in the United States Patent and Trademark Office at Reel _____, Frame _____, or a copy thereof is attached.

2. From: _____ To: _____
The document was recorded in the United States Patent and Trademark Office at Reel _____, Frame _____, or a copy thereof is attached.

3 From: _____ To: _____
The document was recorded in the United States Patent and Trademark Office at Reel _____, Frame _____, or a copy thereof is attached.

[ ] Additional documents in the chain of title are listed on a supplemental sheet

As required by 37 CFR 3.73(b)(1)(i), the documentary evidence of the chain of title from the original owner to the assignee was, or concurrently is being, submitted for recordation pursuant to 37 CFR 3.11.

The undersigned (whose title is supplied below) is authorized to act on behalf of the assignee.

Signature: K. Ghandi

Name: Dr. Kamyar Ghandi

Title: V.P. R&D

Date: 3/24/06

PAGE 13/16 * RCVD AT 3/24/2006 4:19:10 PM [Eastern Standard Time] * SVR:USPTO-EFXRF-5/9 * DNIS:2738300 * CSID:1978 341 0136 * DURATION (mm-ss):05-22

COPY

ASSIGNMENT

WHEREAS, each of the Undersigned has developed certain inventions described in U.S. patent application titled:

BEAM-STEERING OPTICAL SWITCHING APPARATUS

filed herewith date_____, U.S. Application No._____; and has full right to convey their entire interest, both legal and equitable, in and to said inventions free from all prior assignments, agreements, licenses, mortgages, security interests, or other encumbrances whatsoever; and

WHEREAS, **Continuum Photonics**, ("ASSIGNEE"), a company having executive offices at **45 Manning Road, Billerica, MA 01821**, is desirous of acquiring the entire right, title and interest in and to said invention or inventions and any and all patents to be obtained therefor;

NOW, THEREFORE, in consideration of the sum of One Dollar ($1.00) and other good and valuable consideration, the receipt and sufficiency of which are hereby acknowledged by each of the Undersigned, each of the Undersigned hereby sells, assigns and transfers unto said ASSIGNEE, its successors and assigns, their entire right, title and interest in and to said invention or inventions, as described in the aforesaid application and all applications resulting therefrom, including any and all divisions, continuations, continuations in part, substitute applications, and reissues or extensions thereof; and all resulting patents.

AND each of the Undersigned hereby authorizes and requests the issuing authority to issue any and all patents on said application or applications to said ASSIGNEE or its successors and assigns; the Undersigned agree(s) that the agent of record in said application shall hereinafter act on behalf of said ASSIGNEE.

AND, each of the Undersigned further agrees, without any further payment or compensation by said ASSIGNEE or its successors and assigns, to communicate to said ASSIGNEE, its representatives or agents or its successors and assigns, any facts relating to said invention or inventions including evidence for interference purposes or for other legal proceedings whenever requested; to testify in any interference or other legal proceedings, whenever requested; to execute and deliver, on request, all lawful papers required to make any of the foregoing provisions effective; and to generally do everything possible to aid said ASSIGNEE, its successors or assigns and nominees to secure, obtain and enforce proper patent protection for said invention or inventions in this or any foreign country.

8854644

PAGE 14/16 * RCVD AT 3/24/2006 4:19:10 PM [Eastern Standard Time] * SVR:USPTO-EFXRF-5/9 * DNIS:2738300 * CSID:1978 341 0136 * DURATION (mm-ss):05-22

RECEIVED
CENTRAL FAX CENTER

AUG 0 4 2005

PTO/SB/63 (04-05)
Approved for use through 11/30/2005. OMB 0651-0035
U.S. Patent and Trademark Office; U.S. DEPARTMENT OF COMMERCE
Under the Paperwork Reduction Act of 1995, no persons are required to respond to a collection of information unless it displays a valid OMB control number.

REQUEST FOR WITHDRAWAL AS ATTORNEY OR AGENT AND CHANGE OF CORRESPONDENCE ADDRESS		
	Application Number	10/931,879
	Filing Date	August 31, 2004
	First Named Inventor	Nesbitt W. Hagood
	Art Unit	2874
	Examiner Name	C. M. R. Connelly
	Attorney Docket Number	CTPH-P04-001

To: Commissioner for Patents
P.O. Box 1450
Alexandria, VA 22313-1450

Please withdraw me as attorney or agent for the above identified patent application, and

- [ ] all the attorneys/agents of record.
- [ ] the attorneys/agents (with registration numbers) listed on the attached paper(s), or
- [x] the attorneys/agents associated with Customer Number 28120

NOTE: This box can only be checked when the power of attorney of record in the application is to all the practitioners associated with a customer number.

The reasons for this request are:

Client requested the application to be transferred to Hamilton Brook Smith & Reynolds, 530 Virginia Road, Concord, MA 01742.

CORRESPONDENCE ADDRESS

1. [ ] The correspondence address is NOT affected by this withdrawal.
2. [x] Change the correspondence address and direct all future correspondence to: Hamilton Brook Smith & Reynolds, 530 Virginia Road, Concord, MA 01742.

[ ] The address associated with Customer Number:

OR

[ ] Firm or Individual Name	Ropes & Gray LLP				
Address	One International Place				
City	Boston	State	MA	Zip	02110-2624
Country	US				
Telephone	(617) 951-7000	Email			
Signature					
Name	John V. Bianco		Registration No.		36,748
Date	August 4, 2005		Telephone No.		(617) 951-7665

NOTE: Withdrawal is effective when approved rather than when received. Unless there are at least 30 days between approval of withdrawal and the expiration date of a time period for response or possible extension period, the request to withdraw is normally disapproved.

I hereby certify that this correspondence is being facsimile transmitted to the Patent and Trademark Office; facsimile no. (571) 273-8300, on the date shown below.

Dated: 08/04/05 Signature: Joanne Ryan (Joanne Ryan)

UNITED STATES PATENT AND TRADEMARK OFFICE

Commissioner for Patents
United States Patent and Trademark Office
P.O. Box 1450
Alexandria, VA 22313-1450
www.uspto.gov
DIW Dec-07

WORKMAN NYDEGGER
60 EAST SOUTH TEMPLE
1000 EAGLE GATE TOWER
SALT LAKE CITY UT 84111

COPY MAILED

DEC 14 2007

OFFICE OF PETITIONS

In re Application of	:	
George Quinton Lyon	:	DECISION ON PETITION TO
Application Number: 10/931897	:	WITHDRAW HOLDING OF
Filing Date: 09/01/2004	:	ABANDONMENT
Attorney Docket Number:	:	
15636.15	:	

This is a decision on reference to the "PETITION UNDER 37 C.F.R. § 1.181(a) TO WITHDRAW HOLDING OF ABANDONMENT," filed on May 16, 2007.

The petition is **GRANTED**.

The application was held abandoned for failure to timely respond to the Notice to File Missing Parts of Nonprovisional Application mailed on October 29, 2004, which set a two (2) month shortened period for reply. Notice of Abandonment was mailed on April 19, 2007.

Petitioner asserts that a proper and timely reply to the Notice was filed on November 4, 2004. A copy of the reply has been provided with the subject petition.

A review of the record reveals that a timely reply, including an oath or declaration pursuant to 37 CFR 1.63 and the surcharge for its late filing, were filed on November 4, 2004, and are located in the Office's Image File Wrapper system.

As such, the papers filed on November 4, 2004, constituted a complete and timely response to the Notice mailed on October 29, 2004.

Therefore, the showing of record is that a response was timely filed, and there is no abandonment in fact.

The holding of abandonment is withdrawn, and the Notice of Abandonment is vacated.

The Office apologizes for any inconvenience to petitioner.

The application will be referred to the Office of Patent Application Processing for further processing.

Telephone inquiries concerning this matter may be directed to the undersigned at (571)272-3231.

D Wood

Douglas I. Wood
Senior Petitions Attorney
Office of Petitions

UNITED STATES PATENT AND TRADEMARK OFFICE

Commissioner for Patents
United States Patent and Trademark Office
P.O. Box 1450
Alexandria, VA 22313-1450
www.uspto.gov

DUANE MORRIS LLP
IP DEPARTMENT (AGERE)
30 SOUTH 17TH STREET
PHILADELPHIA PA 19103-4196

COPY MAILED

OCT 12 2007

OFFICE OF PETITIONS

In re Application of :
Seier :
Application No. 10/931,902 : ON PETITION
Filed: September 1, 2004 :
Attorney Docket No. Seier 1/075903-305 :
For: ADVISORY ALERT OF LOW SIGNAL STRENGTH FOR CELL PHONE USER

This is a decision on the petition under 37 CFR 1.137(b), filed on July 23, 2007, to revive the above-identified application.

The petition under 37 CFR 1.137(b) is **GRANTED**.

This application became abandoned for failure to timely and properly respond to the final Office action mailed September 20, 2006, which set an extendable three month period for reply. No extensions of time under 37 CFR 1.136(a) being obtained and no reply being filed, this application became abandoned on December 21, 2006.

Applicant has submitted a RCE and required $790.00 fee and amendment in reply to the September 20, 2006 final Office action, an acceptable statement of the unintentional nature of the delay in responding to the September 20, 2006 final Office action, and the $1,500.00 petition fee. Therefore, the petition is granted.

Regarding the statement of delay: The statement of unintentional delay was not signed by a person who would have been in a position of knowing that the delay in filing a timely response was unintentional. In the event that practitioner has no knowledge that the delay was in fact unintentional, practitioner should make a reasonable inquiry to ascertain that, in fact, the delay was unintentional. If practitioner discovers that the delay was intentional, practitioner must so notify the Office.

Pursuant to 37 CFR 1.136, an extension of time must be filed prior to the expiration of the maximum period obtainable for reply to avoid abandonment. Accordingly, since the $1,020.00 extension of time submitted with the petition on July 23, 2007 was submitted subsequent to the

expiration of the maximum period obtainable for reply, this fee is unnecessary and will be credited to petitioner's deposit account.

After the mailing of this decision the application will be forwarded to Technology Center AU 2617 for consideration of the RCE and amendment filed on July 23, 2007.

Telephone inquiries pertaining to this decision may be directed to the undersigned at (571) 272-3230.

Shirene Willis Brantley

Shirene Willis Brantley
Senior Petitions Attorney
Office of Petitions